STATE LIBRARY OF PENNSYLVANIA
3 0144 00336959 2

CLASS 540.5 BOOK J82511

VOLUME 9
(1937)

PENNSYLVANIA
STATE LIBRARY

Digitized by the Internet Archive
in 2019 with funding from
This project is made possible by a grant from the Institute of Museum and Library Services as administered by the Pennsylvania Department of Education through the Office of Commonwealth Libraries

https://archive.org/details/vol9industrialen00unse

INDUSTRIAL
AND ENGINEERING
CHEMISTRY

ANALYTICAL EDITION

PUBLISHED BY THE
American Chemical Society

VOLUME 9, 1937

Editor: H. E. HOWE

Assistant to Editor: N. A. PARKINSON

Manuscript Editor: G. G. GORDON

Make-up Editor: BERTHA REYNOLDS

Contributing Editor: D. H. KILLEFFER

Advisory Board

B. L. CLARKE
T. R. CUNNINGHAM
N. H. FURMAN
I. M. KOLTHOFF
G. E. F. LUNDELL
H. H. WILLARD

MACK PRINTING COMPANY
EASTON, PA.
1937

ANALYTICAL EDITION

INDUSTRIAL and ENGINEERING CHEMISTRY

Harrison E. Howe, Editor

Improved Service to Analysts

THE ANALYTICAL EDITION of INDUSTRIAL AND ENGINEERING CHEMISTRY has completed eight volumes and has developed its service to the point where its position in the field of chemical literature is unquestioned and is to be envied. Those who are served by this edition will be pleased with the action taken by the Board of Directors of the AMERICAN CHEMICAL SOCIETY, by which they will be enabled, beginning with this issue, to have their new analytical methods and procedures, including physical testing and new apparatus, in a monthly instead of a bimonthly edition.

Microchemistry will receive special recognition, the papers in that specialty being set aside as a separate section in each issue for which there are papers available, and this will be done without diminishing the number of pages available for papers in other fields of analysis.

We are fortunate in having the services of the Board of Advisory Editors set up in 1935 and shall rely extensively upon their guidance in the further developments of our ANALYTICAL EDITION.

Note to Authors

IN THE preparation of manuscripts authors should address themselves to specialists in their particular fields, rather than to the general reader. If the article describes a new method, the author should endeavor to tell the complete story, so that the reader will not have to wait for succeeding contributions or duplicate the unpublished tests in order to find out whether he can apply the method in his own work.

The following is suggested as a general outline to be followed in preparing analytical methods for this edition:

1. Preliminary statement or introduction, in which the need for the method should be stated, brief reference to other methods or literature given, etc.
2. Experimental:
   - Outline of proposed method
   - Description of apparatus and reagents
   - Procedure
   - Data:
     - Interfering substances or conditions
     - Concentration range through which the method is applicable
     - Accuracy of the method
     - Precision of the method
3. Discussion and summary

The author should state at the outset what the original features of the paper are. If it deals with a method of analysis, he should give some comparison with established methods in point of speed, applicability, accuracy, and cost. Extensive reviews of the literature should not be given and such references as are cited should be carefully checked. Incorrect references are inexcusable and cast doubts on the author's reliability. The theoretical considerations on which the method is based should be clearly set forth.

In the experimental part, previously published or well-known procedures which have been followed should only be designated or references given to them. If, however, the method is new, the data upon which it is based should be presented but in no greater detail than is necessary to prove its soundness. New procedures should be clearly described, that readers can easily duplicate the work. Loose directions should be avoided, unless the author knows that no possible harm can result from the most liberal interpretation that can be made of such expressions as "to the faintly acid solution," "wash the precipitate," "ignite," etc. If new or uncommon reagents are needed, the author should state their probable cost, where they can be purchased if rare, or how they can be prepared, if not on the market.

The author should distinguish carefully between precision and accuracy. Briefly but somewhat roughly stated, accuracy is a measure of degree of correctness; precision is a measure of reproducibility. The precision of a result does not necessarily have anything to do with its accuracy; it serves merely as a measure of the duplicability of the procedure in the hands of a given operator. No claim for accuracy should be made unless the author believes that he has satisfactorily established the correct result.

The author should be frank and define the limitations of the method. Tests dealing with the effects of foreign compounds should be made on mixtures in which the ratios of the compounds sought to the foreign compounds are varied and simulate conditions that are likely to be encountered in practice. If the author has made no such tests, he should state that he has no knowledge of the effects of foreign substances. It is desirable that possible applications of methods should be stated.

A summary or prefatory abstract should acquaint the reader with the main points of the article. This should give concisely where possible the substances determined, nature of material to which determination is applicable, interfering substances, range of concentration to which method is applicable, whether or not a sensible constant error is involved—that is, the accuracy of the method—and its precision. Either the summary or the prefatory abstract is so often used by abstractors that the author may well spend considerable time in their preparation, in order to be certain that proper emphasis is given to the main features of the contribution.

Our "Suggestions to Authors" is available to those unfamiliar with the form of manuscript and illustrations preferred by INDUSTRIAL AND ENGINEERING CHEMISTRY.

Standard Methods for the Sampling and Analysis of Commercial Soaps and Soap Products, Revised

F. W. SMITHER, R. E. DIVINE, C. P. LONG, M. L. SHEELY, H. P. TREVITHICK, AND P. H. WALKER
Committee on Analysis of Soaps and Soap Products of the American Chemical Society

THE Committee on Analysis of Soaps and Soap Products of the AMERICAN CHEMICAL SOCIETY, appointed in 1935, has given careful consideration to criticisms of the methods published in 1922 (*6*), and to the coöperative studies carried out by the Soap Analysis Committee of the American Oil Chemists' Society (*14*), with the result that the following report was unanimously adopted October 31, 1935.

A. Sampling

The seller shall have the option of being represented at the time of sampling, and when he so requests shall be furnished with a duplicate sample.

I. CAKE SOAPS, FLAKE AND POWDERED SOAP PRODUCTS WHEN PACKED IN CANS OR CARTONS. One cake (can or carton) shall be taken at random from not less than 1 per cent of the vendors' shipping containers, provided such containers contain not less than 50 pounds (22.7 kg.). In the case of smaller containers, a cake (can or carton) shall be taken at random from each lot of containers totaling not more than 5000 pounds (2270 kg.). The total sample shall in all cases consist of not less than three cakes (cans or cartons) taken at random from separate containers. With very large lots where the sample drawn as above will amount to more than 20 pounds (9 kg.), the percentage of packages sampled shall be reduced so that the amount drawn shall not exceed 20 pounds (9 kg.).

Wrap the individual cakes (cans or cartons) tightly in paraffined paper at once and seal by rubbing the edges with a heated iron. The inspector shall accurately weigh each wrapped cake (can or carton), record its weight and the date of weighing on the wrapper, place the wrapped cakes (cans or cartons) in an air-tight container, which should be nearly filled, and seal, mark, and send to the laboratory for test. Samples should be kept cool until tested.

II. FLAKE AND POWDERED SOAP PRODUCTS WHEN IN BULK. A grab sample of not less than 0.5 pound (227 grams) shall be taken at random from not less than 1 per cent of the vendors' shipping containers, provided such containers contain not less than 100 pounds (45 kg.). In case of smaller containers, a grab sample of not less than 0.5 pound (227 grams) shall be taken at random from each lot of containers totaling not more than 10,000 pounds (4540 kg.). The total samples shall in all cases consist of not less than three grab portions taken at random from separate containers. With very large lots where the sample drawn as above will amount to more than 20 pounds (9 kg.), the percentage of packages sampled shall be reduced so that the amount drawn shall not exceed 20 pounds (9 kg.). The inspector shall rapidly mix the sample, place in an air-tight container, which shall be filled, and seal, mark, accurately weigh, record its weight and date of weighing on the package, and send to the laboratory for test. Samples should be kept cool until tested.

III. LIQUID SOAP. A sample of not less than 0.5 pint (236.6 cc.) shall be taken at random from not less than 1 per cent of the vendors' shipping containers, provided such containers contain not less than 10 gallons (almost 38 liters) each. In case of smaller containers, a sample of not less than 0.5 pint (236.6 cc.) shall be taken at random from each lot of containers totaling not more than 1000 gallons (37,853 liters). The total sample shall in all cases consist of not less than three portions of 0.5 pint (236.6 cc.) each taken at random from separate containers. Before drawing the sample from the container selected, the contents of the container shall be thoroughly agitated. The inspector shall thoroughly mix the samples drawn, place in clean, dry cans or bottles, which shall be completely filled and securely stoppered with clean corks or caps; seal, mark, and send to the laboratory for test.

IV. PASTE SOAP PRODUCTS. (1) *When packed in cans or cartons of 5 pounds (2.27 kg.) or less.* One can or carton shall be taken at random from not less than 1 per cent of the vendors' shipping containers, provided such containers contain not less than 50 pounds (22.7 kg.). In case of smaller containers, a can or carton shall be taken at random from each lot of containers, totaling not more than 5000 pounds (2270 kg.). The total sample shall in all cases consist of not less than 3 cans or cartons taken at random from separate containers. With very large lots where the sample drawn as above will amount to more than 20 pounds (9 kg.), the percentage of packages sampled shall be reduced so that the amount drawn shall not exceed 20 pounds (9 kg.). Wrap, seal, mark, and send to laboratory for test.

(2) *When packed in bulk.* Take a trial sample at random of not less than 0.5 pound (227 grams) from not less than 1 per cent of the vendors' shipping containers, provided such containers contain not less than 50 pounds (22.7 kg.). In case of smaller containers a trial sample shall be taken at random from each lot of containers totaling not more than 5000 pounds (2270 kg.). The total sample shall in all cases consist of not less than 3 half-pound (227-gram) portions taken at random from separate containers. With very large lots where the sample drawn as above will amount to more than 10 pounds (4.5 kg.), the percentage of packages sampled shall be reduced so that the amount drawn shall not exceed 10 pounds (4.5 kg.). The inspector shall promptly place the combined sample in a clean, dry, air- and water-tight container, which shall be filled, and seal, mark, and send to the laboratory for test.

B. Preparation of Samples

I. CAKE SOAP. In case of samples that can be easily disintegrated and mixed, run the entire sample through a suitable chopper. When the sample is large, each cake may be quartered and one-quarter of each cake run through the chopper. With samples that cannot be handled as above, select a cake of average weight, quarter it by cutting at right angles in the center, and shave equally from all freshly cut surfaces sufficient soap for analysis. Mix and weigh out all portions for analysis promptly. Preserve the remainder in an air-tight container in a cool place.

II. POWDERED AND CHIP SOAPS. Rapidly disintegrate and mix the sample; if desired, quarter down to about 1 pound (453.6 grams) and weigh out all portions for analysis at once. Unused portions of the sample for analysis shall be preserved in an air-tight container in a cool place.

III. LIQUID SOAP. No preparation of the sample, other than thorough mixing, is necessary unless it is received during very cold weather, when it should be allowed to stand at least 1 hour after it has warmed up to room temperature (20° to 30° C.) before it is noted whether it forms a satisfactory lather.

IV. Paste Soap Products. Mix thoroughly by kneading and quarter down to about 1 pound (453.6 grams). Weigh out all portions for analysis promptly and preserve remainder in an air-tight container in a cool place.

C. Methods of Analysis

When a determination shows nonconformity with the specifications, a duplicate shall be run.

I. Moisture. The oven method given below is generally applicable to all soaps. Experience has shown, however, that certain exceptions to this method must be made if accurate results are desired. These exceptions include: (a) For soaps containing appreciable amounts of sodium silicate the distillation method is preferred. (b) Soaps of linseed and other oxidizing oils absorb oxygen and if the oven method is used may gain in weight near the end of the test. Therefore, either an inert atmosphere or vacuum oven should be used. The distillation method is also applicable to these types of soaps.

(1) *Matter volatile at 105° C. (oven method).* Weigh 5 grams (±0.01 gram) of the sample in a porcelain or glass dish about 6 to 8 cm. in diameter and about 2 to 4 cm. deep, and dry to constant weight in an air oven at a temperature of 105° ± 2° C.

(2) *Distillation method (7).* For soaps containing from 5 to 25 per cent of moisture and volatile matter use a 20-gram (±0.04 gram) sample. For soaps containing more than 25 per cent moisture and volatile matter use a 10-gram (±0.02 gram) sample. The weighed sample is carefully transferred to a 500-cc. short-necked round-bottomed flask or an Erlenmeyer flask. Add approximately 10 grams of anhydrous, fused sodium acetate to prevent violent frothing, and then follow with 100 cc. of xylol which has previously been saturated with water by shaking the xylol with a small quantity of water and distilling. Use the xylol distillate for the determination. Attach the flask to a graduated 5- or 6-cc. distilling tube receiver, calibrated at 25° C., such as the Bidwell-Sterling or Stark and Dean apparatus, which is connected to a 48-cm. reflux condenser (19-inch Liebig condenser). Prior to starting the determination, fill the receiver with saturated xylol by pouring in through the reflux condenser.

So that the refluxing will be under better control, wrap the flask and the tube leading to the receiver with asbestos cloth. Apply heat to the flask by means of a gas burner or an electric heater and distill slowly. The rate at the start should be approximately 100 drops per minute. When the greater part of the water has apparently distilled over, increase the distillation rate to 200 drops per minute until no more water is collected. Purge the reflux condenser during the distillation with 5-cc. portions of xylol to wash down any moisture adhering to the walls of the condenser. The water in the receiver may be made to separate from the xylol by using a spiral copper wire. Move the wire up and down in the condenser occasionally, thus causing the water to settle to the bottom of the receiver. Reflux for at least two hours, after which the heat is turned off. Adjust the temperature of the distillate to 25° C. Read the volume of water and calculate the percentage of moisture in the soap, as follows:

$$\frac{\text{Volume in cc. at 25° C.} \times 0.997}{\text{Weight of sample}} \times 100 = \%\ \text{moisture in soap}$$

II. Total Matter Insoluble in Alcohol. Free Alkali or Free Acid. (1) *Matter insoluble in alcohol.* Digest a 2- to 10-gram (±0.01 gram) sample with 200 cc. of freshly boiled ethyl alcohol (94 per cent or higher and neutral to phenolphthalein) in a covered vessel on a steam bath until the soap is dissolved. Filter through a counterpoised filter paper neutral to phenolphthalein, or a weighed Gooch crucible with suction, protecting the solution from carbon dioxide and other acid fumes during the operation. Wash the residue on the paper, or in the crucible, with hot neutral alcohol until free from soap and reserve the filtrate and washings. Dry the filter paper or crucible with residue at 100° to 105° C. for 3 hours, cool, and weigh the total matter insoluble in alcohol. [The matter insoluble in alcohol will contain most of the alkaline salts, such as carbonates, borates, silicates, phosphates, and sulfates, as well as starch, and may be used for the approximate determination of these constituents. These salts are not entirely insoluble in alcohol, so for accurate determinations separate portions of the soap should be used. For determination of carbonates see C-XI; phosphates, C-XII; sulfates, C-XIII; silicates, C-X; borax, C-IX; starch, C-XIV (4).]

(2) *Free alkali or free acid.* Heat the reserved filtrate to incipient boiling and titrate with standard acid or alkali solution, using phenolphthalein as indicator, and calculate to sodium hydroxide (or potassium hydroxide) if alkaline, or to oleic acid, if acid.

(3) *Matter insoluble in water.* Proceed as in the determination of matter insoluble in alcohol. After filtering and thoroughly washing the residue, change receivers and extract it with water at 60° C., and wash the filter thoroughly. (When the matter insoluble in water is all inorganic, boiling water may be used for the extraction and washing.) Reserve the water solution. Dry the filter and residue at 100° to 105° C. for 3 hours, cool, and weigh matter insoluble in water. The nature of this matter may be determined by further examination.

(4) *Total alkalinity of matter insoluble in alcohol. (Alkaline salts.)* Titrate the water solution obtained in C-II (3) with standard acid, using methyl orange as indicator. Calculate the alkalinity to sodium oxide (Na_2O), and, if desired, to any other basis agreed upon by the parties interested.

III. Combined Alkali. Total Anhydrous Soap. Dissolve 5 to 10 grams (±0.01 gram) of the sample, depending upon the anhydrous soap content, in 100 cc. of water in a 250-cc. Erlenmeyer flask. When solution is complete, add dilute sulfuric acid in slight excess, insert a small funnel in the neck of the flask, and heat the flask at a temperature not exceeding 60° C. until the fatty acids separate as a clear layer. Transfer to a separatory funnel, draw off the acid layer into a second separatory funnel, and shake the acid aqueous liquid with two 20-cc. portions of ethyl ether. Dissolve the fatty acids in the ether used for washing the aqueous liquid and shake with 10-cc. portions of water until they are no longer acid to methyl orange. Unite the water portions used for washing and shake with 20 cc. of ether. Wash this ether until the wash water is neutral to methyl orange. Save the acid water for determination of chloride (C-IV).

Unite the ether solutions (if necessary, filter, washing the paper with ether) in a suitable weighed vessel, add 100 cc. of neutral alcohol free from carbon dioxide, add phenolphthalein, and titrate to exact neutrality with standard sodium hydroxide solution. Evaporate off the alcohol, dry to constant weight as in the determination of matter volatile at 105° C., and calculate the percentage of soda soap. This naturally includes any mineral oil and neutral fat, which, if determined separately, must be deducted from the result to obtain the true soap. Calculate the combined sodium oxide (Na_2O) and deduct from the weight of soda soap to give the acid anhydrides. If the original soap was potash soap, proper calculation must be made to reduce to potassium oxide (K_2O), or the titration made directly with standard potassium hydroxide solution. In case the soap shows an excess of free acid, proper corrections must be made in calculating the combined alkali in the original soap. (A blank test should be made on the sodium or potassium hydroxide solution for neutral salts and the proper corrections made if necessary.) With soaps containing a large amount of soluble silicates, and soap products containing a high percentage of finely divided material insoluble in water, the foregoing procedure cannot be applied as given. In such cases the filtrate obtained in the determination of total matter insoluble in alcohol can be used after neutralizing any free acid or alkali. Evaporate off the alcohol on a steam bath, take up in water, and proceed as above.

With soap products containing a high percentage of matter insoluble in alcohol where approximate results will suffice, such as may be the case with cleansers, soap powders, scouring compounds, pastes, etc., and where agreed upon by the parties interested, the alcoholic solution, obtained after filtering off and washing the matter insoluble in alcohol, may be evaporated directly in a weighed vessel, dried at 105° C. to constant weight, and the result reported as soap.

IV. Chloride. Neutralize with chloride-free alkali the acid water obtained in paragraph C-III. Titrate with standard silver nitrate solution, using potassium chromate as indicator, and calculate the result to sodium chloride or potassium chloride as the character of the soap indicates.

In case the total anhydrous soap is not to be determined, it will be more convenient to use the following method (*4*): Dissolve 5 grams (±0.01 gram) of the sample in 300 cc. of water, boiling if necessary to effect solution. Add an excess of neutral, chloride-free magnesium nitrate solution [about 25 cc. of a 20 per cent $Mg(NO_3)_2 \cdot 6H_2O$ solution]. Without cooling or filtering, titrate with standard silver nitrate solution, using potassium chromate as indicator.

V. Unsaponified and Unsaponifiable Matter (*17*).

(1) *Extraction cylinder.* The cylinder shall be a 250-cc. glass-stoppered cylinder about 35 mm. (1.375 inches) in diameter and about 30 cm. (12 inches) high.

(2) *Petroleum ether.* The solvent used should be of the pentane type, containing a minimum amount of isopentane, isohexane, and hexane, and meeting the following requirements:

Initial boiling point, not less than 35° C. nor over 40° C.
Dry-flask end point, not less than 50° C. nor over 60° C.
Distilling under 55° C., at least 95 per cent
Distilling under 40° C., not over 85 per cent
Specific gravity at 15.5° C. (60° F.), 0.630 to 0.675
Color, water white. Doctor test, sweet
Evaporation residue, not over 0.002 per cent by weight
Copper-strip corrosion test, noncorrosive
Unsaturated compounds, trace only permitted

(3) *Determination.* Weigh 5 grams (±0.2 gram) of the prepared sample into a 250-cc. Erlenmeyer flask or beaker which contains approximately 0.1 gram of bicarbonate of soda, and dissolve in 100 cc. of redistilled 50 per cent ethyl alcohol. Warm and shake to effect solution, keeping the temperature under 60° C., and filter off any undissolved residue on a Gooch crucible with an asbestos pad or in a funnel, using an asbestos pad deposited on a perforated porcelain disk. Wash three times with hot 50 per cent alcohol and then with 5 cc. of hot 95 per cent alcohol. Wash with a small amount of petroleum ether to remove any traces of unsaponified and unsaponifiable matter. Transfer the entire alcohol-water and ether filtrate to the extraction cylinder and make up to the 160-cc. mark with redistilled 50 per cent ethyl alcohol. Add 50 cc. of petroleum ether, shake vigorously for 1 minute, and allow to settle until both layers are clear. The volume of the upper layer should be about 40 cc. Draw off the petroleum ether layer as closely as possible, by means of a slender glass siphon, into a separatory funnel of 500-cc. capacity. Repeat the extraction at least six times using 50 cc. of petroleum ether each time. Wash the combined ether extracts first with a mixture of 15 cc. of 0.1 *N* sodium hydroxide solution and 15 cc. of 95 per cent alcohol, and then three times with 25-cc. portions of 10 per cent alcohol, shaking vigorously each time. Transfer the petroleum ether extract to a beaker and evaporate the petroleum ether on a steam bath by the aid of a current of air.

Test the residue for solubility by treating with 50 cc. of petroleum ether at room temperature. Filter and wash free from the insoluble residue, if any; evaporate and dry in the same manner on the steam bath, and finally in an air oven at 100° to 101° C. for 30 minutes. Weigh and return to the oven, reweighing at 15-minute intervals until constant weight is reached. Take up the residue in 50 cc. of warm ethyl alcohol, neutralized to phenolphthalein, titrate to the same color as original neutral alcohol with 0.04 *N* sodium hydroxide solution, and calculate to oleic acid. Deduct this figure from the gross weight previously found and report as "unsaponified and unsaponifiable matter." (Any blank from the petroleum ether must be deducted from the weight before calculating the unsaponified and unsaponifiable matter.)

(4) *Unsaponifiable matter.* Weigh 5 grams (±0.2 gram) of the prepared sample into a 200-cc. Erlenmeyer flask. Add 30 cc. of redistilled 95 per cent ethyl alcohol and 5 cc. of aqueous 50 per cent potassium hydroxide, and boil the mixture for 1 hour under a reflux condenser. Transfer to the extraction cylinder and wash to the 40-cc. mark with redistilled 95 per cent ethyl alcohol. Complete the transfer, first with warm and then with cold water, until the total volume is 80 cc. and finally with a small quantity of petroleum ether. Cool the cylinder and contents to room temperature and add 50 cc. of petroleum ether; and then proceed with the extraction as outlined above under "unsaponified and unsaponifiable matter," except that the alkaline wash may be omitted; weigh the residue and correct for fatty acids in the usual manner. Report the result as "unsaponifiable matter."

From the total unsaponified and unsaponifiable matter figured as found above, deduct the unsaponifiable figure and report as "unsaponified matter."

Thorough and vigorous shaking is necessary in order to secure accurate results. The two phases must be brought into the most intimate contact possible; otherwise low and disagreeing results may be obtained.

The above method will not remove all the unsaponifiable matter in soaps to which lanolin has been added. More extractions are required when substances of this nature are present.

VI. Rosin-Wolff's Method, Modified (*16*). Preparation of Fatty and Rosin Acids. Dissolve 5 grams (±0.01 gram) of the sample in 100 to 200 cc. of hot distilled water in a 250-cc. beaker, add a slight excess of dilute sulfuric acid (1 to 1), heat on the steam bath until the fatty acids collect in a clear layer, cool to room temperature, and transfer to a separatory funnel, washing the beaker free from fatty and rosin acids with small portions of ethyl ether, adding the ether washings to the separatory funnel. Add about 50 cc. of ethyl ether to the separatory funnel and whirl to dissolve the fatty and rosin acids. After the solid acids have dissolved in the ether, let stand for at least 5 minutes.

Draw off the aqueous portion into another separatory funnel designated as No. 2, add about 30 cc. of ethyl ether to funnel No. 2, shake vigorously, allow to stand for at least 5 minutes, and then draw off the aqueous portion into another separatory funnel designated as No. 3. Transfer the ether extract to separatory funnel No. 1. Wash the aqueous liquid three more times, using for each washing about 30 cc. of ethyl ether, then discard the aqueous liquid and add the ether washings to funnel No. 1. Now add about 50 cc. of distilled water to the combined ether extracts in funnel No. 1, shake vigorously, and allow to stand for 5 minutes. Draw off the aqueous solution into another separatory funnel. Repeat this operation, combining the water washings until the ether is free from acid, using methyl orange as indicator. Add 50 cc. of ethyl ether to the water washings, shake the separatory funnel vigorously, and allow to stand for at least 5 minutes. Draw off and discard the aqueous solution and wash the ether layer with small portions of distilled water until free from acid, using methyl orange as indicator. Transfer the total ether extract to a 250-cc. Erlenmeyer flask, evaporate off the ether slowly on the side of a steam bath, dry 1 hour in an oven at 105° C., cool, and dissolve in 20 cc. of absolute alcohol.

(1) *First esterification.* Add 10 cc. of a solution of one volume of concentrated sulfuric acid (sp. gr. 1.84) in four volumes of absolute ethyl alcohol, bring to boil on the steam bath, and boil exactly 4 minutes under a reflux condenser. Remove from the steam bath, add to the liquid about five times its volume of 7 to 10 per cent solution of sodium chloride. Transfer to a separatory funnel,

washing the Erlenmeyer flask with small portions of ethyl ether, the ether washing being added to the aqueous solution in the separatory funnel. Add about 30 cc. of ethyl ether to the separatory funnel, shake vigorously, and allow to stand for at least 5 minutes. Draw off the aqueous solution into another separatory funnel (No. 2). Add about 30 cc. of ether to funnel No. 2, shake vigorously, allow to stand for at least 5 minutes, and then draw off the aqueous layer into another separatory funnel (No. 3). Repeat the extraction of the aqueous solution three more times. Then discard the aqueous liquid and add the combined ether solutions to separatory funnel No. 1. Add 50 cc. of sodium chloride solution (7 to 10 per cent) to the combined ether extracts, shake vigorously and allow to stand for at least 5 minutes. Draw off the aqueous solution into another separatory funnel.

Repeat this operation until the washings are neutral to methyl orange, all salt water washings being combined. Add 50 cc. of ether to the combined washings in the separatory funnel. Shake the funnel vigorously, allow to stand for at least 5 minutes, and then draw off and discard the aqueous salt solution. Add 50 cc. of sodium chloride solution and wash the ether layer until the aqueous salt solution is neutral to methyl orange. Dry the ether extract by the addition of about 3 grams of anhydrous sodium sulfate to the separatory funnel, filter into a 250-cc. Erlenmeyer flask, washing with ether, and evaporate off the ether slowly on the steam bath to dryness.

(2) *Second esterification.* Cool and dissolve the residue in 20 cc. of absolute ethyl alcohol and then proceed as above under "first esterification." Add 30 cc. of neutral alcohol (94 per cent or higher) and titrate rosin or rosin soap as desired, using phenolphthalein as indicator (1 cc. 0.5 *N* alkali = 0.173 gram of rosin or 0.188 gram of rosin soda soap). If the pure fatty acid soap is desired, subtract the rosin soap from the total anhydrous soap obtained under C-III.

The above method gives somewhat high results with low-rosin and approximately correct results with high-rosin soap. In all cases where the rosin content is found to be less than 5 per cent, the actual presence or absence of rosin should be checked qualitatively by the Liebermann-Storch test, which is as follows:

Transfer 1 to 2 cc. of the sample of fatty acids to a test tube, treat with 5 to 10 cc. of reagent grade acetic anhydride, and warm on a steam bath. After cooling, pour 1 to 2 cc. into a white porcelain dish and allow a drop or two of sulfuric acid (sp. gr. 1.53) to run down the side of the vessel. If rosin is present, a fugitive violet coloration changing to a brownish tinge is immediately produced at the margin of contact of the reagents. The test should be checked with a sample of fatty acids to which a small amount of rosin has been added.

[Sulfuric acid of 1.53 specific gravity is prepared by diluting 34.7 cc. of concentrated reagent grade sulfuric acid (sp. gr. 1.84) with 35.7 cc. of distilled water.]

VII. Titer Test. (1) *Preparation of total fatty matter (fatty and rosin acids and unsaponified matter).* Dissolve about 50 grams of soap in 500 cc. of hot water, add 100 cc. of 30 per cent sulfuric acid, heat until the fatty matter collects in a clear layer, siphon off the aqueous acid layer, and wash the fatty matter free from sulfuric acid with hot water. Decant the fatty matter into a dry beaker, filter, using a hot-water funnel, or placing both funnel and receiving beaker in a water-jacketed oven, and dry for 20 minutes at the temperature of boiling water.

When other determinations are to be made on the total fatty matter, and volatile and readily oxidizable fatty acids are present, the following method should be used:

Dissolve about 50 grams of the soap in 300 cc. of hot water, transfer to a separatory funnel, add 150 cc. of approximately 2 *N* sulfuric acid, cool somewhat, add 120 cc. of ether, shake, draw off the acid layer, and wash the ether layer free from acid with a strong salt (NaCl) solution. Then draw off the aqueous layer as completely as possible, transfer the ether layer to a flask (it is not necessary to transfer quantitatively), add 20 to 30 grams of anhydrous sodium sulfate, stopper the flask, shake, and let stand at a temperature below 25° C. until the ethereal liquid becomes perfectly clear, showing that all water has been taken up by the sodium sulfate. Filter through a dry paper into another Erlenmeyer flask, and completely evaporate off the ether by passing through the flask a current of dry air and heating the flask to a temperature of about 50° C.

(2) *Determination (5).* (a) Thermometer. The thermometer shall be a standard titer thermometer graduated at zero and in tenth degrees from 10° to 65° C., and certified by the National Bureau of Standards.

(b) Procedure. Transfer the fatty acids prepared as under VII (1), when cooled somewhat, to a titer tube 25 by 100 mm. placed in a 273- to 275-cc. (16-ounce) saltmouth bottle of clear glass 70 by 150 mm., fitted with a cork that is perforated so as to hold the tube rigidly when in position. Suspend the titer thermometer so that it can be used as a stirrer and stir the fatty acids slowly (about 100 r. p. m.) until the mercury remains stationary for 30 seconds. Allow the thermometer to hang quietly with the bulb in the center of the tube and report the highest point to which the mercury rises as the titer of the fatty acids. The titer should be made in a room at about 20° C. for all fats having a titer above 30° C. and at 10° C. below the titer for all other fats.

VIII. Acid Number of Fatty Acids. (1) *Preparation of fatty acids.* Follow procedure given under C-VII.

(2) *Determination.* In a 250-cc. Erlenmeyer flask dissolve 2 grams of the fatty acids, accurately weighed, in 20 to 30 cc. of neutral 95 per cent ethyl alcohol. Titrate with standard alkali, using phenolphthalein as indicator. Calculate the acid number (mg. of potassium hydroxide per gram of fatty acids).

IX. Borax Determination (*12*). Weigh 10 grams (±0.02 gram) of the soap [or 5 grams (±0.01 gram) if more than 5 per cent of borax is present] into a platinum dish and add 2.15 grams of fusion mixture (consisting of 200 grams of sodium carbonate and 15 grams of silica in fine powder). To this mixture add 15 cc. of alcohol, mix with the aid of a glass rod and, after washing the rod with a little alcohol, evaporate the mass to dryness on the water bath. Ignite until the combustible material is destroyed, cover the dish with a piece of platinum foil, and fuse. Completely disintegrate the fusion by boiling with water and transfer the solution to a 250-cc. round-bottomed flask. Acidify with 20 cc. of dilute hydrochloric acid (1 to 1), heat nearly to boiling, and add a moderate excess of dry precipitated calcium carbonate. Connect with a reflux condenser and boil vigorously for 10 minutes. Filter out the precipitate through a folded filter, washing several times with hot water, but keeping the total volume of liquid below 100 cc.

Return the filtrate to the flask, add a pinch of calcium carbonate, and again boil under a reflux condenser. Remove the flame and connect the top of the condenser with a water pump. Apply the suction until the boiling has nearly ceased. Cool to ordinary temperature, add 50 cc. of neutral glycerol; and titrate the solution with 0.1 *N* sodium hydroxide, free from carbonate, using phenolphthalein as indicator. After the end point is reached, add 10 cc. more of glycerol and again titrate. Repeat this process until the addition of glycerol causes no further action on the end point. The number of cubic centimeters required multiplied by 0.00955 will give the equivalent of borax ($Na_2B_4O_7 \cdot 10H_2O$) present in the solution.

X. Determination of Silica Present as Alkaline Silicates. (1) When the material contains no mineral matter that is insoluble in water, ignite a sample of the soap containing not to exceed 0.2 gram of silica in a platinum dish at a low temperature. When charred, extract the soluble salts with water, return the paper and charred residue to the dish, and complete the ignition. Unite the residue in the dish and the water extract, carefully acidify with hydrochloric acid, finally adding the equivalent of from 5 to 10 cc. of strong hydrochloric acid in excess. The dish or casserole containing the solution should be covered with a watch glass while adding acid so as to avoid loss by spray.

(2) When the material contains mineral matter insoluble in water, or a determination of highest accuracy is not necessary, take a portion of the solution after titrating the matter insoluble in alcohol C-II (4) containing not more than 0.2 gram of silica and add 5 to 10 cc. of strong hydrochloric acid.

Evaporate the acidified solution (washing off and removing the cover glass if used) to dryness on a steam bath or hot plate at a temperature not exceeding 200° C. Cool, moisten with concentrated hydrochloric acid, and let stand 5 to 10 minutes, breaking up all lumps with a stirring rod. Add about 25 cc. of hot water. Heat a few minutes and filter through a small ashless paper. Wash thoroughly with hot water.

Evaporate the filtrate to dryness and repeat the above treatment, filtering on a second paper. Carefully ignite the two papers and contents in a weighed platinum crucible, first at a low temperature until the paper is consumed, then over the blast lamp. Cool in a desiccator, weigh, and repeat until constant weight is obtained. If extreme accuracy is desired, moisten the weighed contents of the crucible with water, add 10 cc. of hydrofluoric acid and 4 drops of strong sulfuric acid, evaporate to dryness over a low flame, ignite at the temperature of the blast lamp for about 2 minutes, cool in a desiccator, and weigh. The difference between this weight and the previous weight is the weight of the silica (SiO_2, *8*).

To calculate sodium silicate having the ratio $1Na_2O:3.25$ SiO_2, multiply the weight of SiO_2 by 1.308 (*15*).

XI. Determination of Carbon Dioxide (Carbonates). For most determinations the dry matter insoluble in alcohol as obtained in C-II (1) will be suitable for this determination. In some cases it might be desired to run the test directly on an original sample of the soap. This should always be done when the highest accuracy is required. Any reliable absorption method for determining carbon dioxide may be used (*1*).

The following is a method which has proved satisfactory:

A 250-cc. Erlenmeyer flask is placed on a gauze over a burner. The flask is equipped with a 2-hole rubber stopper, one opening of which carries a 25-cm. (10-inch) reflux condenser and the other a thistle tube equipped with a 3-way stopcock. The lower end of the thistle tube is drawn to a small point, which is placed very close to the bottom of the flask. To the straightaway end of the stopcock is attached a small funnel for the introduction of acid to the flask. The other opening of the stopcock is attached to receive air from a purifying tube containing soda-asbestos (ascarite) or other suitable carbon dioxide absorbent. The top of the reflux condenser is attached first to a drying tube containing a dehydrating agent such as concentrated sulfuric acid or magnesium perchlorate, and then to a weighed tube containing ascarite and magnesium perchlorate, and a second containing concentrated sulfuric acid. This train is attached to a protective U-tube containing calcium chloride. The U-tube is attached to an aspirator.

Procedure. Set up the apparatus, leaving out the weighed train, and aspirate with a slow stream of the dry carbon dioxide-free air until the apparatus is freed from carbon dioxide. Insert the train and continue the aspiration for 0.5 hour. Check the weight of the train to determine if the air is passing through too fast, or if the system is free from carbon dioxide. The system must be free from leaks. Weigh out 1 or 2 grams of the sample into the Erlenmeyer flask, cover with 20 cc. of freshly boiled distilled water and close the apparatus with the train in place. Add 20 cc. of dilute hydrochloric acid (1 to 1) through the funnel very slowly, with no heat being applied to the flask. The rate of adding acid should be carefully controlled so that the gas does not pass through the train too rapidly. As soon as the acid is added, start aspiration gently. When the absorption begins to slacken, start heating gently and continue until the contents of the flask have boiled 15 to 20 minutes. Stop heating and continue aspirating until the flask has cooled down. Remove the train and weigh. The increase of weight represents carbon dioxide, which multiplied by 2.41 equals sodium carbonate.

XII. Determination of Phosphates (*2*). If a qualitative test has shown the presence of phosphates and their determination is desired, the matter insoluble in alcohol C-II (1) or the ash from the incineration of an original sample can be used. An original sample should always be used when the highest accuracy is desired.

(1) *Reagents.* (a) Molybdate Solution. Dissolve 100 grams of molybdic acid in dilute ammonium hydroxide (144 cc. of ammonium hydroxide, sp. gr. 0.90, and 271 cc. of water); pour this solution slowly and with constant stirring into dilute nitric acid (489 cc. of nitric acid, sp. gr. 1.42, and 1148 cc. of water). Keep the final mixture in a warm place for several days or until a portion heated to 40° C. deposits no yellow precipitate of ammonium phosphomolybdate. Decant the solution from any sediment and preserve in glass-stoppered vessels.

(b) Ammonium Nitrate Solution. Dissolve 100 grams of commercial ammonium nitrate, phosphate-free, in water, and dilute to 1 liter.

(c) Magnesia Mixture. Dissolve 55 grams of crystallized magnesium chloride ($MgCl_2 \cdot 6H_2O$) in water, add 140 grams of ammonium chloride and 130.5 cc. of ammonium hydroxide (sp. gr. 0.90), and dilute to 1 liter.

(d) Dilute Ammonium Hydroxide for Washing. Dilute 50 cc. of ammonium hydroxide (sp. gr. 0.90) to 1 liter.

(2) *Determination.* Weigh out a 2-gram ($\pm$0.01 gram) sample of the alcohol-insoluble or ash, and proceed as in C-X for removal of silica, saving the filtrate. Make up to 250 cc., concentrating if necessary. Pipet an aliquot corresponding to 0.50 or 1 gram into a 250-cc. beaker; add ammonium hydroxide in slight excess; and barely dissolve the precipitate formed with a few drops of nitric acid, stirring vigorously. Add about 15 grams of dry ammonium nitrate or a solution containing that amount. Heat to about 60° C. and add 70 cc. of the molybdate solution for every decigram of phosphoric acid (P_2O_5) present.

Digest at about 65° C. for an hour, and determine if the phosphoric acid has been completely precipitated by adding more molybdate solution to the clear supernatant liquid. Filter, and wash with cold water, or preferably, ammonium nitrate solution. Dissolve the precipitate on the filter with ammonium hydroxide (1 to 1) and hot water, and wash into a beaker, keeping the volume under 100 cc. Neutralize with hydrochloric acid, using litmus paper or bromothymol blue as an indicator, cool, and from a buret add slowly (about 1 drop per second), stirring vigorously, 15 cc. of magnesia mixture for each decigram of phosphoric acid (P_2O_5) present. After 15 minutes add 12 cc. of ammonium hydroxide (sp. gr. 0.90). Let stand till the supernatant liquid is clear (2 hours is usually enough), filter, wash the precipitate with the dilute ammonium hydroxide until the washings are practically free from chlorides; dry, burn first at a low heat and ignite to constant weight, preferably in an electric furnace, at 1050° to 1100° C.; cool in a desiccator, and weigh as $Mg_2P_2O_7$. Calculate and report the result as percentage of P_2O_5 or alkaline phosphate known to be present.

XIII. Determination of Sulfates. For most determinations the matter insoluble in alcohol obtained under C-II may suffice. If a determination of the highest accuracy is desired, ignite a 10-gram ($\pm$0.1 gram) sample of the soap and use the ash from the ignition. Digest with 100 cc. of water, cover with a watch glass, and neutralize carefully with hydrochloric acid. When neutralized, add 5 cc. excess of hydrochloric acid, filter, and wash the residue thoroughly. (Evaporation to dryness is unnecessary unless gelatinous silica should have separated, and should never be performed on a bath heated by gas, *9*.) Make up the filtrate to 250 cc. in a beaker, and boil. To the boiling solution add 15 to 20 cc. of 10 per cent barium chloride solution slowly drop by drop from a pipet. Continue boiling until the precipitate is well formed, or digest on a steam bath overnight. Set aside overnight or for a few hours, filter through a prepared Gooch crucible, ignite gently, and weigh as barium sulfate. Calculate to sodium sulfate, or the alkaline sulfate known to be present.

XIV. Determination of Glycerol, Sugar, and Starch. (1) *Determination of glycerol in the absence of sugar.* The solutions

required are: potassium dichromate, 74.552 grams per liter; sodium thiosulfate, 0.1 *N;* potassium iodide, 10 per cent.

Dissolve an accurately weighed sample of the soap equivalent to not more than 3.0 grams of glycerol in 200 cc. of hot water in a 600-cc. beaker. [If starch is present, it will be necessary to remove the matter insoluble in water as described under C-II (1) and (3). Combine the alcohol and water solutions, evaporate off the alcohol, and proceed.] Decompose with 25 cc. of sulfuric acid (1 to 4). If alcohol is present, volatilize it by boiling for 20 to 30 minutes. Cool, remove, and rinse the cake of fatty acids, transfer the acid water and rinsings to a 500-cc. graduated flask, and add about 0.25 gram of silver sulfate to precipitate traces of chlorides and soluble fatty acids. Make up to volume and mix contents thoroughly.

Transfer a filtered, accurately measured 50-cc. aliquot of the above to a 400-cc. beaker, and to this add 75 cc. of accurately measured potassium dichromate solution, followed by 25 cc. of sulfuric acid (sp. gr. 1.84). Cover with a watch glass, and oxidize by heating to 90° to 100° C. for 3 hours. Conduct a blank in like manner but using 100 cc. of water, 25 cc. of sulfuric acid (sp. gr. 1.84), and 25 cc. of accurately measured potassium dichromate. Cool and make up the solutions to 1000 cc. in graduated flasks. The excess of potassium dichromate is determined by taking 50-cc. aliquots of the above, adding 50 cc. of water and 20 cc. of 10 per cent potassium iodide solution, and titrating the liberated iodine with 0.1 *N* thiosulfate, using starch solution as indicator.

Calculate the percentage of glycerol (1 cc. of the potassium dichromate solution equals 0.0100 gram of glycerol).

(2) *Determination of sugar.* Dissolve 10 grams (±0.01 gram) of the soap in 200 cc. of hot water in a 600-cc. beaker. Decompose with 25 cc. of sulfuric acid (1 to 4), boil gently for 20 minutes to invert the sucrose completely. Cool, remove, and rinse the cake of fatty acids. Extract the acid liquid with 25 cc. of ether. Neutralize the acid liquid with sodium hydroxide solution and transfer to a 500-cc. graduated flask, make up to volume and mix thoroughly. Determine invert sugar in 50 cc. of this solution by the Munson-Walker Method (*11*). To calculate sugar (sucrose) multiply the amount of invert sugar found by 0.95. [If starch is present, first remove as described under C-XIV (1) and then proceed as above.]

(3) *Determination of glycerol in the presence of sugars* (*10*). Proceed as above under (1), taking a sample so that the sum of the glycerol and sugar is not more than 3.0 grams. [If starch is present, this must first be removed as described in C-XIV (1).] The solution must be boiled in all cases at least 20 minutes to ensure complete inversion of sucrose. Determine the amount of potassium dichromate solution required to oxidize both the sugar and glycerol. Determine also the sugar by the method given in (2).

Calculate the percentage of glycerol after deducting the amount of potassium dichromate required by the sugar.

1 cc. of potassium dichromate equals 0.0100 gram of glycerol
1 cc. of potassium dichromate equals 0.01142 gram of invert sugar

(4) *Determination of starch* (*3*). Separate the matter insoluble in water as under C-II (3), using a sample of soap that will give not more than 3 grams of starch. Transfer the insoluble matter, without drying, to a beaker and heat for 2.5 hours with 200 cc. of water and 20 cc. of hydrochloric acid (sp. gr. 1.125) in a flask provided with a reflux condenser. Cool, and nearly neutralize with sodium hydroxide. Complete the volume to 250 cc., filter, and determine the reducing sugars by the gravimetric method as given under method for the determination of sugar.

Calculate the amount of dextrose (*d*-glucose) equivalent to the cuprous oxide obtained. This multiplied by 0.90 equals the amount of starch.

XV. Determination of Volatile Hydrocarbons (*13*). This method requires a source of dry, oil-free steam which is passed through the sample treated with acid, sufficient to liberate the fatty acids from the soap. The steam is next passed through strong caustic solution to scrub out any volatile fatty acids, while the volatile hydrocarbons are condensed with the steam in a suitable arrangement which allows the excess water to flow away, leaving the volatile hydrocarbons in the measuring buret. The method may be applied to samples containing substances immiscible with water and volatile with steam. For solvents heavier than water a Bidwell-Sterling tube should be used.

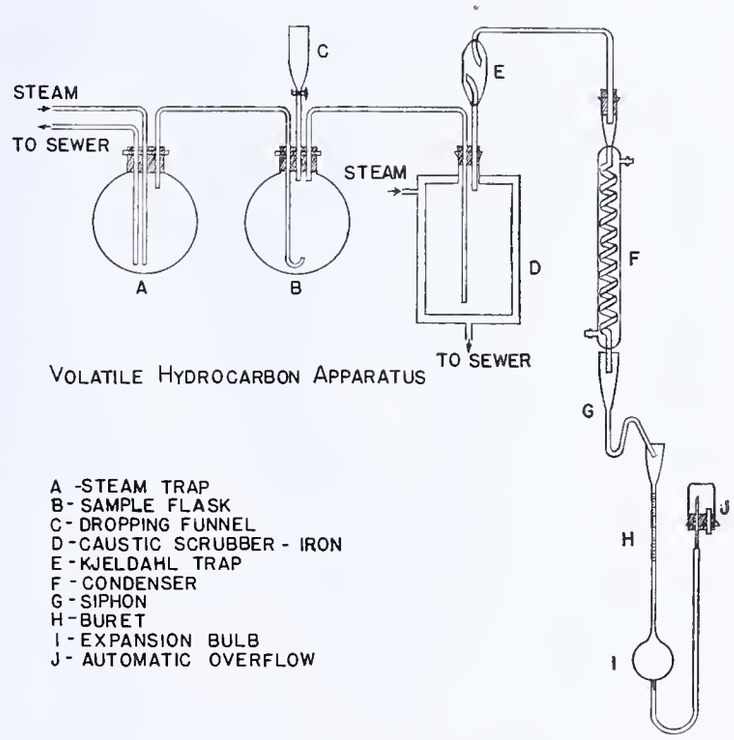

Figure 1

Apparatus. The apparatus and its arrangement are shown in Figure 1. The following are the important items.

Steam trap, *A*, a 1-liter round-bottomed ring-necked flask equipped with a siphon tube to the drain from the bottom of the flask and provided with a means of regulating the steam flow into the flask.

Evolution or sample flask, *B*, a 1-liter round-bottomed ring-necked flask. In case large samples are desirable the size of this flask may be increased.

Caustic scrubber flask, *D*, a steam-jacketed metal flask is preferred, but a 1-liter Florence flask provided with a steam coil of 0.32-cm. (0.125-inch) copper tubing around the upper half may be used. If the glass flask is used, it should be provided with a safety bucket below it and should be renewed frequently since the strong caustic dissolves the glass rather rapidly. This flask should be connected to the condenser by a Kjeldahl connecting tube, *E*, or similar safety device.

The inlet tubes for the steam into the evolution and scrubber flasks should extend nearly to the bottom of the flasks and be bent at right angles and parallel to the sides of the flask.

Condenser, *F*, a 30.5-cm. (12-inch) or longer spiral condenser of sufficient bore so that the condensate will not readily close it.

Measuring buret, *H*, a 10-cc. buret calibrated to 0.1 cc. and carrying a bulb, *I*, approximately 100-cc. capacity, at the lower end.

The stoppers used should be of a good grade of rubber and should have been thoroughly cleaned free from any surface sulfur and should be given a steam-distillation in position for several hours before use on a sample.

Insulating the flasks and tubing to reduce condensation aids distillation and its control.

Determination. Place 150 cc. of sodium hydroxide solution (about 1.47 sp. gr.) and several sticks of solid sodium hydroxide to provide against dilution in the scrubber flask. Rinse out the condenser and buret with acetone. Attach a rubber tubing to the lower end of the buret, fill the buret and tubing with water, and raise the outer end of the tubing so that the water level in the buret is near the top of the scale when the water is flowing to the drain from the automatic overflow, *J*. Be sure the

connections are tight and that the tubing contains no air bubbles. Place the condenser in position so that the lower end extends directly into the upper end of the buret just above the water level or connect to an adapter siphon, *G*, which discharges into the buret. The cooling water should be 15.5° C. or colder. Ice water may be desirable for low-boiling hydrocarbons.

Weigh 100 grams (±0.5 gram) of the soap (cut into cubes of about 1-cm. edges) or 50 grams (±0.3 gram) of soap powder and transfer to the evolution flask. Add about 10 grams of gum arabic (commercial) and 100 cc. of distilled water. Place the flask in position with 100 cc. of sulfuric acid (1 to 3) in a dropping funnel, *C*, carried in the stopper. Connect with the steam line, wash the flasks and the condenser, making sure that the stoppers are tightly fitting and held in place by wiring. Rubber connections in the lines between the evolution flask and condenser should be avoided.

Add the acid to the sample slowly to avoid excessive frothing. While adding the acid, turn on the steam cautiously, so adjusting the pressure by a bleeder valve that just enough steam flows to prevent any liquid from backing into the steam trap flask.

When all the acid has been added, turn on enough steam to cause brisk distillation, taking care that no liquid is carried over from the evolution and wash flasks and that the condenser water does not become warm.

Continue the distillation until there is no increase in the volume of the upper layer for 45 minutes or no small droplets can be noted in the condensate.

When distillation is completed, shut off and drain the condenser water, and allow the steam to heat up the condenser to drive out the last traces of volatile hydrocarbon. Shut off the steam as soon as vapor begins to issue from the lower end of the condenser. Immediately open the stopcock of the dropping funnel to prevent caustic being drawn into the evolution flask.

Stopper the buret and allow its contents to come to room temperature or bring them to a definite temperature by immersing the buret for 1 to 2 hours in a water bath held at 25° C.

Read the volume of the upper layer to the nearest 0.01 cc. The volume multipled by the specific gravity equals the weight of the volatile hydrocarbon. The specific gravity should be determined at the temperature at which the volume is read. A small Sprengel tube made of 3-mm. glass tubing is convenient for this purpose.

Calculation.

$$\frac{\text{cc. of volatile hydrocarbon} \times \text{specific gravity} \times 100}{\text{weight of sample}} = \text{per cent of volatile hydrocarbon}$$

For some samples the volatile hydrocarbon content may be so low that a larger sample than 50 or 100 grams is desirable. The size of the evolution flask may need to be increased if larger samples are used. The amount of water in the evolution flask and acid used should also be correspondingly increased.

Literature Cited

(1) Assoc. Official Agr. Chem., Official and Tentative Methods of Analysis, p. 115 (1930); U. S. Dept. Agr., Bur. Chem., *Bull.* 107, 169 (1908).
(2) Assoc. Official Agr. Chem., Official and Tentative Methods of Analysis, p. 14 (1930).
(3) *Ibid.*, p. 282; U. S. Dept. Agr., Bur. Chem., *Bull.* 107, 53 (1908).
(4) Bennett, H. C., J. Ind. Eng. Chem., 13, 813 (1921).
(5) Com. on Analysis of Commercial Fats and Oils, *Ibid.*, 11, 1163 (1919); Assoc. Official Agr. Chem., Official and Tentative Methods of Analysis, p. 317 (1930).
(6) Com. on Methods of Analysis and Specifications of Commercial Soaps and Soap Products, J. Ind. Eng. Chem., 14, 1159–63 (1922).
(7) Dean, E. W., and Stark, D. D., *Ibid.*, 12, 486 (1920); Bidwell, G. L., and Sterling, W. F., *Ibid.*, 17, 147 (1925); Church, A. K., and Wilson, J. H., *Soap*, 7, No. 11, 35 (1931); *Oil and Soap*, 9, 253 (1932); "Standard Method of Test for Water in Petroleum Products and Other Bituminous Materials," Serial Designation D-95-30, American Society for Testing Materials, "1933 Book of Standards," Part II, p. 891; Federal Specification VV-L-791a for "Lubricants and Liquid Fuels; General Specifications (Methods for Sampling and Testing)," Method 300.13, p. 80.
(8) Hillebrand, W. F., U. S. Geol. Survey, *Bull.* 700, 102 (1919).
(9) *Ibid.*, 700, 232 (1919).
(10) Hoyt, L. F., and Pemberton, H. V., J. Ind. Eng. Chem., 14, 54, 340 (1922).
(11) Munson, L. S., and Walker, P. H., *J. Am. Chem. Soc.*, 28, 663 (1906); Assoc. Official Agr. Chem., Official and Tentative Methods of Analysis; U. S. Dept. Agr., Bur. Chem., *Bull.* 107, 241 (1908).
(12) Poetschke, P., J. Ind. Eng. Chem., 5, 645 (1913).
(13) Procter & Gamble Co., *Oil and Soap*, 13, 6–10 (1936).
(14) Soap Analysis Committee, Am. Oil Chemists' Soc., *Ibid.*, 11, 90–5 (1934).
(15) *Ibid.*, 12, 10 (1935).
(16) *Ibid.*, 12, 10–11 (1935); Wolff, H., and Schölze, E., *Chem.-Ztg.*, 38, 369, 382, 430 (1914).
(17) Trevithick, H. P., *Soap*, 7, No. 6, 29 (1931).

Received September 12, 1936. Presented at the 92nd Meeting of the American Chemical Society, Pittsburgh, Pa., September 7 to 11, 1936. Approved by the Supervisory Committee on Standard Methods of Analysis, and by the Council as official for the American Chemical Society.

A Simple Laboratory Ozonizer

W. SHEEHAN AND W. CARMODY
The Neville Company, Pittsburgh, Pa.

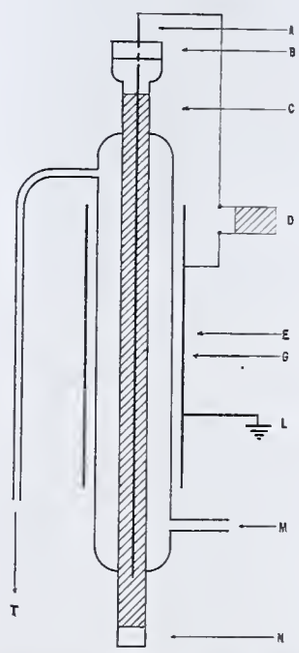

Figure 1. Diagram of Apparatus

A. Brass wire
B, N. Rubber stoppers
C. 5 per cent sulfuric acid
D. 15,000-volt transformer
E. Aluminum foil
G. 600-mm. condenser
L. Ground
M. Oxygen
T. Ozone (oxygen)

A QUICKLY assembled ozonizer that can be operated for relatively long periods to give satisfactory yields is shown in Figure 1, which is self-explanatory. It has been constructed of a 600-mm. Pyrex condenser with extended side arm, and from other materials available in a laboratory. It is simple in construction, quickly assembled, relatively inexpensive, and can be dismantled into service as a standard condenser.

The transformer used was obtained from a neon sign. Several were tried, ranging from 10,000 volts upwards; all were satisfactory, and although not a stockroom item with most laboratories, they can be readily obtained from any neon sign agency. Used transformers are always available.

The units are supported in ordinary ring stands, insulation being provided by means of cork or rubber between the outer foil and the support. Several can be used in series by making the proper sealed connection.

Received November 7, 1936.

Measurement of Distensibility of Organic Finishes

A. E. SCHUH AND H. C. THEUERER, Bell Telephone Laboratories, New York, N. Y.

ONE of the most important physical characteristics determining the serviceability of an organic finish is distensibility. This property perhaps more than any other furnishes an excellent means of following the ravages of age on a finish. By comparing their rates of change of distensibility with time, otherwise seemingly similar finishes can often be readily differentiated. In the case of oleoresinous varnishes and enamels, differences in oil length are clearly reflected in the degree of distensibility, and progressive embrittlement with age is readily followed. In the case of cellulose-ester finishes the effects of varying the amount and kind of plasticizer are revealed by distensibility measurements. In this paper the several variables that affect the flexibility of a finish will be briefly discussed. Two test devices for measuring the distensibility of organic finishes will be described in detail and the results obtained with them compared.

The variables that determine the distensibility of an organic finish are: (1) composition of the film-forming material, (2) thickness of the organic finish, (3) age and exposure history of the finish, (4) temperature and humidity at time of test, and (5) the rate of stress application.

These constitute the major variables that any distensibility method must take into consideration. Some idea of the relative importance of several of these factors can be had by examining the illustrative experimental values shown in Tables I, II, III, and VII. The per cent elongation shown in these tables was determined by stretching finish specimens to point of rupture, by a method described at a later point in this paper.

Methods of Test

There are two general methods of measuring the distensibility of organic finishes. One is the free-film method, and the second is by bending or stretching a metal specimen coated with an organic finish. In the first method, a suitably shaped and detached film of the finish is stretched between two clamps, and the tensile strength and per cent elongation up to the point of rupture are directly determined. The value of this test was clearly shown by Nelson (*1*, *3–6*) and his coworkers a number of years ago. More recently Hunt and Lansing (*2*) have published an interesting and important paper in which the same method was used to determine the significance of the change of the humidity and temperature coefficients of distensibility with age.

In this laboratory the authors have for several reasons preferred to measure distensibility of actual finish specimens, even though this is attended by a limitation of the test to flexible base materials. The distensibility of a paint film attached to its basis material is affected by both cohesional and adhesional factors. The relation between these factors is not as yet quantitatively known. However, the user of paint materials is interested in the degree to which a given finish may actually be bent or stretched. In the case of those finishes in which the adherence of the organic coating is of a very low order, distension tests using a finish specimen yield distensibility values approximating those obtained by the free-film method at equivalent rates of distension.

Two methods of measuring the effective distensibility of organic finishes have been investigated. In each case, sample specimens of the actual finish—that is, organic coating applied to its base material—are used. One method employs an improved mandrel test, in which a number of mandrels of different diameters are used, and the other employs a direct-extension test in which a standard A. S. T. M. tensile specimen for sheet metals is coated with the finish and is stretched to the first sign of film rupture. At this point the per cent elongation is determined directly. In either method the test is performed under conditions of known temperature and humidity, and the age and thickness of the specimen are known.

Mandrel Test

The mandrel test, as developed in this laboratory, employs an apparatus (Figure 1) in which six test strips, 3 inches by

TABLE I. EFFECT OF COMPOSITION ON DISTENSIBILITY OF ESTER GUM VARNISH

Oil Length	Elongation
Gal.	%
10	3.2
25	36.5
40	43.8

Thickness of coatings, 0.0005 inch. Aged 1 month indoors plus 1.5 months outdoors.

TABLE II. EFFECT OF TEMPERATURE AND HUMIDITY ON DISTENSIBILITY

	Per Cent Elongation					
	Temperature, 77° F.			Relative Humidity, 50 Per Cent		
Material	26%[a]	50%[a]	90%[a]	55° F.	77° F.	95° F.
10-gallon ester gum varnish	1.5	4.2	49.9	0.6	4.2	54.0
Synthetic enamel (air dry)	15.0	15.1	54.9	2.4	15.1	53.2
Lacquer enamel (highly plasticized)	22.5	24.5	31.2	12.8	24.5	31.6
Synthetic enamel (baked)	43.0	42.3	46.6	12.5	42.3	48.9

[a] Relative humidity.
In all cases coatings are 2 weeks old. All films are approximately 0.001 inch thick.

TABLE III. EFFECT OF THICKNESS AND AGE ON DISTENSIBILITY

Material	Thickness	Per Cent Elongation I[a]	II[b]	III[c]
	0.001 inch			
10-gallon ester gum varnish	0.5	8.5	2.4	2.9
	1.0	8.2	2.1	2.1
	3.0	4.7	...	3.2
	6.0	4.2	...	7.1
25-gallon ester gum varnish	0.5	>60	25.5	49.7
	1.0	59	48.3	54.4
	3.0	>60	>60	>60
	6.0	58.6	>60	>60
Lacquer A	0.5	19.4	2.9	13.7
	1.0	19.6	6.0	9.8
	2.5	9.4	1.7	2.4
	4.0	11.2	2.7	3.0
Lacquer B	0.5	35.1	2.7	22.4
	1.0	30.9	5.6	21.1
	3.0	23.0	8.7	19.5
	6.0	24.0	12.5	20.2
Baked synthetic varnish enamel A	0.5	42.2	10.3	9.6
	1.0	43.7	2.0	7.5
	3.0	38.5	2.3	3.8
	6.0	28.9	1.6	2.3
Baked synthetic varnish enamel B	0.5	58.6	3.1	>60
	1.0	>60	5.4	>60
	3.0	>60	29.0	>60
	6.0	>60	51.6	>60

[a] Test specimens aged one month at 77° F. and 50 per cent relative humidity.
[b] Same as in [a] plus 13 months outdoors.
[c] Test specimens aged 16 months as in [a].

approximately 0.5 inch, are bent either singly or simultaneously around six mandrels of diameters 0.125, 0.25, 0.375, 0.5, 0.75, and 1 inch, respectively. Each test strip is securely locked in place at the lower end and is then bent by a drawbar in a manner that assures close contact of the specimen against the mandrel surface during the entire bend of almost 180°. Smooth motion of bending is assured by the use of a worm-gear mechanism between the crank handle and the drawbar.

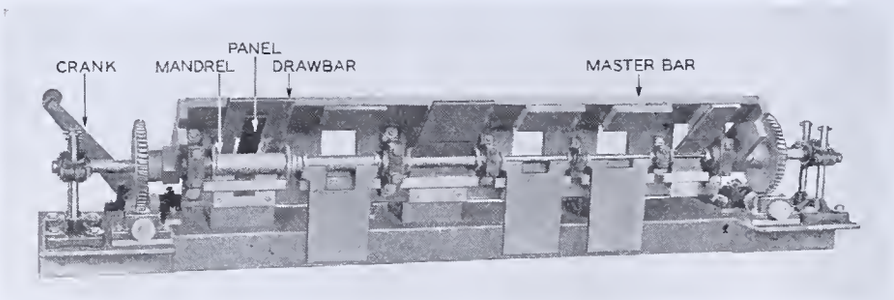

Figure 1. Apparatus for Mandrel Test

In this test, it is important to ascertain the degree to which the surface of the test specimen is actually stretched during the bending. This is dependent primarily on the radius of curvature of the mandrel and the thickness of the test strip. A first approximation to the actual per cent elongation of the finish as a result of bending can be computed on the assumption that the neutral surface lies halfway between the outer surfaces of the strip. This is the condition that would prevail if the stresses were within the elastic limit of the metal base. With this assumption it can be readily shown that the elongation is

$$e = \frac{t}{2r + t} = 100\,\frac{t}{2r + t} \text{ per cent} \qquad (1)$$

where r is the radius of the mandrel
t is the thickness of the strip

Table IV, which is based on Equation 1, gives the values of per cent elongation for three panel thicknesses and the six mandrel sizes.

Table IV. Variation in Distensibility with Panel Thickness

(Per cent elongation)

Panel Thickness	Mandrel Diameter in Inches					
	0.125	0.25	0.375	0.5	0.75	1
Inch	%	%	%	%	%	%
1/64	11.1	5.9	4.0	3.0	2.0	1.5
1/32	20.0	11.1	7.7	5.9	4.0	3.0
1/16	33.3	20.0	14.3	11.1	7.7	5.9

Actually the elastic limit is definitely exceeded in most of the bending operations, the neutral surface shifts toward the compressed side of the specimen, and the elongation of the stretched surface therefore increases. This increase in elongation cannot be calculated directly, but must be determined experimentally. The authors have performed such an experiment for 1/32-inch panel stock and for three commonly used metals in order to determine the magnitude of this increase in elongation.

To do this a special jig shown in Figure 2 was devised in which metal strips were securely bent around mandrels of several sizes. Each strip prior to bending was marked with two finely scratched lines. The distance between lines was determined with a comparator to an accuracy of 0.00008 inch (0.0002 cm.). With the strip in position on the mandrel, the angle subtended at the center by the distance between the hair lines was determined to within ±5 seconds of arc. The total distance between the center of the mandrel and the surfaces of the specimen was next measured and the new extended length between gage marks calculated. Using this method, values for all but the 0.125-inch mandrel were determined. The values for the 0.125-inch mandrel were obtained by extrapolation (values plotted on double logarithmic paper) from the values for the other mandrels. The values obtained for the per cent elongation of 1/32-inch sheet stock of hard and annealed brass and of cold-rolled mild steel are shown in Table V.

It is of interest to note that the annealed metal which has the least elastic range shows the greatest deviation from the values given in Table IV.

The values recorded in Table V are considerably higher than those computed from Equation 1 (see Table IV), particularly for the smaller mandrel sizes. However, since a high degree of accuracy is not necessary for most finish investigations, the computed values of Table IV may be used where the true values are unavailable.

Table V. Actual Per Cent Elongation at Various Mandrel Sizes

Material	Mandrel Diameter in Inches					
	0.125	0.25	0.375	0.5	0.75	1
	%	%	%	%	%	%
3/4 hard brass	29.1	14.2	9.6	6.9	4.6	3.4
Annealed brass	33.5	15.9	10.3	7.5	4.9	3.6
Cold-rolled steel	28.0	13.8	9.0	6.7	4.4	3.3

In the authors' studies of the physical characteristics of finishes it was of interest to ascertain the effect of change of thickness of the organic coating on distensibility. Since the organic coatings increase the effective mandrel diameter, it is necessary to apply a correction factor to the previously determined values to get the true surface elongation of the finish. This correction becomes more important as the thickness of the coating increases. On the assumption that the paint coatings are comparatively weak in tensile properties and therefore exert a negligible effect on the bending resistance of the specimen, a correction formula for coating thickness was developed. It can be shown that the elongation, e', of the outer surface of the finish is given by

$$e' = e + \frac{t'(1 + e)}{r + t}, \text{ where } t' \text{ is the thickness of coating} \qquad (2)$$

Table VI lists the corrections, as computed from Equation 2, in per cent elongation per 0.001 inch of coating to be added to the elongation values of Table V. Equation 2 may also be used to correct the values of Table IV for coating thickness. Since the corrections to be added are small in comparison to

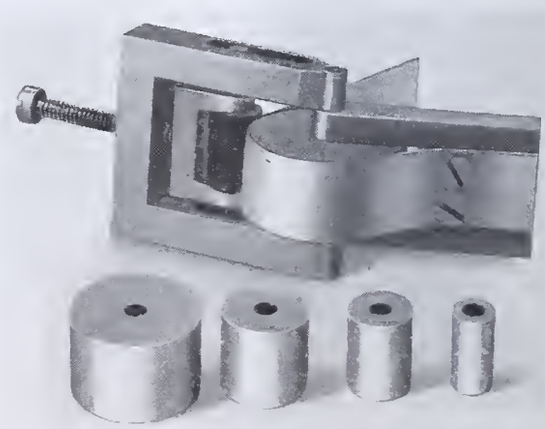

Figure 2. Special Jig

the normal values of elongation, they may be neglected for coating thickness up to 0.001 inch. However, as the coating thickness is increased the corrections become increasingly important, particularly for the smaller mandrel sizes, and therefore cannot be neglected.

Direct-Extension Method

The mandrel test has the inherent drawback of being a discontinuous process—that is, with a convenient number of mandrel sizes, in order to cover a moderate range of values, the elongations are measurable only at fairly wide intervals. One way of overcoming this is by increasing the number of mandrels. Another way is to use a means of extension in which any degree of elongation can be directly measured. This has been accomplished with the apparatus shown in Figure 3. The finish to be tested is applied to a standard A. S. T. M. tensile specimen for sheet metal which is then fastened between two jaws, one of which is pulled at a slow even rate by means of a screw driven through reduction gears by a motor. During stretching, the surface of the finish is observed with a low-power microscope, and the elongation is measured at the point of film rupture. This is done by measuring the change in length of 1-inch gage marks which had been scratched on the surface of the specimen with the aid of the marking instrument also shown in Figure 3. The measurements are made with the aid of an extensometer, which consists of a vernier caliper, to the measuring head of which is attached a small microscope with a cross-hair eyepiece. The cross hair is focused on each of the gage marks and the corresponding vernier readings are noted, from which the elongation can be directly determined. Regarding the precision of the direct extension method, it was found that the average deviation from the mean elongation values was ±8 per cent on the basis of several hundred determinations.

In this test, as in the mandrel test, a qualitative measure of the adherence of the distended film to the base metal is provided. The distensibility of the coating determines the point of failure, and the adherence, the character of the failure. With good adherence the initial rupture is in the form of many fine cracks, whereas with poor adherence the coating may tear off completely and loosen over long distances behind the point of rupture.

Table VI. Correction in Per Cent Elongation for Mandrel Distensibility Values per 0.001 Inch of Coating

Material	Mandrel Diameter in Inches					
	0.125	0.25	0.375	0.5	0.75	1
	%	%	%	%	%	%
3/4 hard brass	1.38	0.73	0.50	0.38	0.26	0.21
Annealed brass	1.43	0.74	0.50	0.38	0.26	0.21
Cold-rolled steel	1.37	0.73	0.50	0.38	0.26	0.21

In both these methods of measuring finish distensibility, granulation of the metal occurs increasingly with degree of extension. This granulation is dependent on the metal or alloy used and serves to increase the actual surface extension of the paint-metal interface. In the values for distensibility reported in this paper this secondary effect due to granulation has not been determined quantitatively.

In one study in which several hundred determinations of distensibility of the same finishes were made by both methods of distension, an opportunity was offered for a comparison of the results obtained by the two methods. The result

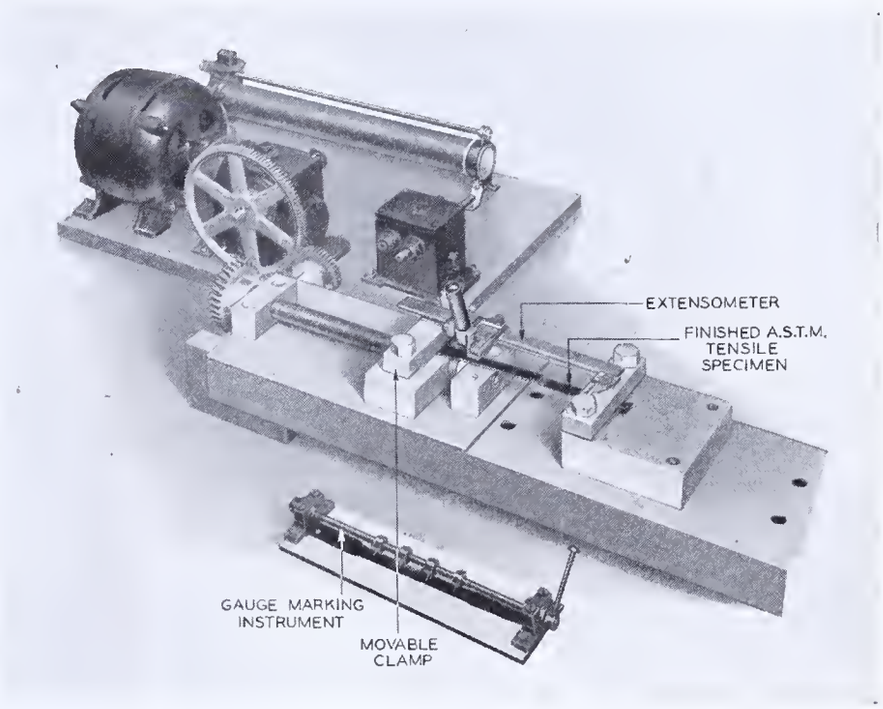

Figure 3. Apparatus for Direct-Extension Method

was disconcerting but illuminating. Although the same materials over a common base metal at equivalent thicknesses of coating and at the same age were measured under identical conditions of temperature and relative humidity, it was found that about half of the values for distension as determined by the mandrel test were considerably below those obtained by direct extension. Correction for coating thickness and using the values for actual surface extension as recorded in Tables V and VI reduced the disagreement between the two methods only moderately.

The discrepancy was consistently larger for coatings combining high tensile strength and high distensibility. This suggested that the rate of stretching, being quite different in the two tests, might account for the disagreements. In the mandrel test a 180° bend is completed in about 15 seconds, whereas in the case of the direct-extension test the rate of stretching was about 0.6 inch per minute. Furthermore, there is a fundamental difference in the rate of stretch in the two methods. In the mandrel test, only a small fraction of the test specimen is under tension at any one moment, but at that moment this fraction receives the complete bending stress as it enters the bending zone. In the second test, however, the entire surface of the specimen is subjected to an even, but steadily increasing stress. It became of interest therefore to see what effect varying the rate of stretch would have on the distensibility values obtained by each of these methods. The mandrel test was performed at rates ranging from 15 seconds to 55 minutes to complete a full bend of 180° C. The rate of the direct extension test was varied from 3.3 inches to 0.2 inch per minute. The effect of varying the rate of stretch is shown in Table VII for four different finishes, compared at equivalent film thickness.

Table VII. Effect of Rate of Stretch on Distensibility of Finishes

Material	Per Cent Elongation				
	Mandrel Test		Extension Test		
	15 sec.	55 min.	0.2 in./min.	0.6 in./min.	3.3 in./min.
A	10.3–15.9	15.9–33.5	25	25	21
B	<3.6	3.6– 4.9	5.9	5.9	3.9
C	<3.6	7.5–10.3	9.5	9.0	8.5
D	10.3–15.9	>33	26.0	21.0	18.0

All films are approximately 0.001 inch thick. The thickness variation between specimens of the same material was within 0.0001 inch.

In each method the effect of slowing down the rate of stretch was to increase the value for distensibility, as is the case for metals and other materials. This indicates that, as more time is allowed for stretching, an opportunity for internal flow within the finish coating is provided, by means of which the finish can partially accommodate itself to the applied stress. This effect was particularly noticeable in the case of finishes that have aged not more than about one month. The effect diminished rapidly with age with thin-finish coatings, and slowly as the coating thickness was increased. The fact that the distensibility values are influenced by rate of stretch means that with either test a constant rate of extension should be used. The authors have found the rate of 15 seconds for the complete bend in the mandrel test and 0.6 inch per minute for the extension test satisfactory.

Summary

Two methods of measuring distensibility of organic finishes are described.

In order to be able to express results in per cent elongation, methods for either calculating an approximate per cent elongation value or determining actual elongation of mandrel specimens are described. A correction for thickness of finish is given.

A direct-extension method for coated specimens is described which has the advantage of permitting any degree of distensibility up to rupture of the supporting base material to be measured.

The factors that affect the distensibility of an organic finish are discussed and the relative importance of these factors is illustrated by experimental values.

Literature Cited

(1) Gardner, H. A., Am. Paint Varnish Mfrs. Assoc., *Circ.* 240 (1925).
(2) Hunt, J. K., and Lansing, W. P., Ind. Eng. Chem., **27**, 26 (1935).
(3) Nelson, H. A., *Proc. Am. Soc. Testing Materials*, **21**, 1111 (1921).
(4) *Ibid.*, **23**, Part I, 290–9 (1923).
(5) Nelson, H. A., and Rundle, G. W., *Ibid.*, **23**, Part 2, 356–68 (1923).
(6) Rundle, G. W., and Norris, W. C., *Ibid.*, **26**, Part 2, 546–55 (1926).

Received September 14, 1936. Presented before the Division of Paint and Varnish Chemistry at the 92nd Meeting of the American Chemical Society, Pittsburgh, Pa., September 7 to 11, 1936.

A Photoelectric Method for the Determination of Phosphorus[1]

C. W. EDDY AND FLOYD DEEDS

Bureau of Chemistry and Soils, U. S. Department of Agriculture, at the Department of Pharmacology, Stanford University School of Medicine, San Francisco, Calif.

WITH existing quantitative methods for detecting phosphorus it is not possible to determine with a high degree of accuracy quantities as small as 0.001 mg. The device herein described was constructed to give a sensitive, simple and rapid, yet accurate, method for phosphorus determinations when applied to the methods of Fiske and Subbarow (*1*), Kuttner and Cohen (*5*), or Kuttner and Lichtenstein (*6*).

The apparatus has been entirely satisfactory when applied to the determination of blood sugar by Folin's method (*2*), the study of phosphatase activity by Jenner and Kay's (*4*) modification of the Kuttner and Cohen procedure, and the determination of yeast population by turbidity measurements.

The use of the photoelectric cell for colorimetric and turbidity estimations is not new. It has been applied by Osborn (*7*), Greene (*3*), and Samuel and Shockey (*8*).

The apparatus described makes use of the circuit outlined by Samuel and Shockey (*8*) modified to permit the use of a sensitive galvanometer, and a smaller light source.

The modified circuit of the apparatus is given in Figure 1. A single light source of low intensity directed vertically upward through a 50-ml. flat-bottomed Nessler tube containing the solution to be tested, and impinging on the photronic cell, causes a deflection of the galvanometer, the amount of the deflection being a function of the quantity of light allowed to pass through the solution.

The circuit used in the apparatus described has two decided advantages over previously described photocolorimeters: The use of a light source of small intensity eliminates temperature effects, the solutions can remain in the apparatus for extended periods without being influenced by temperature. The use of a variable resistor (R_3) instead of a fixed resistor makes it possible to maintain a constant spread on the galvanometer scale, since by its use compensation for battery depletion is regulated.

A number of precautions in the use of this photoelectric colorimeter are essential, when great accuracy is desired. Cleanliness of Nessler tubes, light bulb, photoelectric cell, and the apparatus in general is necessary. The effect of finger marks is appreciable and, unless the Nessler tube is kept clean, is reflected in deflection of the galvanometer to the extent of 1 to 2 mm. It is customary, prior to making a determination, to clean the tube with chromic acid solution, followed by washing with distilled water. Before each reading is made, the outside of the tube is wiped dry and free from finger marks.

The resistance R_1 must be capable of carrying 10 amperes; otherwise temperature changes of the resistance will cause fluctuations in the galvanometer, producing erroneous results.

It is essential to use the same Nessler tube for all determinations, since the authors have not found two tubes characterized by the same calibration curve. This will be seen by comparing Tables I, II, and III with Figure 2, three different Nessler tubes having been used.

Table I. Reproducibility of Calibration Curve

Phosphorus	Blank	0.00093 mg.	0.001868 mg.	0.00467 mg.	0.00934 mg.
Readings[a]	42.2	37.5	30.6	19.5	10.4
	43.2	37.6	31.6	20.2	10.6
	42.0	36.4	31.4	19.9	10.6
	43.2	35.2	30.4	19.5	10.2
	43.6	37.6	30.8	...	10.8
Mean	42.84	36.86	30.98	19.78	10.52

[a] Photronic cell No. 9. Nessler tube No. 3.

Photronic cells vary appreciably in the current output relative to a given change in depth of color. Therefore, each photronic cell must have its own calibration curve.

Because of the sensitivity of the equipment to minute changes in depth of color, it is always essential to follow the identical procedure in developing the color in a series of determinations that was employed in establishing the calibration curve. The same precaution applies to turbidity measurements.

The characteristics of the photronic cell are such that colorimetric methods involving transmitted light of yellow or orange color

[1] Since presentation of this method a similar photoelectric colorimeter has been described (*9*).

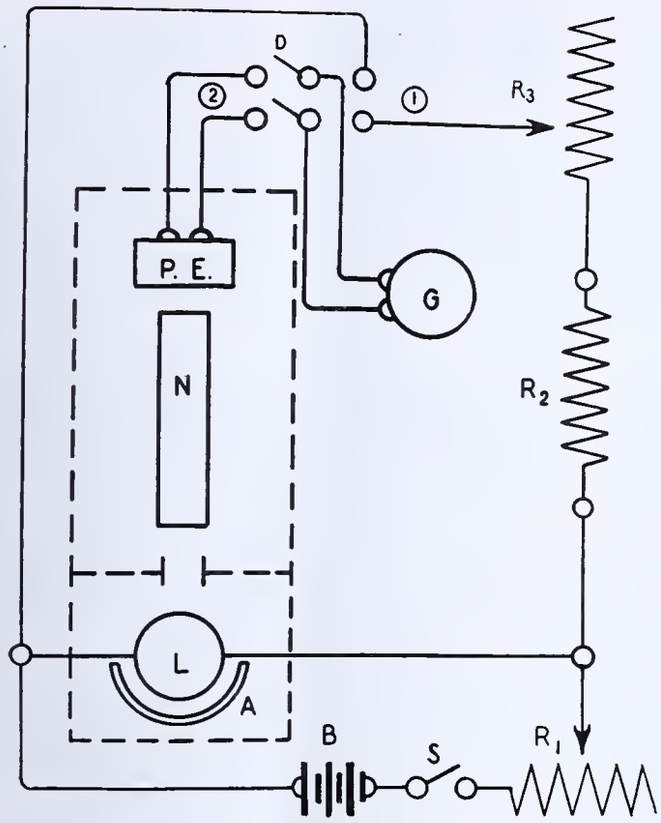

FIGURE 1. SCHEMATIC DIAGRAM

N. Nessler tube, flat bottom
B. 6-volt storage battery
S. Single-pole single-throw switch
L. 3-candle power 6-volt automobile bulb
A. Reflector
D. Double-pole double-throw switch
P.E. Weston 594 photronic cell
G. L.N. box galvanometer (0.025 microamp. per mm.), scale replaced by scale 70 mm. long graduated in 1 mm.
R_1. 3-ohm, 10-amp. variable resistor serially connected to 3-ohm, 10-amp. fixed resistor
R_2. 1.5-megohm fixed radio resistor
R_3. 200,000-ohm variable radio resistor
--- Light-tight box with two separate light-tight compartments; a round 3.75-cm. (1.5-inch) diameter opening is made between *N* and *L* to allow light to pass through Nessler tube

are less satisfactory than methods based on changes in blue. A spectrally pure blue-green filter inserted between the light source and the solution to be tested will be found helpful in the case of yellow solutions.

If it is desired to reduce the sensitivity of the instrument, a shunt can be placed in the galvanometer circuit, or a 0–100 microammeter can be substituted, in which case it becomes necessary to reduce the amount of resistance in R_2 and R_3.

Operation of Colorimeter

Five minutes before a determination is to be made the switch is closed, allowing the apparatus to attain equilibrium. A clean Nessler tube filled with distilled water is placed in position. With switch *D* open, the galvanometer is set at 0. With the double-pole double-throw switch in position 1, the deflection on the galvanometer is set at some arbitrary reading by the use of the resistor R_3. The greater the spread, the greater will be the sensitivity of the apparatus, and the more accurately the unknown substance can be determined. The double-pole double-throw switch is then placed in position 2, and R_1 is adjusted until the galvanometer again gives the same reading as selected in the first operation. It may be necessary to readjust R_3 again, until both positions give the same desired deflection. If the current source is constant there is no further need of adjustment.

TABLE II. PHOSPHORUS IN BONE ASH

Experiment No.	Age of Rat	Weight of Ash	Dilution Factor	Scale Reading[a]	Phosphorus		Variation of Duplicate Reading[b]
	Days	*Mg.*		*Mm.*	*Mg.*	%	%
98	24	11.2	1000	33.0	0.00199	17.76	1.51
				32.8	0.00202	18.03	1.50
102	39	6.8	500	22.2	0.00422	31.03	0.47
				22.0	0.00424	31.17	0.47
107	50	16.7	1000	23.4	0.00395	23.65	2.28
				23.8	0.00386	23.12	2.33
113	52	38.9	2000	23.5	0.00394	20.25	1.78
				23.0	0.00401	20.61	1.75

[a] Photronic cell No. 9, Nessler tube No. 2.
[b] $\frac{\text{Difference in mg.} \times 100}{\text{mg.}}$

Procedure for Determination of Phosphorus

The method for the determination of phosphorus as finally modified by Kuttner and Lichtenstein (*6*) was used. The following reagents are necessary:

STOCK SOLUTIONS. (1) Sodium molybdate ($Na_2MoO_4 \cdot 2H_2O$), 7.5 per cent; (2) 10 *N* sulfuric acid, 282 cc. of concentrated acid (sp. gr. 1.84) per liter; and (3) stannous chloride, 40 per cent in concentrated hydrochloric acid.

STANDARD SOLUTIONS. Dissolve 0.0879 gram of dried monopotassium phosphate (KH_2PO_4) in 1 liter of distilled water, and add a few drops of chloroform. One cubic centimeter of this solution contains 0.02 mg. of phosphorus. Make five standard solutions by placing 1.0, 2.5, 5, 7.5, and 10 cc. of the above solution in each of five 100-cc. volumetric flasks, and filling to the mark with distilled water. These standards contain 0.001, 0.0025, 0.0050, 0.0075, and 0.010 mg. of phosphorus in 5 cc., respectively.

The color of the standards is produced as follows:

A molybdic acid solution is freshly prepared by adding 20 cc. of distilled water to 10 cc. of 7.5 per cent sodium molybdate (solution 1), and then 10 cc. of 10 *N* sulfuric acid (solution 2). A dilute stannous chloride solution is freshly prepared by diluting 0.25 cc. of 40 per cent stannous chloride (solution 3) to 50 cc. with distilled water. To 5 cc. of each standard, 4 cc. of the molybdic acid solution are added and, while stirring constantly and regularly, 1 cc. of the dilute stannous chloride is added. One hour is allowed for the maximum color development.

After the apparatus has been adjusted for the desired sensitivity, the blue colored standards are transferred successively to the Nessler tube and made up to the mark. After placing the tube in the apparatus and closing the light-tight box, the gal-

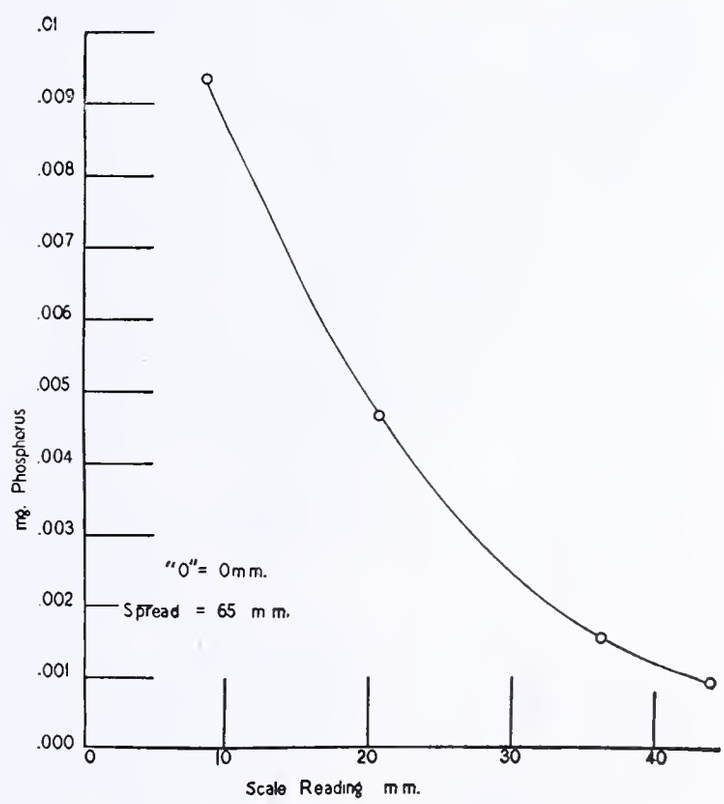

FIGURE 2. STANDARDIZATION CURVE FOR PHOSPHORUS DETERMINATION

Photronic cell No. 9, Nessler tube No. 2

vanometer deflection is noted. Five standards suffice to plot a calibration curve, as shown in Figure 2, which automatically eliminates any error due to traces of impurities in a given set of reagents.

Analysis is accomplished by taking 5 cc. of a solution in which the amount of phosphorus lies within the range of 0.001 to 0.010 mg. The color is developed and the galvanometer deflection obtained as in the case of the standards. From the position of the galvanometer reading on the calibration curve the quantity of phosphorus present may be read off.

TABLE III. PHOSPHORUS IN BONE ASH

Experiment No.	Age of Rat	Weight of Ash	Dilution Factor	Scale Reading[a]	Phosphorus		Variation of Duplicate Reading[b]
	Days	*Mg.*		*Mm.*	*Mg.*	%	%
61	10	2.4	100	32.9	0.00115	4.79	2.61
				33.3	0.00112	4.67	2.68
62	6	1.4	50	24.1	0.00205	7.32	8.29
				25.7	0.00188	6.71	9.06
64	20	15.6	1000	32.4	0.00120	7.69	1.67
				32.2	0.00122	7.82	1.65
66	11	5.1	200	15.2	0.00395	15.49	1.26
				15.4	0.00390	15.29	1.28

[a] Photronic cell No. 1, Nessler tube No. 1.
[b] $\frac{\text{Difference in mg.} \times 100}{\text{mg.}}$

The character of the calibration curve is conditioned by the particular photronic cell, Nessler tube, and set of reagents employed. With these three factors constant, the reproducibility of the calibration curve for photronic cell No. 9, tube No. 3, was determined by noting the galvanometer reading of five sets of standards. Table I lists the mean and individual galvanometer readings for the blank and four solutions containing known concentrations of phosphorus.

The results of a number of typical analyses for phosphorus in bone ash are given in Tables II and III. The data in Table II were obtained with photronic cell No. 9 and Nessler tube No. 2 and fit the calibration curve shown in Figure 2. The data in Table III, using a different photronic cell and Nessler tube, furnish additional evidence of the applicability of the method.

The variation in phosphorus content of bone ash in different experiments is due to the fact that bones from rats of different ages, as well as poisoned and unpoisoned rats, were used. These variations are of no significance for this paper and will be discussed in a subsequent publication.

Summary

A simple photoelectric colorimeter employing a Weston photronic cell is described, and its application to the determination of phosphorus between the limits 0.001 and 0.01 mg. is demonstrated.

Literature Cited

(1) Fiske, C. H., and Subbarow, Y., *J. Biol. Chem.*, 66, 375 (1925).
(2) Folin, O., "Quantitative Clinical Chemistry, Vol. II, Methods," by Peters, J. P., and Van Slyke, D. D., p. 462, Baltimore, Williams & Wilkins Co., 1932.
(3) Greene, C. H., *J. Am. Chem. Soc.*, 56, 1269 (1934).
(4) Jenner, H. D., and Kay, H. D., *Brit. J. Exptl. Path.*, 13, 22 (1932).
(5) Kuttner, T., and Cohen, H. R., *J. Biol. Chem.*, 75, 517 (1927).
(6) Kuttner, T., and Lichtenstein, L., *Ibid.*, 86, 671 (1930).
(7) Osborn, R. A., *J. Assoc. Official Agr. Chem.*, 17, 135 (1934).
(8) Samuel, B. L., and Shockey, H. H., *Ibid.*, 17, 141 (1934).
(9) Yoe and Crumpler, IND. ENG. CHEM., Anal. Ed., 7, 281 (1935).

RECEIVED July 8, 1936. Presented before the Division of Agricultural and Food Chemistry at the 89th Meeting of the American Chemical Society, New York, N. Y., April 22 to 26, 1935. Food Research Contribution No. 297.

Sodium Chlorite as a Volumetric Oxidizing Agent

DONALD T. JACKSON AND JOHN L. PARSONS
Hammermill Paper Company, Erie, Pa.

Sodium chlorite of high purity is now available in quantities which permit it to be considered as a laboratory reagent, particularly as an oxidant in volumetric analysis. A sodium chlorite solution is easily prepared and standardized, and is stable over a period of several months if kept in a dark bottle. Standard sodium chlorite solutions have been successfully used in the determination of sulfur dioxide, sulfites, and bisulfites, and preliminary work indicates that their use can be extended to the quantitative oxidation of other reducing substances.

SODIUM chlorite of high purity has recently been made available (The Mathieson Alkali Works, Inc., 62 East 42nd St., New York, N. Y.) in quantities which permit it to be considered as a laboratory reagent. The stability of sodium chlorite solution and its smooth and easily controlled oxidation reactions suggested that it might prove of use as an oxidizing reagent in volumetric analysis. The authors' investigations have shown that dissolved sulfur dioxide, sulfurous acid, and sulfites can be satisfactorily determined by oxidation with sodium chlorite. Preliminary work indicates that it can probably be applied to the volumetric determination of certain other reducing substances.

There are but few references in the literature to the use of chlorites (*1, 3, 4, 5*) and only one to their use as a quantitative analytical reagent. Levi and Ghiron (*4*) made use of the reaction between calcium chlorite and a permanganate in a neutral solution to determine the permanganate.

The sodium chlorite as obtained is a white, finely crystalline material. Being slightly hygroscopic, it takes up some moisture when exposed to air. The salt dissolves readily in water, its solubility being 91.3 parts in 100 parts of water at 30° C. (*6*). The freshly prepared solutions are entirely clear and colorless. The more concentrated solutions gradually turn yellow and yellow-green if allowed to stand exposed to light.

An analysis (*8*) of a sample of sodium chlorite showed the following percentages: $NaClO_2$, 97.6; NaCl, 0.7; NaOH, 1.5; $NaClO_3$, 0.0; and H_2O (by difference), 0.2.

Preparation and Standardization of Solutions

The equivalent weight of sodium chlorite (as an oxidizing agent in an acid solution) is one-fourth of its molecular weight:

$$ClO_2^- + 4H^+ + 4\,(-) \longrightarrow Cl^- + 2H_2O$$

In this investigation, standard solutions of two different strengths, approximately 0.1 *N* and 0.3 *N*, were prepared by dissolving the calculated amount of salt in freshly boiled distilled water and diluting to the desired volume.

The sodium chlorite solutions were standardized by comparing them against a standard sodium thiosulfate solution whose strength had been determined by the use of potassium iodate according to the modified method of Than (*9*). An accurately measured volume of the sodium chlorite solution was run into an Erlenmeyer flask containing 75 ml. of distilled water, 15 ml. of 10 per cent potassium iodide solution, and 15 ml. of 30 per cent acetic acid. The liberated iodine was titrated with sodium thiosulfate, 5 ml. of a 1 per cent starch solution being added near the end of the titration.

Stability of Sodium Chlorite Solutions

Levi and Natta (*5*) working with solutions of 0.2 *N* and 0.02 *N* sodium chlorite found that the chlorite was stable in the presence of 0.5 per cent sodium hydroxide. The stability of the authors' solutions was tested as follows:

The sodium chlorite solution was carefully standardized and divided into two parts. One portion was placed in a clear, glass-stoppered Pyrex bottle; the second portion was placed in a similar bottle which had been heavily coated on the outside with black paint and wrapped in heavy black paper. The two bottles were then stored in the laboratory (at room temperature) so that they were protected from direct sunlight but exposed to ordinary light. Tests were made on the chlorite solutions (as in the standardization) from time to time. The results are shown in Table I.

Table I. Thiosulfate Equivalent to 1 Ml. of Sodium Chlorite Solution

Elapsed Time	Solution Protected from Light	Solution Exposed to Light
Days	*Ml.*	*Ml.*
0	1.00	1.00
1	1.00	1.00
2	1.00	0.94
5	1.00	0.92
8	1.00	0.92
21	1.00	0.88
30	1.00	0.83
90	1.00	..
210	1.00	..

The sodium chlorite solution is entirely stable over a period of several months when stored so that light is excluded.

Determination of Sulfites

A standard solution of sodium chlorite has been used to determine the sulfites in calcium bisulfite, sodium sulfite, sulfurous acid solutions, and the cooking acid used in the sulfite pulping process. The latter solution contains lignin derivatives, sugars, and other organic matter. The sodium chlorite solution has been found satisfactory in each case.

Hendrixson (*2*) has shown that the oxidation of sulfite by iodate is quantitative. Palmrose (*7*) has shown that the iodate oxidation is not affected by the presence of organic matter in the solution being tested. In this investigation, the results obtained by the iodate titration were taken as the standard and the results of the sodium chlorite titrations compared with them.

Procedure

A measured amount of the solution being tested (or an aliquot part of the diluted solution) was transferred, with the usual precaution to avoid loss of gas, to an Erlenmeyer flask containing 100 ml. of distilled water, 15 ml. of 10 per cent potassium iodide solution, 15 ml. of 30 per cent acetic acid, and 5 ml. of 1 per cent starch solution. The standard chlorite solution was then run in rapidly until near the end point and then drop by drop until the blue starch-iodine color persisted. It is best to avoid shaking the solution until most of the chlorite has been added.

The reaction $ClO_2^- + 2SO_3^{--} \longrightarrow Cl^- + 2SO_4^{--}$ probably takes place if chlorite is allowed to react with sulfite alone. It appears, however, to be a time reaction and seems to go fairly slowly. In the presence of potassium iodide the reactions probably are:

$$ClO_2^- + 4I^- + 4H^+ \longrightarrow Cl^- + 2I_2 + 2H_2O$$
$$2H_2O + 2I_2 + 2SO_3^{--} \longrightarrow 2SO_4^{--} + 4I^- + 4H^+$$

When all the sulfite has reacted, the free iodine gives the deep blue color to the starch, indicating the end of the reaction.

Results

Most of the authors' work has been done on solutions of calcium bisulfite containing from 0.3 to 6.0 per cent of total sulfur dioxide (free and combined). Some of the results obtained are given in Table II. The agreement among different operators was good, the results usually checking within 4 parts per thousand.

Table II. Determination of Total Sulfur Dioxide in Solutions of Calcium Bisulfite

Sample No.	Sulfur Dioxide: Iodate method	Sulfur Dioxide: Chlorite method
	%	%
1	0.537	0.539
2	0.497	0.492
3[a]	4.18	4.18
4	5.66	5.65
5	5.71	5.71
6	5.21	5.19
7	5.25	5.27
8[a]	3.14	3.14
9[a]	3.07	3.07
10	5.07	5.06
11	5.52	5.51
12	5.32	5.33
13	4.88	4.90
14	5.68	5.68
15	5.03	5.02

[a] Solutions did not contain organic matter.

Conclusions

Sodium chlorite gives an easily prepared, easily standardized volumetric oxidizing solution which is stable when properly protected from the light. The analytical procedure is simple and rapid.

Sodium chlorite solutions have been found satisfactory for the determination of sulfur dioxide, sulfites, and bisulfites in various solutions and especially in the calcium bisulfite solutions used in the sulfite pulping process. The chlorite oxidation is not affected by the presence of small quantities of organic substances such as are present in the cooking acid used for the sulfite process.

Preliminary work indicates that sodium chlorite probably can be used for the quantitative oxidation of other reducing substances.

Acknowledgment

Acknowledgment is made for the generous assistance given by C. H. Steinford in the analytical work, and for the valuable help and criticism given by the Mathieson Alkali Works, Inc.

Literature Cited

(1) Bruni and Levi, *Atti ist. Veneto*, **74**, 1711 (1910).
(2) Hendrixson, *J. Am. Chem. Soc.*, **47**, 1319 (1925).
(3) Levi, *Atti accad. Lincei*, **31**, 370 (1922).
(4) Levi and Ghiron, *Ibid.*, **11**, 1005 (1930).
(5) Levi and Natta, *Gazz. chim. ital.*, **53**, 532 (1923).
(6) Mathieson Alkali Works, Inc., data furnished.
(7) Palmrose, *Paper Trade J.*, **100**, No. 3, 38 (1935); *Tech. Assoc. Papers*, **18**, 309 (1935).
(8) Taylor, M. C., The Mathieson Alkali Works, Inc., analysis.
(9) Treadwell and Hall, "Analytical Chemistry," Vol. 2, pp. 553–4, New York, John Wiley & Sons, 1928.

Received September 22, 1936. Presented before the Division of Physical and Inorganic Chemistry at the 92nd Meeting of the American Chemical Society, Pittsburgh, Pa., September 7 to 11, 1936.

303498

Odor Concentration in Air-Conditioned Structures

Determination by the Freezing-Out and Osmoscope Method and Reduction by Activated Carbon

V. A. GANT, University of Illinois College of Medicine, AND H. D. SHAW, The Pullman Company, Chicago, Ill.

IN AIR CONDITIONING any structure where certain percentages of fresh air and recirculated air are utilized, in time the odor concentration will increase to the point where it is very objectionable, and may present a health hazard and industrial problem. It then becomes necessary to remove the odor or its cause. If complete removal is impossible, the odor concentration should be reduced to the point where it is no longer noticeable.

Complete air conditioning involves the control of temperature, humidity, dust, and odors. These factors cannot be controlled satisfactorily unless we have scientific and practical proof as to the efficiency of the equipment. Temperature can be observed on a thermometer, humidity on the hygrometer, and dust by suitable dust-counting apparatus. Methods are known whereby odorous substances known to exist in the air can be determined quantitatively, but information obtained in this way is not satisfactory for obvious reasons. The odors may be so complex and derived from so many different sources that simple chemical determinations of one or more odoriferous substances may represent only a small percentage of the total amount present.

Solution of the problem resolves itself into the following steps: (1) to determine the total odor concentration by a scientific and practical method; (2) to reduce the concentration effectively by some efficient and economical material; and (3) to prove by the developed method how much the odor concentration is reduced by using this material.

A railroad car of the club-lounge type (the use of which was made possible through the courtesy of The Pullman Company) was reserved for the purpose of conducting the tests. In the car selected eating, drinking, smoking, and sleeping were in almost constant progress while the car was in use. The air was composed of about 25 per cent fresh air and 75 per cent recirculated. Large proportions of tobacco smoke, and the odors of food, liquor, and human bodies from the bedrooms and lounge were drawn directly into the recirculated air intake. The condition of the atmosphere during and after a trip is best described by likening it to that of an improperly ventilated room where persons have been eating, drinking, and smoking while playing cards.

Determination of the total odor concentration and quantitative estimation of certain odor-bearing materials were attacked in the following manner:

Known amounts of air were drawn slowly through absorption towers filled with activated carbon. The air was sampled immediately above the recirculated-air grille, thus assuring the same composition as existed in the car. Samples were drawn through a rubber tube into the towers by means of a small Buffalo blower and suction pump connected by a flexible shaft to a small 32-volt motor. The velocity of the air was controlled by a glass stopcock inserted in a rubber tube connecting the second absorption tower with the pump. In 45 hours about 200 cubic feet of air had passed through.

This method was unsatisfactory because the odors could not be recovered from the carbon for identification. Further efforts involved drawing the air successively through washing towers containing, first, dilute sulfuric acid and then dilute alkali. This, too, was unsatisfactory because very little odor could be recovered and it was apparent that chemical action had changed or destroyed the odorous material originally present.

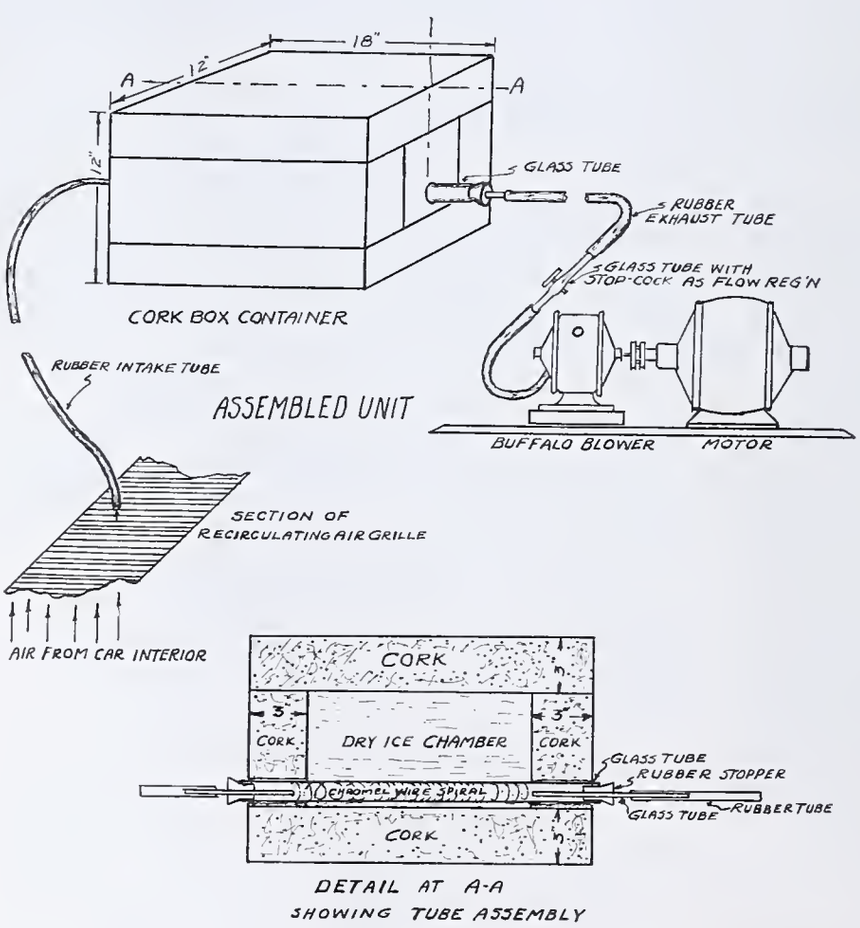

FIGURE 1. APPARATUS FOR FREEZING-OUT METHOD OF ODOR DETERMINATION

Freezing-Out Method

The freezing-out method followed the discouraging results previously mentioned. For this purpose the following apparatus and tests were devised:

A box of 3-inch cork was constructed according to the dimensions in Figure 1 because it was calculated that this size was necessary to hold enough solid carbon dioxide (dry ice) to last 40 to 45 hours. A 1-inch Pyrex glass tube about 19 inches long, containing a chromel wire spiral to serve as a condenser, was inserted through closely fitting holes bored in each end of the box as near as possible to the bottom inside. This tube was fitted with one-hole rubber stoppers at each end,

through which passed smaller glass tubes for connecting to rubber tubing. Pulverized dry ice was packed in the bottom of the box, enough to cover the condenser tube, and 2 solid cakes were sawed to fit and completely fill the remaining space inside the box. The box was tightly strapped and any noticeable leaks were stopped with asbestos fiber.

This container was placed over the hatch in the ceiling of the outside vestibule. A long rubber tube was connected to the intake end of the condenser tube and was allowed to hang over the recirculated-air grille inside the car. To the outlet end of the condenser tube another rubber tube was connected which led to a glass tube containing a stopcock for regulating the rate of air flow. This was connected by rubber tubing to the intake nozzle of a small Buffalo compressor and blower, which was connected by a flexible shaft to a small 32-volt motor. Thus a sample of recirculated air was drawn through the condenser tube, and the moisture and odor were frozen out as a cone of porous ice 3 or 4 inches long. To determine the flow of air, a calibrated manometer containing colored alcohol was connected on the outlet side of the condenser tube. The glass stopcock was so adjusted that the rate of flow was 61.02 cubic inches (1 liter) per minute, and then the manometer was disconnected. Knowing the length of time that the test was allowed to run it was a simple matter to calculate the amount of air that had passed through the tube.

A rate of 1 liter per minute was used because tests in the laboratory showed that such gases as ammonia, methyl amine, acetone, alcohol, and hydrogen sulfide were completely condensed in the first fourth of the intake side of the tube and no traces could be detected coming from the outlet end.

At the end of about 45 hours the rubber tubes were disconnected and the condenser tube was tightly stoppered and taken to the laboratory in the box containing the remaining dry ice. The tube was then taken out of the box and the frozen odor and moisture were placed in a wide-mouthed bottle, properly fitted with a cork collar through which was inserted a Fair osmoscope (*1*). The ice was allowed to melt and the liquid was shaken to saturate the air in the bottle with the odor of the liquid.

By setting the instrument at its highest reading, a sniff through the nosepiece will draw in one volume of odor-laden air from the bottle and 63 volumes of fresh air. The odor will thus be diluted 1 to 64 or 2^{-6}. If the odor is not sensed in this dilution, its pO value (relative odor value, or intensity of odor) is less than pO 6. In this case the setting is changed to its next higher position, and so on until the point is reached where the odor is barely detectable, which reading is the relative odor value (*1*).

Thus a new and very practical use has been found for the osmoscope. Previously it had been used to determine the odor value of water, but now it can be used to determine this value in air by first freezing out the water and odor in the air. After determining the relative odor value, the total amount of condensate was reserved for identification tests and quantitative determinations of the detectable odorous substances.

With a practical method for determining the intensity of odor it is hardly necessary to attempt a thorough chemical analysis. The wide variety and structural complexity of substances which impart odor render direct quantitative determinations of little significance. In Table I only four substances were determined and these only because they could be detected and were known to exist. They serve only as a check on the relative odor value, for certainly their combined odor intensity is only a small percentage of the total.

Removal of Odor

Many methods for removing odors have been tried, such as various sprays which at best give only temporary relief by masking the odor. Ozonators must be accurately controlled in order to avoid increasing the concentration of ozone to the point where it becomes toxic. Ozone deodorizes by oxidizing, but the odor of some substances is more unpleasant after oxidation than before unless oxidation is complete. The odor of ozone itself is unpleasant to most individuals. Electrostatic precipitators become inactive and act as a source of odor after the plates have become coated with the precipitated material.

Activated carbon was chosen as the material to reduce effectively the odor concentration in the car. After considerable experimental work on the odor-adsorbing power and pressure-drop from one side of a filter to another, a decision was reached to use for this work Nuchar (manufactured by the Industrial Chemical Sales Co. of New York, N. Y., which kindly furnished all activated carbon used in this work). The gas-adsorbing power of this carbon is about 85 per cent of that of the more expensive nutshell carbon and it costs about one-eighth as much. It is extremely porous, thus offering a very large exposed surface to odor-laden air and very little resistance to the flow of air in the ordinary ventilating ducts.

For experimental purposes only, eleven V-type screen filters were constructed. Each filter contained four V's and there was a 0.5-inch space between the screens. The filters were filled with Nuchar and installed in the car in such a way that all air coming into it passed through them. The pressure drop at 200 feet per minute was 0.10 inch of water. After a round trip between Chicago and New York, individuals who entered the car and tested the air by smelling reported no objectionable odor. Previous to the installation of carbon odor-filters, these same individuals had stated that the odor was objectionable.

It is regretted that these experiments could not be carried on for a longer period. The original plan was to make two tests on the same day, one before the installation of odor-filters and another while the carbon was new. Subsequent tests were to be made at intervals of 2, 4, 6 months, etc., until the adsorptive power of the carbon had decreased to the point where the odor was again objectionable. No test could be made while the carbon was new, because of inclement weather which caused an undue amount of ice to freeze on the generator belts. Changes in the ventilating ducts necessitated removing the filters at the end of 4 months while the carbon was still functioning efficiently. Therefore, it is impossible to state what the life of the carbon would have been under these conditions.

Table I gives the results of tests before and after installation of activated carbon filters.

Table I. Tests on Recirculated Air

	Unfiltered	Filtered through Activated Carbon: After 2 months' use	Filtered through Activated Carbon: After 4 months' use
Relative odor value (of 200 cu. ft.)	40	2	10
Ammonia (NH_3), p. p. m.	0.06	0.004	0.02
Nitrite (NO_2), p. p. m.	0.0008	0.00003	0.00013
Alcohol (C_2H_5OH), p. p. m.	0.3	0.015	0.09
Phenolic bodies, p. p. m.	0.006	0.0004	0.002
Odor removed, per cent	0	95	75

For convenience of comparison, the relative odor value was either determined or calculated on 200 cubic feet of air, the amount which actually passed through the apparatus. The value of 40 was calculated from a reading of 4 obtained on an aliquot representing 20 cubic feet; 2 was the value of the whole condensate from 200 cubic feet; and the value of 10 was calculated from a reading of 2 obtained from an aliquot representing 40 cubic feet.

The ammonia and nitrite present are apparently derived from one or both of two sources: the decomposition of other nitrogenous products, or the effects of oxidation and ultraviolet rays on the nicotine in tobacco smoke as found by Gant (*2*). The absence of nicotine and sulfur compounds may be accounted for by the ease with which they are oxidized in such thin films, or they may escape detection because of the minute degree of concentration. The alcohol is undoubtedly due to

the consumption of alcoholic beverages by passengers. The phenolic bodies are apparently derived from the smoke of the locomotive. The condensate also had a distinct petroleum-like odor, which may be accounted for by the fact that the train passed through a district where large oil refineries were located, or it may have been due to lubricating oil on machinery in and about the car.

Summary

A freezing-out method has been developed for determining the concentration of odors in air-conditioned structures.

Solid carbon dioxide, contained in a properly insulated box, was the refrigerant used to freeze out moisture and odor in an efficient condenser tube through which measured amounts of air were drawn at a low velocity. Liquid air was not used on account of the expense and danger involved.

The osmoscope was employed to determine the relative odor value of the condensate by the air-dilution method. Values obtained in this manner were verified by quantitative chemical determinations and also by individuals who entered the car and tested the air by smelling.

Activated carbon was demonstrated to be a safe, very efficient, and economical means of removing the odor in an air-conditioned structure.

Literature Cited

(1) Fair and Wells, *J. Am. Water Works Assoc.*, **26**, 1670–7 (1934).
(2) Gant, *J. Pharmacol.*, 49, 408–27 (1933).

Received October 17, 1936.

An Air-Bomb Aging Test for Tread Compounds

E. W. BOOTH AND D. J. BEAVER
Monsanto Chemical Company, The Rubber Service Laboratories Division, Nitro, W. Va.

THE comparative age-resisting properties of tire tread compounds are determined in the laboratory by either oxygen-bomb or Geer-oven aging tests. The conditions under which these tests are carried out are standardized and from their results reliable predictions are made concerning the natural aging life of the tread compounds.

A few years ago oxygen-bomb aging tests, comparing first-quality tread compounds, could be satisfactorily carried out in from 39 to 48 hours, in which time the tread compound lost about 50 per cent of its original tensile. Today, largely because of the development of better antioxidants and organic accelerators, oxygen-bomb aging tests carried out under the same conditions require between 4 and 10 days to cause the same percentage loss in tensile, and the time necessary to carry out a Geer-oven aging test has been correspondingly increased. Therefore it is very desirable to develop a shorter laboratory aging test which can be correlated with the oxygen bomb or the Geer oven and which should be indicative of natural aging results.

The use of the air bomb as a laboratory method of carrying out aging tests has been previously suggested (*1*, *2*). However, papers recognized that the conditions therein employed were too severe to permit reliable comparisons of the aging properties of tread compounds.

Experimental Procedure

The procedure recommended by the American Society for Testing Materials, designated as D412-35T, was followed in carrying out the milling, vulcanizing, and testing of the rubber compounds described in this paper, and the D428-35T recommendations were followed in carrying out the oxygen-bomb and Geer-oven aging tests, with the exception that in both cases only two test pieces were broken instead of three, and in the case of the oxygen-bomb and Geer-oven aging tests one-half of the usual press-cured sheet was employed instead of the usual dumbbell test pieces.

The air-bomb aging conditions referred to as being too severe consist in placing the usual dumbbell test piece in a rack, and elongating 50 per cent; the rack is then placed in the air bomb, and a temperature of 260° F. (126.7° C.) and an air pressure of 100 pounds per square inch (7 kg. per sq. cm.) are maintained for the duration of the test. These conditions were employed in carrying out the first series of tests in which the ratio of sulfur to rubber was varied. The results are shown in Figure 1.

In the second series of tests the elongation was varied between 0 and 50 per cent, the air pressure between 50 and 100 pounds per square inch (3.5 and 7 kg. per sq. cm.), and the temperature between 210° and 260° F. (98.9° and 126.7° C.). Only a single variation was made in any one test and the duration of the test was kept constant at 5 hours, as shown in Figure 2. From the data obtained in these as well as additional tests, the following conditions were adopted as more suitable for the comparing of tread compounds: elongation, 0; pressure, 50 pounds per square inch (3.5 kg. per sq. cm.); temperature, 220° F. (104.4° C.); and time, 10 hours. These "modified" conditions were employed in carrying out all the later tests shown.

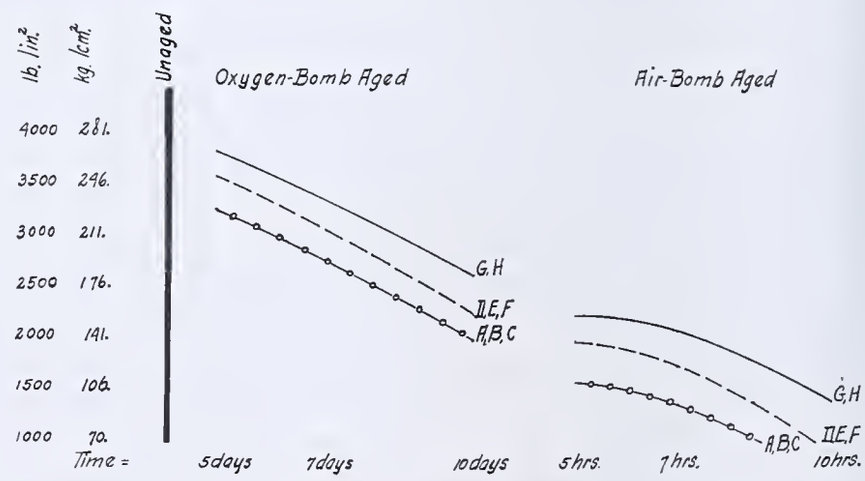

FIGURE 1. AGING TESTS

Cure, 75 minutes at 274° F. (134° C.).
Base stock: smoked sheets, 100.00; carbon black, 50.0; zinc oxide, 5.0; stearic acid, 3.0; pine tar, 2.0; antioxidant, 1.5.

Added to base stock:

	Sulfur	Accelerator		Sulfur	Accelerator
A	2.25	1.25	*E*	1.25	2.20
B	2.00	1.50	*F*	1.00	2.40
C	1.75	1.75	*G*	0.80	2.80
D	1.50	2.00	*H*	0.60	2.80

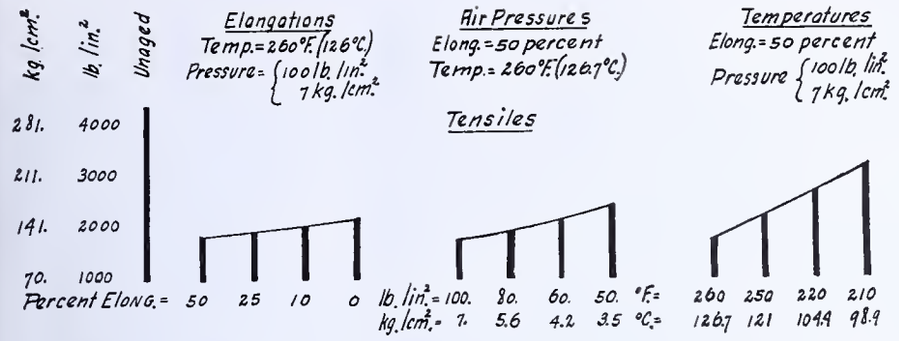

FIGURE 2. EFFECT OF VARIATIONS IN CONDITIONS OF AIR-BOMB AGING

Cure, 60 minutes at 274° F. (134° C.) Aging time, 5 hours. Base stock: smoked sheets, 100.0; carbon black, 50.0; zinc oxide, 5.0; sulfur, 2.75; stearic acid, 3.0; pine tar, 2.0; accelerator, 1.25; antioxidant, 1.50.

In the third series of tests the oxygen concentration was varied by dilution with nitrogen. The usual dumbbell test pieces were employed here and the end point of the test was the time necessary to cause a loss of 40 per cent in tensile.

Discussion

The results of previous laboratory comparisons of heat-resisting inner-tube compounds, which were carried out in the air bomb, established the theory that a low ratio of sulfur to rubber was necessary (*1*). Therefore the first series of tests in this study was carried out to determine whether or not tread compounds with low sulfur ratios aged better than tread compounds containing normal sulfur ratios and to present data to show that these air-bomb aging conditions were too severe to permit reliable comparisons of tread compounds. The results are shown in Figure 1.

It is known that tread compounds such as those shown in Figure 1 are not practical because of their poor resistance to flex cracking and abrasion. The unaged results are not shown, but to maintain the same rate of cure for all the compounds it was necessary to increase the accelerator ratio as the sulfur ratio was decreased. A range of cures was carried out and aging tests were made on several cures. However, the 75-minute cure at 274° F. (134° C.) was chosen to make up this chart because it was the optimum cure. The unaged tensiles of all the compounds were the same within the usual laboratory error of ±5 per cent. The unaged modulus figures varied between about 3000 pounds per square inch (211 kg. per sq. cm.) in the case of the *A* compound to about 2300 pounds per square inch (161.7 kg. per sq. cm.) in the *H* compound. Figure 1 represents the results of the *A*, *B*, and *C* compounds as being alike, but actually the results shown are the averages of the three results. The same is true, in the case of the *D*, *E*, and *F* and the *G* and *H* compounds. This was done in order to present a clearer picture.

The results show that reducing the sulfur ratio has improved the age-resisting properties of the tread compounds in the case of both the air-bomb and the oxygen-bomb aging, the improvement being greater in the case of the air bomb. However, even the *G* and *H* compounds show a loss of about 50 per cent in tensile due to 7 hours' aging in the air bomb, whereas previous tests showed that a heat-resisting inner-tube compound lost only about 30 per cent in tensile through aging 18 hours under the same conditions (*1*). Therefore, these air-bomb aging conditions are too severe, and since the main difference between the composition of the heat-resisting inner-tube compounds and tread compounds *G* and *H* is the use of P33 black and carbon black, respectively, the conclusion seems obvious that carbon black does not age as well as some of the other compounding ingredients. Schoenfeld (*3*) recognized the relatively poor aging properties of carbon black and attributed them to oxygen or oxygen compounds in the carbon black.

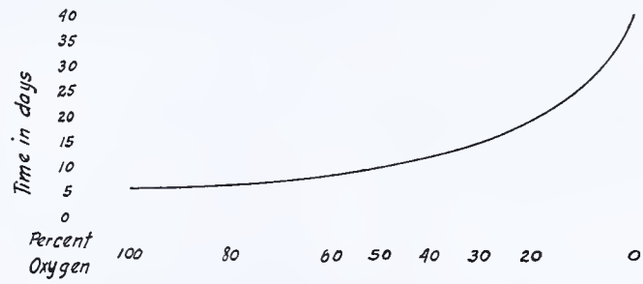

FIGURE 3. EFFECT OF OXYGEN CONCENTRATION

Same base stock as in Figure 2. End point, loss of 40 per cent of original tensile. Total pressure, 300 pounds per square inch (21.1 kg. per sq. cm.). Temperature, 158° F. (70° C.). Oxygen concentration varied from 0 to 100 per cent.

The second series of tests was carried out to determine which of the air-bomb aging conditions had the greatest effect on the results. The data shown in Figure 2 indicate that the temperature employed has the greatest effect. These results, together with a few confirming tests, led to the adoption of the "modified" air-bomb aging conditions given above.

The compound employed here and in all the later tests is probably higher in accelerator and antioxidant ratio than is usual in commercial compounds. The accelerator employed in all the compounds in this paper is dibenzothiazyldimethylthiol urea and the antioxidant employed is a ketone–primary aromatic amine reaction product. This compound has an excellent range of cure, showing no indications of overcure up to the 105-minute cure. The abrasion index and flex cracking resistance are excellent. The 400 per cent modulus figure of the cure shown was about 3200 pounds per square inch (225 kg. per sq. cm.) and the tensile was about 4400 pounds per square inch (309 kg. per sq. cm.).

In the third series of tests the oxygen concentration was

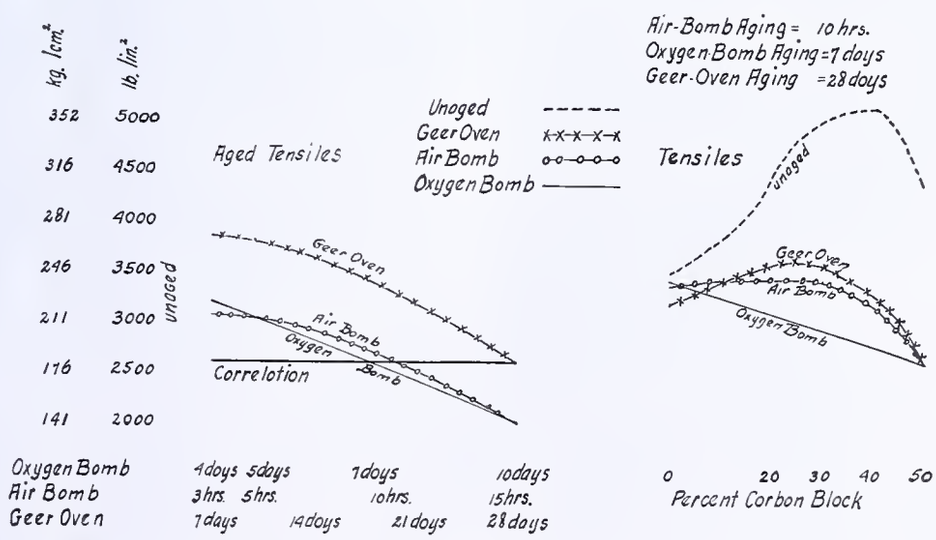

FIGURE 4. COMPARISON OF OXYGEN-BOMB, AIR-BOMB, AND GEER-OVEN AGING

Left, base stock, same as in Figure 2
Right, same stock except carbon black varied from 0 to 50 parts
Cure, 60 minutes at 274° F.(134° C.)

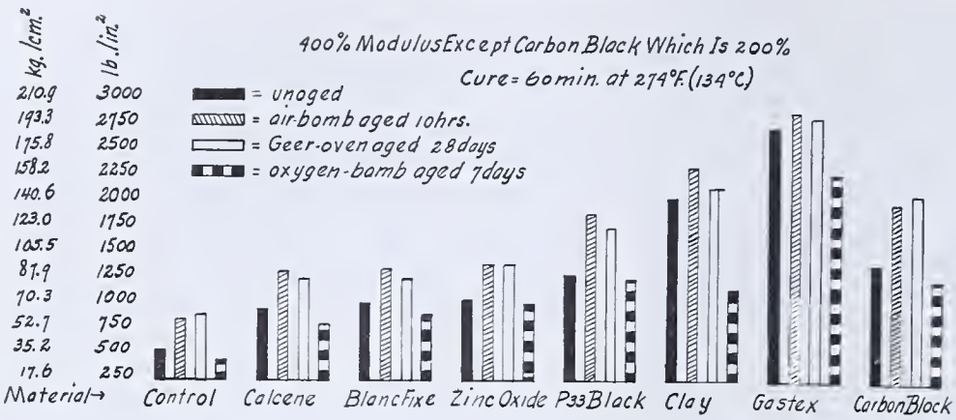

FIGURE 5. EFFECT OF COMPOUNDING INGREDIENTS

Base stock, smoked sheets, 100.00; zinc oxide, 5.0; sulfur, 2.75; stearic acid, 3.0; pine tar, 2.0; accelerator, 1.25; antioxidant, 1.50.

Added to base stock:
A, control
B, calcene ($CaCO_3$ plus stearic acid), 50.0
C, blanc fixe, 50.0
D, zinc oxide, 50.0
E, P33 black (soft black), 50.0
F, clay, 50.0
G, Gastex (soft black), 50.0
H, carbon black, 50.0

varied in an attempt to obtain data which would explain the differences between the results of the oxygen-bomb and the Geer-oven aging tests and perhaps suggest better conditions under which to carry out comparisons of tread compounds. The results are shown in Figure 3. The only obvious conclusions that can be made from these results are that a temperature higher than 158° F. (70° C.) is necessary materially to shorten the time necessary to carry out aging tests, even though the oxygen concentration is 100 per cent.

In the fourth series of tests a comparison was made of air-bomb, oxygen-bomb, and Geer-oven aging, and the results are shown in Figure 4. The "modified" air-bomb aging conditions were employed in this comparison. The results show a correlation of the three aging methods. A horizontal line was drawn which represents a loss of 40 per cent in tensile (indicated as "correlation") and shows that about 10 hours' aging in the air bomb has brought about the same loss of tensile as about 7 days' aging in the oxygen bomb or 28 days' aging in the Geer oven. Realizing that many more tests must be carried out before an exact correlation of the three aging methods can be made, this apparent correlation is shown to emphasize the shorter length of time necessary to carry out air-bomb aging tests and to explain the reason for adopting these various times in carrying out later comparisons.

Also shown in Figure 4 are the results of tests to determine whether the same correlation held for various amounts of carbon black. As the carbon black content is increased from 0 to 50 per cent based on the rubber content, the unaged tensile increases rapidly until about 40 per cent of carbon black is present. At this point the tensile decreases rapidly. The air-bomb and Geer-oven aging also show a slight initial increase in tensile as the carbon black content is increased with a later decrease, but nevertheless the percentage loss in tensile increases progressively as the carbon black content is increased. The oxygen-bomb aging shows no increase as the carbon black content is increased. These results show that the correlation is not exact for these various aging methods when different amounts of carbon black are employed. However, the air-bomb and Geer-oven aging are probably within the limit of experimental error.

In the last series of tests a comparison was made of the effect of several compounding ingredients on the aging of rubber compounds. These results are shown in Figures 5 and 6. With carbon black it was necessary to show the 200 per cent modulus figures, because in the Geer-oven and air-bomb aging the elongations were less than 400 per cent. Figure 5 shows the modulus results unaged and after aging in the air bomb, oxygen bomb, and Geer oven. Each compound shows an increase of the aged modulus over the unaged modulus for air-bomb and Geer-oven results, while the modulus decreases after oxygen-bomb aging. Figure 6 shows the tensil eresults obtained with the same compounds. These results show definitely that, irrespective of pigment used, the "modified" air-bomb aging conditions parallel the Geer-oven results, but show considerable variation from the oxygen-bomb results. In other words, the higher temperature employed for a shorter length of time in the air bomb has practically the same effect on continuing vulcanization and oxygen deterioration as is obtained in the Geer-oven tests.

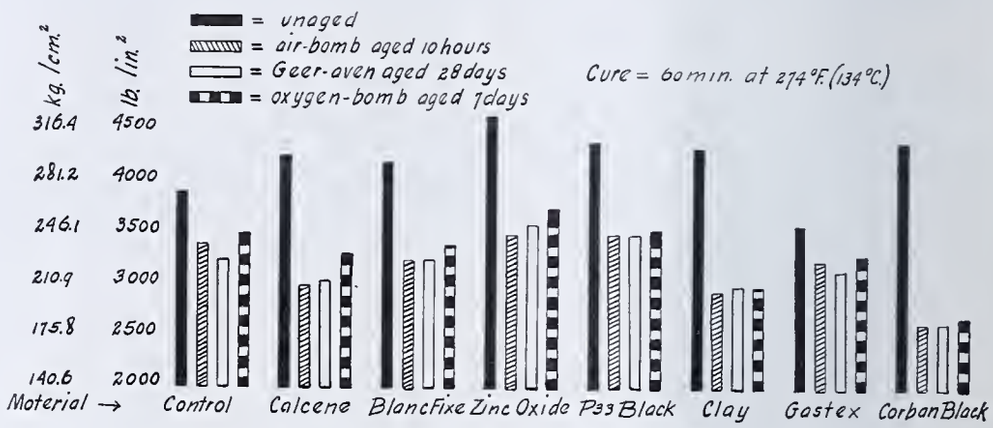

FIGURE 6. TENSILE RESULTS WITH COMPOUNDS IN FIGURE 5

Conclusion

Data here presented demonstrate that study of tread compounds by the air-bomb aging method must include modifications of the conditions followed in the comparison of inner-tube compounds.

Data are presented which show the effect of air pressure, temperature, elongation, oxygen concentration, time, and pigment variation on the aging of rubber compounds.

The air-bomb aging conditions suggested for the study of tread compounds, consisting in testing at 0 elongation, 50 pounds air pressure per square inch (3.5 kg. per sq. cm.), and 220° F. (104.4° C.) temperature, have provided a shorter laboratory test which parallels the Geer-oven aging test in its effect on carbon black compounds.

Literature Cited

(1) Booth, E. W., IND. ENG. CHEM., 24, 555 (1932).
(2) Booth, E. W., *Rubber Age* (N. Y.), 34, 268–71 (1934).
(3) Schoenfeld, F. K., IND. ENG. CHEM., 27, 571 (1935).

RECEIVED September 18, 1936. Presented before the Division of Rubber Chemistry at the 92nd Meeting of the American Chemical Society, Pittsburgh, Pa., September 7 to 11, 1936.

Analysis of Light Petroleum Fractions

S. S. KURTZ, JR.,[1] AND C. E. HEADINGTON
The Atlantic Refining Company, Philadelphia, Pa.

This paper describes a method for the determination of conjugated diolefins, cyclic monoölefins, noncyclic monoölefins, paraffins, naphthenes or saturated cyclic compounds, and aromatics, in light petroleum fractions boiling from 40° to 200° C.

The method involves chemical treatment of the material with maleic anhydride and sulfuric acid, fractionation into 30° C. cuts, and measurement of density and refractive index of the cuts. Calculation of results depends on graphical methods and is bettered by use of a new constant, the refractivity intercept.

IT IS OFTEN helpful in industrial research to have information on the chemical nature of the major types of hydrocarbons occurring in petroleum mixtures, even though the determination of individual hydrocarbons is impracticable. Such a classification is less satisfactory for the higher molecular weight fractions where a large proportion of the molecules undoubtedly is composed of several hydrocarbon types, but is quite suitable for the lighter fractions where the molecules must be relatively simple in structure.

The authors have combined chemical and physical methods to yield an analytical method for the estimation of the following hydrocarbon types in petroleum fractions boiling from 40° to 200° C.: conjugated diolefins; cyclic olefins; noncyclic olefins; aromatics; naphthenes or saturated cyclic compounds; and paraffins.

In this classification aromatic compounds by definition are those which contain one or more aromatic rings, and the naphthenes are those containing a 5 or 6 carbon-saturated ring structure. The terms "paraffin" and "olefin" are used in the conventional sense subject to the above limitations. Cyclic olefins, however, refer only to compounds wherein the double bond is located within the ring structure.

Refractivity Intercept

In this method there is used a new physical constant called the refractivity intercept. This constant was originally developed in these laboratories and is described in detail by Kurtz and Ward (*3*). Its nature, therefore, will be but briefly treated here. From Figure 1 it is evident that for a given structural type of hydrocarbons the refractive index varies linearly with the density. The refractivity intercept is the intercept constant b in the equation:

$$\text{Refractive index} = 0.5 \text{ density} + b$$

Hydrocarbon types differ, in this respect, only in the numerical value of b and are therefore distinguishable by the value of this constant. These values for a number of hydrocarbon types are given in Table I.

TABLE I. REFRACTIVITY INTERCEPT

Hydrocarbon Type	Refractivity Intercept[a] $\left(\text{Refractive Index} - \frac{\text{Density}}{2}\right)$
Paraffins	1.0461
Naphthenes	1.0400
Aromatics	1.0627
Cyclic monoölefins	1.0461
Noncyclic monoölefins	1.0521
Cyclic conjugated diolefins	1.0643
Noncyclic conjugated diolefins	1.0877
Cyclic nonconjugated diolefins	Insufficient data
Noncyclic nonconjugated diolefins	1.0592

[a] Numerical values from Kurtz and Ward (*3*).

Graphical Analysis

The use of the refractivity intercept in the general analytical method depends on the graphical comparison of the density and the refractivity intercept of a chemically treated or untreated fraction with those of various hydrocarbon types of the same boiling range. For this purpose the density and refractivity intercept of the unknown are plotted with like points for not more than three hydrocarbon types of the same boiling range as, and present in, the unknown as illustrated in Figure 2. The refractivity intercept values for the hydrocarbon types are taken from Table I, while the density values are taken from Figures 3 and 4 where average density and

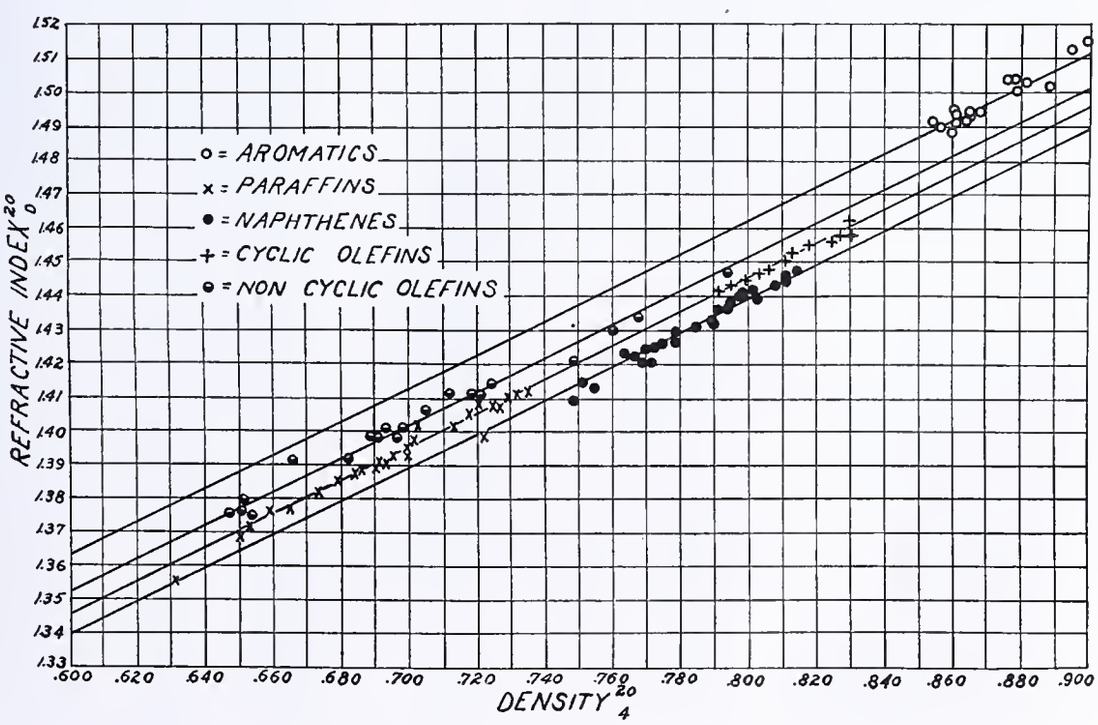

FIGURE 1. ORIGIN OF REFRACTIVITY INTERCEPT

[1] Present address, Sun Oil Co., Marcus Hook, Pa.

Table II. Boiling Points and Densities of Noncyclic Olefins, Cyclic Olefins, and Aromatics

Compound	Formula	Boiling Point at 760 mm., ° C.	Density $\frac{20°}{4}$
Noncyclic Olefins			
1-Pentene	C_5H_{10}	40	0.647
2-Pentene	C_5H_{10}	36	0.651
2-Methyl-2-butene	C_5H_{10}	38	0.666
1-Hexene	C_6H_{12}	64	0.683
2,3-Dimethyl-1-butene	C_6H_{12}	73	0.712
3,3-Dimethyl-1-butene	C_6H_{12}	41	0.653
2,3-Dimethyl-2-butene	C_6H_{12}	74	0.708
3-Methyl-1-pentene	C_6H_{12}	62	0.682
3-Methyl-2-pentene	C_6H_{12}	70	0.698
2-Methyl-2-pentene	C_6H_{12}	67	0.692
2-Ethyl-1-butene	C_6H_{12}	67	0.6914
1-Heptene	C_7H_{14}	97	0.702
3-Ethyl-2-pentene	C_7H_{14}	98	0.721
2,3-Dimethyl-2-pentene	C_7H_{14}	95	0.719
4,4-Dimethyl-2-pentene	C_7H_{14}	84	0.688
3,3-Dimethyl-1-pentene	C_7H_{14}	77	0.696
1-Octene	C_8H_{16}	123	0.720
4,4-Dimethyl-2-hexene	C_8H_{16}	106	0.720
2,2-Dimethyl-3-hexene	C_8H_{16}	100	0.705
Diisobutylene	C_8H_{16}	101	0.720
4-Methyl-3-heptene	C_8H_{16}	120	0.724
2-Nonene	C_9H_{18}	150	0.752
4-Methyl-4-octene	C_9H_{18}	139	0.748
1-Decene	$C_{10}H_{20}$	172	0.748
2,3-Dimethyl-2-octene	$C_{10}H_{20}$	162	0.748
2-Methyl-5-ethyl-5-heptene	$C_{10}H_{20}$	138	0.745
Diamylene	$C_{10}H_{20}$	156	0.768
1-Undecene	$C_{11}H_{22}$	188	0.763
2-Undecene	$C_{12}H_{24}$	193	0.761
Triisobutylene	$C_{12}H_{24}$	175	0.760
Tetraisobutylene	$C_{16}H_{32}$	250	0.794
Cyclic Olefins			
Cyclopentene	C_5H_{10}	44	0.776
Cyclohexene	C_6H_{12}	83	0.810
1,2-Dimethylcyclopentene	C_7H_{14}	103	0.792
2-Ethylcyclopentene	C_7H_{14}	108	0.796
1-Methylcyclohexene	C_7H_{14}	110	0.809
2-Methylcyclohexene	C_7H_{14}	110	0.810
3-Methylcyclohexene	C_7H_{14}	104	0.805
4-Methylcyclohexene	C_7H_{14}	103	0.799
6-Methylcyclohexene	C_7H_{14}	103	0.799
1-Ethylcyclohexene	C_8H_{16}	136	0.826
1,2-Dimethylcyclohexene	C_8H_{16}	135	0.826
2,4-Dimethylcyclohexene	C_8H_{16}	127	0.803
1,4-Dimethylcyclohexene	C_8H_{16}	127	0.800
1,5-Dimethylcyclohexene	C_8H_{16}	127	0.802
4,6-Dimethylcyclohexene	C_8H_{16}	126	0.798
5,5-Dimethylcyclohexene	C_8H_{16}	119	0.803
1-*n*-Propylcyclohexene	C_9H_{18}	156	0.824
1-Isopropylcyclohexene	C_9H_{18}	153	0.828
1-Ethyl-2-methylcyclohexene	C_9H_{18}	157	0.830
2-Ethyl-4-methylcyclohexene	C_9H_{18}	152	0.813
1-Ethyl-4-methylcyclohexene	C_9H_{18}	152	0.812
1-Ethyl-3-methylcyclohexene	C_9H_{18}	149	0.813
1,5-Trimethylcyclohexene	C_9H_{18}	129	0.800
2,5-Trimethylcyclohexene	C_9H_{18}	140	0.804
1,6-Trimethylcyclohexene	C_9H_{18}	148	0.824
1,2,6-Trimethylcyclohexene	C_9H_{18}	150	0.828
2,4,6-Trimethylcyclohexene	C_9H_{18}	140	0.800
2,4,5-Trimethylcyclohexene	C_9H_{18}	145	0.805
1-*n*-Butylcyclohexene	$C_{10}H_{20}$	182	0.826
1-Propyl-2-methylcyclohexene	$C_{10}H_{20}$	177	0.830
2-Propyl-4-methylcyclohexene	$C_{10}H_{20}$	173	0.814
1-Propyl-4-methylcyclohexene	$C_{10}H_{20}$	174	0.813
4-Isopropyl-1-methylcyclohexene	$C_{10}H_{20}$	168	0.812
1-*n*-Amylcyclohexene	$C_{11}H_{22}$	204	0.829
1-Isoamylcyclohexene	$C_{11}H_{22}$	195	0.824
1-Butyl-2-methylcyclohexene	$C_{11}H_{22}$	198	0.831
2-Butyl-4-methylcyclohexene	$C_{11}H_{22}$	195	0.820
1-Butyl-4-methylcyclohexene	$C_{11}H_{22}$	197	0.816
2-Isobutyl-4-methylcyclohexene	$C_{11}H_{22}$	185	0.810
1-Amyl-2-methylcyclohexene	$C_{11}H_{22}$	219	0.832
Aromatics			
Benzene	C_6H_6	80	0.879
Methylbenzene	C_7H_8	111	0.866
Ethylbenzene	C_8H_{10}	134	0.868
1,2-Dimethylbenzene	C_8H_{10}	144	0.879
1,3-Dimethylbenzene	C_8H_{10}	139	0.864
1,4-Dimethylbenzene	C_8H_{10}	138	0.861
1,2-Methyl-ethylbenzene	C_9H_{12}	162	0.882
1,3-Methyl-ethylbenzene	C_9H_{12}	163	0.867
1,4-Methyl-ethylbenzene	C_9H_{12}	162	0.862
1,3,5-Trimethylbenzene	C_9H_{12}	162	0.863
1,2,4-Trimethylbenzene	C_9H_{12}	169	0.876
1,2,3-Trimethylbenzene	C_9H_{12}	177	0.895
Propylbenzene	C_9H_{12}	156	0.862
Isopropylbenzene	C_9H_{12}	155	0.864
Butylbenzene	$C_{10}H_{14}$	180	0.864
Isobutylbenzene	$C_{10}H_{14}$	167	0.854
sec-Butylbenzene	$C_{10}H_{14}$	175	0.860
tert-Butylbenzene	$C_{10}H_{14}$	169	0.867
1,2-Diethylbenzene	$C_{10}H_{14}$	185	0.866
1,3-Diethylbenzene	$C_{10}H_{14}$	182	0.860
1,4-Diethylbenzene	$C_{10}H_{14}$	183	0.865
1,2-Methyl-isopropylbenzene	$C_{10}H_{14}$	157	0.856
1,3-Methyl-isopropylbenzene	$C_{10}H_{14}$	175	0.860
1,4-Methyl-isopropylbenzene	$C_{10}H_{14}$	175	0.857
1,2,3,4-Tetramethylbenzene	$C_{10}H_{14}$	204	0.901
1,3,5-Triethylbenzene	$C_{12}H_{18}$	218	0.863
1,2,4-Triethylbenzene	$C_{12}H_{18}$	218	0.882

boiling point have been correlated for hydrocarbons of several types. The basic data for Figures 3 and 4 are given in Tables II and III.

Assume the refractive index, refractivity intercept, and density of hydrocarbons to be additive on a volume per cent basis. Then if the points A, B, and C in Figure 2 represent three hydrocarbon types and a point D lying within the triangle represents the unknown which consists solely of A, B, and C, it follows that the composition of D may be computed from the geometrical properties of the triangle. In the special case of a binary mixture, say of A and B, D will lie on the line AB and its composition is apparent.

Referring to Figure 2, the composition in volume per cent of the unknown D would be found by comparing the length of the lines indicated in the equations below.

$$A = \frac{DE}{EA} 100$$

$$B = \frac{CE}{BC} (100 - A)$$

$$C = 100 - A - B$$

The assumption of the additivity of the refractive index and density of hydrocarbons on a volume per cent basis is justified by the work of MacFarlane and Wright (*4*). It follows that the refractivity intercept is therefore also additive.

It should be emphasized that even though the refractivity intercept is independent of boiling point, the points A, B, and C on the graphical analysis diagram will vary for different boiling points because of the corresponding change in density illustrated in Figures 3 and 4. Because of this variation, graphical analysis is made only on fractionated cuts of about 30° C. in boiling range. These analyses are made on different diagrams for each cut and the composition of the original sample is computed from the composition of the cuts.

Chemical Treatment

Analysis by the above means alone is limited to three components, and is further limited by the fact that the three components must form a triangle on the graphical analysis diagram. In order to use this method of analysis on mixtures of more than three components, resort is made to chemical treatment which will segregate or remove three or less of those hydrocarbon types which can be analyzed graphically. When chemical treatment leaves such a ternary mixture, its refractive index and density are measured and its composition is determined graphically. On the other hand, when no more than three hydrocarbon types are removed from the sample by the treatment, the refractive index and density of the ternary mixture removed may be calculated from those properties and the volume of the sample before and after treatment. Its composition may then be determined graphi-

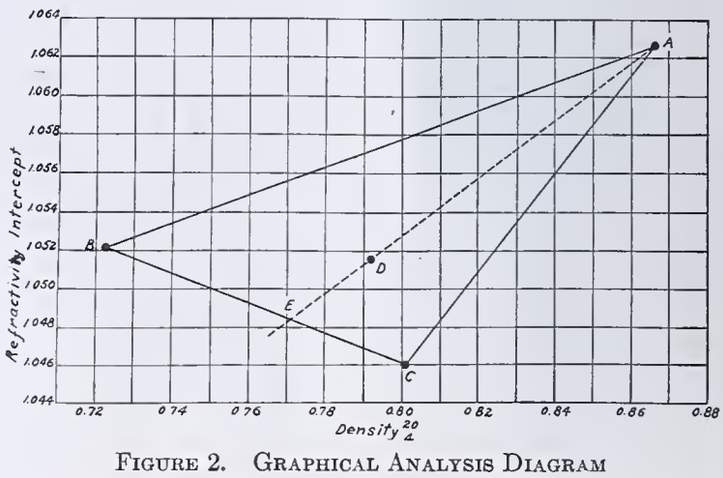

Figure 2. Graphical Analysis Diagram

cally. It is thus seen that this method does not require the isolation of a ternary mixture of hydrocarbon types in order to obtain knowledge of the composition of the mixture.

The principles of the chemical treatment are given below and the details are discussed later in the procedure.

Maleic Anhydride Treatment. Removal of conjugated diolefins is brought about by treatment of the sample with maleic anhydride according to the method of Diels and Alder (*1*). Table IV gives the results of a typical treatment and illustrates how the reaction is complete after 1 hour of treatment with 10 per cent of maleic anhydride at 100° C.

Table III. Boiling Points and Densities of Paraffins and Naphthenes

Compound	Formula	Boiling Point at 760 mm., ° C.	Density $\frac{20°}{4}$
	Paraffins		
n-Pentane	C_5H_{12}	36	0.631
2-Methylbutane	C_5H_{12}	28	0.621
n-Hexane	C_6H_{14}	69	0.6595
2-Methylpentane	C_6H_{14}	60	0.6542
3-Methylpentane	C_6H_{14}	63	0.6647
2,2-Dimethylbutane	C_6H_{14}	50	0.6498
2,3-Dimethylbutane	C_6H_{14}	58	0.6613
n-Heptane	C_7H_{16}	98	0.6836
2-Methylhexane	C_7H_{16}	90	0.6789
3-Methylhexane	C_7H_{18}	92	0.6870
3-Ethylpentane	C_7H_{16}	93	0.6984
2,2-Dimethylpentane	C_7H_{16}	79	0.6737
2,3-Dimethylpentane	C_7H_{18}	90	0.6952
2,4-Dimethylpentane	C_7H_{16}	81	0.6745
3,3-Dimethylpentane	C_7H_{16}	86	0.6934
2,2,3-Trimethylbutane	C_7H_{16}	81	0.6900
n-Octane	C_8H_{16}	125	0.702
2,2-Dimethylhexane	C_8H_{18}	107	0.6953
2-Methylheptane	C_8H_{18}	116	0.6985
3-Methylheptane	C_8H_{18}	122	0.707
4-Methylheptane	C_8H_{18}	118	0.722
3-Ethylhexane	C_8H_{18}	119	0.713
2,3-Dimethylhexane	C_8H_{18}	114	0.720
2,4-Dimethylhexane	C_8H_{18}	109	0.703
2,5-Dimethylhexane	C_8H_{18}	109	0.696
3,4-Dimethylhexane	C_8H_{18}	117	0.721
2-Methyl-3-ethylpentane	C_8H_{16}	114	0.704
2,2,3-Trimethylpentane	C_8H_{16}	111	0.717
2,4,4-Trimethylpentane	C_8H_{18}	99	0.691
n-Nonane	C_9H_{20}	150	0.718
3-Methyloctane	C_9H_{20}	143	0.719
4-Methyloctane	C_9H_{20}	142	0.727
4-Ethylheptane	C_9H_{20}	139	0.737
2,4-Dimethylheptane	C_9H_{20}	133	0.716
2,5-Dimethylheptane	C_9H_{20}	136	0.714
2,6-Dimethylheptane	C_9H_{20}	132	0.707
2,2,5-Trimethylhexane	C_9H_{20}	126	0.707
n-Decane	$C_{10}H_{22}$	174	0.727
2-Methylnonane	$C_{10}H_{22}$	160	0.724
3-Methylnonane	$C_{10}H_{22}$	167	0.735
5-Methylnonane	$C_{10}H_{22}$	166	0.732
4-Propylheptane	$C_{10}H_{22}$	162	0.736
2,6-Dimethyloctane	$C_{10}H_{22}$	161	0.729
2,7-Dimethyloctane	$C_{10}H_{22}$	160	0.722
3,6-Dimethyloctane	$C_{10}H_{22}$	161	0.730
2,2,6-Trimethylheptane	$C_{10}H_{22}$	152	0.721
Undecane	$C_{121}H_{24}$	195	0.741
Dodecane	C_1H_{28}	216	0.749
	Naphthenes		
Cyclopentane	C_5H_{10}	50	0.754
Cyclohexane	C_6H_{12}	81	0.779
Methylcyclopentane	C_6H_{12}	73	0.750
Methylcyclohexane	C_7H_{14}	100	0.767
1,1-Dimethylcyclopentane	C_7H_{14}	88	0.755
1,2-Dimethylcyclopentane	C_7H_{14}	93	0.751
1,1-Dimethylcyclohexane	C_8H_{16}	120–125	0.781
1,2-Dimethylcyclohexane	C_8H_{16}	127	0.790
1,3-Dimethylcyclohexane	C_8H_{18}	121	0.772
1,4-Dimethylcyclohexane	C_8H_{16}	123	0.775
Ethylcyclohexane	C_8H_{16}	130	0.785
n-Propylcyclohexane	C_9H_{16}	155	0.791
Isopropylcyclohexane	C_9H_{18}	152	0.797
1,2-Methylethylcyclohexane	C_9H_{18}	153	0.803
1,3-Methylethylcyclohexane	C_9H_{18}	149	0.789
1,4-Methylethylcyclohexane	C_9H_{16}	151	0.789
1,3,5-Trimethylcyclohexane	C_9H_{18}	140	0.775
1,3,4-Trimethylcyclohexane	C_9H_{18}	140	0.789
1,1,3-Trimethylcyclohexane	C_9H_{18}	138	0.790
1,2,4-Trimethylcyclohexane	C_9H_{16}	140	0.778
n-Butylcyclohexane	$C_{10}H_{20}$	180	0.797
Isobutylcyclohexane	$C_{10}H_{20}$	171	0.795
sec-Butylcyclohexane	$C_{10}H_{20}$	179	0.799
tert-Butylcyclohexane	$C_{10}H_{20}$	170	0.811
1,2-Methyl-*n*-propylcyclohexane	$C_{10}H_{20}$	176	0.808
1,2,4,5-Tetramethylcyclohexane	$C_{10}H_{20}$	161	0.785
1,3-Methyl-*n*-propylcyclohexane	$C_{10}H_{20}$	172	0.794
1,4-Methyl-*n*-propylcyclohexane	$C_{10}H_{20}$	176	0.796
1,3-Diethyl-*n*-propylcyclohexane	$C_{10}H_{20}$	174	0.798
1,4-Diethyl-*n*-propylcyclohexane	$C_{10}H_{20}$	175	0.800
1,3-Dimethyl-5-ethylcyclohexane	$C_{10}H_{20}$	169	0.793
n-Amylcyclohexane	$C_{11}H_{22}$	202	0.802
Isoamylcyclohexane	$C_{11}H_{22}$	194	0.798
tert-Amylcyclohexane	$C_{11}H_{22}$	194	0.819
1,2,3,5,6-Pentamethylcyclohexane	$C_{11}H_{22}$	190	0.785
1,2-Methyl-*n*-butylcyclohexane	$C_{11}H_{22}$	197	0.811
1,3-Methyl-*n*-butylcyclohexane	$C_{11}H_{22}$	195	0.801
1,4-Methyl-*n*-butylcyclohexane	$C_{11}H_{22}$	196	0.807
1,2-Methyl-*n*-amylcyclohexane	$C_{12}H_{24}$	218	0.814
1,3-Dimethyl-5-isobutylcyclohexane	$C_{12}H_{24}$	194	0.810

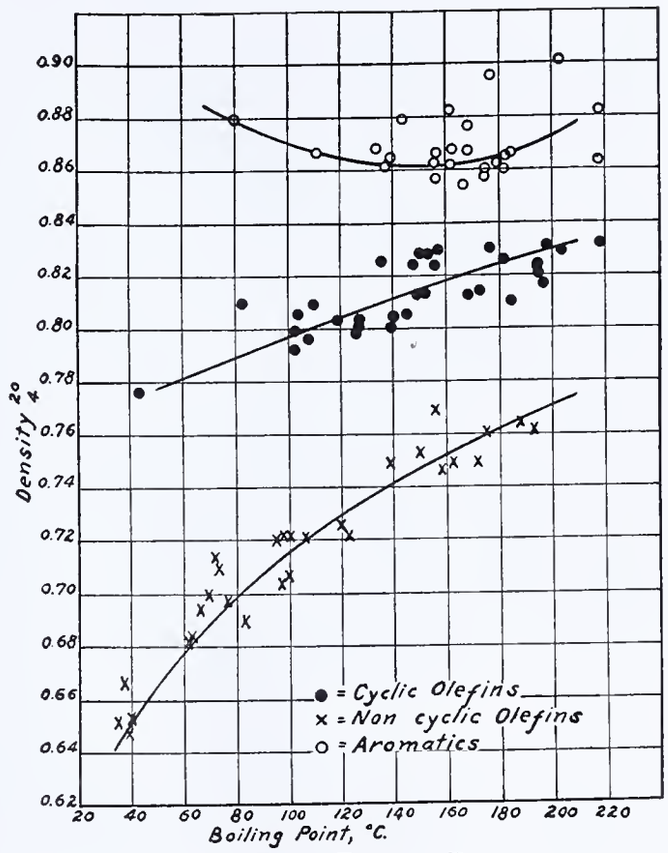

Figure 3. Boiling Point–Density Relationship for Noncyclic Olefins, Cyclic Olefins, and Aromatics

Table IV. Maleic Anhydride Treatment

Time of Treatment	Maleic Anhydride Concentration	Density $\frac{20°}{4}$	Refractive Index $\frac{20°}{D}$	Refractivity Intercept
Hours	%			
0	0	0.7825	1.4418	1.0505
1.0	10	0.7870	1.4420	1.0485
2.0	10	0.7869	1.4420	1.0485
3.0	10	0.7869	1.4420	1.0485

Estimation of the conjugated diolefin content is made from the loss in volume after the reaction products and excess reagent have been washed from the sample.

Sulfuric Acid Treatment. After maleic anhydride treatment the sample may contain cyclic olefins, noncyclic olefins, aromatics, naphthenes, and paraffins. Removal of a three-component mixture comprised of cyclic olefins, noncyclic olefins, and aromatics is effected by treatment with 91 and 98 per cent sulfuric acid by the method of Faragher, Morrell, and Levine (*2*).

Measurement of the density, refractive index, and volume before and after sulfuric acid treatment permits the calculation of the density and refractive index of the ternary mixture removed by the acid. These values, then, allow a graphical analysis of this mixture according to Figure 2.

The residue from the acid treatment, when freed of polymers, contains only naphthenes and paraffins. The composition of this binary mixture is obtained from a second graphical analysis.

Elimination of Polymers from Acid Treatment

In view of the fact that part of the analysis is calculated from the physical properties of the sample before and after

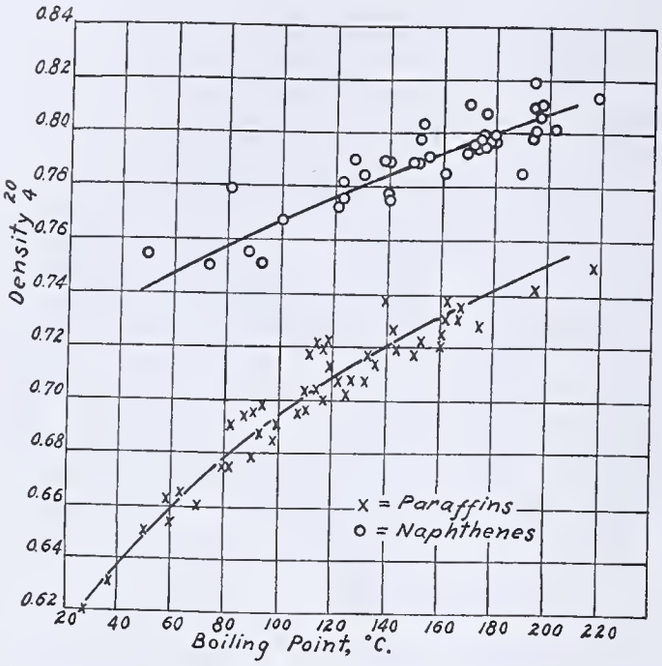

FIGURE 4. BOILING POINT–DENSITY RELATIONSHIP FOR PARAFFINS AND NAPHTHENES

sulfuric acid treatment, it is obvious that if the analytical results are to indicate the true composition of the sample, the material after acid treatment should consist only of material originally present less that removed by the acid. During acid treatment, however, polymerization and condensation take place and fractionation of the treated material to its original end point may not be sufficient to remove all polymers so formed. For instance, if two molecules of pentene polymerize to the dimer, its boiling point of about 165° C. may fall within the boiling range of the material treated.

In order to eliminate such polymers from the sulfuric acid–treated sample, it is treated in two fractions, the first boiling up to 125° C. and the second boiling from 125° to 210° C. After acid treatment both fractions are refractionated to their original end points and combined. The boiling points of the dimers of the lowest boiling compounds in each fraction will fall above the boiling range of the fractions and so will be eliminated in the redistillation.

Procedure

In order to eliminate very volatile materials in density and refractive index measurements, the sample is stripped of all material boiling below 40° C. by fractionation. Six hundred cubic centimeters of the stripped sample are then treated with 60 grams of freshly distilled maleic anhydride by heating in a 1-liter flask on a steam bath for 1 hour. A reflux condenser maintained at −10° C. with cold brine is used to prevent loss due to vaporization. At the end of an hour the sample is cooled, the hydrocarbon layer decanted from the maleic anhydride, and enough 10 per cent sodium hydroxide solution added to the maleic anhydride remaining in the flask to dissolve it. This solution is then added to the hydrocarbon layer in a 1000-cc. separatory funnel and after gentle shaking and settling is drawn off and discarded. One hundred cubic centimeters of fresh 10 per cent sodium hydroxide solution are then added to the hydrocarbon in the funnel, shaken, and drawn off, followed by two 100-cc. water washes. Handling losses should be determined by carrying out a blank treatment and have been found by authors to be of the order of 1 per cent.

Five hundred cubic centimeters of the maleic anhydride–treated material are then carefully fractionated into cuts of the following boiling ranges: 40° to 70° C., 70° to 100° C., 100° to 125° C., 125° to 150° C., 150° to 180° C., and 180° to 210° C.

The volume percentage as well as the refractive index $\left(\frac{20°}{D}\right)$ and density $\left(\frac{20°}{4}\right)$ are measured for each cut and the cuts discarded. The errors in physical property measurements should not be greater than 0.0005 in the case of the density and 0.0002 for the refractive index.

A portion of the stripped untreated sample is fractionally distilled to a vapor temperature of 125° C. and the overhead and bottoms are then treated twice with their own volume of 91 per cent sulfuric acid following the procedure of Faragher, Morrell, and Levine (*2*). Each treatment is carried out in 250-cc. centrifuge tubes, and the sludge and acid are separated by centrifuging at 1800 to 2000 r. p. m. for 10 minutes. The acid layer is withdrawn by suction.

After the second application of 91 per cent acid the naphtha is washed in the treating tube with 70 per cent methanol to remove sulfonic acids. Each fraction is then distilled through a small Hempel column to a temperature 5° C. above the end point of the original naphtha to eliminate polymers.

The two fractions are now combined and the resulting sample is treated twice with its own volume of 98 per cent sulfuric acid and centrifuged. If serious emulsions are encountered it is treated with 70 per cent methanol. The sample is washed with two volumes of 2 per cent sodium hydroxide solution and then with two volumes of water. If methanol is used, it must be thoroughly water-washed from the sample in order to prevent interference in refractive index measurements.

Sufficient sample should be taken for distillation and sulfuric acid treatment to yield residues of treated hydrocarbon totaling at least 200 cc. The overhead portions are then combined and subjected to exactly the same fractionation as the maleic anhydride–treated material, cutting the material again into the same 6 cuts by temperature and measuring the volume per cent, density, and refractive index of each cut. Handling losses should be evaluated and suitable corrections applied to the acid treating loss. The authors have found these handling losses to be of the order of 4 per cent.

Calculation of Results

Calculation of results is simplified by means of the steps enumerated below. All results are reported on the basis of a sample boiling within the range 40° to 210° C.

CONJUGATED DIOLEFINS.

1. Calculation of conjugated diolefin content on the basis of the sample stripped of volatile material.

Volume per cent of conjugated diolefins = (volume per cent loss on maleic anhydride treatment) − (volume per cent handling loss)

AROMATICS, CYCLIC OLEFINS, AND NONCYCLIC OLEFINS.

2. Conversion of first fractionation (after maleic anhydride treat) to the stripped sample basis.

$$\text{(Volume per cent of each cut)} \times \frac{(100 - \text{volume per cent conjugated diolefins})}{100}$$

3. Conversion of second fractionation (after sulfuric acid treat) to the stripped sample basis.

$$\text{(Volume per cent of each cut)} \times \frac{[100 - (\text{volume per cent acid treating loss} - \text{volume per cent handling loss})]}{100}$$

4. Calculation of volume per cent aromatics plus olefins in each cut, on the basis of the cut from the first fractionation, by subtraction of the results in per cent of steps 2 and 3.

$$\frac{(\text{Volume per cent in 1st fractionation}) - (\text{volume per cent in 2nd fractionation})}{\text{volume per cent in 1st fractionation}} \times 100$$

5. Calculation of the density and refractive index of the aromatics plus olefins in each cut by means of these properties of the cuts before and after acid treatment and the result obtained in step 4.

$$A = \frac{(100B) - [C(100 - D)]}{D}$$

where

A = density or refractive index of aromatics plus olefins
B = density or refractive index before acid treatment
C = density or refractive index after acid treatment
D = volume per cent aromatics plus olefins from step 4

6. Calculation of refractivity intercept for aromatics plus olefins in each cut from the density $\left(\frac{20°}{4}\right)$ and refractive index $\left(\frac{20°}{D}\right)$ obtained in step 5.

Refractivity intercept = refractive index − 0.5 density

7. Graphical analysis of the aromatics and olefins by locating on a separate chart similar to Figure 2 for each cut the refrac-

tivity intercept from Table I and the density from Figure 3 for pure aromatics, cyclic olefins, and noncyclic olefins. The density and refractivity intercept of the cut are then located on these charts and the graphical analyses carried out as described previously.

8. Conversion of graphical analysis results of each cut to the stripped sample basis for each component type.

$$\text{Concentration in each cut} = (\text{result of step 2} - \text{result of step 3}) \times \left(\frac{\text{result of step 7}}{100}\right)$$

9. Addition of aromatic, cyclic olefin, and noncyclic olefin contents from step 8 to obtain concentration of each type in stripped sample.

Naphthenes and Paraffins.

10. Graphical analysis similar to step 7 for naphthenes and paraffins in each cut by means of the densities and refractivity intercepts of the cuts from the second distillation. Refractive intercepts for this analysis are taken from Table I and densities from Figure 4.

11. Conversion of graphical analysis results on each cut, from step 10, to the stripped sample basis for each component type.

$$\text{Concentration in each cut} = (\text{result of step 3}) \times \left(\frac{\text{result of step 10}}{100}\right)$$

12. Addition of naphthenes and paraffin contents from step 11 to obtain concentration of each type in stripped sample.

Discussion

This method does not provide for the determination of nonconjugated diolefins of either the cyclic or the noncyclic type. They are removed during the sulfuric acid treatment along with monoölefins and aromatics, but it is believed that their concentration in most petroleum fractions is negligible. On the graphical analysis triangle the point for the noncyclic nonconjugated diolefins falls near that for the noncyclic monoölefins, while the point for the cyclic nonconjugated diolefins falls near that for the aromatics; therefore, when present they will be included with the noncyclic monoölefins and aromatics, respectively, in the analytical results. On the other hand the conjugated diolefins are very far removed, on the graphical analysis diagram, from these other groups and consequently their presence even in low concentrations might materially affect the physical properties of the mixture; hence the necessity for their removal.

Cyclic olefins wherein the double bond is located in a side chain were not included in the preparation of Table I nor the density–boiling point relationships. The latter relationship for these compounds, however, has been found to be very close to that for the cyclic olefins included in Table II for the range covered. The refractivity intercept of these compounds is slightly higher than the value for cyclic olefins given in the table. Results for cyclic olefins would therefore be slightly low if an appreciable concentration of these compounds were present.

In the analysis of fractions of high conjugated diolefin content, values for both the cyclic and noncyclic types may be obtained by a calculation of the refractive index and density of the material removed by maleic anhydride followed by a graphical analysis. In fact, the intercepts of these two hydrocarbon types are so far apart that a simple interpolation instead of a graphical analysis is sufficient for the result.

In view of the preliminary stripping to 40° C., the analysis is limited to materials boiling above this point, unless special precautions for handling these light materials are taken. Also, there may be a small distillation residue boiling below 210° C., due to vapor hold-up in the flask. If desirable this residue can be taken overhead by adding to the flask some kerosene from which the naphtha residue can be fractionated. The kerosene should have an initial boiling point of at least 250° C. to avoid naphtha contamination.

In this connection it should be emphasized that the selection of cut point temperatures previously given is somewhat arbitrary. The aim was to concentrate 6-carbon cyclics and 7-carbon noncyclics in cut 2, 7-carbon cyclics and 8-carbon noncyclics in cut 3, 8-carbon cyclics and 9-carbon noncyclics in cut 4, etc., although it is not absolutely essential that this division be obtained. The authors have found the temperatures given to be very useful in gasoline analyses. Fractions should have an appreciable boiling range because the method is dependent upon average values wherever the density–boiling point relationship is involved. In very narrow boiling fractions the assumption of an average relationship would be less valid, due to the limited number of compounds of each type present. With very wide boiling fractions the mid-temperature of the boiling range may differ appreciably from the weighted average boiling temperature and so impair the application of the density–boiling point relationship.

In relating the density and boiling point, the relations given in Figures 3 and 4 for naphthenes and cyclic olefins are based entirely upon 5- and 6-carbon ring compounds because of the theory and evidence favoring the dominance of these compounds in these types.

Table V. Typical Cracked Distillate Analyses

	Volume Per Cent	
	Sample 1	Sample 2
Noncyclic monoölefins	10.3	42.6
Cyclic monoölefins	16.8	24.0
Aromatics	25.1	14.3
Naphthenes	6.3	11.4
Paraffins	41.5	7.7

The differences in the composition of the two cracked distillates in Table V illustrate the application of this method to two materials representing extremes in composition.

Accuracy

It is very difficult to state the accuracy that can be expected from a method of this type. Obviously this is dependent upon how closely the composition of the hydrocarbon types approaches the averages used in the density–boiling point relationship. Considerable work was done on known mixtures of hydrocarbons and on gasoline analyses. Such analyses can be reproduced to 1 or 2 per cent (arithmetical).

Acknowledgment

The authors wish to express their appreciation to J. H. Boyd, Jr., for his assistance in the preparation of this paper, to E. A. Kniel for refinement of the laboratory technic, and to The Atlantic Refining Company for permission to publish this information.

Literature Cited

(1) Diels and Alder, *Ber.*, 62B, 2081–7 (1929).
(2) Faragher, Morrell, and Levine, Ind. Eng. Chem., Anal. Ed., **2**, 18 (1930).
(3) Kurtz and Ward, *J. Franklin Inst.*, **222**, 563 (1936).
(4) MacFarlane and Wright, *J. Chem. Soc.*, **1933**, 114–18.

Received September 22, 1936. Presented before the Division of Petroleum Chemistry at the 92nd Meeting of the American Chemical Society, Pittsburgh, Pa., September 7 to 11, 1936.

Spectrographic Analysis of Biological Material

II. Bismuth

JACOB CHOLAK, Kettering Laboratory of Applied Physiology, University of Cincinnati, Cincinnati, Ohio

A method is reported for the spectrographic determination of bismuth in biological material. The method is capable of detecting 0.00004 mg. of bismuth and can be used to determine quantities from 0.001 to 3.00 mg. with an average error of ±10 per cent. Samples as small as a fraction of a gram of tissue or 25 to 50 cc. of urine may be used.

THE quantities of bismuth present in biological material may be determined by a method similar to that described for lead (*1*, *2*). It is necessary first to isolate the bismuth in a concentrated form, since the most sensitive bismuth line (λ 3067.7) is partially masked by the iron line at λ 3067.3 when material rich in iron is being analyzed, and since the presence of a faint narrow band in the spectrum of the graphite electrodes makes it impossible to detect bismuth unless the short-wave edge of the band is enhanced by having at least 0.00004 mg. of bismuth in the arc. Bismuth is not a common contaminant of reagents and as its sulfide is one of the least soluble of the heavy metals (solubility product = 3.2×10^{-91}, *4*), its separation and concentration are not attended by great danger of contamination or loss. The disadvantage of increased manipulation is offset by the fact that the isolation of the bismuth permits the arcing of material identical in composition with the standards used to derive the working curves.

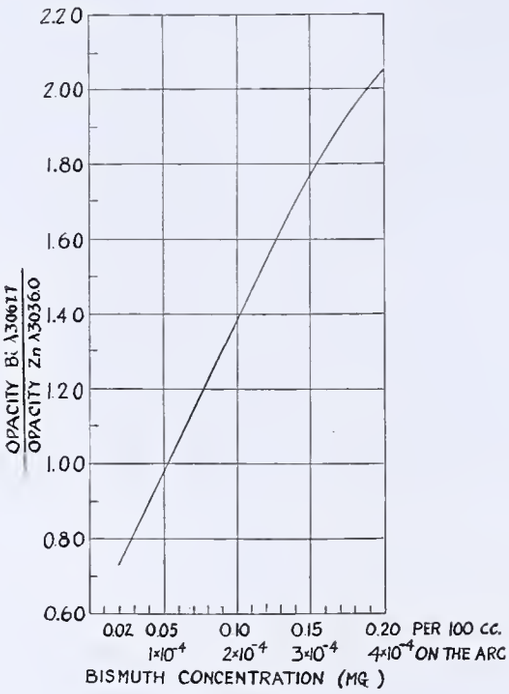

FIGURE 1

Technic

The samples, digested with nitric acid and evaporated to dryness, are ashed in a muffle furnace maintained at a temperature of 450° to 500° C. (Some difficulty due to fusing is encountered when materials rich in phosphates are ashed. Such samples, especially liver and brain, are best ashed by a wet method employing sulfuric, nitric, and perchloric acids. If care is taken to destroy the char as soon as it is formed, bismuth will not be lost during the process of ashing.) The time required for complete ashing may be shortened considerably if the gray ash produced after a few hours in the furnace is treated with nitric acid, evaporated to dryness, and again placed in the furnace for about 15 minutes. The resulting white ash is dissolved in the smallest possible quantity of nitric acid and distilled water. The excess acid is neutralized with 20 per cent sodium hydroxide and the solution made just acid to methyl orange with (1 to 2) hydrochloric acid. An excess of 3 cc. of (1 to 2) hydrochloric acid for each 50 cc. of solution is added and the solution is treated with hydrogen sulfide for 1 hour. After it has been permitted to stand overnight in order to coagulate colloidal bismuth sulfide, the sulfide is filtered off on a Munktell No. 00 filter paper and washed with a hydrogen sulfide–saturated solution of 0.1 per cent hydrochloric acid. The sulfides are dissolved from the paper with hot (1 to 1) nitric acid and the paper is washed several times with hot distilled water. The filtrates containing the bismuth are then adjusted to suitable volumes, as determined by the apparent quantity of sulfides obtained. Thus when a sample is small and when the sulfide is barely visible, the filtrate may be concentrated conveniently to 2 cc., which may then contain up to 0.06 mg. of bismuth. When the sulfides indicate the presence of considerable quantities of bismuth, any convenient concentration between 0.2 and 3.0 mg. of bismuth per 100 cc. may be employed.

Two cubic centimeters of the properly adjusted bismuth solution and 2 cc. of a stock solution of inorganic salts containing 500 mg. of zinc per 100 cc. (the zinc line λ 3036 serves as the "internal standard") are mixed in a graduated 15-cc. Pyrex centrifuge tube and evaporated to 2 cc. in a water bath. [The concentrated stock salt solution used as diluent and as base for the standard bismuth solutions is made up by dissolving 170.5 grams of sodium chloride, 63.5 grams of potassium chloride, 31.5 grams of calcium chloride ($CaCl_2 \cdot 6H_2O$), 20 grams of magnesium chloride ($MgCl_2 \cdot 6H_2O$), and 37.5 grams of sodium dihydrogen phosphate ($NaH_2PO_4 \cdot H_2O$) in 1 liter of 10 per cent hydrochloric acid. Portions of this solution (50 cc., diluted to 100 cc. and made to contain 500 mg. of zinc) serve as the stock salt standard for mixing with the bismuth isolated from the samples and to make up the bismuth standards used to derive the calibration curves. This solu-

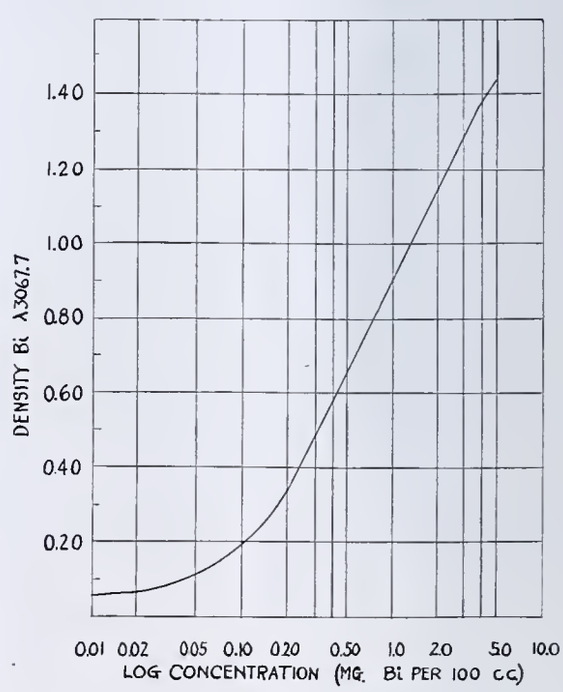

FIGURE 2

Table I. Bismuth Recoveries

Bismuth added, mg.	Nil	0.001	0.01	0.10	0.25	0.50	1.00	2.00
Bismuth found, mg.	Nil	0.0008	0.008	0.10	0.23	0.48	0.98	1.80
	Nil	0.0008	0.009	0.085	0.27	0.50	1.08	1.80

Table II. Recovery of Bismuth from Tissues and Excreta of a Rabbit

(Killed one week after the administration of 3.5 mg. of bismuth intravenously)

Tissue	Weight	Bismuth Found
	Grams	*Mg.*
Blood	76.1	0.001
Liver	54.8	0.013
Spleen	0.7	0.000
Kidneys	11.5	0.08
Heart	4.1	0.000
Lungs	6.2	0.001
Central nervous system	14.0	0.000
Testes	1.4	0.000
Bile	...	0.000
Pancreas	2.1	0.004
Muscle	578.5	0.014
Bone	132.0	0.18
Skin	208.4	0.01
Intestinal tract	132.2	0.05
Contents of tract	164.0	0.03
Ears, tail, and feet	130.0	0.10
Remainder	348.0	0.05
Entire carcass		0.533
Urine	2.24	
Feces	0.90	
Total bismuth found in excreta		3.140
Total bismuth found		3.673

tion has proved very satisfactory, in that the salts present are good conductors and give a very steady arc when used with the technic described (*1*). Moreover it is free from the excessive creeping which may give rise to incrustations about the crater of the electrodes. Such incrustations result in spectrograms with very dark backgrounds because of the high concentration of incandescent salt particles in the arc.] Then a 0.2-cc. portion is introduced into each of 4 cratered graphite electrodes which are dried at 120° C. and arced in accordance with the technic described for lead (*1*), while the region λ2600 to λ3800 is photographed.

Following the suggestion of Lundegardh (*3*), two curves have been found useful in evaluating the densitometric values for the plates. The curve in Figure 1, in which the opacity ratios (galvanometer throw for the zinc line/galvanometer throw for the bismuth line) are plotted against the bismuth concentrations, is employed when the average opacity ratio of the four spectra indicates less than 0.0004 mg. (0.20 mg. per 100 cc.) of bismuth on the arc. This curve may also be used in estimating higher amounts of bismuth by diluting with a sufficient quantity of the diluent to reduce the bismuth concentration. The alternative, when dealing with quantities above 0.20 mg. of bismuth per 100 cc., is to determine the average density of the bismuth line corrected for variations in the density of the internal standard and to evaluate the bismuth concentration from the straight-line portion of Figure 2. These curves were plotted from the mean values of repeated observations on a series of solutions prepared by adding known quantities of bismuth and the required quantity of the "internal standard" to suitable volumes of the stock salt solution.

Applicability, Sensitivity, and Accuracy of Method

The recoveries for known amounts of bismuth added to digested portions of beef are tabulated in Table I. In Table II are recorded the results obtained from the tissues and excreta of an experimental animal. The weights of tissue available have been recorded in order to indicate the size of samples which can be utilized. The error of analysis, as shown in Table I, naturally depends on the quantity of bismuth encountered. For amounts above 0.20 mg. the error is ±10 per cent. For quantities from 0.01 to 0.20 mg. the error is about ±0.01 mg. The greatest proportional error naturally occurs with quantities below 0.01 mg., but the errors in the estimation of extremely small amounts down to 0.001 mg. rarely exceed ±20 per cent. (Although much smaller quantities can be detected, at least as low as 0.00004 mg., quantitative estimations below 0.001 mg. do not appear sufficiently accurate to be useful because of mechanical losses, such as those caused by adsorption, and the passage of colloidal bismuth sulfide through the filter paper.) In the case of material free from iron and containing very little ash, the separation of bismuth is of course unnecessary, and it may well be that quantities as low as 0.0002 mg. of bismuth can be dealt with by further concentrating the solution of the ash.

Literature Cited

(1) Cholak, J., Ind. Eng. Chem., Anal. Ed., 7, 287 (1935).
(2) Cholak, J., *J. Am. Chem. Soc.*, 57, 104 (1935).
(3) Lundegardh, H., "Die quantitative Spektralanalyse der Elemente," Part II, Jena, Gustav Fischer, 1934.
(4) Olsen, J. C., "Chemical Annual," 7th ed., p. 477, New York, D. Van Nostrand Co., 1934.

Received July 11, 1936. Presented before the Division of Physical and Inorganic Chemistry, Symposium on Spectroscopic Methods of Analysis, at the 92nd Meeting of the American Chemical Society, Pittsburgh, Pa., September 7 to 11, 1936.

Determining Calcium in Blood Serum

H. K. MURER,[1] Washington Agricultural Experiment Station, Pullman, Wash.

In the determination of blood serum calcium by the Rymer and Lewis (*1*) modification of the Tisdall (*2*) method, the separation and washing of the calcium oxalate by successive centrifuging are very time-consuming. There is also possible loss while decanting and from creeping of the precipitate.

By the use of 30-cc. sintered-glass Büchner funnels (designation 3 G. 4), this centrifuging and decanting can be avoided.

Place 2 ml. of serum in the test tube, dilute with 2 ml. of water and 0.5 ml. of saturated ammonium oxalate, shake, and allow to stand overnight. Filter on the glass filters, and wash with ammonia water (4 cc. of concentrated ammonia to 250 ml.). After removing the funnel, rinse out the portion below the filter, place the funnel on top of test tube in the suction flask, dissolve the precipitate through the filter with three 2-ml. portions of hot *N* sulfuric acid, applying suction after each addition of acid, and wash the filters with water. Remove and rinse the test tube and lower portion of filter into a 50-ml. beaker, heat to boiling, and titrate with dilute permanganate from a Koch automatic microburet.

Very satisfactory results were obtained with this method which lends itself well to fast routine work.

Literature Cited

(1) Rymer, M. R., and Lewis, R. C., *J. Biol. Chem.*, 95, 441 (1932).
(2) Tisdall, F. F., *Ibid.*, 56, 439 (1923).

Received September 1, 1936.

[1] Present address, 44 Irving St., Cambridge, Mass.

Spectrographic Determination of Platinum by the Constant-Pair Method

JAMES J. MANNING AND JAMES COULL, Cooper Union Institute of Technology, New York, N. Y.

WHILE investigating minute impurities in dental alloys by means of the spectrograph, the authors were able to develop a rapid method for the determination of platinum. The present method of cupellation and subsequent chemical analysis, although more precise, is long and tedious, besides being expensive. The spectrographic method is not only simple of execution but the most rapid by which the platinum content of precious metal alloys, jeweler's scrap, etc., may be obtained. It is the authors' belief that this method can be extended to include such metals as palladium, gold, silver, rhodium, etc., with all the advantages mentioned above.

Inasmuch as the authors' method has been evolved from a study of many methods previously established, it is desirable to give a brief account of these other methods.

A previous method for the spectrographic determination of platinum in silver alloys, as developed by de Laszlo (*2*), is based on the fading out of weak lines at certain concentrations of platinum. At threshold concentrations weak lines disappear until, as the concentration becomes smaller, only the persistent lines or *raies ultimes* remain on the photographic plate. The degree of correlation existing between the number of fine lines appearing in the spectrum and the concentration of platinum is one of the main factors governing the accuracy of this method. Undue stress, however, is not placed on the reproducibility of arc conditions, in going from one spectrum to the next. The de Laszlo method, as used in the routine analysis of alloys containing small amounts of platinum, has an accuracy of ±20 per cent of the amount present.

The authors have found that greater accuracy can be obtained by counting the number of lines in a given spectrum than by direct visual comparison of line intensities. This latter method, which enjoys widespread application, requires very rigorous control of arc conditions in order to reproduce the background present in the standard plate.

Method of Constant Internal Standard

It remained for Gerlach and Schweitzer (*1*) to show "that it is not practical to establish on general principles an absolute system of analyses which is based solely upon the measurement of the intensity of spectrum lines of the element which is to be quantitatively determined." Thus they compare in the same spectrum lines of the impurity with lines of the main constituent, where the latter is assumed to be present in constant amount or to vary only as the result of the variation in the amount of the impurity to be determined. This arrangement eliminates any differences arising from changes in conditions of excitation, timing, photography, etc., since these latter affect both groups of lines similarly. For alloys having elements with many lines of decided intensity variation this method is excellent. In cases of elements having few lines, however, it becomes a matter of considerable difficulty to find enough suitable pairs to compile a reference table of any value. In precious metal alloys where gold is the main constituent (present in varying amounts), the above method cannot be used.

Nitchie and Standen (*3*) modified Gerlach and Schweitzer's method by adding to the sample in solution a constant amount of an element not originally present. The added element furnished spectrum lines of constant intensity which served as a comparison standard in estimating the percentages of the constituent to be determined. Using a microphotometer, the intensity of the added element was compared with that of the element being estimated, and from known amounts of the latter, in standards, a calibration chart was constructed. This calibration chart could then be used in future analyses.

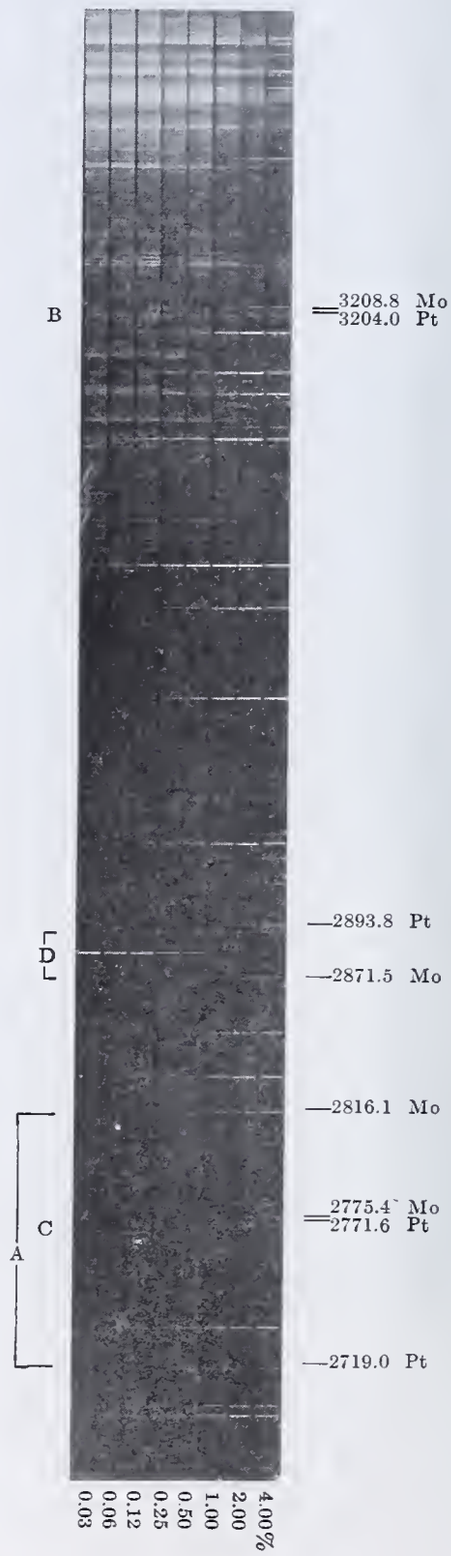

FIGURE 1

Constant-Pair Method

In the case of dental alloys the method of Gerlach and Schweitzer (*1*) cannot be used because the main constituents are not present in constant amount. The method of Nitchie and Standen (*3*) can be employed where a microphotometer is available.

Obviously if an element could be found which behaved like platinum in its arc spectrum, the amount of platinum in the sample could be estimated from the concentration of such an element. Some of the lines of this element would have the same intensity as some of the platinum lines if both were present in equal amounts. By noting the concentration of the added element at which equal intensities are obtained, the percentage of platinum could be found. Such a method would require no calibration curve and would secure the full advantage of the internal standard method. The preliminary work necessary in the selection of a suit-

able internal standard is somewhat long and tedious, but once this has been done the determinations which follow are a matter of simple routine.

Selection of Internal Standard

Confining attention to the work done in the proper selection of an internal standard for platinum, the authors were able to note the following facts: The element chosen as the internal standard must be absent from the sample or alloy which is the subject of analysis. Its spectrum must contain a sufficient number of suitable lines not too far removed from the platinum lines usually employed in analysis. It must be subject to the same sampling conditions as the element being determined—the two elements must be soluble in the same acids or at least be capable of giving a clear solution when their separate solutions are mixed or diluted.

Among the elements examined as to their suitability to act as internal standards for platinum, aluminum, manganese, and nickel were eliminated because of the differences in their rates of volatilization as compared with platinum. The lack of suitable lines eliminated tungsten. Tin, bismuth, and antimony were rejected on account of their failure to meet the sampling conditions specified above. Molybdenum was found to be suitable and the final selection of this element was justified by the results explained below.

Selection of Constant Pair

Solutions were made by dissolving separately in aqua regia 2-gram samples of pure molybdenum and platinum. These solutions were diluted to various concentrations and mixed in equal volumes, so that a series of solutions containing from 0.4 to 0.03 per cent of each metal was obtained. Spectrographic examination of these solutions as shown in Figure 1 revealed the following pairs of lines.

Pair	*A*	*B*	*C*	*D*
Platinum	2719.0	3204.0	2771.6	2893.8
Molybdenum	2816.1	3208.8	2775.4	2871.5

Of these the matched constant pair marked *D* was selected because the lines were sufficiently sensitive to record small changes in composition over the range studied; they were not basic or ultimate lines subject to reversal, masking or halation effects were absent, and their close proximity to each other ensured uniform conditions in the emulsion.

In addition to *D*, the authors have selected as matched pairs *A*, *B*, and *C*, which were found to be very useful as an aid to checking results. At the higher concentrations pair *A* has the same intensity, whereas pair *B* has the molybdenum line slightly more intense than the platinum line, and in pair *C* the platinum line is more intense than the molybdenum line. These pairs are therefore useful in estimating roughly the amount of platinum present in the solution.

Apparatus and Experimental Results

The spectrum from 2450 to 3300 Å. was photographed on a 25-cm. (10-inch) plate using a Bausch and Lomb Littrow-type quartz spectrograph of 70-mm. aperture and 183-cm. focal length. Three-minute exposures were found to be sufficient to volatilize all the platinum and molybdenum contained in the crater of the graphite rod.

A 1-gram sample of the alloy dissolved in aqua regia was diluted to 25 cc. Three solutions, each of 10 cc., were prepared by taking equal volumes of alloy and molybdenum solutions, the latter at high, medium, and low concentrations. Spectra were obtained from these solutions by pipetting 0.15 cc. into each carbon crater and arcing when dry, using a current of 11.5 amperes. These spectra serve to indicate the approximate amount of platinum in the solution. A final plate was then made using the molybdenum solutions over a narrower range of concentration until a matched pair of lines was obtained. In the hands of an experienced operator five to seven solutions are required in obtaining a suitable match.

Table I shows the quantitative results obtained by the constant-pair method for a group of dental alloys. The analyses given in the second column are taken as correct, since they represent at least six determinations of platinum. These determinations were carried out by cupellation of the alloy and precipitation of the platinum from the solution as ammonium chloroplatinate after removal of the gold.

Table I. Quantitative Results with Dental Alloys

Sample	Platinum by Cupellation, etc.	Platinum by Spectrograph	Difference
AG	0.0250	0.0227	−0.0043
A7	0.0300	0.0350	+0.0050
A8	0.0115	0.0130	+0.0015
A3	0.0300	0.0280	−0.0020
A9	0.0102	0.0088	−0.0014
A1	0.0400	0.0370	−0.0030
AP	0.0129	0.0124	−0.0005

The method as carried out should give an accuracy of ±17 per cent of the total amount of platinum present, by visual comparison of line intensities. It is probable that this accuracy could be greatly improved by determining line intensities using a densitometer.

Summary

A spectrographic method has been developed in which a rapid estimation may be made of platinum in precious metal alloys, using molybdenum as the internal standard. Conditions governing the proper selection of elements used as internal standards are stated.

Acknowledgment

The authors wish to acknowledge with thanks the helpful criticism and advice of C. C. Nitchie, Bausch and Lomb Optical Co., Rochester, N. Y.

Literature Cited

(1) Gerlach and Schweitzer, "Foundations and Methods of Chemical Analysis by the Emission Spectra," p. 152, Leipzig, Leopold Voss, 1929.
(2) Laszlo, H. de, Ind. Eng. Chem., 19, 1366 (1927).
(3) Nitchie and Standen, *Ibid.*, Anal. Ed., 4, 182 (1932).

Received November 5, 1935.

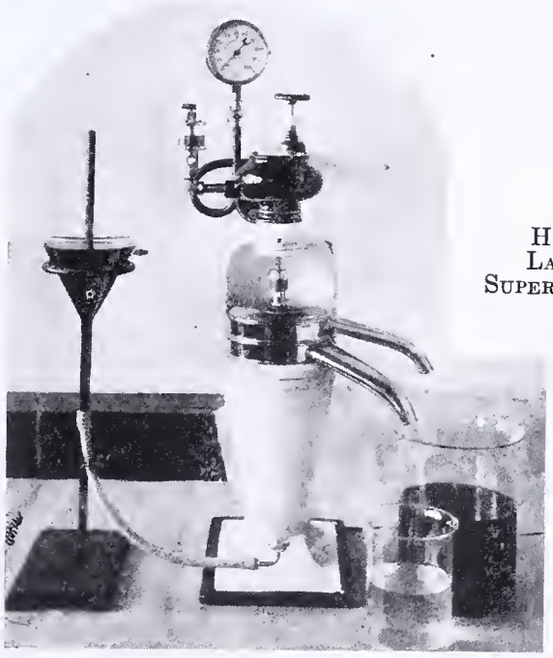

High-Speed Laboratory Super Centrifuge

Impact Machine for Rubber Testing

Determining the Stress-Strain Diagram at High Speed

GEO. J. ALBERTONI
The Goodyear Tire and Rubber Company, Akron, Ohio

The main features of this impact machine are as follows: high speed of performance, 25,000 cm. per minute, as compared with 50 per minute by the ordinary methods, accurate and direct determination of the energy absorbed at a speed in reasonable agreement with performance, possibility of determining the stress-strain relationship by impact, possibility of determining the magnitude of decay on the energy storage capacity at successive cycles, possibility of determining the stress-strain characteristics of uncured stocks by emphasizing the elastic phase under conditions of high speed, and simplicity of manipulations required, leading to the possible application to routine control.

IN CONTRAST to the ordinary standard procedure at low speed, various methods have been devised to carry out tensile tests of rubber under rapid application of load, with the purpose of securing more definite indications, at a speed in agreement with actual performance. The application of those methods to the study of the tensile properties of rubber stocks goes as far back as 1910, when Beadle and Stevens (*1*) made use of the pendulum to investigate these properties. Their work applied to rubber compounds of different compositions and different loadings.

More recently, Van Rossem and Beverdam (*2*) presented a set of results tending to prove an optimum in the tensile properties, coinciding with the best cure as determined by practical observation.

However, all experiments, previous to those here reported, are limited to the determination of the tensile strength of rubber, and no attempt was made to extend the investigations to the determination of the resistance of rubber at different elongations.

The machine here illustrated is designed to measure not only the energy absorbed at break, under conditions of high speed, by impact, but also the stress-strain relation.

General Features

Figure 1 shows a general view of the impact tester as designed by the author and in use at the Goodyear Research Laboratories. The pendulum hammer and the test piece are in position ready for test. Figure 2 represents a close view of the pendulum hammer and scales.

ELONGATION FEATURES. The most important parts of the elongation system are the tripping device and the arcuated member secured to the pendulum hammer.

The method of securing the test piece to the machine consists in having one of the two supporting pins capable of dropping from position whenever the lock is set free by the impact of the elongation pin secured at the arcuated member of the pendulum hammer. The dropping pin supporting one end of the test piece is carried by a cylinder capable of rotating around a pinion. The method of arresting and releasing the rotor is illustrated by the detailed view of the tripping device (Figure 3).

To secure the release of the test piece at different elongations, an arc is attached to the pendulum hammer. To this arc is secured a removable pin, capable of releasing the tripping device at any prefixed elongation of the test piece. The arc carries a series of holes at such distances as to operate at zero elongation, at 50, 100, 150, and every 50 per cent elongation up to 400 per cent. On the present machine, holes are also provided for 10, 20, 30, 40 per cent, and also for 450 up to 650.

Experimental determinations, carried out by the use of fine metallic wire of proper lengths secured with the rubber test piece in proper position for test, tend to demonstrate that the test piece is fully released at the elongation required.

In Figure 3 the arrows indicate the direction of the motions and illustrate the coördination of the movement of the arcuated member, with the release of the trigger.

TEST PIECE. Although different experiments were carried out, using the dumbbell test piece, the ring type was finally adopted for convenience. The rings are cut from the ordinary

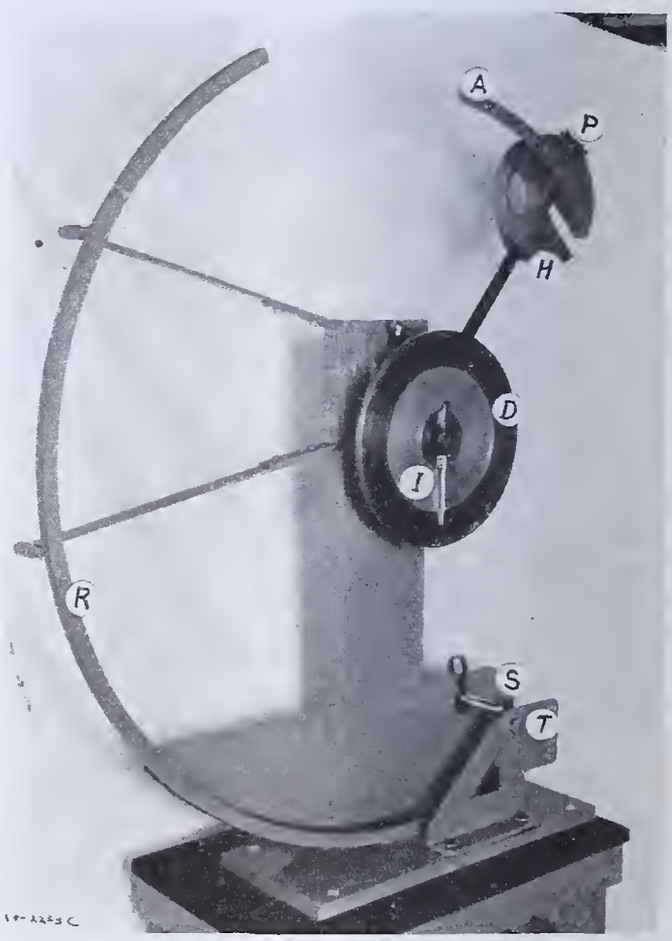

FIGURE 1. GENERAL VIEW OF MACHINE

A. Arcuated member on which are directly indicated settings of pin used to trip releasing device at different elongations of test piece
D. Dials
H. Pendulum hammer
I. Indicator
P, *R*. Pawl and rack arrangement (used only for special purposes, pawls being normally kept in a lifted position)
S. Pins securing test piece at proper position
T. Support, at back of which is secured the tripping mechanism

molded 2-mm. sheets, by the same procedure used for the dumbbell test piece. The diameter, measured at the middle of the width, is 7.0 cm.; the initial length is 11 cm. (half of the circumference). Figure 4 shows the three test pieces (6.3, 5, and 3 mm. in width) and the corresponding dies.

Operation

The procedure to be followed in the operation of the machine can be considered in three ways:

1. Procedure required to obtain the maximum of accuracy necessary to calculate the full extent of the stress-strain curves. A new test piece is required for the determination of each point.
2. Simplified procedure sufficient to determine the energy absorbed by the test pieces at two elongations, a and b (preferably 100 per cent apart), and to calculate the modulus at the elongation $(a + b)/2$.
3. Determination of the energy absorbed at break, to evaluate the relative tensile strength of the stocks and eventually their best cure.

Aside from the type of correction and the number of test pieces required, the method of operating the machine is substantially identical in all three cases. However, in determining the tensile strength, the use of the releasing pin, set at the arcuated member of the hammer, is omitted, and the tripping device is kept in locked position.

The method of operation is as follows:

Raise the pendulum to the position for impact and set the pin in the arcuated member of the hammer at the position indicated

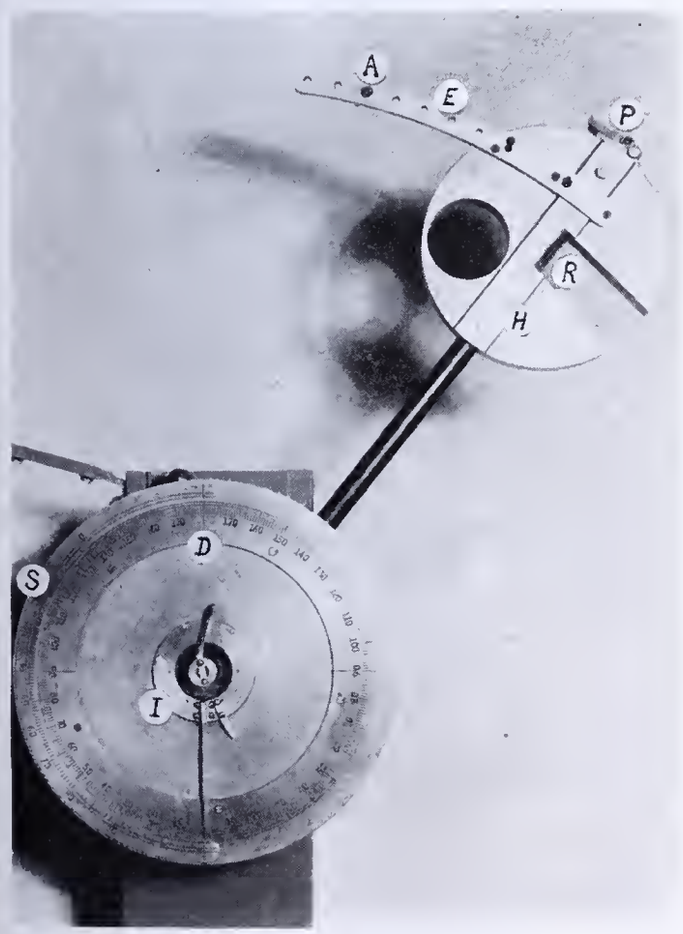

Figure 2. Close View of Pendulum Hammer and Scales

A. Arcuated member attached to pendulum hammer
D. Degree scale (divided in tenths)
E. Openings for holding releasing pin at different elongation settings
H. Pendulum hammer
I. Indicator arrangement and sliding supporting disk, pressed (at back) by a series of small springs
P. Pawls, with small adjusting cam
R. Roller at center of pendulum hammer, against which stretches central portion of lubricated test piece while pendulum advances
S. Scale for corrected readings of available kinetic energy of pendulum

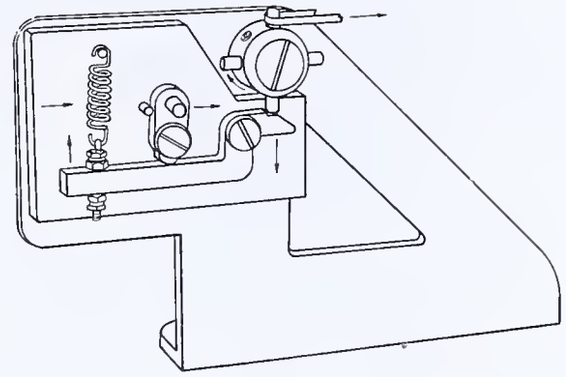

Figure 3. Tripping Device

for the release of the test piece at the elongation wanted. Lubricate the test piece with castor oil, or castor oil diluted with a mixture of methanol and ether. Set the ring test piece, across the pendulum path, from the movable to the stationary pin and lock the trigger of the tripping device. Release the pendulum weight and record the readings of the dials.

In operating the machine, the pendulum ruptures or carries the test pieces to a definite elongation when near or at the bottom of the fall.

The difference between point H, from which the center of gravity of the pendulum is allowed to drop, and height H_1, to which it rises at the other side of the stroke, is proportional to the energy required to break or to elongate the test piece. The energy absorbed is equal to:

$$W(H - H_1)$$

where W = weight of the pendulum

Construction Details and Calculation of Results

The total drop height and available drop heights of the pendulum hammer when due allowance is made for frictional resistances are:

Distance of the center of gravity from the axis of rotation, 56.6 cm.

Maximum pendulum deviation from the vertical, 142.3°; total drop height, 101 cm.

Available drop height when correction is made for bearing and air resistance and for frictional resistance of the pointer, 100 cm.

Available drop height when further correction is made for the resistance due to the tripping device, 98.5 cm.

On the dial for the direct reading of the per cent energy absorbed, when the elongation device is used, the graduation of the scale represents the drop in centimeters of the center of gravity of the hammer from 98.5 cm. above its lowest position.

Hammers of different weights were adopted on account of wide differences in resistance of the rubber stocks. The

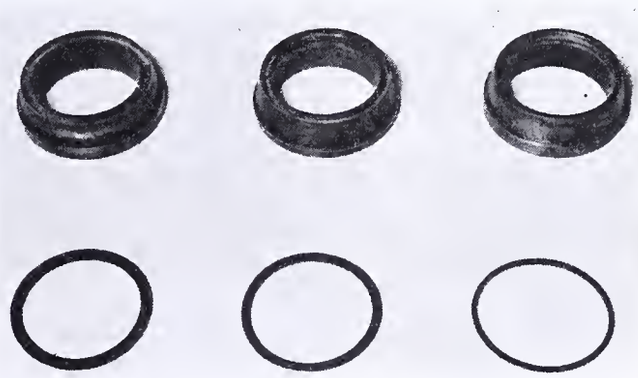

Figure 4. Test Pieces and Dies

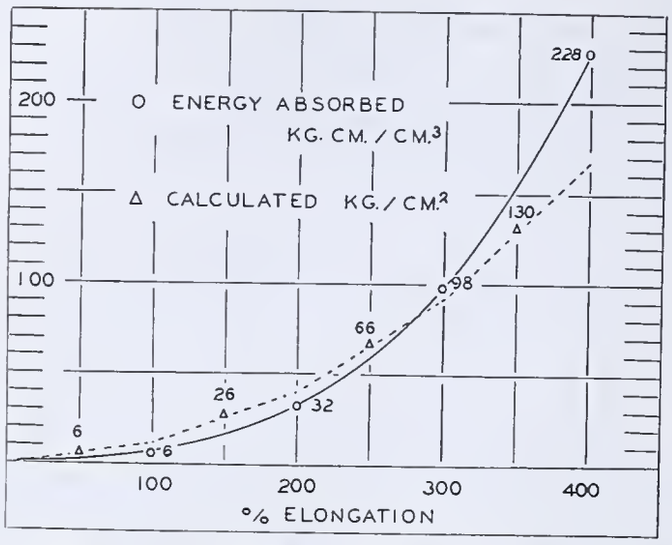

FIGURE 5. CALCULATION OF KG. PER SQ. CM. VALUES FROM ENERGY ABSORBED (KG. CM. PER CC.)

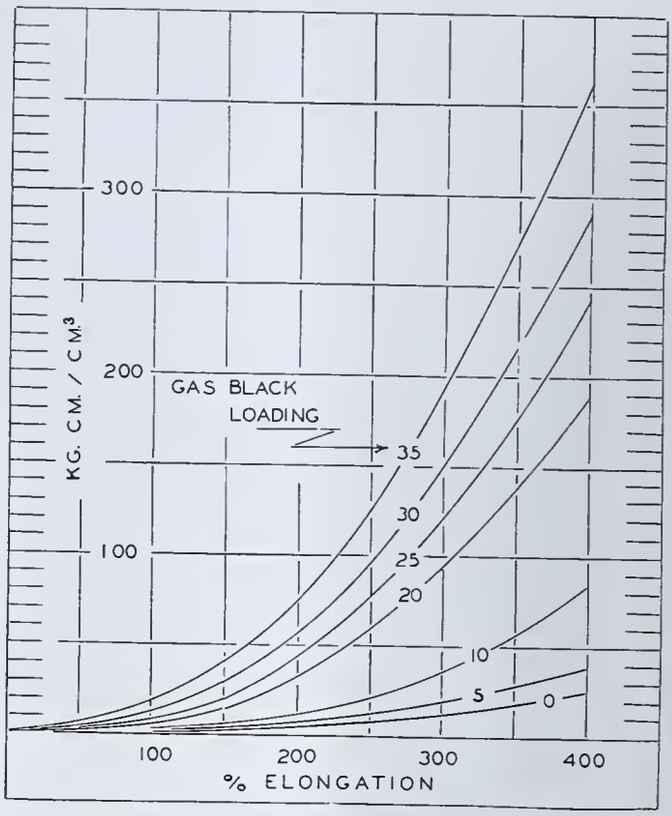

FIGURE 6. ENERGY ABSORBED AT LOW SPEED

50 cm. per minute, by usual methods

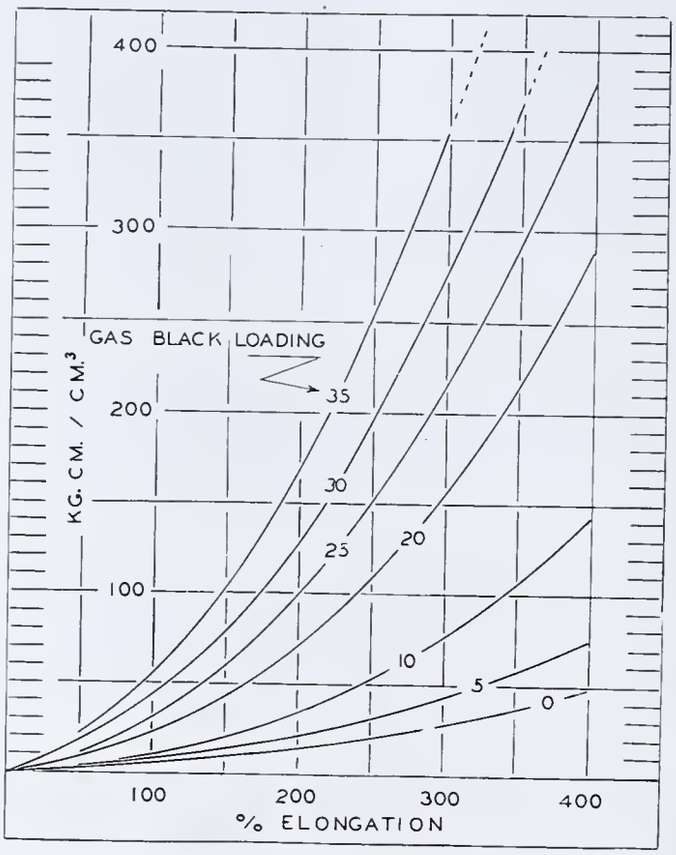

FIGURE 7. ENERGY ABSORBED AT HIGH SPEED BY IMPACT

25,000 cm. per minute

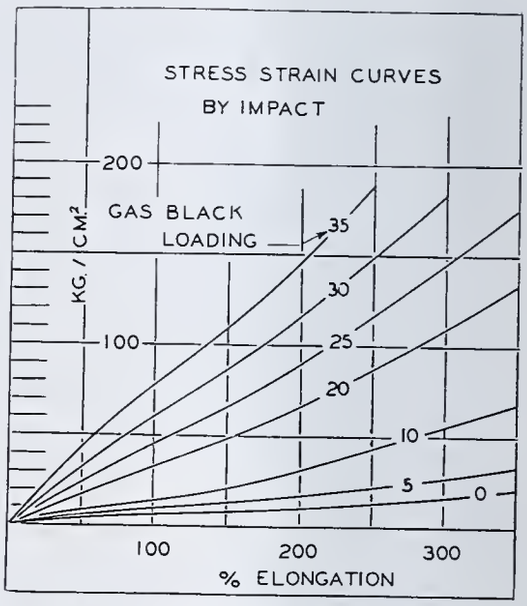

FIGURE 8. STRESS-STRAIN RELATIONSHIP BY IMPACT

Kg. per sq. cm. calculated from kg. cm. per cc. values

three weights used are 4,077, 10,695, and 13,325 grams. They are quickly interchangeable, being constructed of overlapping sections. Figures 1 and 2 illustrate a single-weight hammer of 10,695 grams.

The average dimensions of the three test pieces used are as follows: mean diameter of all three ring test pieces, 7.0 cm.; widths, 6.3, 5.0, and 3.0 mm.; volume per millimeter of thickness, 1.38, 1.08, 0.65 cc., respectively; average gage, 1.8 mm.

The factors for the calculation of the energy absorbed per unit volume of the test piece, from calculations are as follows:

Test Piece (1.8-Mm. Gage) Width	Vol.	Factors for: 74.08-kg. wt.	10.69-kg. wt.	13.3-kg. wt.
Mm.	*Cc.*	*Kg. cm. per cc.*		
6.3	2.49	1.61	4.23	5.26
5.0	1.95	2.06	5.40	6.72
3.0	1.17	3.43	9.00	11.20

The factors, based on the equivalence of results, from experimental data are:

Test Piece (1.8-Mm. Gage) Width	Vol.	Factors for: 4.08-kg. wt.	10.69-kg. wt.	13.3-kg. wt.
Mm.	*Cc.*	*Kg. cm. per cc.*		
6.3	2.49	1.7	4.23	5.2
5.0	1.95	2.0	5.3	6.5
3.0	1.17	3.3	8.7	10.8

The actual drop height of the hammer at different elongations is:

Elongation %	Drop Height *Cm.*	Elongation %	Drop Height *Cm.*	Elongation %	Drop Height *Cm.*
20	95.2	300	99.8	500	96.2
100	96.9	400	98.4	600	94.9
200	98.1				

TABLE I. ENERGY ABSORPTION (KG. CM. PER CC.) GAS BLACK LOADINGS, VOLUMES

Elongation %	Gas Black Loadings, Volumes: 0		5		10		20		25		30		35	
	50[a]	25,000[a]	50[a]	25,000[a]	50[a]	25,000[a]	50[a]	25,000[a]	50[a]	25,000[a]	50[a]	25,000[a]	50[a]	25,000[a]
50	..	3	1	4	1	6	2	8	3	13	5	17	7	24
100	1	6	2	9	3	12	5	22	8	32	13	43	19	57
150	2	10	4	14	6	20	15	42	20	58	30	79	41	103
200	4	14	8	21	12	34	33	70	44	98	57	128	76	166
250	8	21	12	31	21	52	60	108	78	149	97	196	126	250
300	12	27	20	43	36	76	96	156	122	214	149	278	192	354
350	18	36	28	58	58	108	140	217	178	296	216	370	272	...
400	26	48	40	76	86	144	190	290	244	384	290	...	364	...

[a] Cm. per minute.

For ordinary determinations, this correction is generally not required but was applied in calculating the results illustrated here.

The correction for frictional resistance of the test piece, at the pins, was calculated as the energy absorbed at no elongation by releasing the tripping device at such position, and recording the energy absorbed. This determination is desirable to establish the operating condition of the machine and the characteristics of the stock tested. The values range between 5 and 7 kg. cm. per cc., according to the type of stock. The results are very uniform when the test piece is previously lubricated, as indicated under "Operation."

The striking velocity of the pendulum hammer is calculated from the equation

$$V = \sqrt{2\,GS}$$

where V = velocity at end of time t, sec.
S = vertical space traversed in time t (100 cm.)
G = acceleration of gravity (980)
$V = \sqrt{2 \times 980 \times 100}$
= 443 cm. per sec.
= 26,580 cm. per min.
= 10 miles per hour

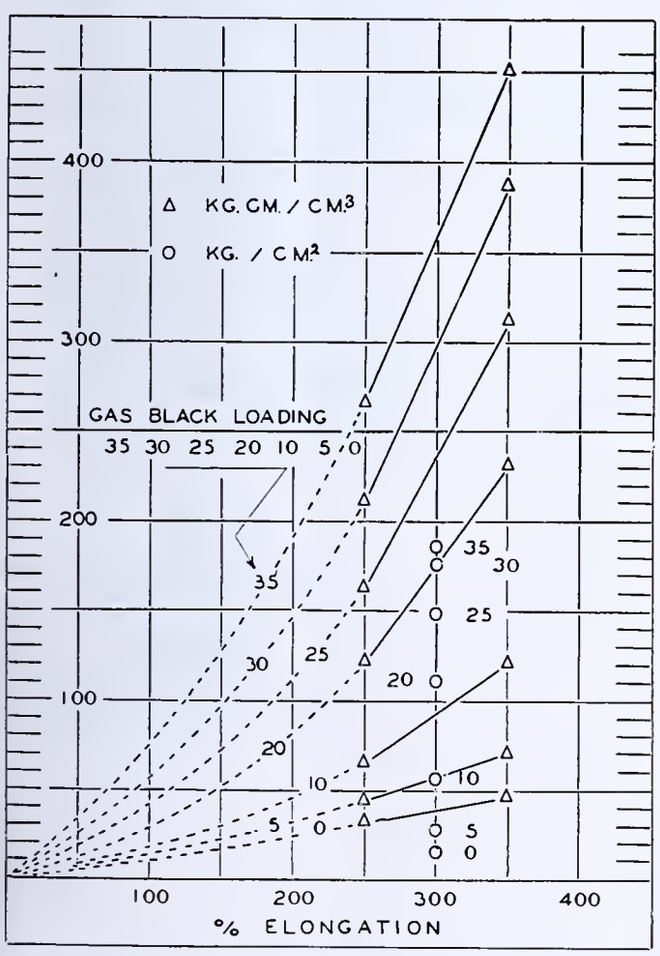

FIGURE 9. ENERGY ABSORBED BY IMPACT

At 250 and 350 per cent elongation and calculated modulus at 300

The calculation of the stress-strain curves (in kg. per sq. cm.) from the relation between elongation and energy absorbed (in kg. cm. per cc.) is made as follows:

The area under the stress-strain curves can, with sufficient degree of approximation, be divided into a series of trapeziums.

The number of kg. per sq. cm. at E per cent elongation = [(kg. cm./cc. at elongation $E + A$) − (kg. cm./cc. at elongation $E - A$)] multiplied by $100/2\,A$.

The area under the curve representing kg. cm. per cc. between 0 and 50 per cent elongation can be considered as a triangle. The number of kg. per sq. cm. at 25 per cent elongation can be considered equal to the number of kg. cm. per cc. at 50 per cent elongation.

Figure 5 illustrates graphically the procedure used to calculate the stress-strain curve from the values of kg. cm. per cc.

Experimental Applications to Vulcanized Rubber

The following is a series of tests applied to vulcanized rubber. No attempt is made to illustrate the application of the machine to uncured stock.

COMPOSITION AND CURE. The composition of the stocks tested was as follows:

Stock No.	V-92	V-93	V-94	V-95	V-96	V-97	V-98
Rubber	100	100	100	100	100	100	100
Gas black	None	9.4	18.8	37.5	47.1	56.4	65.8
Zinc oxide	5	5	5	5	5	5	5
Sulfur	3	3	3	3	3	3	3
Stearic acid	4	4	4	4	4	4	4
Captax (mercaptobenzothiazole)	0.35	0.50	0.80	1.2	1.3	1.3	1.3
Vol. gas black loading	0	5	10	20	25	30	35

Cures were 35, 50, 70, 100, and 140 minutes at 260° F. The best cure, as judged by tear and practical observation, was 70 minutes. Therefore, in the following tests (except for the application of the impact test to the determination of the best cure), only the 70-minute cure was represented.

ELONGATION AND ENERGY ABSORBED. The relation between elongation and energy absorbed at low speed by the usual methods and at high speed by impact is shown in Figures 6 and 7. The comparison between energy storage capacity at 50 and at 25,000 cm. per minute is given in Table I.

STRESS-STRAIN DATA. The stress-strain curves by impact, calculated from the relation between elongation and energy absorbed, are given in Figure 8. The stress-strain data calculated from Table I are as follows:

Elongation %	Gas Black Content, Volumes: 0	5	10	20	25	30	35
	Kg. per sq. cm.						
25	3	4	6	8	13	17	24
100	7	10	14	34	45	62	79
150	8	12	22	48	66	85	109
200	11	17	32	66	91	117	147
250	13	22	42	86	116	150	188
300	15	27	56	109	147	174	...
350	21	33	68	134	170	...	...

SIMPLIFIED DETERMINATION OF ENERGY ABSORPTION AND MODULUS. A simplified procedure limited to the deter-

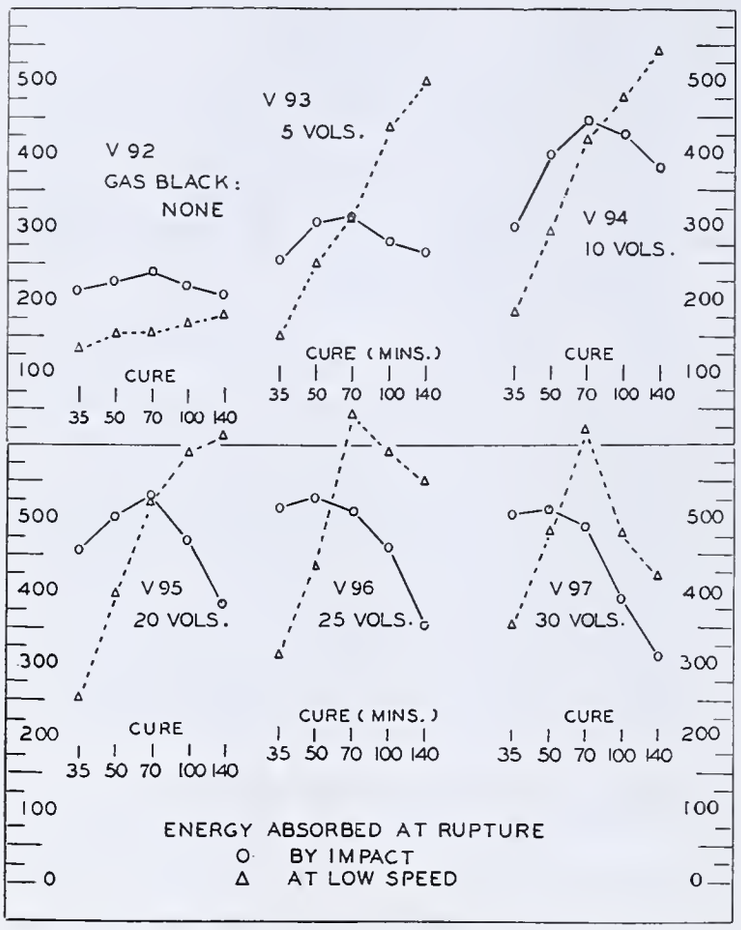

FIGURE 10. ENERGY ABSORBED AT RUPTURE, IN RELATION TO CURE

mination of the energy storage capacity at 250 and 350 per cent elongation and to modulus at 300 per cent is shown in Figure 9 and in Table II.

ENERGY ABSORPTION AT BREAK. The energy storage capacity at break in relation to best cure is shown in Figure 10.

Probably one of the most useful applications of the impact test is the determination of the best cure, from the standpoint of energy storage capacity. The difference between cure is, in some cases, not very accentuated and almost on the limit of the errors involved in the test. However, the general trend is, in most cases, sufficient to indicate the true value of the best cure.

TABLE II

Elongation %	Gas Black Content of Stock, Volumes: None	5	10	20	25	30	35
350	11.3[a]	16.9[a]	28.8[a]	55.3[a]	58.8[a]	44.5[a]	(52)[a]
250	7.7[a]	10.4[a]	15.4[a]	29.0[a]	30.9[a]	24.4[a]	30.7[a]
	Test Piece Width, Mm.: 6.3			5	3		
	Experimental Factors 4.2			5.3	8.7		
	Energy Storage Capacity						
350	47[b]	71[b]	121[b]	232[b]	312[b]	387[b]	(452)[b]
250	32[b]	44[b]	65[b]	122[b]	164[b]	212[b]	267[b]
	Modulus						
300	15[c]	27[c]	56[c]	110[c]	148[c]	175[c]	185[c]

[a] Scale reading (per cent energy absorbed).
[b] Values marked [a] multiplied by the corresponding factors.
[c] Modulus (kg. per sq. cm.), calculated from values marked [b].

Following is a comparison of results obtained at 50 cm. per minute with those at more than 25,000 cm. by impact; the cures were 35, 50, 70, 100, and 140 minutes at 260° F.:

Stock No.	Gas Black Loading Vol.	Ratings in % of Lowest Cure Values: At low speed 50-min.	70-min.	100-min.	140-min.	By impact 50-min.	70-min.	100-min.	140-min.
V-92	None	116	118	128	132	108	113	106	101
93	5	169	228	295	340	118	123	110	104
94	10	163	234	267	297	132	152	146	126
95	20	157	207	237	243	110	116	104	83
96	25	140	206	192	178	104	99	90	68
97	30	131	178	138	119	100	98	77	62
98	35	128	147	128	112	99	97	75	47

Acknowledgment

The author desires to express his thanks to R. P. Dinsmore and L. B. Sebrell for permission to publish this paper, and to W. W. Vogt and M. J. DeFrance for valuable criticism.

Literature Cited

(1) Beadle, C., and Stevens, H. P., *Proc. Intern. Rubber Congr., London*, 1911, pp. 344–50.
(2) Van Rossem, A., and Beverdam, H. B., *Rubber Chem. Tech.*, 4, 147–55 (1931).

RECEIVED June 18, 1936. Presented before the Division of Rubber Chemistry at the 91st Meeting of the American Chemical Society, Kansas City, Mo., April 13 to 17, 1936.

A Standard Quinhydrone Electrode

VERNER SCHOMAKER AND D. J. BROWN
Avery Laboratory of Chemistry, University of Nebraska, Lincoln, Nebr.

IT WAS the authors' purpose to prepare an electrode readily without use of balance or volumetric apparatus. Of those studied, a quinhydrone half cell in which the solution is potassium tetroxalate, saturated at 0°, was found to be very satisfactory.

The saturated calomel electrode was used as the reference half cell. In all the determinations the calomel half cells were of the same reproducibility as those prepared by Samuelson, (*5*) and the same precautions were used in their preparation. The value $+0.2446 + 0.00020\ (t - 25)$ was used to calculate the values for the quinhydrone electrode (*1*, *2*). However, if the temperature coefficient of the hydrogen electrode at all temperatures is called zero, the temperature coefficient of the saturated calomel half cell is -0.66 mv. per degree (*6*). Values on this basis are also included.

Since the authors were attempting to prepare a half cell for general laboratory use, ordinary distilled water was used.

Eastman's quinhydrone was carefully recrystallized from water. However, observations made using the quinhydrone as received varied less than 0.1 mv. from the purified product.

A sample of the best grade of potassium tetroxalate (Merck) was twice recrystallized. The resulting salt, the original material, and salts from other sources, including a very old sample (Eimer and Amend), all gave the same results.

A solution of potassium tetroxalate nearly saturated at room temperature was placed in an ice bath, vigorously stirred for 2 or 3 hours, and then decanted through a glass tube which contained a plug of carefully washed cotton.

A "nest" of half cells, similar to those used by Samuelson (*5*), was prepared for each type of solution, and these half cells were measured against one another. The average deviation in millivolts during a series of observations is included in Table I. One of these was then compared with one of a nest of calomel half

cells which had been likewise interchecked and found to have a very small average deviation.

A sufficient quantity of the tetroxalate solution for several half cells was saturated with quinhydrone, and several half cells were filled. The balance of the solution was used to wash the platinum foil electrodes, which were prepared as directed by Morgan, Lammert, and Campbell (*4*) and kept in water. Before use they were thoroughly washed with the solution of the half cell, but when transferred from one solution to another they were washed thoroughly with the latter solution only. To detect possible misbehavior of the electrodes, they were checked against one another in some of the solution before each run, and were not used until they agreed within 0.02 mv.

The liquid junction between the nest of calomel electrodes and of the quinhydrone electrodes was effected by means of "glass-stoppered" salt bridges built according to the directions of Irving and Smith (*3*).

A Leeds & Northrup Type K potentiometer equipped with a type R galvanometer was used in connection with a calibrated Weston cell.

The potential of the tetroxalate-quinhydrone electrode was calculated at 25° C. and its temperature coefficient expressed either absolutely (*1*, *2*) or relatively to the hydrogen electrode at all temperatures as zero (*6*).

The resistance of the cell was found to be comparatively low. If a current of 0.1 microampere, sufficient to deflect the galvanometer 3 cm. on the scale, flowed for 20 seconds, the maximum effect was 0.05 mv. This polarization disappeared within 20 seconds, or more quickly if stirred.

The new half cell is very easily prepared without use of balance or volumetric apparatus. The materials are easily obtainable. While the temperature coefficient is high, so is that of the half cells to be measured, and, since in ordinary work the temperature coefficients are not considered, the observed values will be more nearly true than if the comparison half cell had a lower value. For these reasons the authors believe this quinhydrone–potassium tetroxalate electrode is very suitable for ordinary laboratory work.

Table I. Quinhydrone Electrode

Temp.	E. m. f. Observed	Average Deviation	E. m. f. of Calomel I[a]	E. m. f. of Calomel II[b]	E. m. f. I[a]	E. m. f. II[b]
		Mv.				
0	0.36566	0.07	0.2396	0.24625	0.60526	0.61191
25	0.35236	0.04	0.2446	0.2446	0.59696	0.59595
35	0.34743	0.06	0.2466	0.2380	0.59403	0.5854

$$\frac{\Delta E_{I}}{\Delta T} = -0.31 \text{ mv. degree}$$

$$\frac{\Delta E_{II}}{\Delta T} = -0.1.17 \text{ mv. degree}$$

[a] Absolute.
[b] Relative to hydrogen electrode.

Literature Cited

(1) Ewing, W. W., *J. Am. Chem. Soc.*, **47**, 301 (1925).
(2) Fales and Mudge, *Ibid.*, **42**, 2434 (1920).
(3) Irving and Smith, Ind. Eng. Chem., Anal. Ed., **6**, 480 (1934).
(4) Morgan, Lammert, and Campbell, *J. Am. Chem. Soc.*, **54**, 910 (1932).
(5) Samuelson, G. J., *Ibid.*, **57**, 2711 (1935).
(6) Vellinger, E., *Arch. phys. biol.*, **2**, 119 (1926).

Received August 8, 1936.

Determination of the Ash Content of Sugar Products

A Standardized Sulfated Ash Method

R. VALDEZ[1] and F. CAMPS-CAMPINS,[2] Massachusetts Institute of Technology, Cambridge, Mass.

Experiments showed that the sulfated ash method needed to be standardized as to the time and temperature of heating of the resulfated ash. A standard method was worked out, based on the thermal decomposition of pure sulfates. A technic was devised for ashing large amounts of low-ash samples. The method is suitable for ash adsorption studies, etc., where precision measurements are necessary.

The methods for the determination of the ash content of sugar products are of two types—i. e., gravimetric and conductometric. As the latter is interpreted in terms of the former, it is obvious that gravimetric methods are the basis of all quantitative ash measurement. There are two gravimetric methods—the carbonated ash method and the sulfated ash method.

Carbonated Ash Method. Browne and Gamble (*2*) have shown that the ash content as measured by the carbonated ash method is affected by the partial and variable loss of chlorine, nitrogen, and sulfur from the sample during incineration. Thus the percentages of these constituents so lost vary according to the method of burning and the nature of the bases with which these elements are combined. This means that the method is unsuitable for the determination of comparable values of the ash content at various stages of the fabrication process or before and after treatment with some ash adsorbent. For these reasons the use of the method has been discontinued.

Sulfated Ash Method. In this method (*1*) the partly dried sample of sugar product is moistened with concentrated sulfuric acid and then incinerated till a white ash is obtained. This ash is taken up with a few drops of sulfuric acid—i. e., resulfated. The excess acid is driven off by heating and the weight of ash recorded.

All the volatile constituents of the ash are driven off by the acid treatment. Obviously, owing to the variation in the composition of the sulfatable salts as well as the amounts of the inert matter present, there is no correlation between the sulfated and carbonated ash values.

Purpose of Resulfation

In the ash obtained by the decarbonization of the sulfated sugar product, qualitative tests have shown (1) the presence

[1] Present address, Central Valdez, Guayas Prov., Ecuador.
[2] Present address, National Adhesives Corp., New York, N. Y.

of sulfides; this is in accord with the findings of Schweizer (*3*); and (2) the presence of chlorides in the case of low-grade products—e. g., molasses—hydrogen chloride fumes being liberated when sulfuric acid is added to the ash.

This means that resulfation of the ash effects its sulfation by the conversion of sulfides into sulfates and by driving off volatile constituents when the addition of sulfuric acid to the sugar product is ineffective, inadequate, or absent. Any sulfuric acid added to the sugar product reacts during the decarbonization process, not only with the ash but also with the decomposing sucrose; and the latter is by far the predominating component. This explains the presence of chlorides and sulfides in the ash prior to resulfation, and the discrepancy in the results when resulfation is not used.

Standardization of Method

The need for the standardization of the time and temperature of heating of the resulfated ash is brought out by the following experiment: A sample of raw cane sugar was sulfated and ashed and the ash so obtained was heated for the time and temperature specified, resulfation of the ash being performed prior to each heat treatment.

Table I. Resulfation

	Temperature of Heating		Time of Heating	Weight of Ash
	° F.	° C.	Hours	Gram
Before resulfation	1000	538	5	0.376
Ash resulfated	580	304	4	0.450
	1200	649	2	0.387
	1480	804	1	0.384

A typical result is given in Table I, which shows that apart from the gain in weight on resulfation, the weight of the resulfated ash is a function of the time and temperature of heating; and that the rate of decomposition of the sulfates increases with increase in temperature. The most striking feature is that the result at 580° F. (304° C.) is some 17 per cent higher than the value at 1480° F. (804° C.).

Further experiments were carried out to note whether (1) the ash weights approach a constant value as the temperature rises—i. e., a weight at which the salts that tend to decompose are decomposed—and (2) the position of the ash in the muffle furnace has any bearing on its weight.

The resulfated ash from a raw sugar solution was heat-treated as shown in Table II.

Table II. Heat Treatment of Resulfated Ash

Temperature	Time	Weight of Ash		
		I[a]	II	III
° F.	Hours	Gram	Gram	Gram
580	4	0.1807	0.1801	0.1812
580	20	0.1767	0.1776	0.1782
1000	2	0.1512	0.1521	0.1517
1000	20	0.1507	0.1511	0.1502
1480	1	0.1477	0.1481	0.1479
1480	16	0.1458	0.1464	0.1472

[a] Position in muffle: I, farthest in; III, near mouth.

Further data showed that samples incinerated near the mouth of the muffle possessed in practically all cases higher weights than samples heated well inside the muffle: Ash weight III > ash weight II > ash weight I. Data also showed that an 8 per cent loss in weight occurred between 1500° and 1700° F. (816° and 927° C.).

The conclusions from the above data are (a) the salts do not arrive at a constant state of composition but continue to decompose even when impracticably high temperatures are reached; (b) for a given temperature after a certain time the rate of decomposition of the sulfates is slow; and (c) resulfated samples heated near the mouth of the muffle furnace have larger weights than those heated well inside the furnace. This is explicable on the basis of a temperature gradient in the furnace mainly due to the distribution of the heat insulation.

In order to select the most suitable time and temperature for the heating of the resulfated ash, the thermal decomposition of pure sulfates was studied. The sulfates chosen were those which were known to occur in the ash of sugar products.

Procedure: The weight of the pure sulfate was noted. The salt was then heated for varying times and temperatures, and the weight taken; prior to each heat treatment the sample was resulfated so as to copy the conditions used in the ash determination. The composition of the salt was determined by the ratio of the weight of partially decomposed product to the weight of the sulfate. When the decomposition of the salt was complete, this ratio became equal to that of the ratio of the formula weight of the oxide to that of the sulfate for the salt in question (Table III).

Table III. Summary of Results

Sulfate Used	Weight of Product / Weight of Sulfate	Assumed Formula of Product	Weight of Product / Weight Corresponding to Assumed Formula
4-Hour Heat Treatment at 580° F. (304° C.)			
K_2SO_4	1.45	$K_2S_2O_7$	0.999
Na_2SO_4	1.56	$Na_2S_2O_7$	1
$CaSO_4$	1	$CaSO_4$	1
$MgSO_4$	1	$MgSO_4$	1
$Fe_2(SO_4)_3$	1	$Fe_2(SO_4)_3$	1
$Al_2(SO_4)_3$	1	$Al_2(SO_4)_3$	1
2-Hour Heat Treatment at 1200° F. (649° C.)			
K_2SO_4	1	K_2SO_4	1
Na_2SO_4	1	Na_2SO_4	1
$CaSO_4$	1	$CaSO_4$	1
$MgSO_4$	1	$MgSO_4$	1
$Fe_2(SO_4)_3$	0.40	Fe_2O_3	1
$Al_2(SO_4)_3$	0.84	Al_2O_3	2.82
1-Hour Heat Treatment at 1480° F. (804° C.)			
K_2SO_4	1	K_2SO_4	1
Na_2SO_4	1	Na_2SO_4	1
$CaSO_4$	0.98	$CaSO_4$	0.98
$MgSO_4$	1	$MgSO_4$	1
$Fe_2(SO_4)_3$	0.40	Fe_2O_3	1
$Al_2(SO_4)_3$	0.29	Al_2O_3	1

The choice of the times and temperatures was based on the following facts:

Even after 20 hours at 580° F. both ferric sulfate and aluminum sulfate were practically undecomposed.

After 2 hours at 1200° F., $Fe_2(SO_4)_3$ is converted completely into Fe_2O_3.

After 1 hour at 1480° F., $Al_2(SO_4)_3$ is completely decomposed into Al_2O_3.

The sodium and potassium salts, when heated for less than 4 hours at 580° F. after treatment with sulfuric acid, gave weights greater than required by the formulas $K_2S_2O_7$ and $Na_2S_2O_7$.

These experiments show that the order of decomposition of the sulfates in the resulfated ash as the temperature increased is as follows: (1) sodium and potassium pyrosulfates, (2) ferric sulfate, (3) aluminum sulfate, and (4) calcium sulfate, the temperature range for the decompositions being from 580° to beyond 1700° F.

Table IV. Typical Results

Samples	Ash Weights			Amount Ashed	Purity of Sample	Ash per 100 Grams of Borax in Sample
	A	B	C			
				Cc.		Grams
Crystallizer / Remelt sirup	1.3777	1.3771	....	50[a]	74	4.5
Crystallizer	0.5113	0.5113[b]	....	50[a]	85	1.7
Remelt sugars	0.2470	0.2460	....	50[a]	...	0.8
Raw sugar	0.1248	0.1250	....	50[a]	99	0.4
Granulated sugar	0.0083	0.0083	0.0085	100[c]	99.99	0.01

[a] At 50° Brix.
[b] This sample prior to resulfation showed weights of 0.4790 and 0.4904 due to incomplete sulfation—i. e., the presence of chlorides.
[c] At 61° Brix.

Therefore the time and temperature of heating of the resulfated ash must be standardized; and the most appropriate conditions were 1480° F. for 1 hour. Thus, while reproducible results were obtained for sugar solutions at the two other time-temperature conditions stated, 1480° F. was chosen because it was rapid and because under certain con-

ditions of heating (above about 1200° F.) the ferric oxide in the ash does not resulfate except by digestion of the ash with hydrochloric acid prior to the sulfuric acid treatment.

These experiments also explain the large difference between the ash weights of a sugar solution at 580° and at 1480° F., due mainly to the pyrosulfates of sodium and potassium. The small percentages of iron and aluminum in sugar ash cannot account for the 17 per cent increase in weight between 1480° and 580° F., whereas the percentages of alkali metals range around 30 per cent; so that when we realize that the formation of pyrosulfates can increase this value to 30 × 1.5 = 45 we find therein the main cause of the 17 per cent increase noted above.

Standardized Method

Add a few cubic centimeters of sulfuric acid to the sugar product and decarbonize in the usual way at 1000° F. Add a few drops of sulfuric acid to the carbon-free ash; and drive off the excess acid over a free flame. Heat the resulfated ash at 1480° F. for 1 hour in a muffle furnace, cool in a desiccator, and weigh.

To test this procedure on a wide variety of samples, a method was devised for the carbonization of large amounts of low-ash samples.

Drop Method. For samples of low ash content, the amount of sample carbonized and ashed must necessarily be large if an appropriate weight of ash is to be obtained.

The solution of the sugar product (say at 50° Brix) plus a few cubic centimeters of sulfuric acid was allowed to drop slowly from a pipet into a platinum dish heated over a small open flame so as to bring about the dropwise carbonization of the sample without any sputtering. In this way some 60 to 100 grams of the sample were carbonized in a dish of 100-cc. capacity. The admixture of the acid with the sample facilitated the charring of the drops in the heated dish. The rate of dropping was regulated by a screw clamp which saddled a piece of rubber tubing placed over the top of the pipet.

Precision of Standardized Method. Duplicate ash determinations agree to within 0.5 per cent. Where the ash weight was too low for this precision, the results checked within the precision of weighing. A few typical results are shown in Table IV. The method was successfully applied to char-treated liquors.

Precautions. As it is not practicable to eliminate the temperature gradient in the muffle furnace, trouble from this source must be minimized by using one zone (say two or three platinum dishes deep) in the muffle for all determinations.

Too rapid heating is the source of loss of sample by spattering in the decarbonization process, as well as in driving off the excess sulfuric acid after resulfation. Some charred matter is lost if the carbonized sample is inserted into too hot a muffle furnace [1000° F. (538° C.) is recommended].

Conclusions

The sulfated ash method using resulfation of the ash is capable of giving results differing by 17 per cent or more, depending on the time and temperature of heating of the resulfated ash.

The heating of the resulfated ash for 1 hour at 1480° F. (804° C.) yields all the sulfatable metals as sulfates except iron and aluminum, which are completely decomposed into the oxide. Duplicate results agree to 0.5 per cent when the ash weights can be determined with that precision.

Large amounts of low-ash samples can be carbonized by using the drop method. In this way ash determinations can be carried out with great precision on low-ash samples.

No account is taken of the chemistry of phosphates. There is evidence that $Ca_3(PO_4)_2$ on treatment with sulfuric acid yields sulfate and pyrophosphate, with a gain in weight depending on the amount of transformation.

Literature Cited

(1) Assoc. Official Agr. Chem., Official and Tentative Methods of Analysis, 3rd ed. (1930).
(2) Browne, C. A., and Gamble, C. A., *Facts About Sugar*, **17**, 552–4 (1923).
(3) Schweizer, A., *Java Archief*, **24**, 214–16 (1924).

Received March 18, 1936. Abstract of a thesis presented by R. Valdez in partial fulfillment of the requirements for the degree of master of science, Massachusetts Institute of Technology.

Effect of Time on the Iodometric Method of Sugar Analysis

HOKE S. MILLER, Columbia University, New York, N. Y.

THE iodometric method of sugar analysis is based upon the oxidation of aldose sugars to their corresponding acids by an alkaline solution of iodine according to the following reaction:

$$RCHO + I_2 + 3NaOH \longrightarrow RCOONa + 2NaI + 2H_2O$$

Since ketose sugars are only negligibly affected under controlled conditions, a number of investigators (*1*, *2*, *5*) have in this way proposed a method of identifying and quantitatively determining aldose sugars in the presence of ketoses. There is a voluminous literature concerning the merits and demerits of various alkali media, while investigators have apparently touched only sparingly upon the question of the relative ease by which different members of aldose sugars are oxidized under identical conditions.

Using sodium carbonate as an alkaline medium, Cajori (*2*) calls attention to the fact that the oxidation of maltose by iodine proceeds more slowly than the oxidation of glucose. Where glucose was completely oxidized in 25 minutes, maltose under the same conditions required 35 minutes. This question of time is an important one and should not be overlooked. The author presents data showing the relative length of time between the oxidation of glucose and lactose by an alkaline solution of iodine under the same conditions.

Chemicals

All chemicals used were C. P. quality corresponding to the following descriptions:

Iodine–potassium iodide solution: 12.69 grams of iodine plus 16.60 grams of potassium iodide, dissolved in distilled water and diluted to a liter.

Sodium thiosulfate solution: 24.8 grams of sodium thiosulfate pentahydrate, dissolved in distilled water, heated to boiling, cooled, and diluted to 2 liters.

Sodium hydroxide solution: 0.1 *N* sodium hydroxide, prepared from the corresponding saturated solution free from carbonate.

Glucose: The $[\alpha]_D^{25°}$ of the glucose (10 grams in 100 cc. of solution) was found to be 52.45.

Lactose monohydrate: The $[\alpha]_D^{25°}$ of the lactose monohydrate was 52.90.

Sucrose: Optical measurements showed it to be 99.68 per cent pure.

Potassium dichromate solution: The potassium dichromate was recrystallized from water and dried overnight in an oven at 100° C., after which 3.8639 grams were dissolved in distilled water and diluted to 1 liter. This solution was used as a primary standard against which the thiosulfate solution was standardized.

Starch solution was prepared fresh daily.

Procedure

The procedure adopted was essentially that employed by Kline and Acree (*3*). Twenty-five cubic centimeters of the sugar solution were pipetted into a 250-cc. ground-glass stoppered flask, to which were added the iodine and sodium hydroxide solutions successively in approximately 4- and 7-cc. portions, respectively, with shaking after each addition. All the experiments were performed at 25° C. The length of time indicated in Tables I to V was reckoned from the time the iodine and alkali were added to the sugar solution until the solution was made slightly acid with sulfuric acid, the iodine unused being titrated immediately afterwards with the standard thiosulfate solution.

Some typical results obtained with the dextrose are shown in Table I. It is significant to note that 8 minutes is the optimum length of time for practically complete oxidation under the conditions employed. When a shorter length of time was allowed incomplete oxidation resulted, while on the other hand, if the oxidation was prolonged beyond 8 minutes, overoxidation was indicated.

Table I. Typical Results with Dextrose

(100.0 mg. of dextrose, 35 cc. of 0.1 *N* sodium hydroxide, and 20 cc. of 0.1 *N* iodine)

Time of Reaction	Dextrose Found	Error
Min.	*Mg.*	*Mg.*
8	99.5	−0.5
	99.3	−0.7
	99.6	−0.4
	99.6	−0.4
	99.5 ± 0.1	

Table II. Typical Results with Lactose

(100.0 mg. of lactose·H_2O, 35 cc. of 0.1 *N* sodium hydroxide, and 20 cc. of 0.1 *N* iodine)

Time of Reaction	Lactose·H_2O Found	Error
Min.	*Mg.*	*Mg.*
8	88.7	−11.3
	93.6	−6.4
	96.1	−3.9
	92.0	−8.0
	91.1	−8.9
	88.3	−11.7
	95.6	−4.4
	92.2 ± 7.8	

Table III. Results with Lactose

(100.0 mg. of lactose·H_2O, 35 cc. of 0.1 *N* sodium hydroxide, and 25 cc. of 0.1 *N* iodine)

Time of Reaction	Lactose·H_2O Found	Error
Min.	*Mg.*	*Mg.*
8	98.6	−1.4
15	100.9	+0.9
15	99.2	−0.8
15	99.4	−0.6
15	99.4	−0.6
15	99.9	−0.1
15	100.0	0.0
30	102.6	+2.6
30	102.9	+2.9
30	102.6	+2.6
30	103.0	+3.0
60	103.1	+3.1
60	103.4	+3.4
60	103.6	+3.6
60	103.4	+3.4

Table IV. Results with Glucose and Lactose

(50.0 mg. of lactose·H_2O, 50.0 mg. of glucose, 35 cc. of 0.1 *N* sodium hydroxide, and 25 cc. of 0.1 *N* iodine)

Time of Reaction	Lactose·H_2O Found	Glucose Found	Error
Min.	*Mg.*	*Mg.*	*Mg.*
15	48.9	48.9	−1.1
	49.0	49.0	−1.0
	48.9	48.9	−1.1
	49.0	49.0	−1.0
	49.0	49.0	−1.0
	49.0 ± 1.0		

Table V. Effect of Sucrose

(50.0 mg. of glucose, 50.0 mg. of lactose·H_2O, 100.0 mg. of sucrose, 35 cc. of 0.1 *N* sodium hydroxide, and 25 cc. of 0.1 *N* iodine)

Time of Reaction	Lactose·H_2O Found	Glucose Found	Error
Min.	*Mg.*	*Mg.*	*Mg.*
5	50.0	50.0	0.0
5	49.2	49.2	−0.8
5	51.9	51.9	+1.9
15	53.8	53.8	+3.8
15	54.0	54.0	+4.0
15	52.9	52.9	+2.9

Employing the same length of time for the oxidation of lactose as for the oxidation of glucose, all other conditions being equal, it was found that about 8 per cent of the lactose was not oxidized, as is shown in Table II.

The results given in Table III show that even with an increase in the amount of iodine used the lactose is not completely oxidized in 8 minutes, but requires 15 minutes for optimum oxidation. Beyond 15 minutes high results occurred, similar to those reported by Slater and Acree (*4*) when excess alkali was used.

When a mixture of equal weights of glucose and lactose monohydrate was subjected to the iodometric method of sugar analysis as outlined in this report, it was found that after 15 minutes the oxidation of each sugar, calculated on the basis that each sugar is oxidized according to its chemical equation, was about 2 per cent short of complete oxidation. Typical results are shown in Table IV.

When 100 mg. of sucrose were added to the mixture of 50 mg. of glucose plus 50 mg. of lactose monohydrate, complete oxidation was indicated within 5 minutes and overoxidation within 15 minutes. This increase in oxidation cannot be attributed wholly to sucrose alone, since under similar conditions sucrose gave only an apparent amount of dextrose equivalent to 0.3 ± 0.1 mg. (5 measurements). Results are recorded in Table V.

Summary

Experimental data show that the oxidation of lactose monohydrate by an alkaline solution of iodine proceeds more slowly than does the oxidation of glucose.

A mixture of equal weights of glucose and lactose monohydrate is more difficult to oxidize by an alkaline solution of iodine than either separately, while a mixture of these sugars in the presence of sucrose gives complete oxidation within 5 minutes and overoxidation within 15 minutes.

Literature Cited

(1) Auerbach, F., and Bodlander, E., *Z. angew. Chem.*, **36**, 602 (1923).
(2) Cajori, F. A., *J. Biol. Chem.*, **54**, 617 (1922).
(3) Kline, G. M., and Acree, S. F., Ind. Eng. Chem., Anal. Ed., **2**, 413 (1930).
(4) Slater, C. S., and Acree, S. F., *Ibid.*, **2**, 274 (1930).
(5) Willstätter, R., and Schudel, G., *Ber.*, **51**, 780 (1918).

Received July 20, 1936.

MICROCHEMISTRY

Photomicrograph
by courtesy of
A. A. Benedetti-Pichler

Oxalic Acid

A Micromethod of Gas Analysis Adapted for Biological Studies

M. H. SEEVERS AND R. T. STORMONT, University of Wisconsin, Madison, Wis.

IN ADAPTING the principles of the method of micro-analysis of gases, described by Blacet and Leighton (*1*), to biological studies, it became necessary to devise methods of sampling and transporting of samples which were suitable to such investigations. Whereas the original apparatus used by these authors is relatively simple, its manipulation is rather tedious for routine analysis. Several modifications of their apparatus have been suggested by the original authors (*2*, *3*) and by Swearingen, Gerbes, and Ellis (*4*), who used a horizontal buret to replace the vertical one, thus obviating the necessity of raising and lowering the mercury reservoir. The present authors feel that this feature has many advantages, not the least of which is the saving of the physical energies of the analyst. Modifications which were found over a 3-year period to be most applicable in the accomplishment of rapid and accurate analysis of a large number of samples have been incorporated into the present apparatus.

Improvements have been made in methods of sampling, transport of samples, introduction of the reagents into the gas, and activation of the mercury thread. The maintenance of a constant temperature in the water jacket eliminates one correction factor and tends to increase accuracy. Since four absorptions may be in progress simultaneously, the time ordinarily consumed in this part of the analysis is materially shortened. Certain inherent limitations of the dry method, as regards the analysis for water vapor, are discussed.

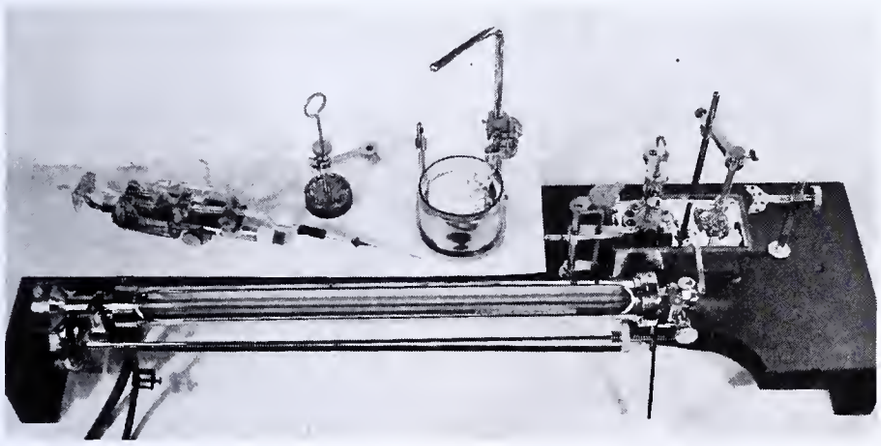

FIGURE 1. THE APPARATUS

Apparatus

The assembled analysis apparatus, sampler, and sample carrier may be seen in Figure 1.

The details of the microburet, drawn to scale, are shown in Figure 2. The whole unit is rotated around the horizontal axis of the capillary on the bearings, *NN*, by the lever, *P*. The unit may be easily removed from the bearings, for cleaning the buret, by release of the thumbscrews. The extent of rotation of the unit is limited by the adjustable stop, *H*, to prevent damage to the capillary arm. This arm is further protected by the support, *I*.

The microburet is of 0.66-mm. capillary Pyrex tubing, fused to a 2-mm. capillary at the manipulator end to prevent the accidental aspiration of the sample into the manipulator reservoir. The portion of the capillary used for volume measurements has a capacity of 0.18 cc. and is enclosed in an ordinary 50-cc. buret with scale divisions which completely encircle the buret to prevent parallax. Both capillary and reading buret are further enclosed in a heavy glass water jacket which fits snugly into a rigid brass tube, threaded at both ends for the brass end caps and cut away on both sides, as indicated, to allow for reading of the buret. The glass parts are thus held rigidly in place between two rubber gaskets when the end plate nearest the buret tip is screwed into place. Manipulation of the thumbscrew, *R*, results in pressure on the 18-gage Allegheny metal diaphragm, *L*, and activation of the mercury thread. The metal diaphragm is much superior to any of the numerous contrivances which the authors have utilized to activate the mercury thread, since there are no parts to replace and hysteresis is reduced to a minimum.

The manipulator reservoir is machined from a steel block, open at the end to receive the plate, *T*, which may be conveniently removed to allow for cleaning of the capillary. A thin cardpaper gasket, saturated with de Khotinsky wax, and sealed into place after warming the metal parts, effects a mercury-tight union of both the end plate and the diaphragm with the reservoir. In assembling, the capillary tube is inserted through the unit and spaces *VV* are filled with sealing wax over a rubber gasket. Mercury is introduced into the apparatus through the opening at the top of the manipulator reservoir and sealed with a tight-

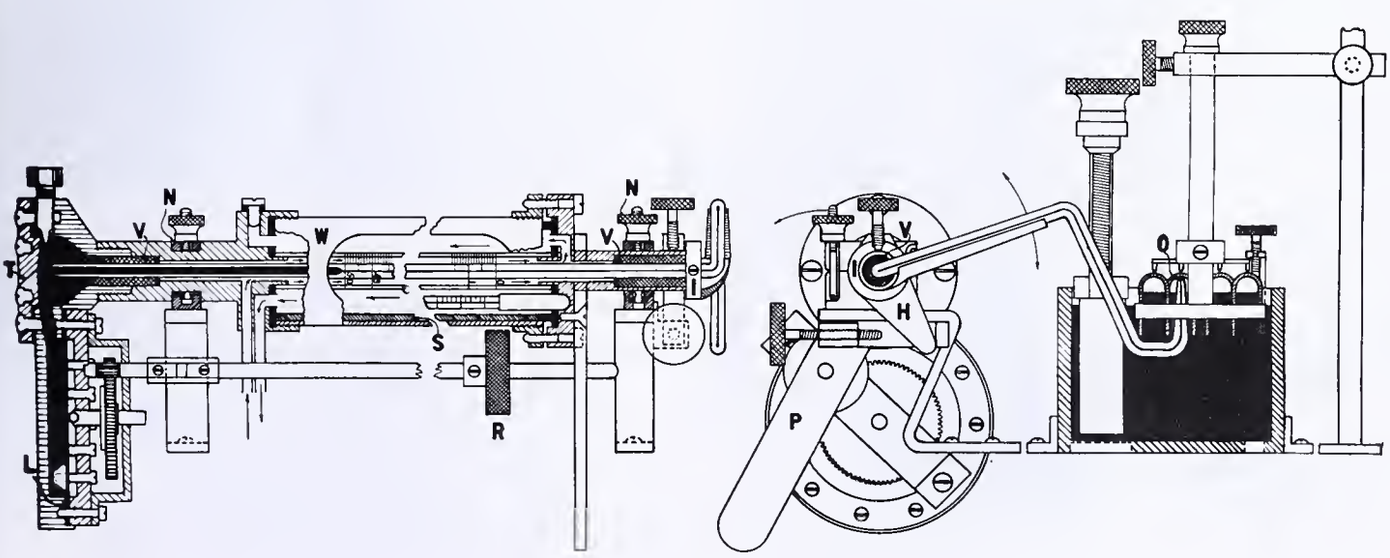

FIGURE 2. DETAIL OF BURET

fitting needle valve. As indicated by the arrows in the diagram, water from a constant-temperature bath circulates by gravity feed between the capillary and the reading buret and returns to the outlet through the space between the reading buret and the outer jacket. It empties into a reservoir from which it is elevated to the bath by a water pump. Forced pumping through the apparatus results in so much bubbling as to make reading difficult.

The relation of the microburet to the absorption reservoir is shown in Figures 2 and 3.

By rotation of the buret unit around its horizontal axis, the buret tip may be introduced into any capsule of either the sample carrier, *N*, or the capsule holder, *Q*, since the latter two have not only a vertical axis of rotation, but are free to describe an arc around their respective supporting rods.

Absorption of the various constituents is accomplished in the four capsules in the holder, *Q*, which is shaped like a segment of a circle to allow vertical passage of the bead holders when the capsules are turned toward the buret tip. The four capsules are held in the same horizontal plane by the stops, *A*. The capsules in this holder, as in the carrier, are held firmly in place by a coiled spring and ball bearing, *W*. The authors have found this to be a most satisfactory method of holding the capsules firmly and still allowing for easy removal. Steel forceps made from a sponge clamp are used to handle the capsules, which are filled by slowly inverting under mercury before insertion into the holder. Care must be exercised to prevent small air bubbles from adhering to the walls of the capsule during this procedure.

The interchangeable bead holders are of glass tubing fastened into the metal shank with wax, or preferably an adjustable rod of stainless steel fastened to the bead-holder arm by means of a set screw. The platinum tip is of sufficient length that the glass portion of the holder does not enter the sample. The bead holders are of uniform size and shape and held in fixed position by two pins upon the cross arm *T* (Figure 3) which is raised or lowered by the rack and pinion. It is thus possible to insert four beads into the absorption capsules without any bead coming in contact with the inner surface of the capsules. As reported repeatedly, such an occurrence ruins the analysis. The level of the mercury in the reservoir may be changed by raising or lowering the Bakelite block, *K*. This provision is necessary in order to maintain a constant level of mercury in the reservoir.

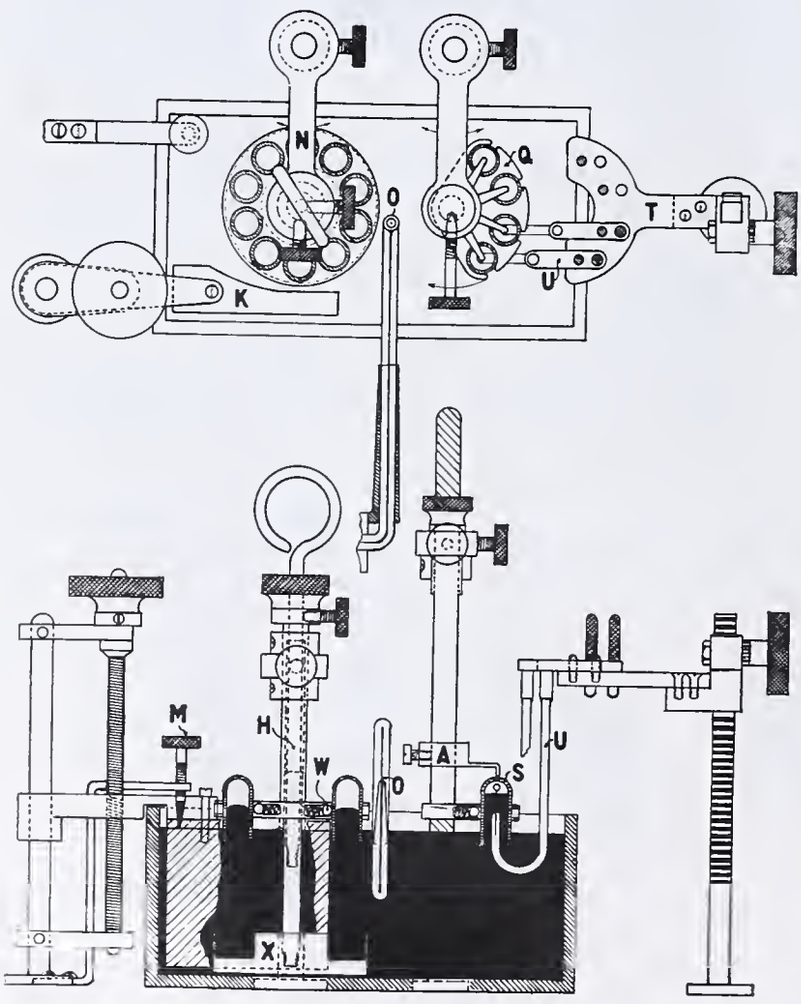

Figure 3. Detail of Absorption Reservoir

Sampling, Transporting, and Drying the Gas

The sampler in Figure 4 was devised for convenience in taking a large number of samples from gas depots in the skin or some body cavity where 2 or 3 cc. of gas were available for each sample. If desired, it could be made on a scale to handle smaller volumes.

The needle, *A*, with lateral openings near the tip, is fastened into the short section of glass capillary with a metallic oxide dental cement. Before sampling, the needle unit, which is detachable to allow of sterilization, is connected to the sampler by a short section of gum-rubber pressure tubing. The entire apparatus, excepting the needle, is then completely filled with mercury. The mercury is activated by pressure exerted on the heavy gum-rubber tubing enclosed in the brass tube by the thumbscrew, *G*, the action being similar to that of a fountain pen pouch in its barrel. The diagrams in Figure 4 are largely self-explanatory. Stopcock *C* is of convenience in cleaning the apparatus without dismantling the reservoir.

After the needle is introduced into the source of the gas to be sampled, 1 or 2 cc. are aspirated into bulb *M* to wash air from the needle or any bubbles which may be trapped at the rubber connection. This gas is discarded. The sample is then drawn into bulb *R*, from which it is subsequently discharged through tip *E* into the capsule of the sample carrier.

The sample carrier is transported in the mercury reservoir as indicated in Figure 4. The central shaft of the carrier rotates about its vertical axis and is fixed by the thumbscrew, *Z*. The rod, *H*, is threaded into the Bakelite shaft and trough, *X*. Release of the thumbscrew, *P*, allows the trough to be raised or lowered to seal the open ends of the sample capsules. As is discussed below, it is essential, if accuracy is not sacrificed, that all water vapor be removed prior to introduction of the sample into the microburet. By means of the rack and pinion, four bead holders carrying phosphorus pentoxide beads may be introduced simultaneously into four samples. Accurate centering of the capsules over the beads is obtained by bringing a mark on the sample carrier into a definite positional relationship with the indicator, *F*, and fixing thumbscrew *Z* prior to insertion of the bead holders into the mercury. The whole carrier may then be swung clear on its supporting shaft to allow insertion of the bead holders into the mercury.

If two sample carriers are available, dehydration of four samples may be accomplished while the analysis of four others is in progress. Extra carriers are also of value in collecting and storing numerous samples. After removal of water vapor, trough *X* is elevated into position to seal the capsules, the entire carrier is transferred into the large absorption reservoir of the analysis apparatus, and the trough is lowered away from the capsules. The level of the mercury in the reservoir is then brought to the ivory tip, *M*, by raising or lowering the Bakelite block, *K*.

The Analysis

A detailed account of the technic of analysis and the preparation of the reagents for the various gases which have been satisfactorily analyzed will be found in the papers of Blacet et al. The following short description outlines variations from the procedure only in so far as mechanical changes make such clarification necessary.

The tip of the dry mercury-filled capillary is introduced into one of the capsules of the carrier and a sample of the previously dried gas is drawn to a predetermined mark on the reading scale. The tip is lowered into the reservoir and mercury is drawn in until the entrapped sample lies between two points in the reading scale. All readings are made at a pressure slightly below atmospheric, represented by the difference in level between the sample in the capillary and the surface of the mercury in the reservoir. The tendency of the mercury thread to stick to the walls of the capillary and fail to assume a constant pressure is overcome by vibration induced by gentle tapping of the handle, *P*. After reading the volume, the sample is discharged into a mercury-filled capsule in holder *Q* (Figure 3). Four

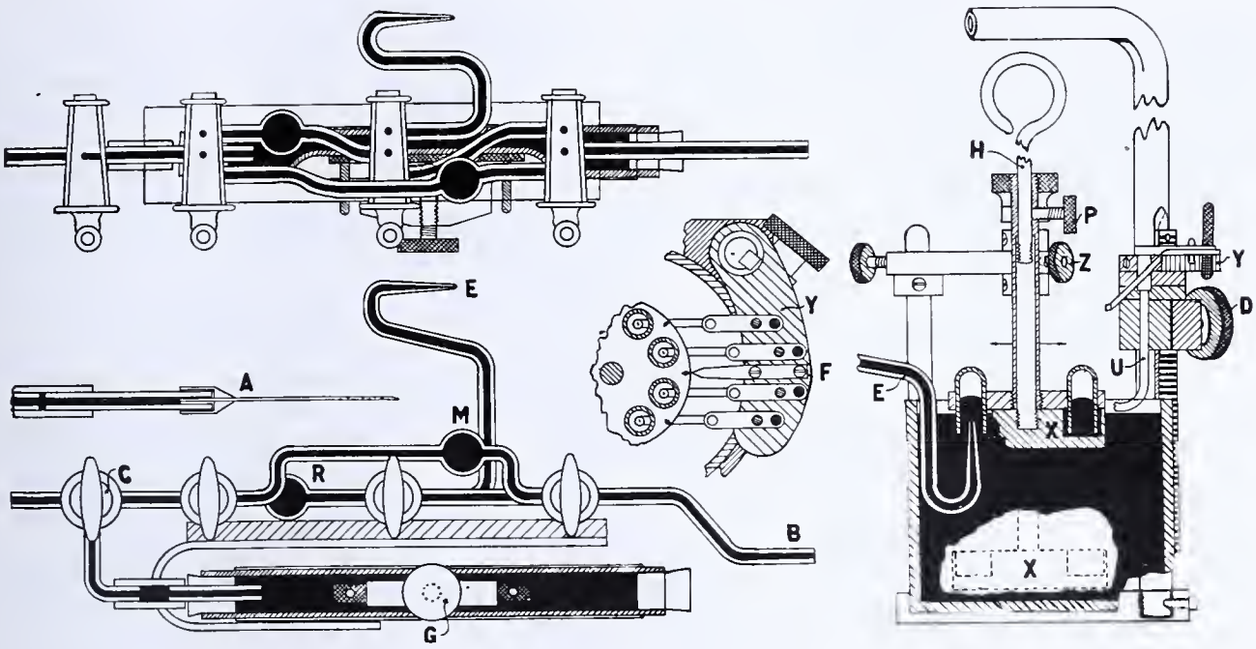

FIGURE 4. DETAIL OF SAMPLER AND SAMPLE RESERVOIR

samples are measured thus, care being taken to adjust the mercury level to the ivory tip, *M*, at each reading.

The dry reagent for the particular constituent to be removed is fused into the platinum loops of the four bead holders and they are placed in position under the mercury. Capsule holder *Q* is now rotated into position over the four bead holders and the beads are elevated into the gas sample. Following absorption, the residual gas is drawn into the buret, the volume reading made, and the gas discharged into the same capsule. Particular care at this reading is taken to see that the mercury level is the same as during the original reading. The position of the thumbscrew, *R*, in relation to the handle, *P*, is such that both raising and lowering of the buret tip and the activation of the mercury thread are accomplished without change of position of the right hand, thus leaving the left hand free to alter the position of the capsules in relation to the tip.

Discussion of Results

Blacet and Leighton stress the fact that the normal vapor pressure of water cannot be assumed to exist in these reacting systems. They did not, however, lay particular emphasis upon the necessity of keeping the microburet absolutely free from moisture, although this may be inferred from their data.

The representative results in Table I indicate the source and magnitude of the error which occurs in the analysis when a wet gas is introduced into a dry buret and vice versa. Four wet samples of identical composition were measured successively into the capillary, which was initially dry, and discharged into four dry capsules. After removal of water vapor by phosphorus pentoxide, they were again drawn, in the same order, into the capillary (which is now wet) for volume reading. As noted in Table I, the contraction in volume increases progressively from the first to the fourth sample.

TABLE I. EFFECT OF INTRODUCING A WET SAMPLE INTO A DRY BURET ON THE SUBSEQUENT ANALYSIS FOR CARBON DIOXIDE

Sample	1	2	3	4
	%	%	%	%
P_2O_5 absorption	0.20	0.50	0.72	0.83
KOH absorption	7.42	7.22	7.05	7.05

The contraction in volume of the first sample was the smallest because it not only contributed the greater portion of its water vapor to the initial saturation of the dry capillary, thus reducing the initial volume reading for that particular sample, but also took up the largest quantity of adsorbed water when reintroduced into the wet capillary after dehydration. That such an explanation is a tenable one is evident from the progressive diminution in contraction which parallels the former increase when the four samples are subsequently exposed to a potassium hydroxide bead. This bead removes not only the carbon dioxide present, but also the water vapor which was contributed during last contact of the sample with the wet capillary, thus introducing an error in the analysis for carbon dioxide. It might appear to be theoretically possible to determine the absolute quantity of water vapor in any given gas, if the analyst started with a dry capillary and made several passes and absorptions until the capillary was again dry, the result for water vapor being obtained by adding the successive contractions in volume. The authors have never succeeded, however, in even approaching the theoretical figure for water vapor in air saturated at room temperature. It appears that as the sample is drawn into the dry buret, the majority of water vapor is adsorbed onto the dry walls of the capillary arm before the reading portion of the buret is reached. The initial volume determination at this point is in reality made on the dry gas plus the small amount of water vapor which has escaped adsorption in the arm. As might be expected, only a very small contraction in volume is obtained, even though the adsorbed water vapor be subsequently removed from the arm by successive passes, since the total water present in the original sample was not included in the initial volume measurement. Values for water vapor which approach but do not quite equal the theoretical have been obtained by observing the contraction in volume in the capillary arm after sealing the buret tip with a droplet of mercury, thus eliminating the majority of the dead space in which adsorption onto dry walls can occur.

Although it does not appear that the apparatus is suited to the accurate determination of water vapor, the utilization of chemical reactions within the capsule, in which water vapor is one of the end products, is seemingly permissible providing this constituent is removed prior to aspiration of the residual gas into the capillary for volume determination. As discussed by Blacet and Leighton even this procedure has certain limitations.

Determinations were done in quadruplicate on theoretical mixtures made by diluting a given quantity of the dry commercial gas with a known volume of commercial nitrogen, both gases being measured in the microburet. The theoretical purities of the mixtures in Table II are known to be slightly in error, since the commercial gases contain small quantities

of impurities. Cyclopropane was removed with fuming sulfuric acid held in a porous bead. A follow-up potassium hydroxide bead removed the sulfur trioxide fumes. This method is identical to that used by Blacet and Leighton for ethylene and the results are of the same order of accuracy. The authors have experienced considerable technical difficulty in preparing satisfactory sintered-glass beads for introducing liquid reagents and prefer the grog-kaolin bead advocated by Swearingen, Gerbes, and Ellis (*4*).

Table II. Results of Analyses for Carbon Dioxide, Cyclopropane, and Oxygen

Gas Sample	Determinations 1	2	3	4	Mean	Average Deviation from Mean	Theoretical	Theoretical Minus Mean
	%	%	%	%	%	%	%	%
CO_2	9.52	9.43	9.49	9.45	9.47	0.03	9.43	+0.04
	9.37	9.38	9.34	9.38	9.37	0.01	9.47	−0.10
	19.62	19.72	19.75	19.75	19.71	0.04	19.82	−0.11
	19.84	20.00	20.07	20.09	20.00	0.08	20.08	−0.08
C_3H_6	20.15	20.09	20.00	20.02	20.06	0.05	20.22	−0.16
	20.07	20.09	19.83	19.96	19.99	0.09	20.20	−0.21
	9.41	9.43	9.40	9.35	9.40	0.02	9.46	−0.06
O_2 in laboratory air	20.77	20.71	20.73	20.80	20.75	0.03	20.90	−0.15

The apparatus, as described, is substantial and requires little attention to keep in working order. Since it is not necessary to measure absolute volumes, and readings are made on the outer buret, the capillary, if broken, may be quickly replaced by any uniform capillary tubing of 0.5- to 0.7-mm. bore. With a little experience, four samples may be analyzed for carbon dioxide and oxygen in less than 1 hour. Over five hundred samples of 0.05- to 0.15-cc. volume have been analyzed for carbon dioxide and oxygen with gratifying results.

Acknowledgment

The authors are indebted to V. W. Meloche, of the Department of Chemistry, and to J. S. Hipple, Medical School mechanician, for many helpful suggestions.

Literature Cited

(1) Blacet and Leighton, Ind. Eng. Chem., Anal. Ed., 3, 266 (1931).
(2) Blacet and MacDonald, *Ibid.*, 6, 334 (1934).
(3) Blacet, MacDonald, and Leighton, *Ibid.*, 5, 272 (1933).
(4) Swearingen, Gerbes, and Ellis, *Ibid.*, 5, 369 (1933).

Received September 22, 1936. Supported by the Wisconsin Alumni Research Foundation. Demonstrated before the American Physiological Society, Washington, D. C., March 27, 1936.

Microdetermination of Zinc

Comparison of Spectrographic and Chemical Methods

LEWIS H. ROGERS and OWEN E. GALL, University of Florida Agricultural Experiment Station, Gainesville, Fla.

THIS study was undertaken to analyze various plant materials for zinc by two different methods of analysis and to compare the results. The chemical method which was followed employs an iodometric titration (*1*) and is often used for the determination of zinc in plant materials. The spectrographic method which was used (*2*) has been shown feasible for this determination, but is not so well known.

Approximately forty samples have been analyzed by both methods and the results appear in Table I. For about half the samples, there has been fair agreement, but the analyses show wide differences for many of the other samples. In nearly all cases where differences occurred, the spectrographic analyses gave higher results than did the chemical analyses. In an attempt to explain these differences, various possible sources of errors have been considered.

Particularly careful homogenization of the ash of the samples before separating into two portions for the analyses by the two methods has reduced the error from this factor to a minimum.

Possible sources of error in the spectrographic method are: (1) contamination, from the internal standard or from the graphite electrodes; (2) nonuniform distribution of the internal standard throughout the sample; (3) variation of exposure conditions (wandering of the arc, change of line voltage, etc.); (4) influence of varying major constituents of the ash on volatility and "excitability" of the zinc atoms; (5) photometric errors.

The first factor may be controlled by spectrographic examination of the tellurium and of the graphite electrodes for zinc. The influence of the second factor may be lessened by careful homogenization. The fourth factor is to be discussed in another paper, but its effect in all cases studied thus far is not as great as the third factor.

The dispersion of the results of replicate analyses is a criterion of the influence on the method of the second, third, and fifth factors. Some calculated probable errors of the spectrographic method are shown in Table II.

Three-fourths of the samples in group B in Table II had a calculated probable error of less than 10 per cent of the mean, while the average calculated probable error for all sixty-one samples was 8.3 per cent of the mean.

Possible sources of error in the chemical method are: (1) incomplete extraction of zinc, either (a) in the first extraction of the original sample, or (b) in dissolving the zinc sulfide precipitate; (2) contamination, from the various reagents; (3) incomplete precipitation of zinc; (4) precipitation by hydrogen sulfide of other metals which would affect the titration; and (5) titration errors.

As to the first factor, qualitative spectrographic examination of residues from the original hydrochloric acid extraction (the first procedure in the chemical method) of nineteen samples has shown zinc in every residue (last column of Table I, which also gives quantitative spectrographic analyses of eight of the residues). It will be noted that zinc was found in the residues of some samples even though the analyses for the total zinc by the two methods agree. This inconsistency is apparently due to one of the other error factors. Obviously, when only a very small proportion of the ash is insoluble in the acid, the hydrochloric acid extraction procedure may be sufficient, but it seems indicated that a modification of the extraction procedure will be necessary when plant samples with large proportions of acid-insoluble matter are encountered, if a true value of the zinc content is to be obtained.

In view of the data given above, studies of the influence on the chemical method of the other error factors are being held

TABLE I. COMPARISON OF ANALYSES FOR ZINC ON VARIOUS PLANT MATERIALS

(Expressed on ash basis)

Identification	Sample No.	Ash	Mean of 2 Chemical Analyses	Mean of 5–10 Spectrographic Analyses	Calculated Probable Error[a] of Mean of Spectrographic Analyses	Residue from Chemical Analyses after HCl Extraction of 1 G. of Ash	Zinc Found in Residue with Spectrograph
		%	*Mg./g.*	*Mg./g.*	%	*Gram*	*Mg.*
Test sample	1244		0.21	0.29	6.9	Not weighed	Present
Isopappus divaricatus (Nutt.) T. & G.	1266	4.45	0.26	0.38	6.5	Not weighed	Present
	1267	4.19	0.42	0.40	13.0	Not weighed	Present
	1268	5.03	0.21	0.38	11.5	Not weighed	Present
	1269	5.08	0.38	0.45	13.0	Not weighed	Present
Mexican clover, *Richardia scabra* St. Hil.	1240	14.10	0.11	0.12	5.0	Not weighed	Trace
	1242	13.38	0.11	0.11	4.5	Not weighed	Trace
	1243	13.23	0.09	0.09	4.4	Not weighed	Present
	1239	13.10	0.10	0.10	2.0	0.1991	0.04
	1241	13.36	0.14	0.15	4.0	0.1127	0.02
Pods from three species of Crotalaria	1245	3.96	0.28	0.60	5.0	0.0009	Present
Coffeeweed, *Emelista tora* (L.) Britton & Rose	1255	7.99	0.43	0.65[b]	[b]	0.0009	Present
Diodella teres (Walt.) Small	1256	8.33	0.27	>1.0[b]	[b]	0.3753	>0.37
Buzzard grass, *Heteropogon melanocarpus* (Ell.) Benth.	1257	3.96	0.51	>1.0[b]	[b]	0.0759	>0.08
Heterotheca subaxillaris (Lam.) Britton & Rusby	1263	5.82	0.43	0.22	4.3	Not weighed	Present
	1264	6.45	0.33	0.26	12.0	0.0095	0.005
	1265	6.41	0.27	0.22	5.5	0.0199	0.004
Mexican tea, *Ambrina ambrosioides* (L.) Spach.	1276	10.41	0.08	0.14	12.0	0.0211	>0.02
Crotalaria spectabilis Roth.	1258	10.18	0.22	0.18	3.3	0.0099	0.01
	1260	9.89	0.22	0.21	7.6	....	....
Crotalaria striata DC.	1246	4.70	0.26	0.29	6.9	....	....
	1247	4.34	0.15	0.10	3.0	....	....
	1248	5.73	0.21	0.34	10.0	....	....
	1249	4.52	0.25	0.57	7.5	....	....
Crab grass, *Syntherisma sanguinale* (L.) Dulac.	1250	6.94	0.26	>1.0[b]	[b]	....	....
Foxtail, *Chaetochloa lutescens* (Weigel) Stuntz.	1251	9.08	0.42	>1.0[b]	[b]	....	....
Flea bane, *Leptilon canadense* (L.) Britton	1252	5.78	0.56	0.52	3.3	....	....
	1253	6.17	0.51	0.67	6.7	....	....
	1254	5.89	0.43	1.0[b]	[b]	....	....
Crotalaria intermedia Kotschy	1261	5.59	0.25	0.77[b]	[b]	....	....
	1262	6.11	0.32	0.32	17.0	....	....
Ragweed, *Ambrosia elatior* L.	1270	7.53	0.44	0.79[b]	[b]	....	....
	1271	7.68	0.31	0.84[b]	[b]	....	....
	1272	7.39	0.28	0.57	11.5	....	....
	1273	7.15	0.20	0.24	13.4	....	....
	1274	7.30	0.10	0.43	9.1	....	....
Beggarweed, *Meibomia purpurea* (Mill.) Vail	1275	7.44	0.25	0.49	9.8	....	....

[a] Used here to indicate $0.6745 \sqrt{\frac{\Sigma d^2}{n}}$.

[b] One (or more) of the replicates of this sample was off the calibration curve; hence instead of averaging the concentrations, this value was obtained by averaging the density ratios and then determining the average concentration of zinc. For the same reason no calculated probable error is given. A reasonable calculated probable error may be assumed as 15 per cent of the mean.

in abeyance until a more generally applicable extraction procedure has been developed.

Recently, Vanselow and Laurance (*4*) have proposed a modified combination of the two methods which have just been discussed. Their procedure permits the use of spectrographic methods for the determination of zinc in plant materials where only a grating spectrograph (or other spectrograph employing reflection surfaces) is available, since it employs a spectral line of zinc in the near ultraviolet (3345 Å.), whereas the spectral line of zinc employed in this study (2138 Å.) would be almost totally absorbed by the usual reflection surfaces. As pointed out previously (*2*), the zinc line at 3345 Å. is not as sensitive as the zinc line at 2138 Å. In fact, Ruthardt and Hirschmann (*3*) find that the 2138 Å. line is thirty to fifty times more sensitive than the 3345 Å. line. Thus, using the zinc line at 2138 Å., 20 p. p. m. of zinc (on the ash basis) may be determined by spectrographing the ash of the sample, but using the same technic with the 3345 Å. line, a minimum of 500 p. p. m. of zinc may be determined. Reducing the analyses from the ash basis to the dry basis obviously changes both results by the same ratio.

However, few plant ashes contain as much as 500 p. p. m. of zinc; hence to analyze plant materials for zinc using the 3345 Å. line, it is necessary to concentrate the zinc. Vanselow and Laurance find, using the 3345 Å. line and auxiliary chemical concentration, that 1 p. p. m. of zinc (on the dry basis) may be determined. Using the same technic with the 2138 Å. line, it would be possible to determine 0.04 p. p. m. of zinc.

There has never been a plant sample encountered at this laboratory which could not be analyzed for zinc by direct spectrography of the ash using the 2138 Å. line. Accordingly it has never been necessary to introduce any chemical procedure in this determination.

In addition to requiring ten to twenty times more sample per determination and much extra manipulation, the modification combines spectrographic error factors 1, 3, and 5, with error factors 1a, 2, and 3 for the chemical method.

Therefore, the inherent advantages of analyzing for zinc with direct spectrography of the plant ash using the 2138 Å. line (speed, sensitivity, elimination of chemical reagents, fewer manipulations, and fewer possibilities of introduction of contamination) are discarded, and the disadvantages of the chemical method

TABLE II. CALCULATED PROBABLE ERRORS[a] OF THE SPECTROGRAPHIC METHOD

	Sample No.	Number of Replicates	Calculated Probable Error of the Mean
			%
Group A (5 samples)	1892	30	4.4
	1893	30	3.8
	1894	28	5.1
	1895	44	8.5
	1896	30	6.1
	Different Samples	Replicates on Each Sample	
Group B (61 samples)	2	10	0–3
	13	5–10	3–5
	30	5–10	5–10
	14	5–10	10–15
	2	5	15–17

[a] Used here to indicate $0.6745 \sqrt{\frac{\Sigma d^2}{n}}$

are introduced by the lengthy procedure of the Vanselow and Laurance modified combination of the two methods. In fact, there seems to be no advantage in using the spectrograph for the final determination of zinc in place of the iodide titration in the chemical method.

Summary

Comparisons of analyses for zinc by a spectrographic method with analyses for zinc by a chemical method have been made on about forty samples of several varieties of plants. Agreement has been attained on only half the samples. It has been found that zinc is frequently retained in the residue from the hydrochloric acid extraction employed in the chemical method, which may explain some of the lack of agreement between the two methods. A modification of the extraction procedure seems indicated. A discussion of a modified combination of the two methods is given.

Literature Cited

(1) Hibbard, P. L., Ind. Eng. Chem., Anal. Ed., 6, 423 (1934).
(2) Rogers, L. H., *Ibid.*, 7, 421 (1935).
(3) Ruthardt, K., and Hirschmann, H., *Centr. allgem. Path.*, 61, 275 (1934).
(4) Vanselow, A. P., and Laurance, B. M., Ind. Eng. Chem., Anal. Ed., 8, 240 (1936).

Received September 23, 1936.

The Microanalysis of Gases

IV. Nitrous Oxide and Methane

FRANCIS E. BLACET AND DAVID H. VOLMAN, University of California at Los Angeles, Calif.

THE methods of microanalysis of gases previously described (*1*, *2*, *3*) have been extended to include a new procedure for the combustion of gases. This procedure has been applied in the analysis for nitrous oxide and methane and presents the possibility of application in the case of several other gases. It is assumed that the preceding articles are available to the reader and in the interest of brevity reference to them will be made frequently.

Analysis with the aid of a combustion in which an explosion occurs (*1*) has two important limitations. In the first place, the mixture must exceed a certain minimum richness before an explosion will occur. This means that a small percentage of gases such as methane or ethane cannot be detected readily by this method. In the second place, certain gases do not burn completely upon the passage of a spark through the system containing them. These factors may be overcome, however, by carrying out the reaction on a hot surface placed in the system (*4*). This was accomplished, in the present instance, by means of a platinum loop shown in the operating position in Figure 1. Other details of the gas microanalysis apparatus have been described (*3*).

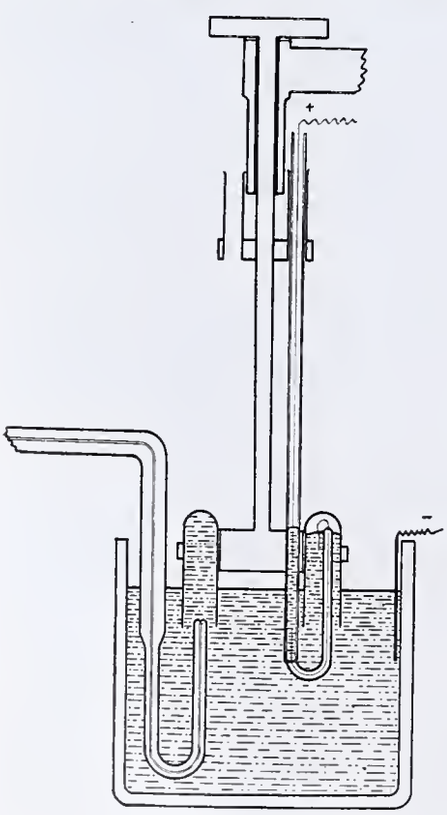

Figure 1. Combustion Coil in Operating Position

The mounting for the platinum was made from a piece of soft glass tubing of the same length and diameter as an absorbent holder (*1*, *3*). A 7-cm. length of 24-gage platinum wire was placed in the tube in such a manner that about 1 cm. of it extended beyond one end of the tube. Starting at this end, a narrow portion of the tubing was heated carefully, so that a fusion of glass to platinum occurred. By slowly moving the tube through the flame the platinum wire was encased in glass for a length of about 5 cm. It is important that no air bubbles be trapped in this process. The glass and wire were then bent to assume the shape shown in the diagram.

The exposed platinum was bent so that the top of the loop was about 1 mm. above the end of the glass and the tip of the loop could be immersed in the mercury within the gas holder. The top of the loop was worked down for a distance of 1 mm. by careful filing and the use of Crocus cloth, until the cross section was approximately one-third of the original. By placing a small amount of mercury in the unconstricted portion of the mounting, electrical contact could be made, as indicated. The large mercury reservoir served to complete the circuit.

In the use of this combustion coil, it was found convenient to have available an electrical potential of about 10 volts and to regulate the glow of the coil by means of a slide wire rheostat placed in the circuit.

In any extensive program involving gas microanalysis it is necessary to save more samples than the main analytical apparatus can accommodate. The authors have solved this problem by using gas holder clips of the type sketched in Figure 2, which will fit on the side of any mercury reservoir in the manner indicated. The clip is made of iron with one piece of watch spring to hold it in place and another to support the gas holder. By means of the pneumatic trough previously described (*2*), gas samples may be transported, without danger of loss or contamination, from a storage reservoir to the analytical apparatus or vice versa.

Specific Methods of Analysis

Nitrous Oxide. It has been suggested that a satisfactory method of microanalysis for nitrous oxide in the presence of air would be very useful in the field of anesthetics (*6*). This problem has been solved by first removing the oxygen and moisture by means of phosphorus and potassium hydroxide (*1*) and then reducing the nitrous oxide with hydrogen gas by the well-known reaction in which nitrogen gas and water are produced (*4*). The procedure up to the analysis for nitrous oxide is identical with that described for oxygen (*1*).

Thereafter, a measured volume of pure hydrogen is added to the sample and the combustion coil placed in position as shown in Figure 1. After adjusting the coil so that a small amount of the glass insulation appears above the mercury surface, the current is turned on and regulated until the thin portion of the platinum wire appears reddish orange in color. With this condition it was found that in all cases complete reduction of the nitrous oxide took place within 4 minutes. Varying the excess of hydrogen does not seem to affect the accuracy of the results in any way and has little effect on the

combustion time. Upon completion of the reaction, the coil is removed and fused potassium hydroxide introduced to remove the water vapor. The volume decrease which is now obtained is a direct measure of the amount of nitrous oxide present in the original sample.

In Table I are given typical results of the analysis of a nitrous oxide sample obtained by heating ammonium nitrate and collecting the gas over mercury after removing the water vapor by means of a carbon dioxide trap. The deviation from a 100 per cent sample is to be expected in this method of preparation of the gas (*5*).

Table II gives results obtained upon analysis of a sample made by diluting the sample represented in Table I with dry air. The theoretical percentage of nitrous oxide present is 20.01, calculated on the premise that the undiluted sample is 99.25 per cent nitrous oxide as indicated in Table I. The oxygen was removed as previously described.

METHANE. It is frequently desirable to estimate the amount of saturated hydrocarbons in small gas samples which do not contain enough of these substances to give an explosive mixture with oxygen. The combustion coil herein described has made this type of microanalysis possible in the case of methane and there is little doubt but that the method may be applied to certain other gases.

The procedure is essentially the same as that employed in the analysis for nitrous oxide, except that the gas to be analyzed in this case is oxidized instead of reduced and hence an excess of oxygen, or carbon dioxide–free air, is added in place of hydrogen. After the water vapor has been removed, the carbon dioxide produced in the reaction is determined in the usual way. This, of course, represents the amount of methane in the original sample. Using a reddish orange coil, it was found that methane was oxidized completely within 2 minutes.

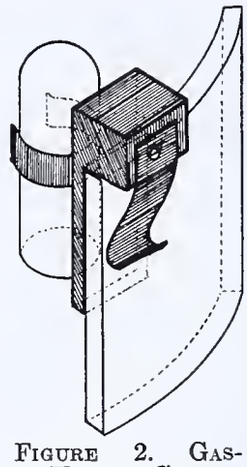

FIGURE 2. GAS-HOLDER CLIP

Mounted on side of storage reservoir

In this work methane was prepared by heating a mixture of sodium acetate and soda lime and collecting the gas over mercury. Table III gives the results of the analysis of the sample thus prepared.

In order to test the value of the method when small amounts of methane are present in a sample, portions of the gas were diluted with known volumes of air and then analyzed. The data thus obtained are shown in Table IV. The theoretical percentage is based on the assumption that the analysis represented in Table III is correct. The close agreement of the experimentally determined percentage with the theoretical appears to validate this assumption.

TABLE I. ANALYSIS OF NITROUS OXIDE PREPARED BY THE DECOMPOSITION OF AMMONIUM NITRATE

Determination	Volume of Sample	Volume of Hydrogen	Nitrous Oxide	Deviation from Mean
	Cu. mm.	*Cu. mm.*	%	%
1	53.73	71.77	99.05	−0.20
2	54.58	71.78	99.56	+0.31
3	54.31	71.20	98.92	−0.32
4	54.13	76.49	99.48	+0.23
		Av.	99.25	±0.27

TABLE II. ANALYSIS OF A MIXTURE OF NITROUS OXIDE AND DRY AIR

Determination	Volume of Sample	Volume of Hydrogen	Nitrous Oxide	Deviation from Mean	Deviation from Theoretical
	Cu. mm.	*Cu. mm.*	%	%	%
1	54.79	47.89	19.60	−0.24	−0.41
2	57.07	50.37	19.96	+0.12	−0.05
3	56.27	49.44	19.87	+0.03	−0.14
			Av.	±0.13	−0.20

TABLE III. ANALYSIS OF METHANE PREPARED FROM SODIUM ACETATE AND SODA LIME

Determination	Volume of Sample	Methane	Deviation from Mean
	Cu. mm.	%	%
1	41.91	96.42	+0.18
2	40.15	96.00	−0.24
3	39.98	96.20	−0.04
4	39.69	96.35	+0.11
		Av. 96.24	±0.14

TABLE IV. ANALYSES OF MIXTURES OF METHANE AND AIR

Determination	Volume of Sample	Methane Theoretical	Methane Determined	Difference
	Cu. mm.	%	%	%
1	62.06	56.52	56.61	+0.09
2	108.53	5.81	5.90	+0.09
3	101.56	3.18	3.22	+0.04
4	101.29	3.19	3.41	+0.22

Discussion

The requirements of the combustion coil are such that it must necessarily be fragile. An attempt was made to attach the end of the loop to the glass insulation of the incoming wire, but for some reason which is not clear, it was more difficult to get the coil up to the desired temperature when this was done. However, with reasonable care one coil will last for a long time when made as described and, when the tip does break off, the rest of the wire can be salvaged in good condition by simply heating the glass and platinum to redness and plunging them into cold water.

The coil is so constructed that the gas may be brought to the desired temperature at the surface of the wire while the mercury and surroundings are kept relatively cool. Because of this the expansion of the gas volume is not great during the course of the combustion and the contamination of the sample, by adsorbed gases which may be driven from the glass surface, is reduced to a minimum. It is important that the glass-enclosed platinum extend beyond the lower bend in the apparatus; otherwise, foreign gases may be introduced into a sample by the development of minute cracks in the glass.

There was no evidence of the oxidation of mercury during the short time required for the reactions of nitrous oxide and methane. However, continuous operation of the coil for 15 minutes or more, gave some evidence of this reaction.

It would appear that this method of analysis may be applied generally in cases where combustible gases are involved. Hydrogen may be determined by the use of oxygen and oxygen may be determined by the use of hydrogen, etc. However, an attempt to analyze for butane by this method was not quantitatively successful. The time required for the reaction to go to completion was of such length that the entire system became hot and oxidation of mercury began to take place. It is possible that further experimentation with conditions would overcome these difficulties.

Literature Cited

(1) Blacet and Leighton, IND. ENG. CHEM., Anal. Ed., 3, 266 (1931).
(2) Blacet and MacDonald, *Ibid.*, 6, 334 (1934).
(3) Blacet, MacDonald, and Leighton, *Ibid.*, 5, 272 (1933).
(4) Dennis and Nichols, "Gas Analysis," New York, Macmillan Co., 1929.
(5) Partington, "Text Book of Inorganic Chemistry," 3rd ed., London, Macmillan Co., 1930.
(6) Seevers, M. H., Department of Pharmacology and Toxicology, University of Wisconsin, Madison, Wis., personal communication.

RECEIVED September 9, 1936.

Determination of Small Quantities of Nicotine by a Silicotungstic Acid Micromethod

JOSEPH R. SPIES, Bureau of Entomology and Plant Quarantine, U. S. Department of Agriculture, College Park, Md.

THE necessity of accurately determining quantities of nicotine of the order of 0.1 mg. in connection with greenhouse fumigation experiments prompted the development of the method to be described. Colorimetric and nephelometric methods are available for the determination of very small quantities of nicotine, but the author believes that, for directness, accuracy, and ease of manipulation, the silicotungstic acid micromethod described here has much to recommend it. Although determinations are started one day and completed the next, the actual time required for making each determination is short.

The silicotungstic acid method is ideal as the basis of a gravimetric micromethod. The solubility of nicotine silicotungstate is very low, the weight of the ignited residue is more than nine times that of the combined nicotine, and since the ignited oxides are not appreciably hygroscopic they can be weighed in an open crucible.

Bertrand and Javillier (*1*) were the first to use silicotungstic acid for the determination of nicotine by a volumetric method, and they suggested the possibility of its use in a gravimetric method. Chapin (*2*) later worked out the experimental conditions for the gravimetric method now recommended by the Association of Official Agricultural Chemists. Bertrand and Javillier observed that the solubility of nicotine silicotungstate is dependent on the acid concentration of the solution from which it is precipitated, and Chapin showed that loss of nicotine due to solubility of the silicotungstate is negligible in the macroprocedure. Preliminary investigation soon made it apparent that such loss could not be neglected in the microdetermination, as it is 10 per cent when 0.1 mg. of nicotine is precipitated from a solution containing 10 ml. of 0.05 *N* hydrochloric acid. For greatest accuracy it is necessary to know both the volume and the acid concentration of the solution from which the nicotine is precipitated and to apply the appropriate correction.

The effect of dilute hydrochloric acid on the solubility of nicotine silicotungstate has been reported elsewhere (*7*). For convenient reference the results are given in Figure 1. Although the solubility of the salt is at a minimum in 0.005 *N* hydrochloric acid, it is desirable to carry out the precipitation in 0.03 to 0.1 *N* acid, since crystal formation appears to be favored in more concentrated acid. For washing the precipitate 0.005 *N* acid can be used; this is slightly lower than the concentration adopted by the A. O. A. C.

The temperature of ignition is important, particularly with small quantities of nicotine silicotungstate, since nicotine is calculated from the weight of the residue, which is regarded as $SiO_2 \cdot 12WO_3$. Three factors are to be considered in the ignition: the complete burning off of the combined nicotine, the dehydration of silicic acid, and the prevention of volatilization of tungstic oxide. Hillebrand and Lundell (*4*) state:

> If both [Si and W] are to be determined in mixed oxides the analyst must therefore choose between getting high results for silica or low results for tungsten. Ordinarily the first choice is taken and causes less trouble, for when the two occur together the percentage of silicon is usually relatively small.

These authors recommend that the ignition be carried out below 850° C. in these cases. The present writer's experiments are in agreement with these conclusions, and in the case of nicotine silicotungstate one molecule of water represents only 0.63 per cent of the total weight of the residue. Pizer (*6*) recently reported 1000° C. as the desirable temperature of ignition of nicotine silicotungstate, but he used considerably larger quantities of nicotine silicotungstate, and 5 mg. was the smallest quantity of nicotine determined. In this work ignition has been carried out in an electric muffle at 650° C. for 30 minutes. Full dehydration of the silica does not occur, but burning of nicotine is complete and loss of tungstic oxide is prevented.

The foregoing conclusions are supported by the following experiment, which demonstrates that the residue can be cooled in air without taking up prohibitive amounts of water, and also by the results given in Table II: Approximately 0.2-gram samples of pure nicotine silicotungstate (*7*) were ignited at 650° C. in platinum crucibles for 0.5 hour. The tare platinum crucibles were treated in exactly the same way. The samples and tares were cooled in a desiccator over phosphorus pentoxide. The crucibles were weighed as soon as possible after removal from the desiccator and at intervals thereafter.

The results are given in Table I. It is evident that the weight becomes constant within 10 minutes. The increase during the first 10 minutes may be attributed to the film of water that condenses on any dry surface when exposed to air. The residue is slightly heavier than calculated for nicotine silicotungstate on the basis of the formula $SiO_2 \cdot 12WO_3 \cdot 2H_2O \cdot 2C_{10}H_{14}N_2 \cdot 5H_2O$. This is accounted for in part by incomplete dehydration of silica, although Bertrand and Javillier (*1*) state that the water of

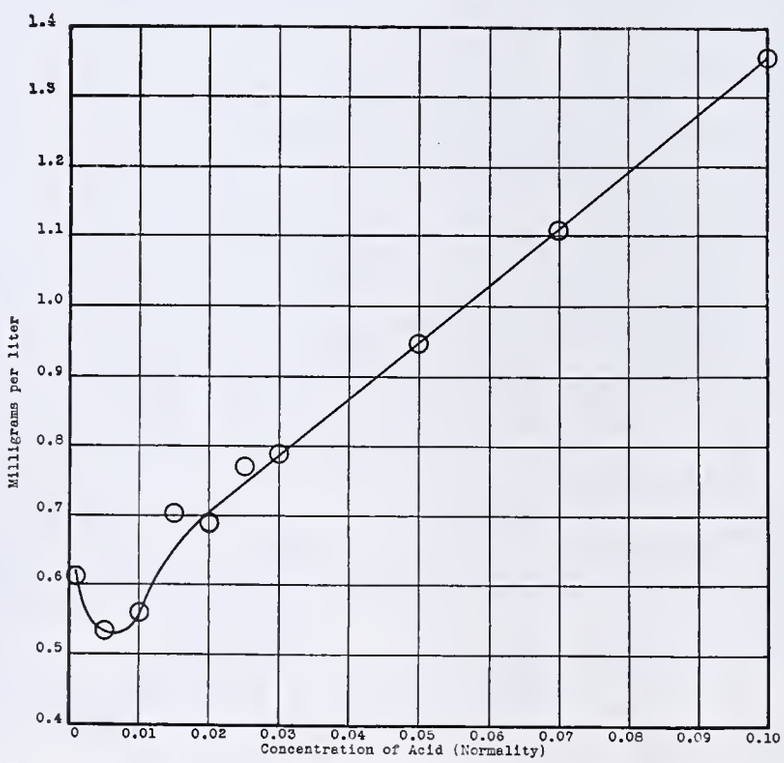

FIGURE 1. NICOTINE RETAINED IN SOLUTION AS SILICOTUNGSTATE IN VARIOUS CONCENTRATIONS OF HYDROCHLORIC ACID

crystallization is not definitely five molecules but may vary with the humidity.

Table I. Effect of Time of Exposure on Absorption of Water from Air by Residue Obtained When Nicotine Silicotungstate Was Ignited for 30 Minutes at 650° C.

Exposure to Air	Residue Found on Ignition of Samples of Nicotine Silicotungstate Sample 1	Sample 2
Minutes	*Gram*	*Gram*
2	0.16308	0.17270
5	0.16319	0.17279
10	0.16326	0.17286
30	0.16327	0.17283
60	0.16323	0.17286
120	0.16325	0.17282
180	0.16324	0.17286
120[a]	...	0.17281
Calcd.[b]	0.16253	0.17209
Weight of original sample	0.18827	0.19934

[a] After second ignition at 650° C. for 2 hours.
[b] Calculated as $SiO_2 \cdot 12WO_3 \cdot 2H_2O \cdot 2C_{10}H_{14}N_2 \cdot 5H_2O$ to $SiO_2 \cdot 12WO_3$.

Table II shows the results of two series of determinations of solutions containing from 0.5 to 0.1 mg. of nicotine in 10 ml. of 0.05 *N* hydrochloric acid. In one series the nicotine silicotungstate was ignited over a flame and in the other an electric muffle at 650° C. was used.

Table II. Analyses of Standard Nicotine Solutions

Method of Ignition	No. of Determinations	Average Nicotine Found[a] Uncorrected	Corrected[b]	Calcd. Nicotine	Average Error Uncorrected	Corrected[b]
		Mg.	*Mg.*	*Mg.*	%	%
Over flame at moderate red heat for 10 minutes	8	0.089 ± 0.002	0.099 ± 0.002	0.101	−12.0	−2.0
	9	0.189 ± 0.002	0.199 ± 0.002	0.202	− 6.4	−1.5
	9	0.289 ± 0.002	0.299 ± 0.002	0.302	− 4.3	−1.0
	12	0.489 ± 0.004	0.499 ± 0.004	0.504	− 3.0	−1.0
At 650° C. for 30 minutes	12	0.089 ± 0.002	0.099 ± 0.002	0.099	−10.0	0.0
	8	0.188 ± 0.002	0.198 ± 0.002	0.198	− 5.0	0.0

[a] Residue × 0.114.
[b] Corrected for loss of nicotine due to solubility of the silicotungstate at the rate of 0.001 mg. per ml. of 0.05 *N* hydrochloric acid.

Since the crucibles are weighed on different days, it is essential to use tares of the same density to compensate for variations in pressure, temperature, and humidity. The use of the usual glass lead-shot tares for porcelain crucibles was found to introduce an appreciable error due to these causes. The writer has used broken chips of porcelain to make the final adjustment of tares. Ordinary porcelain crucibles can be used as tares for the filterstick-crucible combination.

Experimental

Reagents. A 12 per cent solution of silicotungstic acid ($4H_2O \cdot SiO_2 \cdot 12WO_3 \cdot 22H_2O$), standard solution of hydrochloric acid for dilution to obtain proper acid concentration (this will vary with the experimental conditions), and solution of 0.005 *N* hydrochloric acid for washing the precipitate.

Apparatus. Microchemical balance (in this work a Kuhlmann balance, the rider of which was checked against a Bureau of Standards calibrated 10-mg. weight, was used). Porcelain crucibles with darkened interior and filterstick similar to those used in the sulfur microdetermination (*3*). The burets and volumetric flasks were calibrated to an accuracy consistent with the use to which they were put. To obtain the results given in Table II, standard solutions containing weighed amounts of pure nicotine in 0.1 *N* hydrochloric acid were used. The nicotine (n_D^{23} = 1.5241) was purified by repeated crystallization of the zinc chloride addition product and subsequent distillation *in vacuo*, according to the method of Lowry and Lloyd (*5*).

In weighing the samples of nicotine, precautions were taken to prevent absorption of moisture.

General Procedure. New crucibles and filtersticks should be boiled with dilute nitric acid and washed with distilled water before being used. The crucibles and filtersticks are then ignited to constant weight and the filtersticks removed and placed upright in a covered holder (*3*). In a crucible is placed an accurately measured aliquot containing the nicotine hydrochloride in 0.1 *N* hydrochloric acid, and the required amount of 0.05 *N* hydrochloric acid and water is then added to give a total volume of 10 ml. of 0.05 *N* acid. The solution is stirred with a short 2-mm. glass stirring rod while 0.1 ml. of the silicotungstic acid solution is being added (0.2 ml. of silicotungstic acid was used in precipitating 0.5 mg. of nicotine). The stirring rod is then removed and washed with a few drops of 0.005 *N* acid. The stirring rod should be cleaned with warm chromic acid each day before use, as otherwise particles tend to adhere to it. The crucibles are then covered and allowed to stand until the next day to ensure crystallization of the originally amorphous salt.

The liquid is filtered from the precipitate by means of the filterstick, and the walls of the crucible and filterstick are washed three times with approximately 1 to 2 ml. of cold 0.005 *N* hydrochloric acid. Before ignition the crucibles and filterstick are dried at 95° to 100° C. to remove excess water, which might cause spattering on ignition. For ignition the crucibles are placed within larger porcelain crucibles in an electric muffle at 650° C. for 30 minutes. Upon removal from the furnace the crucibles are cooled for 2 hours in a desiccator (no drying agent) and are then allowed to stand for 1 hour on a metal block within the outer balance case before weighing. The crucibles are weighed 5 minutes after they have been placed on the balance pan and the door has been closed. After weighing, the crucibles are ready for another run. It is unnecessary to remove the residue from the previous run, but great care must be taken to knock off all loosely adhering particles from the filterstick against the crucible wall before the filterstick is removed. In all operations the crucibles are never touched with the hands, platinum-tipped forceps being used. During filtration the crucible is placed on a watch glass which can be rotated to facilitate washing.

For general use it is convenient to scratch a mark on the inner wall of the crucible to indicate a volume of 10 ml. Precipitations have been made in concentrations up to 0.1 *N*, the appropriate correction being applied.

Summary

A micromethod for the determination of nicotine based on the precipitation of the silicotungstate is described. On the basis of eight to twelve runs each, solutions containing 0.1 to 0.5 mg. of nicotine were analyzed with an average accuracy of ±0.002 mg. It is necessary to correct the results for loss of nicotine due to the solubility of nicotine silicotungstate. The correction depends on the volume and acid concentration of the solution from which precipitation is made. The temperature of the ignition of the silicotungstate must be controlled; 650° C. has been found suitable for the micromethod. A concentration of 0.005 *N* hydrochloric acid is recommended for washing the precipitated nicotine silicotungstate, since its solubility is at a minimum at this concentration.

Acknowledgment

The author desires to thank Nathan L. Drake for his continued interest in this work.

Literature Cited

(1) Bertrand, G., and Javillier, M., *Ann. chim. anal. app.*, **14**, 165 (1909).
(2) Chapin, R. M., U. S. Dept. Agr., Bur. Animal Ind., *Bull.* 133 (1911).
(3) Emich, F. (translated by F. Schneider), Microchemical Laboratory Manual," p. 70, New York, John Wiley & Sons, 1932.
(4) Hillebrand, W. F., and Lundell, G. E. F., "Applied Inorganic Analysis," p. 538, New York, John Wiley & Sons, 1929.
(5) Lowry, T. M., and Lloyd, W. V., *J. Chem. Soc.* [London], **1929**, 1376.
(6) Pizer, N. H., *J. Soc. Chem. Ind.*, **53**, 356T (1934).
(7) Spies, J. R., *J. Am. Chem. Soc.*, **58**, 2386–8 (1936).

Received September 5, 1936

An Improved Semi-Micro and Micro-Carius Determination

R. H. KIMBALL, H. H. WITTENBURG, AND D. E. MACFADYEN
University of New Hampshire, Durham, N. H.

THE familiar method originated by L. Carius three-quarters of a century ago and still commonly employed for the elementary analysis of halogen in organic compounds suffers from several well-known disadvantages. A comparatively large sample is needed, proper sealing of the large bomb tube is difficult, and the apparatus is subject to explosion and inherently dangerous to handle because of the high pressures generated. On cracking off the end of the tube, glass chips often fall into the precipitate. Transfer and rinsing of the halide from the bomb tube and small specimen tube are inconvenient, and a second transfer to the Gooch crucible involves a further chance of loss.

Some of these difficulties have been mitigated by improvements which have been suggested from time to time. Adaptation to the micro scale is described by Pregl (*4*), the sample being weighed in small glass capillaries open at both ends. After cracking off the end of the bomb tube as usual, the contents are rinsed into a dish or the capillary is lifted out by means of a bent platinum wire, rinsed, and the halide siphoned directly from the bomb tube onto a micro filter tube. To obtain the same advantage of direct transfer of precipitate, H. Roth (*5*) introduces the unprotected sample by means of a long-stemmed funnel when dealing with substances unaffected by cold nitric acid. A semi-micromethod has been recently described by Clark (*1*), employing samples of approximately 25 mg. weighed to 0.02 mg. on a special semi-microbalance. After rinsing out the halide into a small beaker it is siphoned onto the filter tube. He has designed a small electric bomb furnace now on the market (The American Instrument Co., Inc., 774 Girard St., N. W., Washington, D. C.).

The procedure described below was developed 4 years ago, and sufficient results have now accumulated to show that the method is simple and reliable even in the hands of undergraduates. The weighings are done on an ordinary good analytical balance, adjusting the sensitivity and calibrating the weights to obtain an accuracy of 0.05 mg. Samples usually run from 25 to 35 mg., but have been varied from 20 to 100 mg. without change in the accuracy of the results.

The samples are weighed in small capsules of pure silver foil (fine silver foil, dead soft, about 0.0006 inch thick, obtainable inexpensively from the Peerless Roll Leaf Co., Inc., 911–17 New York Ave., Union City, N. J.) which effectively protects the substance from the nitric acid while the tube is being sealed, but dissolves on heating and supplies the necessary silver nitrate. No sample tube remains for removal, and the halide is siphoned directly from the bomb tube into the micro filter tube.

To obviate any chance of glass splinters contaminating the precipitate, the top is melted from the bomb tube in a flame. The procedure used here is somewhat similar to that recently described by Unterzaucher (*5*), but seems more reliable and convenient.

Procedure

SEMI-MICRO SCALE. A capsule is made by winding a strip of silver foil about 2 × 3 cm. around a 4-mm. glass rod, folding in the edges several times to make a tight seam, and pressing the end down firmly to form a cup. This is weighed to 0.05 mg. and contains about 90 mg. of silver. A 25- to 35-mg. sample is placed in the cup, which is closed by pressing the sides together and folding down the top edge, and finally is rolled into a tight coil and weighed again.

The bomb tube is made by sealing and rounding one end of a piece of ordinary Pyrex tubing 30 cm. long by 15 mm. outside diameter, not too thin-walled. After cleaning with acid and drying, 2 cc. of concentrated nitric acid (sp. gr. 1.42) free from halogen are introduced through a long-stemmed funnel. The capsule containing the sample is dropped in and the tube sealed in the oxygen flame, the action of the acid on the silver at room temperature being so slow that the sample is completely protected. Instead of the usual long capillary seal, it is easier to let the tube taper gradually to a point over 3 to 5 cm., and this facilitates rinsing down the walls after opening.

The heating can be carried out in any bomb furnace, making sure that the tube is inclined at a sufficient angle to keep the materials in the bottom. Here an ordinary electric bomb furnace is employed. The tube is wrapped in a sheet of paper and a wire looped around for convenience in drawing it from the iron jacket. The temperature rises gradually to 250° C. over about 3 hours and is held at that point for approximately the same time, and the tube is then allowed to cool in the furnace, conveniently overnight.

By means of the wire, the end of the tube is drawn slightly out of the iron sleeve and the tip of the seal is heated in an ordinary Bunsen flame till the very moderate pressure blows out an opening. The tube is then removed from the sleeve and the opening fire-polished. After cooling, a stream of water is directed into the tube to wash down any particles of halide, though as a matter of fact none are ever observed near the seal if the tube has

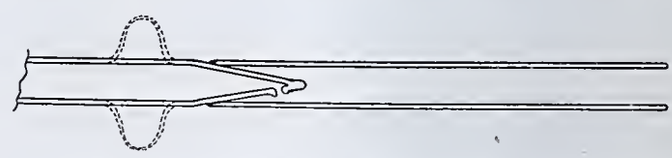

FIGURE 1. FLAME OPENING OF BOMB TUBE

been kept inclined. A piece of glass tubing about the same diameter as the bomb tube is inserted over the tapered end and sealed on roughly (Figure 1). The bomb tube is then heated at the shoulder and blown out into a thin-walled bulb; this can be blown in stages and may be very irregular. A hole is blown while the flame is playing on the thin side of the bulb and the flame then quickly worked around the bulb, drawing the glass apart. In this way the end of the tube can be quickly and easily cut off without danger of glass chips, leaving a flared edge around the opening.

Enough water is added to fill the bomb tube about one-third full and the contents are mixed by careful shaking. The halide can be filtered at once, but it is better practice to stand the tube for an hour in a beaker of hot water to coagulate the precipitate. After cooling, the halide is drawn directly from the bomb tube into a micro filter tube by the siphon method of Pregl (*4*). Any lumps should be broken up with the end of the siphon tube. The precipitate is rinsed several times with nitric acid (1 to 100) and then allowed to draw over through the siphon. The walls are rinsed several times alternately with dilute nitric acid and with 95 per cent alcohol until all the halide has been transferred to the filter. On completing the filtration, the siphon is removed from the filter tube, and that portion projecting into the tube is rinsed with water into the filter tube. The halide is finally washed with four half-filter-tube portions of distilled water.

The filter tube is then wiped with a damp cloth, placed in a wire holder for convenience in weighing, and slid into an ordinary glass adapter open at both ends. (The stems of the filter tubes were cut to 4 cm. to facilitate drying.) It is heated in the oven at 125° C. for an hour and allowed to cool for a half hour in the balance room. After removal from the adapter it is weighed to 0.05 mg. in the wire holder, which prevents rolling on the balance pan. By keeping the tube in the stoppered adapter, the final weight of one analysis can be used as the initial weight of the next. The bomb tube can be used for two more analyses before becoming inconveniently short.

MICRO SCALE. A series of analyses was made using samples of 6 to 10 mg., weighed in a slightly smaller silver capsule on the

microbalance. After rolling between the fingers, the capsule is left on the balance pan for 10 minutes to reach constant weight. The bomb tubes are constructed of 10-mm. tubing and the amount of nitric acid is reduced to 1 cc. They are charged, heated, and opened, and the precipitate is transferred to the filter as before. Before the first weighing of any day the filter tube is wiped with a damp cloth, placed in the adapter, and heated in the oven at 125° C. The adapter is closed with cork stoppers and allowed to cool, and the filter tube wiped again with the damp cloth and left for a half hour on the pan of the microbalance before weighing. After filtration the identical procedure is followed, and this weight can be used as the first weight of any succeeding analysis on the same day. Obviously the drying block technic of Pregl could be employed if desired.

The accuracy seems to be of the same order as the semi-micro-determinations. Slightly more time is required, so that economy of material is the only advantage of the micromethod.

Table I. Results by Semi-Micromethod

Sample	Halide	Calcd.	Found	Difference
Mg.	*Mg.*	%	%	%
p-Bromoacetanilide, $BrC_6H_4NHCOCH_3$				
22.30	19.80	37.34	37.79	+0.45
23.25	20.30		37.17	−0.17
48.50	42.30		37.12	−0.22
46.20	40.25		37.08	−0.26
26.55	23.30		37.36	+0.02
58.25	50.65		37.01	−0.33
23.70	20.80		37.36	+0.02
p-Chloroacetanilide, $ClC_6H_4NHCOCH_3$				
39.45	33.20	20.92	20.82	−0.10
58.25	49.10		20.85	−0.07
26.45	22.40		20.95	+0.03
43.10	36.00		20.66	−0.26
p-Nitrochlorobenzene, $ClC_6H_4NO_2$				
41.75	37.90	22.51	22.46	−0.05
29.85	27.00		22.38	−0.13
101.20	92.20		22.54	+0.03
61.05	54.75		22.18	−0.33
45.75	41.95		22.68	+0.17
20.75	19.15		22.82	+0.31
N-(γ-bromopropyl) phthalimide, $C_8H_4O_2N\text{-}CH_2\text{-}CH_2\text{-}CH_2Br$				
31.45	22.00	29.82	29.77	−0.05
35.05	24.50		29.75	−0.07
37.15	25.95		29.73	−0.09
21.85	15.30		29.80	−0.02
63.00	44.05		29.76	−0.06
82.30	57.50		29.74	−0.08
Methyl-α-phenyl-β-bromo-β-benzoyl propionate (*2*), $C_{17}H_{15}O_3Br$				
37.25	19.90	23.03	22.74	−0.29
21.55	11.70		23.11	+0.08
19.65	10.60		22.96	−0.07
21.55	11.60		22.92	−0.11
Methyl-α,γ-diphenyl-α,β-dihydroxy-γ-chlorobutyrate (*3*), $C_{17}H_{17}O_4Cl$				
12.75	5.70	11.06	11.06	0
22.15	9.95		11.11	+0.05
20.80	9.25		11.00	−0.06

Table II. Results by Micromethod

Sample	Halide	Calcd.	Found	Difference
Mg.	*Mg.*	%	%	%
p-Bromoacetanilide				
11.660	10.280	37.34	37.52	+0.18
10.710	9.395		37.34	0
10.666	9.370		37.39	+0.05
12.807	11.240		37.36	+0.02
p-Chloroacetanilide				
11.161	9.430	20.92	20.91	−0.01
7.156	6.095		21.07	+0.15
6.226	5.315		21.11	+0.19

Analytical Results

The data given in Tables I and II, obtained by undergraduate students, indicate that the degree of accuracy is about that normally expected. It is worthy of note that the use of a larger sample brings no corresponding increase in accuracy, showing that the errors in weighing are well within those inherent in the method itself. Of the few failures encountered, only two were not traced to faulty manipulation.

Summary

A simplified Carius method is described for the semi-micro- and microdetermination of chlorine and bromine in organic compounds. The sample is weighed on an ordinary analytical balance in a capsule of silver foil which dissolves and allows the halide to be siphoned directly from the bomb tube onto a micro filter tube. The bomb tube is opened with a flame which eliminates the danger of glass chips falling into the precipitate. The method is reliable and convenient and the results are of the usual order of accuracy.

Literature Cited

(1) Clark, *J. Assoc. Official Agr. Chem.*, **17**, 483 (1934).
(2) Kohler and Goodwin, *J. Am. Chem. Soc.*, **49**, 226 (1927); Kohler and Kimball, *Ibid.*, **56**, 730 (1934).
(3) *Ibid.*, **55**, 4637 (1933).
(4) Pregl, "Quantitative Organic Microanalysis," 2nd English ed., tr. by Fyleman, p. 149, Philadelphia, P. Blakiston's Son & Co., 1930.
(5) *Ibid.*, 4th German ed., p. 129, Berlin, Julius Springer, 1935.

Received August 20, 1936.

Preparation of Vehicle Films Free of Supporting Foundation

E. H. BAYOR and L. KAMPF
Division of Analyzing and Testing, Borough of Queens, Long Island City, N. Y.

IN THE analysis of paints, etc., useful information concerning their physical characteristics can be obtained by examination of a film of the vehicle. The following is a method of preparing such films: The vehicle must first be separated from the pigment by settling, centrifuging, or filtering with or without the aid of solvents or solvent mixtures. If a solvent is used, the solvent must subsequently evaporate so as not to change the nature of the vehicle. The separated vehicle is poured on a thin aluminum sheet and allowed to harden, and the aluminum is dissolved with dilute (1 to 10) hydrochloric acid to which a drop of platinum chloride solution has been added. The film is then washed and dried.

To avoid wrinkling of the film during preparation or afterwards, the authors found it practical to dip the four edges of the film in molten paraffin, after it dried on the aluminum sheet. This protects the aluminum underneath from the action of the acid bath and leaves a metal frame around the film.

Received November 3, 1936.

A Simplified Micro-Kjeldahl Apparatus

JOSEPH E. SCOTT AND EDWARD S. WEST
University of Oregon Medical School, Portland, Ore.

THE apparatus for the micro-Kjeldahl determination of nitrogen devised by Parnas and Wagner (*4*) is complicated and fragile as well as cumbersome to set up and manipulate. Recently Kirk (*3*) and Fife (*1*) have described different types of apparatus for the same purpose, which seem to represent improvements over that of Parnas and Wagner. For some time the writers have used an apparatus which may be of interest because of its relative simplicity, compactness, strength, and accuracy. Figure 1 shows the details of construction.

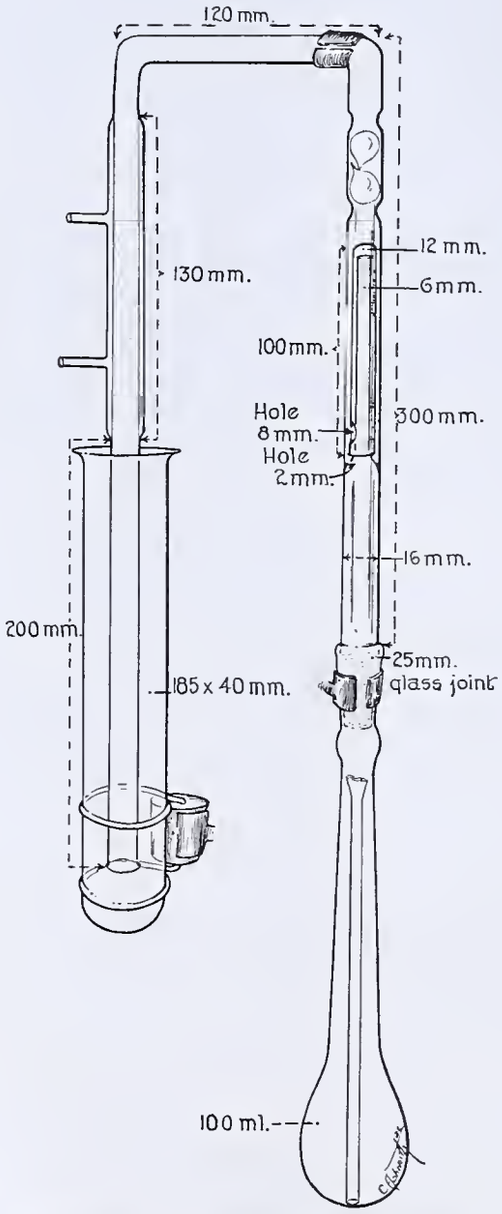

FIGURE 1. DIAGRAM OF APPARATUS

It consists of a 100-ml. digestion and distillation flask (a 100-ml. Kjeldahl flask) attached by a ground-glass joint to a distilling head composed of a West distilling trap (*6*) and a West condenser (*5*). The only part of the construction which may give trouble to the amateur glass blower is making the trap. As can be seen from the diagram, the trap consists essentially of a small sealed-in tube (about 6 mm.) with open end over which a small test tube, with a hole near the bottom, is inverted. There is a small water-return hole (about 2 mm.) in the bottom of the 6-mm. tube. The rim of the inverted test tube should have a few indentations in it (not shown) to facilitate return of water to the distilling flask. As can be seen, the vapor makes two 180° turns in passing through the trap. Two Pyrex bulbs are placed above the inverted tube to hold it in place and also to serve as additional baffles. The water condenser may be omitted if desired, though the writers have experienced less trouble with sucking back when the condenser is used. The distillation may also be carried out more rapidly with the condenser.

The sample to be analyzed is digested in the distilling flask according to the procedure of Harte (*2*).

After cooling, 25 ml. of water are added and the alkali tube is placed in the flask. The contents of the flask are further cooled if necessary and then 15 ml. of 65 per cent sodium hydroxide are carefully added from a pipet through the tube, forming a layer under the acid solution. The glass joint is moistened with water and the distilling head firmly set in place with the tip from the condenser just under the standard acid (10 ml. of 0.0143 *N* hydrochloric and 10 cc. of water) in the receiving tube. A vessel of cold water is placed around the distilling flask, which is then gradually shaken to mix the alkali and acid. The clamps (rubber-covered) holding the apparatus should be well tightened to hold the glass joint in place. The condensing water is turned on slowly and the flask is heated with a microburner. The alkali tube remaining in the flask serves as a boiling tube. A small U-shaped boiling tube may also be advantageously used, in addition.

Distillation is continued until solid sodium sulfate crystallizes out and the volume in the distilling flask has been reduced to about one-half. During the distillation the receiving tube should be moved down at intervals, so that the condenser tip never extends much below the surface of the acid. The last part of the distillation is carried out with the condenser tip just above the receiving acid. There is generally some bumping as the sodium sulfate separates, but with care this causes no trouble. After the distillation is complete, the tip of the condenser is washed down with a few milliliters of water and the excess acid in the receiving tube is titrated with 0.0143 *N* sodium hydroxide, using four drops of Tashiro's indicator (2 ml. of 1.0 per cent aqueous methylene blue mixed with 100 ml. of 0.04 per cent methyl red in 50 per cent alcohol). Blank determinations on the reagents gave about 0.07 ml. titration, correction for which was made in the calculations.

The titration is most efficiently carried out with the aid of a mechanical stirrer and buret which have been previously described (*7*). The stirring can be satisfactorily done, however, with a loop stirrer having a right-angle bend to serve as a handle.

TABLE I. ANALYSIS OF NITROGEN-CONTAINING SOLUTIONS

Substance	Nitrogen Present	Nitrogen Found	Error
	Mg.	*Mg.*	%
$(NH_4)_2SO_4$	0.997	0.987	−1.0
		0.993	−0.4
		0.993	−0.4
		0.991	−0.6
Urea	0.991	0.992	+0.1
		0.985	−0.6
		0.989	−0.2
Tyrosine	0.595	0.599	+0.7
		0.595	0.0
		0.591	−0.7
Creatinine	0.955	0.948	−0.7
	0.961	0.957	−0.4

Table I gives a series of unselected results obtained on ammonium sulfate, urea, tyrosine, and creatinine.

Literature Cited

(1) Fife, IND. ENG. CHEM., Anal. Ed., 8, 316 (1936).
(2) Harte, *Ibid.*, 7, 432 (1935).
(3) Kirk, *Ibid.*, 8, 223 (1936).
(4) Parnas and Wagner, *Biochem. Z.*, **125**, 253 (1921).
(5) West, IND. ENG. CHEM., Anal. Ed., **2**, 199 (1930).
(6) *Ibid.*, 4, 445 (1932).
(7) *Ibid.*, 8, 62 (1936).

RECEIVED August 19, 1936.

ANALYTICAL EDITION

INDUSTRIAL and ENGINEERING CHEMISTRY

Harrison E. Howe, Editor

The Role of Spectrophotometry in Colorimetry

M. G. MELLON, Purdue University, Lafayette, Ind.

OUTSIDE of the white polar regions, the black night, and the gray desert wastes, color plays a more important esthetic and practical part in our daily lives than is generally realized. The conference on color at the Massachusetts Institute of Technology in July, 1936, demonstrated the present physical and chemical interest in the subject. At this symposium more than 25 papers, mostly by industrial men, were presented on various subjects relating to the measurement of color and the use of colorimetric data in formulating useful specifications.

In the work of the analytical chemist colorimetric phenomena have at least the following important applications (*33*): (a) the marking of the course of various chemical reactions incident to the determination of constituents; (b) the qualitative detection of various constituents by means of specific colorimetric reactions; (c) the quantitative determination of constituents by appropriate means; and (d) the actual "color analysis" of an object. The present paper is concerned with both qualitative and quantitative aspects, in so far as the spectrophotometer may be utilized in evaluating the color analytically.

The word colorimetry implies measurement of color. In chemistry the practice of colorimetry involves almost entirely a comparison of an unknown system with a known system to determine whether they have the same intensity of color. The process of comparison is carried out in a number of different ways. One method is to use what the chemist calls a colorimeter. As Hardy and Perrin have pointed out (*22*), such instruments should really be called color comparators, since there is no measurement of color in the sense that physicists use the term colorimetry.

In physics colorimeters are instruments in which stimuli are combined in such a manner that the resultant color sensation is the same as that of the object being measured. This result may be achieved in several ways by a number of different instruments which serve to synthesize stimuli. In general, such apparatus is of the trichromatic or monochromatic type. In the former the color to be measured is matched by a mixture of the three primaries, red, green, and violet, produced in some suitable manner. In the latter the color under test is matched by a mixture of white light with monochromatic light produced by a dispersing system. Such colorimeters have not found extensive use in chemistry. The chief difficulties are to maintain the desired quality of the light source and to obtain observers having normal vision.

Although spectrophotometers have been known for many years, it is only in the last decade or two that their value has begun to be generally appreciated in chemical work (*50*), and there are still few laboratories equipped with such instruments. With increased production, decreased prices should result in a more widespread distribution of spectrophotometric equipment.

Principle of Spectrophotometry

Essentially, a spectrophotometer is a device for determining, wave length by wave length, the proportion of radiant energy incident upon a body that is reflected or transmitted by it. In order to measure the transmission of a colored solution, for example, the arrangement of a number of instruments is

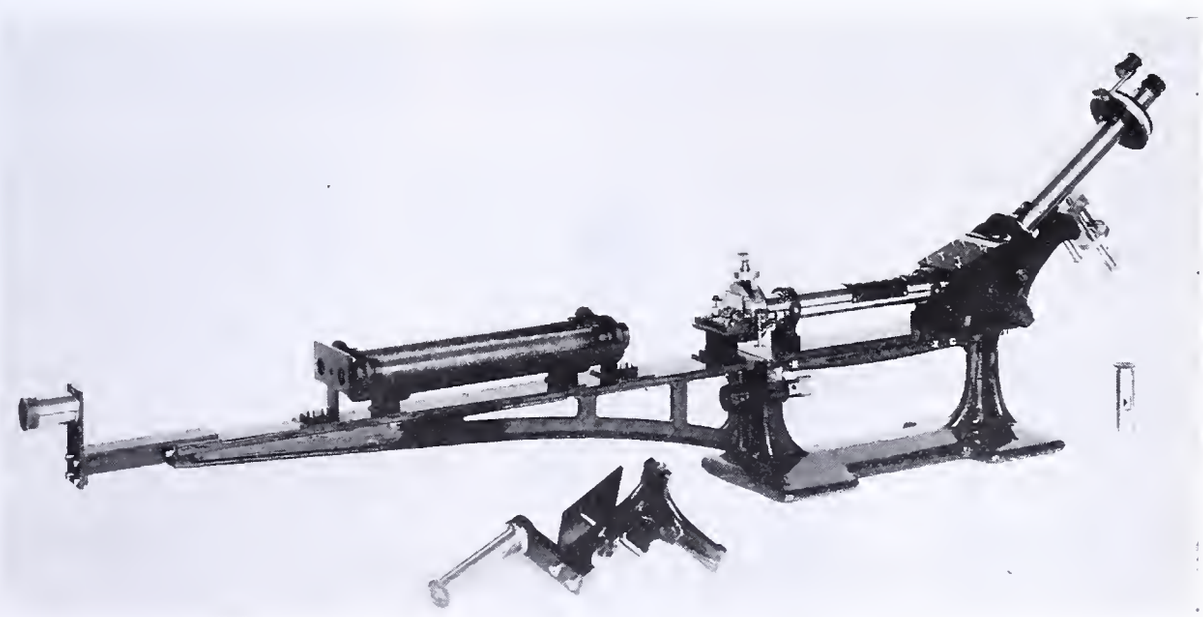

FIGURE 1. KÖNIG-MARTENS SPECTROPHOTOMETER FITTED WITH LONG TRANSMISSION CELLS

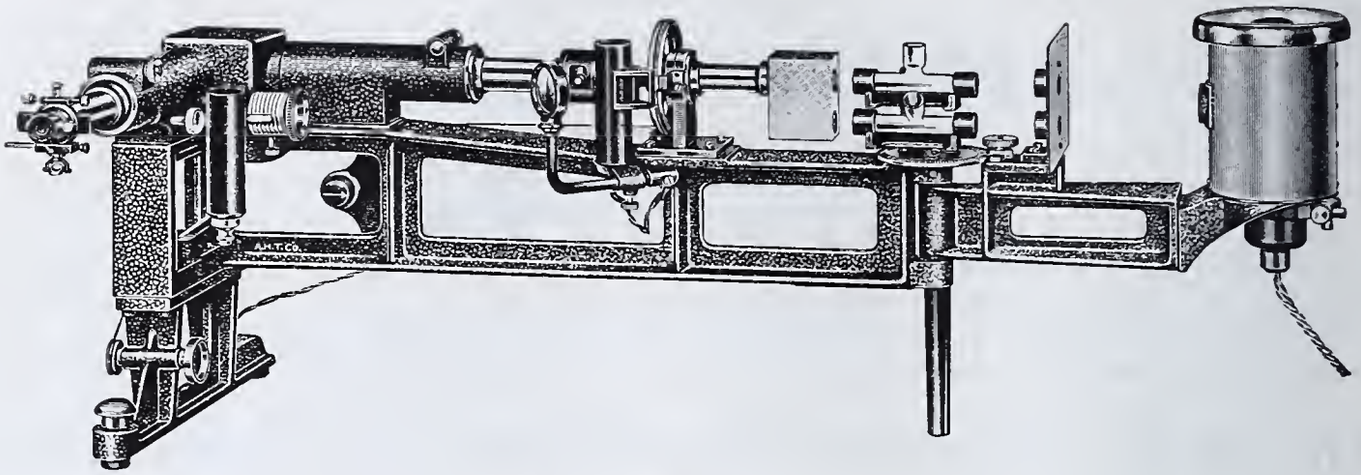

FIGURE 2. HILGER SPECTROPHOTOMETER

such that the light from a suitable source is divided into two beams of equal intensity. As these pass through a monochromator, a narrow spectral band of the width and wave length desired may be selected. The solution, in a suitable cell, is placed in one of the two beams; and the solvent only, in an identical cell, is placed in the other beam. Since the solution will absorb more light than the solvent, the emergent beams are of unequal intensity. By means of a photometer in the light path the more intense beam may be reduced to match the other, as determined by bringing the two halves of an optical field to equal intensity. The graduation of the instrument enables one to determine the proportion of the light incident on the solution that is transmitted by it. This value is known as the per cent transmittancy (*43*). By placing the sample in a different position, reflection values can be obtained for such materials as paper, textiles, and paint panels.

Spectrophotometric Apparatus

In contrast to the chemist's "colorimetric" determinations, spectrophotometric measurements are not limited to colored systems. For many years absorption spectra have been determined, chiefly by photographic means, for the ultraviolet and infrared regions of the spectrum. The present discussion is limited to instruments used for the visual region, which are the most useful for measuring colored systems, both opaque and transparent. A general review of such apparatus was presented some years ago by a committee on spectrophotometry of the Optical Society of America (*18*), and more recently Gibson has discussed the subject (*17*).

For work in the visual region the type of instrument largely used consists of a light source, a monochromator, a photometer, an eyepiece for observing the photometric field, and a holder for the sample. The holder is a cell for transmission measurements of a liquid, or a device for supporting an opaque object on which reflection measurements are to be made. Such instruments are illustrated in Figures 1 to 3. Figure 1 shows the König-Martens type, manufactured by Schmidt and Haensch, which is the visual instrument used by the U. S. Bureau of Standards. Another foreign instrument is illustrated by the Hilger form shown in Figure 2, arranged for transmission measurements. It has a unique construction for making reflection measurements on opaque samples. Figure 3 illustrates one of the best known instruments made in this country, as manufactured by Bausch and Lomb for measuring in the same cell different thicknesses of a liquid. All the better instruments have variable, calibrated slits for controlling the width of the spectral band of light admitted. Various details of operation and a thorough discussion of sources of error for the König-Martens instrument are contained in a publication by McNicholas (*28*).

During the last 15 years many efforts have been made to substitute a photoelectric cell for the human eye as the "seeing" mechanism of such instruments. The eye has two definite disadvantages in being easily fatigued, and in having a very low sensitivity at 400 and 700 mμ, where the normal visibility curve is practically zero. Early difficulties with cells have been overcome until certain instruments equipped with this device are now very satisfactory. Zscheile, Hogness, and Young have assembled an apparatus (*52*) which gives very precise results although it is somewhat tedious to use. Less sensitive instruments of this general type are available commercially. Razek and Mulder (*38*) devised an instrument (manufactured by the Thwing-Albert Instrument Co. of Philadelphia) that provides a spectrophotometric curve, 8.75 × 11.25 cm. (3.5 × 4.5 inches), for the sample as soon as the photographic film is developed. Figure 4 illustrates the instrument. A third type of photoelectric instrument is that devised by Hardy (*20*) and manufactured by the General Electric Company (*33A*). Figure 5 illustrates a late model.

A modified General Electric instrument is used in the author's laboratory for all transmission and reflection measurements. Any ordinarily smooth curve is plotted automatically in 3 to 5 minutes on 20 × 27.5 cm. (8.5 × 11 inch) paper.

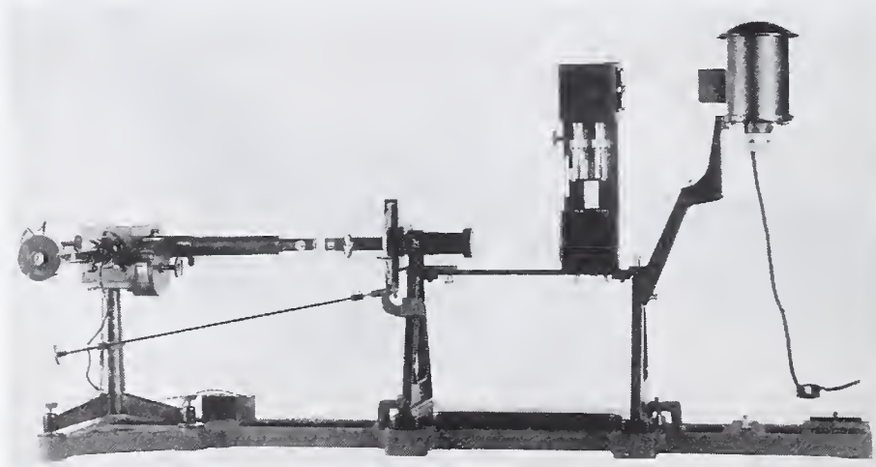

FIGURE 3. BAUSCH AND LOMB SPECTROPHOTOMETER FITTED WITH TRANSMISSION CELLS FOR VARIABLE DEPTH

The Nature of Spectrophotometric Data

The fundamental data provided by a spectrophotometer show the proportion of the light incident upon a sample which is reflected or transmitted by it. There may be a single value for a given wave length, or values may be determined to cover the whole visible range. In the latter case the results are generally plotted in the form of a curve with transmission or reflection as ordinates and wave length as abscissas.

When a curve is to be made covering part or all of the visible range, the question arises as to the wave-length interval at which to determine the individual points, and the width of spectral band to use for the light source. If the curve is steep and contains small sharp absorption bands, the points may need to be taken at every millimicron with a spectral band as narrow as possible. Zscheile found such precautions necessary in determining chlorophyll (*51*). If the curve is smooth and not steep, points at each 10 mμ are adequate, and spectral bands of 3 to 10 mμ are sufficiently narrow. Recording instruments provide a continuous curve.

If instruments are graduated to read directly, the values will be in one of several possible terms, such as percentage, optical density, or extinction coefficient. The percentage system is probably the most commonly used at present, although the others have merit in special cases. Benford has discussed the plotting of spectrophotometric data (*5*), and Twyman and Allsopp include definitions of terms (*45*). In instruments such as Zscheile's, operating on a substitution basis, the ratio of two deflections of a galvanometer or electrometer must be calculated for each wave-length setting. For many purposes curves of the percentage–wave-length type are sufficient in themselves. Figures 6 and 7 show such curves for several different systems.

For certain purposes it is desirable or necessary to convert the data of the percentage–wave-length curve to the trichromatic or monochromatic basis, thus providing a real analytical measurement of the color. In this sense the spectrophotometer becomes a colorimeter, yielding values on the subtractive or additive system. The trichromatic, or tristimulus, values are in terms of the percentages of the three primaries, red, green, and violet, required to match the object. The monochromatic values are in terms of dominant wave length and of percentages of brightness and purity. Reference is made in the section on color analysis to the method of making such calculations.

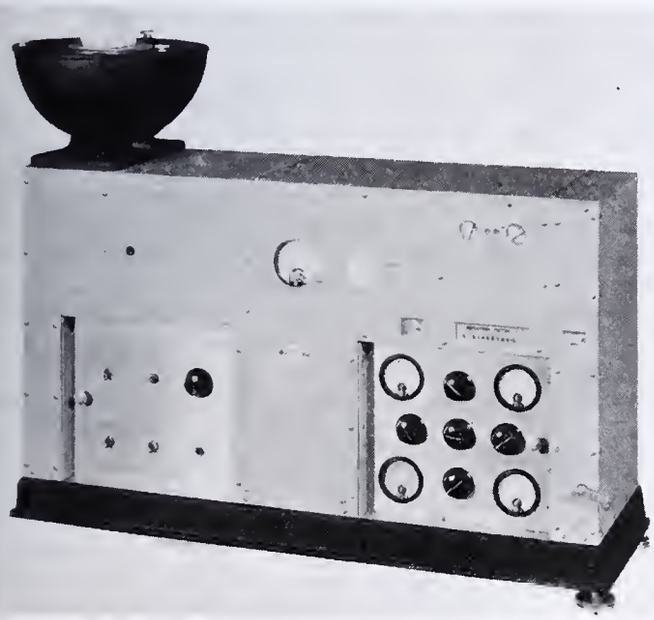

Figure 4. Razek-Mulder Recording Photoelectric Spectrophotometer

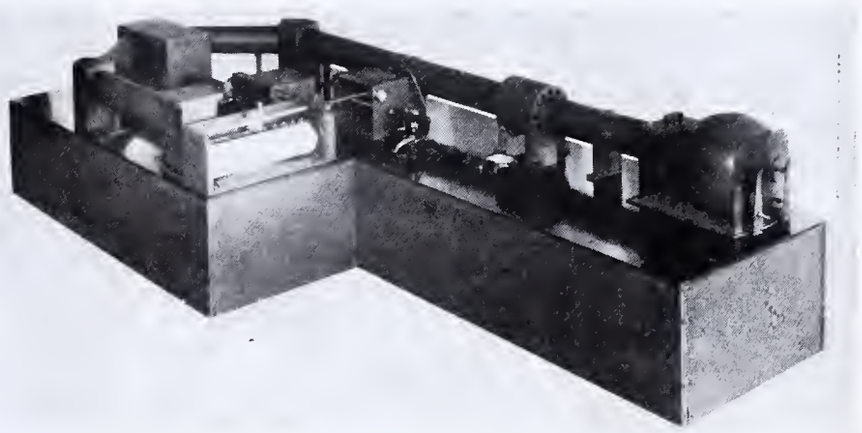

Figure 5. General Electric Recording Photoelectric Spectrophotometer

Applications

Although the analytical applications of spectrophotometry are mentioned only occasionally in books on general analytical methods, or even in works dealing with colorimetric methods of analysis, a survey of the literature reveals many papers. These cover a variety of specific applications, and they are to be found in a number of different fields. The outline below is intended to be representative of the kinds of applications that are being made.

Qualitative Uses. The transmissive or reflective characteristics of a system may be very specific. Thus, there are probably no other solutions having the same spectral transmission curve as those of neodymium salts which show a number of sharply defined large and small bands in the visual region. In such a case as this the spectrophotometric evidence is quite definite. One must always keep in mind, of course, that the shape of the curve will be changed by the presence of any other substance showing a different selective absorption or reflection.

Many solutions, glasses, and substances such as paper and paints yield curves which are relatively flat and regular. Usually the farther they go in this direction the greater is the possibility of finding several systems having about the same curve. The curves for many solutions have been determined, particularly for organic compounds in the ultraviolet region. This qualitative use of curves is equally applicable in the ultraviolet, visual, and infrared regions.

As a specific example, the recent paper of Ruehle may be cited (*39*). In the course of a study of vitamin B he obtained a compound which appeared to be a thiazole derivative. Solutions of the unknown and known compounds gave practically identical curves. As confirmatory evidence various derivatives of the known and unknown compounds were prepared and measured similarly. On obtaining curves which again agreed closely with each other for the two products the conclusion was reached that the two compounds were the same.

As a second example we may consider peanut oil and mustard oil. Two samples of such oils which had identical color values on the Lovibond scale yielded curves significantly different (*14*).

Such examples as those just given illustrate the desirability in certain cases of plotting the ordinates for a curve on some special basis. Transmission curves of the percentage–wave-length type often differ considerably in shape for different

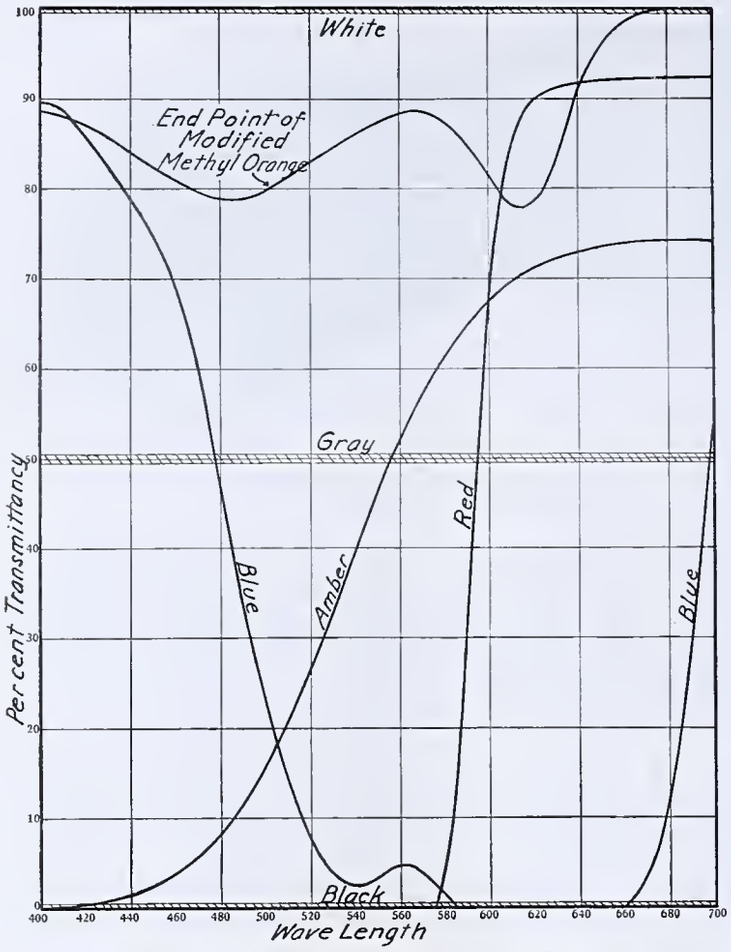

FIGURE 6. SPECTRAL TRANSMISSION CURVES

For standard red, amber, and blue glasses, and for a solution containing modified methyl orange at the end point. The location is shown for the curves for a perfect black, white, and gray (50 per cent).

thicknesses of the system measured. If one plots the logarithm of the optical density (density = 1/transmission), the curves will all have the same shape regardless of thickness. Of course one can readily convert transmissions for any given thickness to any other by means of a special slide rule, mentioned below, which has a scale based on Bouguer's law.

In a general way it may be said that this use of spectrophotometric curves applies to a variety of products for the establishment of standards and for the comparison of subsequent products with the standards. In this sense the data are comparable to measurements such as refractive indices. In a paint or dye laboratory, for example, curves would be obtained for the best obtainable or standard grades of the materials to be tested. These data are permanent and can be filed for reference at any future time. They have all the advantages inherent in any numerical specification. The effects of impurities, methods of manufacture, and other significant factors can be determined in so far as they influence the curves of the standards. Adjustment can then be made until the permissible color tolerance is attained, as measured by conformity to the standard curves. There is a wide application possible in this direction. Two examples of such uses are for dyes and textiles (*9, 35, 36, 40*), and for paint (*1, 16, 25*).

QUANTITATIVE USES. The possibility of applying spectrophotometry for making quantitative determinations by means of absorption has been recognized since the time of Vierordt (*48*). For some years such methods have been recognized by physicists (*15, 27, 41*). In more recent years chemists have begun to apply such methods to a variety of systems. Representative examples include dyes (*2, 3, 6, 13, 19, 23, 24, 49*), hydrogen-ion concentration (*7, 12*), nitrogen (*29*), hemoglobin (*10*), bilirubin (*11*), chlorophyll (*51*), vitamins and hormones (*34*), and general applications (*44, 46*).

The common method of measuring a constituent spectrophotometrically has been applied recently by Mehlig for the determination of manganese in steel (*30*). The procedure used depends upon the fact that the transmittancy of light at a given wave length is a function of the concentration for a solution such as permanganate. If a reference curve is constructed, plotting the transmittancy, at the given wave length, of a series of standard permanganate solutions against the known manganese concentrations, it is possible to convert the transmittancy of an unknown permanganate solution into concentration of manganese by use of the curve.

Before constructing such a reference curve, one should determine the transmission curve from 400 to 700 mμ for the kind of solution to be measured in order to select a suitable region for making the readings. The preferable wave length is where there is least change in transmittancy for a given change in wave length—that is, where there is a maximum or minimum in the transmission curve. On steep portions of a curve a small error in wave length results in too great an error in the transmittancy. For visual instruments the wave length selected should be as near as possible to the peak of the relative visibility curve to take advantage of the maximum sensitivity of the eye. Likewise, an inspection of the curve coördinating concentration and transmittancy shows that certain portions will yield results of greater accuracy than others. Readings in the optimum range can be obtained by suitable dilution of the sample.

In a later paper Mehlig modified the scheme for calculating the results in applying the method for the determination of copper in ores (*31*). For solutions conforming to the Bouguer-Beer equation

$$I = I_0 \times 10^{-elc}$$

in which I_0 represents the intensity of the incident light of given wave length entering the solution, I the intensity on leaving the solution, l the length of the cell in centimeters, c the moles of absorbing substance per liter of solution, and e the molecular extinction coefficient. Solving for c, we have

$$c = \frac{\log \frac{I_0}{I}}{el} \text{ moles per liter}$$

The values for I_0, I, and l are known for any given determination. It is necessary to prepare a solution containing a known concentration, c, in order to calculate the value of e for the desired wave lengths for use in subsequent work. As in the use of a concentration-transmittancy curve, the wave lengths selected should be those of the optimum portion of the transmission curve.

Such quantitative methods have been designated by Barnard and McMichael (*4*) as "analysis by monochromatic transmission." These authors have developed a derivation of Bouguer's law which enables one to calculate the proportions of the components in a binary mixture from measurements of the transmittancies of each component and of the mixture at some one wave length. Twyman and Allsopp discuss such systems also (*46, 47*). Ternary mixtures having certain types of curves for the separate components may be handled in much the same way. Except under the best of conditions, the accuracy of the results obtained in this way is not all one would wish.

In connection with his work on copper ores, Mehlig reached the conclusion that the spectrophotometric method gave results as good as the titrimetric iodide method and that the data were obtained more rapidly and more conveniently. At present such methods seem of value chiefly for colored systems, since photographic methods have hardly sufficient accuracy. As reliable apparatus is expensive for the ordinary laboratory, the present outlook is that this kind of method will be of value chiefly in situations where some other method is not available, as in the work of Zscheile on chlorophyll.

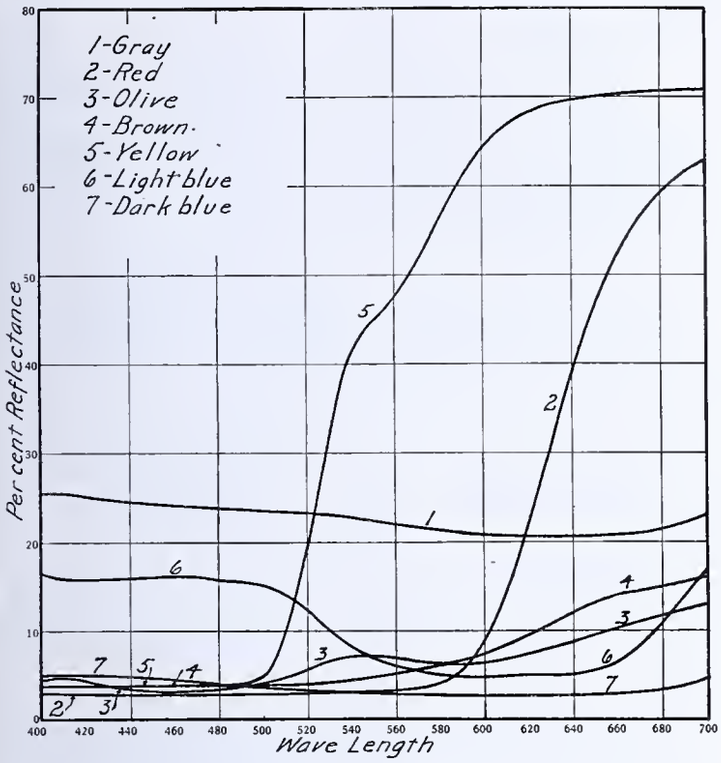

FIGURE 7. SPECTRAL REFLECTION CURVES

For porcelain enamel paint standards

COLOR ANALYSIS. Current chemical publications are almost devoid of suggestions for using the results of "color analysis." As generally understood, the expression refers to the combination of stimuli found to be equivalent to the color being measured or analyzed. The results are expressed numerically and represent a unique specification of the color. The results for the trichromatic system are expressed in percentages of the three primary stimuli, red, green, and violet, while those for the monochromatic system are expressed in dominant wave length and in percentages of brightness and purity. The latter values may be taken, respectively, as measurements of the three attributes of color—hue, relative brilliance, and saturation.

The ordinary spectrophotometer yields directly only data upon the basis of which one may plot graphs such as transmittancy–wave-length curves. In such cases the values mentioned above must be calculated. The means for accomplishing the calculation have been readily available since the appearance in 1922 of the report of the Colorimetry Committee (*43*). For use with the data in this publication a special Keuffel and Esser color slide rule was of advantage. An example of its application was given by the author (*32*). In 1931 the International Commission on Illumination adopted more reliable data (*21*, *26*) which have now superseded those used earlier. Using the selected ordinate method, outlined by Hardy (*20*, *21*), calculations on an adding machine are accomplished fairly rapidly. A device developed in the author's laboratory (*42*) facilitates the operation still more. Hardy designed a calculating machine (*20*) for operation in conjunction with his recording photoelectric spectrophotometer, and Pineo has recommended its use for testing textile dyeing (*37*).

So little has been accomplished to bring these numerical evaluations of colorimetric characteristics into everyday use that one can hardly predict to what extent they will become a part of our thinking about colors in the near future. Undoubtedly the invention of rapid, reliable spectrophotometers and the simplification of the tristimulus calculations will do much to extend the application of such data.

The numerical values represent a kind of color language which is more definite than a system based upon samples of colored materials. They provide a specification for a color so that one can form from them an idea of the color without seeing it. A few examples will illustrate the possibilities. Pineo (*37*) has pointed out the value of trichromatic characteristics in measuring color fading, in color matching, and in dyeing control. Shelton and Emerson comment on the possibility of using such data for dyed fabrics (*40*). Hardy (*21*) gives the brightness, dominant wave length, and purity of some colors that are widely used. Since January, 1935, the colors of the United States flag have been specified in trichromatic values by the Bureau of Standards (*8*).

RESEARCH WORK. In many research problems, both in analytical and other fields, one encounters color as a significant and variable property in the system under study. In such cases chemists who have such equipment available are coming more and more to rely upon spectrophotometers as an important means for obtaining valuable information. In some instances it represents the most important use of such instruments. Objective data are provided showing at once the effect on the color of variables such as pH value, concentration and purity of reagents, constituents in the system affecting the color, the order of adding reagents, the stability of the color, and other factors.

A photoelectric instrument, on account of the sensitivity of the cell in the violet and red regions, is particularly valuable for detecting small differences in the spectrophotometric curves. Nutting has reported (*35*, *36*) recent observations on this point. A recording instrument enables one to obtain a series of curves quickly on the same sheet of paper. By using pens containing different colored inks, especially interesting comparisons can be brought out.

Literature Cited

(1) Am. Soc. Testing Materials, Designation D 307–30, "Standard Methods of Analysis," 1930.
(2) Appel and Brode, IND. ENG. CHEM., **16**, 797 (1924).
(3) Appel, Brode, and Welch, *Ibid.*, **18**, 627 (1926).
(4) Barnard and McMichael, IND. ENG. CHEM., Anal. Ed., **2**, 363 (1930).
(5) Benford, *Trans. Illum. Eng. Soc.*, **18**, 67 (1923).
(6) Brode, IND. ENG. CHEM., **18**, 708 (1926).
(7) Brode, *J. Am. Chem. Soc.*, **46**, 581 (1924).
(8) Bur. Standards, Federal Specification TT-C-591 (1935).
(9) Cuncliffe, *J. Soc. Dyers Colourists*, **45**, 305 (1929).
(10) Davis and Sheard, *Arch. Internal Med.*, **40**, 226 (1927).
(11) Davis and Sheard, *J. Lab. Clin. Med.*, **19**, 593 (1924).
(12) Deforge, *Halle aux Cuirs, Suppl. tech.*, **1927**, 229.
(13) Draves, *J. Optical Soc. Am.*, **21**, 336 (1931).
(14) Ellsworth, Barnard, and McMichael, *Oil & Fat Ind.*, **7**, 15 (1930).
(15) Ferry, "Physics Measurements," Vol. I, pp. 150, 225, New York, John Wiley & Sons, 1926.
(16) Gardner, "Physical and Chemical Examination of Paints," Chap. IV, Washington, D. C., Institute of Paint and Varnish Institute, 1935.
(17) Gibson, *J. Optical Soc. Am.*, **21**, 564 (1931).
(18) Gibson et al., *Ibid.*, **10**, 169 (1925).
(19) Gibson et al., U. S. Bur. Standards, *Sci. Paper* 440 (1922).
(20) Hardy, *J. Optical Soc.*, **25**, 305 (1935).
(21) Hardy et al., "Handbook of Colorimetry," Boston, Technology Press, 1936.
(22) Hardy and Perrin, "The Principles of Optics," p. 310, New York, McGraw-Hill Book Co., 1932.
(23) Holmes, IND. ENG. CHEM., **15**, 833 (1923).
(24) Holmes, Scanlon, and Peterson, U. S. Dept. Agr., *Tech. Bull.* 310 (1932).
(25) Ingalls, *Proc. Am. Soc. Testing Materials*, **26**, 347 (1926).
(26) Judd, *J. Optical Soc.*, **23**, 359 (1933).
(27) Krüss, "Kolorimetrie und quantitative Spectralanalyse," p. 291, 1891.
(28) McNicholas, U. S. Bur. Standards, *Research Paper* 30 (1928).
(29) Main and Locke, *J. Biol. Chem.*, **64**, 75 (1925).
(30) Mehlig, IND. ENG. CHEM., Anal. Ed., **7**, 27 (1935).
(31) *Ibid.*, **7**, 387 (1935).
(32) Mellon, *J. Phys. Chem.*, **33**, 1931 (1929).
(33) Mellon, Ferner, and Mehlig, *J. Chem. Education*, **10**, 691 (1933).
(33A) Michaelson and Liebhafsky, *Gen. Elec. Rev.*, **39**, 445 (1936).
(34) Morton, "The Application of Absorption Spectra to the Study of Vitamins and Hormones," London, Adam Hilger, 1935.

(35) Nutting, *Am. Dyestuff Reptr.*, **23**, 251, 275 (1934); *Textile Research*, **4**, 323 (1934).
(36) Nutting, *J. Optical Soc.*, **24**, 135 (1935).
(37) Pineo, *Am. Dyestuff Reptr.*, **22**, 470 (1933).
(38) Razek and Mulder, British Patent 349,565 (1931); *J. Optical Soc. Am.*, **20**, 155 (1930).
(39) Ruehle, *J. Am. Chem. Soc.*, **57**, 1887 (1935).
(40) Shelton and Emerson, Ind. Eng. Chem., Anal. Ed., **4**, 248 (1932).
(41) Spitzer, thesis, Purdue University, 1910.
(42) Swank, unpublished paper.
(43) Troland et al., *J. Optical Soc. Am.*, **6**, 527 (1922).
(44) Twyman, *Chemistry and Industry*, **49**, 535, 578 (1930).
(45) Twyman and Allsopp, "The Practice of Absorption Spectrophotometry," p. 18, London, Adam Hilger, 1934.
(46) *Ibid.*, p. 26.
(47) *Ibid.*, p. 41.
(48) Vierordt, "Die Anwendung des Spectralapparates zur Photometrie der Absorptionspectren und zur quantitative chemischen Analyse," Tubingen, 1873.
(49) Wales, *Am. Dyestuff Reptr.*, **12**, 751, 791, 855, 863 (1923).
(50) Weigert, "Optische Methoden der Chemie," Chap. VII, Leipzig, Akademische Verlagsgesellschaft, 1927.
(51) Zscheile, *J. Phys. Chem.*, **38**, 95 (1934).
(52) Zscheile, Hogness, and Young, *Ibid.*, **38**, 1 (1934).

Received September 18, 1936. Presented before the Division of Physical and Inorganic Chemistry, Symposium on Colorimetry, at the 92nd Meeting of the American Chemical Society, Pittsburgh, Pa., September 7 to 11, 1936.

Determination of Diarylamines in Rubber Compositions

DAVID CRAIG, The B. F. Goodrich Company, Akron, Ohio

THIS paper deals with semi-quantitative methods for the determination of certain typical diarylamine age resisters—namely, diphenylamine, phenyl-β-naphthylamine, and *N,N'*-diphenyl-*p*-phenylenediamine. It serves as an essential feature of a study of the general behavior of these materials in rubber to be discussed in a subsequent communication.

Previous methods for the detection and estimation of rubber age resisters have been of limited though of useful application. Thus Endô (*3*) described the colors produced by the action of sulfuric acid on a large number of commercial age resisters unmixed with rubber. Later Endô (*4*) published papers dealing with the action of concentrated nitric acid and Erdman reagent (solution of 0.5 ml. of concentrated nitric acid in 100 ml. of concentrated sulfuric acid) as well as of Mandelin reagent (solution of 1 gram of ammonium vanadate in 200 grams of concentrated sulfuric acid) and of concentrated sulfuric acid containing 1 per cent of arsenic acid.

Tests similar to those of Endô have been used in this laboratory. For example, a good test for the presence of *N,N'*-di-β-naphthyl-*p*-phenylenediamine in a rubber mixture involves cutting a gram of the stock into fine pieces and covering them with concentrated sulfuric acid. After several minutes the acid layer, which is usually straw-colored, is decanted and treated with one drop of a 10 per cent mixture of concentrated nitric acid in concentrated sulfuric acid. If the diamine is present a blue color appears immediately. The presence of *N,N'*-diphenyl-*p*-phenylenediamine is attended by the formation of a red color under these conditions. This test is not vitiated by the presence of the usual quantities of diphenylamine or the phenylnaphthylamines which may be present in the rubber. If neither a red nor a purple color is produced it is probably safe to say that less than 0.1 per cent of either diamine is present. Interfering substances sometimes produce colors with sulfuric acid alone—for example, 2,4-diaminodiphenylamine produces a deep red which changes somewhat when nitric acid is added.

Usually age resisters cause staining of the surface of light-colored stocks during cure or during aging. The colors produced, especially those arising from exposure to light, are more or less characteristic of the age resister present. Kirchof (*6*) has suggested the use of metallic salts with or without exposure to light for the purpose of distinguishing certain antioxidants, but this suggestion seems not to have been adopted. Morris (*7*) has published preliminary data on the fluorescent colors of several antioxidants.

Sometimes an age resister will bloom in sufficient amounts so that it can be removed, purified, if necessary, and identified by the usual qualitative methods, such as the determination of the melting point and mixed melting point with an authentic specimen. Thus *N,N'*-diphenyl-*p*-phenylenediamine, phenyl-β-naphthylamine, *p*-phenylphenol, *p*-hydroxy-*N*-phenylmorpholine, *p*-triphenylmethyldiphenylamine, and others have been detected and identified. In a similar manner antioxidants have been recognized occasionally in the sediment from rubber cements. No one seems to have subjected rubber to very low temperatures for the specific purpose of causing age-resister bloom, although icebox temperatures have been tried occasionally. A microscope for the examination of rubber surfaces is of great help in identifying the presence of certain antioxidants.

The isolation of age resisters from rubber by extraction with solvents (*1*, *5*) has been infrequently reported in the literature, including those which are removable from crude rubber by extraction with acetone.

At the beginning of the present work it was found possible to remove phenyl-β-naphthylamine from rubber by extraction with acetone or with constant-boiling methanol-benzene mixture. The amine could then be steam-distilled from the dried extract or it could be precipitated from hexane or benzene solution as phenyl-β-naphthylammonium chloride. The extracts, however, were rather intractable, and the recovery of amine was low in all experiments.

A much better method involved the steam-distillation of diarylamines from rubber. The preliminary results were successful and seem to be of sufficient interest to warrant publication. Thus it is possible to isolate such amines as phenyl-β-naphthylamine, *N,N'*-diphenyl-*p*-phenylenediamine, and diphenylamine from rubber as the pure compounds or in the form of suitable derivatives.

Procedures

Determination of Phenyl-β-naphthylamine. Aside from the removal of sulfur and other alkali-soluble materials by reaction with sodium hydroxide, the only reactions involved in this determination are the formation of the hydrochloride of the amine and the subsequent hydrolysis of the hydrochloride.

The stock is preferably either ground to pass a 14-mesh screen or is sheeted on a tight mill. For batches containing between 1 and 2 per cent of antioxidant a 30-gram sample is used, but for higher concentrations the weight can be reduced correspondingly. The 30-gram sample is refluxed with 600 ml. of water and 7.5

grams of sodium hydroxide for 2 hours. The hot mother liquor is then decanted or removed by filtering. After washing the stock with a small amount of hot water it is refluxed with 600 ml. of water and 1 gram of sodium hydroxide. The extracted stock is then transferred to the distillation tube, *A*, shown in Figure 1, in the neck of which is a filter plug of glass wool. The stock is finally washed with a small amount of hot water. The tube is then submerged in the hot oil bath, *D*, and steam is introduced at 170° to 180° at such a rate that 4 to 4.5 liters of distillate are collected during 2.5 to 3 hours. It passes through an air condenser into a receiver cooled with water.

The distillate has a characteristic rubber-like odor. It is neutral to litmus. The suspended matter that is present is nearly colorless and contains, in addition to the antioxidant, a quantity of stearic acid and other material soluble in alkali, presumably fatty acids. The suspended matter is easily filtered off, especially after it has stood overnight, which is the usual practice.

For this operation a 60-mm. Büchner funnel with a No. 2 Whatman filter paper has been found convenient. When as much as possible of the water has been removed by suction, the Büchner funnel is transferred to a tared 50-ml. suction flask and the solid matter, including that deposited in the air condenser and the receiving flask, is rinsed through the funnel into the suction flask with 75 ml. of ether from a 10-ml. pipet. Much of the ether is lost through evaporation during the rinsing operation. If 0.5 cc. or more of water is collected in the suction flask, it is removed by means of a pipet and washed with a little ether, using the pipet also for this washing operation. The wash ether is then added to the suction flask and all the ether is evaporated on the steam plate. Small amounts of water can be removed by adding 10 ml. of benzene and evaporating until the benzene is removed. The last traces of water are removed by heating for 20 minutes in an oven at 120° to 130°.

The solid remaining, to be referred to as the "residue from the ether evaporation," is weighed to 0.01 gram, and dissolved in 10 to 20 ml. of warm hexane. A stream of hydrogen chloride is allowed to play for a few minutes over the surface of the solution while it cools to room temperature. The hydrogen chloride causes phenyl-β-naphthylamine hydrochloride to precipitate as a clot that clings firmly to the bottom and walls of the flask. The precipitation is complete when the mother liquor becomes clear or has stood for 2 hours. The mother liquor is then poured into another tared flask and the hydrochloride washed with a few milliliters of hexane. The washings are united with the mother liquor and evaporated to dryness, finally, in the oven at 120° to 130° for 20 minutes. The residue, known as the "residue from the hexane evaporation," is then weighed to 0.01 gram. It contains nonbasic materials.

The flask containing the hydrochloride is quickly evacuated in a vacuum desiccator and weighed to 0.01 gram. The hydrochloride is not pure, but seems to contain traces of free hydrochloric acid and possibly traces of other difficultly volatile material. It is hygroscopic. In order to determine the phenyl-β-naphthylamine content, the hydrochloride is hydrolyzed. This is easily done by boiling with 10 ml. of benzene and 10 ml. of water until the solid has dissolved. The water layer is then separated and washed with ether by means of a pipet. The ether washings are added to the benzene layer, which is then evaporated on the steam plate until the solvent is removed. The last traces of water are removed by heating for 20 minutes in an oven at 120° to 130°. The residue is phenyl-β-naphthylamine, and is weighed to 0.01 gram.

A description in more detail of the apparatus shown in Figure 1 follows.

The distillation tube, *A*, is made by bending a piece of Pyrex tubing 30 cm. (12 inches) long and 4.4 cm. (1.75 inches) in outside diameter, so that it can be submerged in the oil bath, *D*. A neck made from a piece of 1.25 cm. (0.5 inch) outside diameter tubing is attached and bent so that it can be connected to the short air condenser, *E*. The thermometer well in *A* is inserted by means of a ring seal. The brass superheater, *B*, of the type sold by the Fisher Scientific Company, is fitted with a thermometer well and 0.6-cm. (0.25 inch) copper tubing connections. The steam generator, *C*, is a 20-liter (5-gallon) steel drum. Service line steam is unsatisfactory because of admixed oxygen. The still head on *C* has a bulb of 300-ml. volume. The steam generator, *C*, the superheater, *B*, and the oil bath, *D*, are heated with gas burners. The receiver, *F*, is a 5-liter balloon flask cooled with tap water. The various parts of the apparatus are connected by means of rubber tubing or rubber stoppers.

It is probable that the precision and speed of conducting the determinations would be improved by the use of small all-glass apparatus, thus making it possible to use small samples.

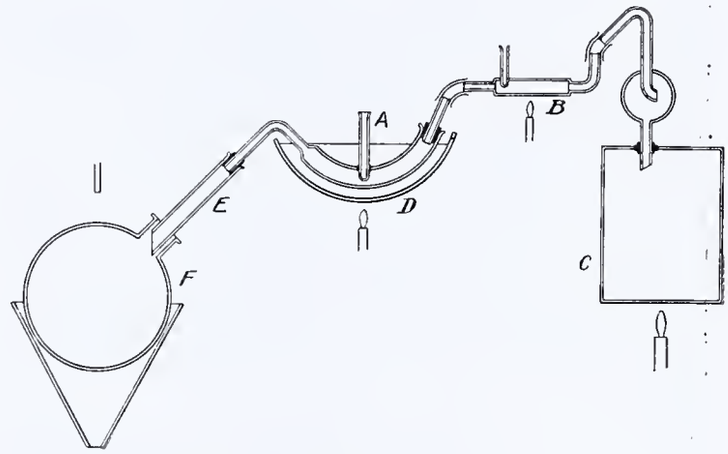

FIGURE 1. DIAGRAM OF APPARATUS

DETERMINATION OF *N,N'*-DIPHENYL-*p*-PHENYLENEDIAMINE. The procedure is the same as that for phenyl-β-naphthylamine up to the point of the hydrochloride precipitation. Here benzene must be substituted for hexane, and benzene must be used instead of ether to wash the product into the precipitation flask.

Since the hydrochloride does not adhere well to the precipitation flask, filtration is necessary in order to separate the mother liquor. The hydrochloride is collected in the precipitation flask and hydrolyzed by boiling for several minutes with a mixture of 5 ml. of water, 3 ml. of concentrated ammonium hydroxide, and 5 ml. of benzene. The water layer is separated by means of a pipet and washed with a few milliliters of benzene. The benzene layers are united and evaporated to dryness. Finally the residue is heated for 20 minutes at 120° to 130° C. and weighed. It should melt at approximately 145°.

DETERMINATION OF DIPHENYLAMINE. The procedure given for phenyl-β-naphthylamine can also be used for diphenylamine if due allowance is made for volatility and for solubility in the extracting solutions. It is more convenient, however, since diphenylamine is volatile in steam at 100°, to use a modification of Cook's method (*2*) for diphenylamine in smokeless powder.

A 30-gram sample of the stock, 5 grams of sodium hydroxide, and 3 liters of water are distilled in a 5-liter distilling flask until 4 liters of distillate have been collected. Water is added to the distillation flask from time to time as necessary. The diphenylamine is extracted from the distillate with three 75-ml. portions of petroleum ether. The extracts are collected in a tared 150-ml. flask and evaporated to a volume of about 5 ml. Five milliliters of ether and 8 ml. of a 10 per cent solution of bromine in carbon tetrachloride are added. The solvents are boiled off and the residue is heated in a current of air at about 80° during 20 minutes. It is then dissolved in 5 to 10 ml. of hot benzene. The benzene is removed in a current of air at about 80° and heated to constant weight at this temperature. The melting point of the residue, which is 2,2',4,4'-tetrabromodiphenylamine, should be between 178° and 185°. A low melting point usually indicates incomplete bromination, although aged rubber usually gives a product of somewhat lower melting point.

Notes on Procedures

Several solvents were used for extracting small amounts of the diarylamines from water. Ether was objectionable because of its high solubility in water. Hexane and petroleum ether (b. p. 40° to 50°) were satisfactory for phenyl-β-naphthylamine and diphenylamine. *N,N'*-diphenyl-*p*-

phenylenediamine was usually extracted with benzene in which it is rather soluble. This amine is almost insoluble in hexane.

Diphenylamine can be isolated as the hydrochloride by a method similar to that for phenyl-β-naphthylamine, provided ample precautions are taken to prevent loss by volatilization. Although bromination of diphenylamine gives a single derivative favorable to quantitative estimation, preliminary experiments indicated that the bromination of phenyl-β-naphthylamine is not a satisfactory quantitative procedure because of the formation of several products.

Generally accepted values for the melting point of *N,N'*-diphenyl-*p*-phenylenediamine are in the neighborhood of 145° to 152°. During this study it was found that the compound actually has a double melting point, the first being at approximately 147° and the second at 152–153°. After recrystallization from alcohol or benzene, melting occurs at the lower temperature when the melting point tube is immersed in the previously heated bath; resolidification then takes place and, as the temperature is raised, remelting occurs at 152–153°.

In the procedure for diphenylamine the solution of the tetrabromo derivative in benzene before drying to constant weight is not necessary although it aids somewhat in removing hydrobromic acid.

Results and Discussion

Phenyl-β-naphthylamine without Rubber. In a few leading experiments this amine was steam-distilled in the absence of rubber. At 100° the rate was too slow to be practicable, but at a higher temperature a convenient rate was obtained.

A quantity (0.50 gram) of phenyl-β-naphthylamine was placed in the distilling tube, *A* (Figure 1), and 4100 ml. of distillate were collected with the temperature in *A* at 165° to 175°. The distillate was worked up in the usual manner except that the hydrochloride precipitation was omitted. The yield of recovered phenyl-β-naphthylamine was 0.49 gram. It melted at 108–109°. The filtrate (4000 ml.) was extracted with 100 ml. of hexane and then with 50 ml. of hexane. A large rubber stopper was used to close the flask during extraction. The hexane extracts were united and evaporated to dryness, leaving an oily residue of 0.0306 gram. Solution of this in 5 ml. of hexane and treatment with hydrochloric acid gave 0.0049 gram of precipitate from which no phenyl-β-naphthylamine could be isolated by treatment with benzene and water in the usual way.

Phenyl-β-naphthylamine from High-Gum Stock A. A sheet of stock A, cured 70 minutes at 126.67° C. (260° F.), was used. The recipe for stock A is:

High-Gum Stock A	
Rubber	100
Phenyl-β-naphthylamine	1
Zinc oxide	2
Stearic acid	2
Accelerator	0.3
Sulfur	1.25
	106.55

On milling, a crumbly sheet resulted and a 20-gram sample was analyzed in the usual way except that the steam-distillation was conducted at 165–170°.

	Gram
Residue from ether evaporation	0.27
Weight of hydrochloride	0.22
Residue from hexane evaporation	0.08
Yield of phenyl-β-naphthylamine (m. p. 107–108°)	0.17

The yield of 0.17 gram of phenyl-β-naphthylamine represents a recovery of 90.5 per cent of that added to the stock.

When 3 liters of the filtrate from this experiment were extracted with 100-ml. and 50-ml. portions of petroleum ether, and the extracts united and evaporated, a residue of 0.015 gram remained. This residue was oily and gave a few crystals when seeded with phenyl-β-naphthylamine. However, when dissolved in 10 cc. of hexane and treated with hydrochloric acid, a precipitate weighing less than 0.005 gram resulted. On boiling with water and benzene no phenyl-β-naphthylamine could be isolated. From this it is certain that the amount of phenyl-β-naphthylamine remaining dissolved in the filtrate from the distillate is less than 0.0017 gram per liter.

Phenyl-β-naphthylamine from Tread Stock Applied by Dipping. The stock used had the following composition:

Tread Stock B	
Rubber	100
Sulfur	3
Mercaptobenzothiazole	1
Stearic acid	4
Zinc oxide	5
Gas black	50
	163

A sheet of this stock cured 80 minutes at 128.89° C. (264° F.) was divided into two equal parts. Each part was cut into strips approximately 2.5 × 10 cm. (1 × 4 inches), and weighed 37 grams. The following procedure was used for both parts in order to test the reproducibility of the experiments. The 37 grams of strips were immersed for 10 minutes in a solution prepared from 7 grams of phenyl-β-naphthylamine and 70 ml. of benzene-methanol constant-boiling mixtures. After draining the solution from the strips, the solvent was evaporated and the weight of residue determined. This residue represents the unabsorbed phenyl-β-naphthylamine. The strips which were covered with a layer of powdery phenyl-β-naphthylamine were cut up into small pieces about 2.5 × 0.15 × 0.023 cm. (1 × 0.063 × 0.093 inch) in size. They were then introduced into the steam-distillation tube and steam-distilled in the usual way but with the omission of alkali extraction.

Table I summarizes the data for both parts of stock used.

Table I. Tests on Tread Stock B.

	First Part		Second Part	
		Melting Point		Melting Point
	Grams	° *C.*	*Grams*	° *C.*
Total phenyl-β-naphthylamine in solution	7.00	108–109	7.00	108–109
Phenyl-β-naphthylamine unabsorbed	6.79	106–108	6.80	106–108
Residue from ether evaporation	0.83	...	0.87	...
Phenyl-β-naphthylamine after hydrochloride precipitation and hydrolysis	0.25	104–107	0.24	104–107
Phenyl-β-naphthylamine unabsorbed plus that absorbed	7.04	...	7.04	...

It can be seen from Table I that the results for the two parts check nicely but that the amounts of phenyl-β-naphthylamine accounted for are somewhat high. This can be explained as being due to impurities in the recovered phenyl-β-naphthylamine indicated by the low melting points. The low melting point of the phenyl-β-naphthylamine recovered by the steam-distillation indicates the possible presence of thiophenyl-β-naphthylamine formed by reaction with free sulfur.

Phenyl-β-naphthylamine from Tread Stock B Incorporated before Vulcanization by Milling. Table II summarizes the results for phenyl-β-naphthylamine for an undercure and an overcure, and indicates that the per cent recovery of antioxidant is not dependent to any great extent on the time of cure. If the amount of amine recovered is measured by the weight of hydrochloride and the equivalent weight of amine calculated on the basis of one molecule of hydrochloric and for each amine molecule, the results will be too high, owing to difficultly volatile impurities. If the weight of residue from the hexane evaporation is added to the weight of phenyl-β-naphthylamine in each case, the value approaches the weight of residue from the ether evaporation. The material in the residue from the hexane evaporation is partly soluble in dilute sodium hydroxide and con-

Table II. Steam-Distillation Recovery of Phenyl-β-naphthylamine from Tread Stock B

(Cured at 264° F.)

Time of Cure	Weight of Sample	Amine Added on the Rubber	Amine Present in Sample	Residue from Ether Evaporation	Hydrochloride Yield	Amine Equivalent	Recovery of Amine		Residue from Hexane Evaporation
Min.	*Grams*	%	*Gram*	*Gram*	*Gram*		*Gram*	%	*Gram*
20	30	1	0.183	0.25	0.18	0.16	0.15	82	0.11
	30	2	0.364	0.39	0.36	0.31	0.29	79	0.10
	20	3	0.362	0.38	0.35	0.30	0.28	76	0.09
160	30	1	0.183	0.28	0.17	0.15	0.14	76	0.12
	30	2	0.364	0.43	0.36	0.31	0.28	76	0.14
	20	3	0.362	0.39	0.36	0.31	0.26	71	0.11

sists in part of stearic acid. Fatty acids could arise from the hydrolysis of soaps or glycerides during the steam-distillation. The reproducibility of the recovery of antioxidant is believed to be within 5 per cent.

It was of interest to test the steam-distillation of the ground stock before alkali-extracting it. The determination for the 20-minute cure of tread stock B containing 3 per cent of age resister on the rubber was therefore repeated omitting the extraction. The residue from the ether evaporation weighed 0.99 gram and on treatment with hexane in the usual manner not quite all of this dissolved. Dry hydrochloric acid was passed into the flask. The yield of hydrochloride amounted to 0.41 gram. On hydrolysis in the usual way 0.32 gram of crude phenyl-β-naphthylamine resulted (m. p. 103–106°). From the rather turbid hexane mother liquor when allowed to stand overnight there was precipitated 0.05 gram of solid which was thoroughly washed with benzene. The crystals remaining were identified as sulfur by melting point (115–118°) and mixed melting point (117–119°) with an authentic specimen. Not only does free sulfur steam-distill from rubber but undoubtedly it begins to react with the antioxidant at 170–180°, thus justifying the alkali-extraction previous to the steam-distillation.

N,N'-Diphenyl-*p*-phenylenediamine Incorporated before Vulcanization by Milling. High-gum stock C which was used in some of the experiments had the following composition: Optimum cure was 60 minutes at 125.56° C. (258° F.).

High-Gum Stock C	
Rubber	100
Stearic acid	1
Sulfur	3
Zinc oxide	2
Tetramethyl thiuram disulfide	0.1
	106.1

Table III shows the recovery of antioxidant from tread stock B (cured 160 minutes at 128.89° C., 264° F.) and high-gum stock C (cured 60 minutes at 125.56° C., 258° F.) in per cent of that added.

Diphenylamine Incorporated by Milling. The results for tread stock B (cured 160 minutes at 128.89° C., 264° F.) and high-gum stock C (cured at 125.56° C., 258° F.) are shown in Table IV.

The volatility of diphenylamine probably explains the relatively low recovery from the stocks containing 3 per cent of diphenylamine. When tread stock B, originally containing 3 per cent of diphenylamine on the rubber, was allowed to stand in the ground condition for 10 weeks and then analyzed, a recovery of only 72 per cent was obtained. The recovery of 80 per cent, shown in Table IV, was obtained shortly after mixing and curing.

Application of Method to Other High Molecular Weight Materials. It has been recorded in the literature that phenyl-β-naphthylamine is active for controlling the polymerization of chloroprene. In order to see if the commercial polymer contained this antioxidant, a sample of Duprene was sheeted out on the mill.

A 40-gram sample was wrapped in cheesecloth and steam-distilled at 170–180°. During this time considerable amounts of acid were evolved and the cheesecloth was badly decomposed. The distillate, which was oily, was extracted first with 100 ml. and then with 50 ml. of hexane. The extracts were united, evaporated to dryness, and the residue was analyzed in the usual way for phenyl-β-naphthylamine. The amount recovered was 0.10 gram, corresponding to 0.25 per cent on the Duprene. It melted at 105–107° alone and at 106–109° when mixed with an authentic specimen.

A stock similar in composition to tread stock B with mercaptobenzothiazole omitted and with the rubber replaced by polyisobutylene (molecular weight, approximately 100,000) was used with 1 per cent of phenyl-β-naphthylamine based on the polyisobutylene. When this stock was analyzed in the usual way, sulfur appeared in the distillate and the recovery of phenyl-β-naphthylamine amounted to 55 per cent. In this case the amine was separated from the sulfur by hexane extraction before precipitation with hydrogen chloride. The amine recovered melted at 100–104° and probably contained some thiophenyl-β-naphthylamine formed by reaction with sulfur not completely removed by alkali extraction.

Table III. Recovery of Antioxidant

Concentration of Antioxidant on Rubber	Recovery of Antioxidant: Tread stock B	Recovery of Antioxidant: High-gum stock *C*
	%	%
0.5	16	65
1.0	44	83
3.0	64	85

Table IV. Recovery of Antioxidant

Concentration of Antioxidant on Rubber	Recovery of Antioxidant: Tread stock B	High-gum stock C: 30 min.	High-gum stock C: 60 min.	High-gum stock C: 120 min.
	%	%	%	%
0.5	85	87	89	93
1.0	90	..	91	..
3.0	80	..	78	..

The procedures outlined have been used in analyzing factory stocks for age resisters. They have many times been found useful in clearing up questions as to the identity of certain stocks. Other applications, such as those relating to the behavior of age resisters during aging, will be treated in a subsequent communication.

Literature Cited

(1) Bruson, Sebrell, and Vogt, Ind. Eng. Chem., 19, 1187 (1927).
(2) Cook, *Ibid.*, Anal. Ed., 7, 250 (1935).
(3) Endô, *J. Soc. Chem. Ind., Japan*, 38 (suppl. binding), 618 (1935).
(4) *Ibid.*, 39 (suppl. binding), 11, 12 (1936).
(5) Garner, Inst. Rubber Ind. Trans., 4, 413 (1929).
(6) Kirchof, *Kautschuk*, 7, 7 (1931).
(7) Morris, Ind. Eng. Chem., 26, 107 (1934).

Received September 18, 1936. Presented before the Division of Rubber Chemistry at the 92nd Meeting of the American Chemical Society, Pittsburgh, Pa., September 7 to 11, 1936.

Determination of Quartz in the Presence of Silicates

WILLARD R. LINE AND PAUL W. ARADINE, University of Rochester, Rochester, N. Y.

A new method in which silicates are decomposed by fluoboric acid is proposed for the determination of free silica in the presence of silicates. This acid has less action on quartz than fluosilicic acid and is more stable at elevated temperatures. The decomposition of a number of common, insoluble silicates has been determined, and the analyses of several synthetic silicate-quartz mixtures are reported. These results show that the amount of quartz in the synthetic mixtures can be determined with a precision of approximately 1 per cent.

THE existing methods for the determination of free silica in the presence of silicates are unsatisfactory from the point of view of general applicability, accuracy, and time required. The most reliable method, that of "ultimate analysis," is time-consuming. The Lunge-Millberg (*8*) method of "rational analysis," which has been modified by Selvig, is applicable only to special kinds of silicates—the coal measure rocks and shales. The modified petrographic immersion method of Ross and Sehl (*7*) is capable of only a "reasonable accuracy." The simple, rapid method of Knopf (*2*), in which the silicate is dissolved in fluosilicic acid after preliminary treatment and petrographic examination of the sample, is unsatisfactory because of the large correction factor resulting from the action of this acid on quartz. In some cases the petrographic examination of a thin section of the rock or material may permit an estimate of the quartz by the Rosiwal method (*5, 7*).

A new method in which silicates are decomposed by fluoboric acid, which attacks free silica much less than does fluosilicic acid, is here proposed for the determination of free silica in the presence of silicates (*1*).

Fluoboric acid was prepared by the method of Berzelius by adding boric acid to a concentrated (48 per cent) solution of hydrofluoric acid. The reaction is supposed to be

$$H_3BO_3 + 2H_2F_2 = HBF_4 + 3H_2O$$

but doubt was cast upon the correctness of this reaction by the work of Travers and Malaprade (*9*) who state that hydrofluoric and boric acids instantly react to form a fluoboric acid different from HBF_4. Mellor (*6*) states that a compound such as $HBF_4 \cdot 2HF$ or $BF_3 \cdot 3HF$ has been reported, but that the work has not been confirmed. That such a compound may readily be formed is borne out by the fact that when hydrofluoric acid is added to fluoboric acid and the mixture shaken, no test for fluoride can be obtained with either lead nitrate or calcium chloride solutions.

The acid obtained by the above reaction is a slightly yellow, fuming, sirupy liquid with a specific gravity of about 1.45. It is a moderately strong acid which decomposes slowly at its boiling point. Its salts, most of which are soluble, slowly hydrolyze in warm water. Dilute solutions of the acid attack glass only very slowly, and even concentrated solutions can be filtered in glass apparatus without appreciable etching. The volumetric methods of analysis applicable to fluosilicic acid were found to be unsatisfactory for fluoboric acid. However, the gravimetric method suggested by Lange (*3*) in which HBF_4 is precipitated as nitron·HBF_4 has been successfully used for the analysis of the various fluoboric acid solutions prepared.

Action of Fluoboric Acid on Quartz and Silicates

The essential prerequisites for a reagent that is to be used for the determination of free silica in the presence of silicates are that its action on free silica be slight and its action on silicates be rapid. To determine the behavior of fluoboric acid toward silica and silicates, samples of these materials ground to pass a 150-mesh sieve and caught on a 200-mesh sieve were treated with this acid according to the following procedures. The results of these experiments are given in Table I.

A 0.5-gram sample was weighed in a platinum crucible and treated with 5 cc. of fluoboric acid. The crucible was held at 50–55° C. in an open air bath for definite periods. At the end of each period, the residue was transferred to an ashless filter, washed acid free with hot water, ignited, and weighed. This procedure was repeated on the ignited residue until nearly constant weight was obtained.

The procedure of Knopf with fluosilicic acid was followed in determining the solvent action of fluoboric acid on quartz and silicates at room temperature.

At room temperature, quartz lost only 0.03 per cent per day in fluoboric acid as compared to a loss of 0.7 per cent per day for fluosilicic acid; while the silicates considered dissolved more readily in fluoboric than in fluosilicic acid. Fluoboric acid, unlike fluosilicic acid, may be used at higher temperatures without appreciable decomposition, thus hastening the solution of silicates.

The action of fluoboric acid on quartz is negligible at room temperature, but becomes appreciable at higher temperatures. This is probably due to the formation of hydrofluoric acid in the solution. If this is true, then some reagent that will remove hydrofluoric acid or fluoride ion from the solution should decrease the action of fluoboric acid on silica, and possibly on silicates.

Use of Trivalent Cations and Phosphoric Acid to Decrease Fluoride-Ion Concentration

A number of ions such as trivalent iron, aluminum, and chromium are known to form complexes of the type $(MF_6)^{---}$. All three of these ions were tried, and the aluminum was eliminated because of the formation of a gelatinous precipitate when a mixture of fluoboric and aluminum chloride was allowed to stand. The effectiveness of ferric and chromic ions was determined by experiments conducted with quartz and silicates in the following manner:

A 0.15- to 0.5-gram sample ground to pass a 150-mesh sieve and caught on a 200-mesh sieve was weighed in a platinum crucible. To this were added 5 cc. of fluoboric acid and 1 to 2 cc. of 2 *M* ferric chloride (or chromic sulfate). The crucible was heated at 50° C. for 12- and 24-hour periods. After each period, the residue was transferred to an ashless filter and washed with *N* hydrochloric acid, 0.5 *N* sodium carbonate, and hot water. The paper was burned and the residue ignited and weighed. The procedure was then repeated. The data for these determinations are given in Table II.

The use of ferric chloride reduced the decomposition of quartz from 1.06 to 0.20 per cent per day in one case, and to 0.12 per cent in another, while the rate of decomposition of the silicates was not affected. This confirms the idea that free hydrofluoric acid is the active constituent in the decomposition of quartz by fluoboric acid, while the fluoboric acid itself must be responsible for the decomposition of the silicate.

Table I. Action of Fluoboric Acid on Quartz and Silicates

Sample	Temperature	Time	Total Loss	
Gram	*° C.*	*Hours*	*Gram*	*%*
		On 150-Mesh Quartz		
0.5034	50–55	12	0.0029	0.57
		24	0.0049	0.98
			Av.	1.06 per day
		Days		
0.5020	ca. 20	3	0.0008	0.16
		20	0.0017	0.34
		25	0.0025	0.50
			Av.	0.03 per day
		On Silicates		
Talc[a]	ca. 20	5	0.0654	..
0.1038		10	0.0844	81.3
		Hours		
0.5089	50–55	12	0.2628	..
		24	0.4096	..
		36	0.4642	91.2
		Days		
Soda-lime feldspar	ca. 20	13	0.2464	..
0.5007		18	0.3837	..
		23	0.4746	..
		29	0.4801	95.9

[a] 200-mesh samples of talc were used.

Ferric chloride was slowly decolorized when the crucibles were heated. This may have been due to the formation of the colorless $(FeF_6)^{---}$ complex ion or to the formation of ferric fluoborate, about which very little is known. While chromic ion was as effective as ferric ion, it was more difficult to wash from the residue; consequently, use of it was abandoned.

Lange and Stein (*4*) state that phosphoric and hydrofluoric acids react to form monofluorophosphoric acid according to the following reversible reaction:

$$H_3PO_4 + HF \rightleftharpoons H_2PO_3F + H_2O$$

This suggested that phosphoric acid might be used in keeping the fluoride ion at a low concentration, which would decrease the action of fluoboric acid on quartz. The following experiments showed this to be the case.

A 0.15- to 0.2-gram sample of quartz ground to pass a 150-mesh and caught on a 200-mesh sieve was weighed in a platinum crucible. To this were added 5 cc. of fluoboric acid and 2 cc. of phosphoric acid having a specific gravity of 1.39. The crucible was heated at 50° C. for 48 hours, after which the residue was transferred to an ashless filter and washed with *N* hydrochloric acid, 0.5 *N* sodium carbonate, and hot water. The filter paper was burned off at a temperature as low as possible and the procedure repeated for 48 hours longer, after which the residue was washed, ignited, and weighed. This procedure was repeated for another 96-hour period. The data are given under sample A, Table III.

Table II. Action of Fluoboric Acid in the Presence of Trivalent Cations

Sample	Reagent	Time	Total Loss	Loss per Day
Gram		*Hours*	*Gram*	*%*
		On 150-Mesh Quartz		
0.4995	$FeCl_3$	12	0.0002	0.08
		24	0.0005	0.10
		36	0.0013	0.17
		76	0.0070	0.44
			Av.	0.20
0.1522	$FeCl_3$	24	−0.0001	−0.06
		48	0.0005	0.16
		72	0.0012	0.26
			Av.	0.12
0.1602	$Cr_2(SO_4)_3$	24	−0.0004	−0.25
		48	0.0007	0.22
		72	0.0018	0.38
			Av.	0.12
		On Silicates		Total Loss
				%
Talc.[a]	$FeCl_3$	12	0.1652	..
0.4975		24	0.2495	..
		64	0.3664	76.6
0.1649	$FeCl_3$	24	0.0860	..
		48	0.1156	..
		72	0.1447	..
		168	0.1594	96.6

[a] 200-mesh samples of talc were used.

Phosphoric acid was found to exert a retarding effect upon the decomposition of quartz in fluoboric acid, but this was not as effective as ferric chloride. If the retarding effects of these two reagents are additive, there should be an advantage in using them together. Most of the phosphates are soluble in strongly acid solutions, so there should be no objection to doing this. Since ferric phosphate is colorless and slightly dissociated, the color of the solution would indicate when the concentration of ferric ion was becoming small. The above procedure using 2 cc. of phosphoric acid and 2 to 4 cc. of 2 *M* ferric chloride was followed in studying this point. The data are given under samples B and C, Table III.

Table III. Action of Fluoboric Acid on 150-Mesh Quartz in the Presence of H_3PO_4 and $FeCl_3$

Sample	Reagents	Time	Total Loss	Loss per Day
Gram		*Hours*	*Gram*	*%*
A	H_3PO_4	96	0.0021	0.33
0.1593		192	0.0039	0.31
			Av.	0.32
B	H_3PO_4 and	96	0.0006	0.10
0.1530	$FeCl_3$	192	0.0014	0.10
		288	0.0016	0.09
C	H_3PO_4 and	96	0.0004	0.03
0.1748	$FeCl_3$	192	0.0009	0.06
		288	0.0015	0.07
			Av. of B and C	0.07

Later experiments have shown that 1 cc. of phosphoric acid having a specific gravity of 1.39 gives the best results in the above procedure. An excess of phosphoric acid should be avoided.

Procedure for Determination of Free Silica

The optimum conditions found in these preliminary experiments for the maximum decomposition of silicates and the minimum decomposition of quartz have been correlated in developing a new procedure for the determination of quartz in the presence of silicates. The complete directions for this method involve preparation of fluoboric acid, decomposition of the silicate, and determination of free silica.

Preparation of Fluoboric Acid. Dissolve 32 grams of purified boric acid in 75 cc. of pure 48 per cent hydrofluoric acid. Pour the hydrofluoric acid into a 125-cc. platinum dish and cool this in an ice bath. Keeping the dish in the ice bath, add the boric acid in small amounts, allowing each portion to dissolve before more is added. In this way the solution does not become overheated. When all the boric acid has been added (the last portion will not dissolve while the solution is cold), concentrate the solution to about 50 cc. on a steam bath. Cool to 0° to 5° and filter. The resulting acid is a slightly yellow, fuming, sirupy liquid that should have a specific gravity of about 1.45 and should analyze about 40 to 45 per cent HBF_4 by the Lange method. It should give no test for fluoride with calcium chloride or lead nitrate solutions. It must be stored in wax or rubber bottles, but the filtration may be done with glass apparatus.

Decomposition of Silicate. In a platinum crucible, weigh a 0.15- to 0.2-gram sample of material that has been ground to pass a 100-mesh sieve. To this add 5 cc. of fluoboric acid, 1 cc. of phosphoric acid, specific gravity 1.39, and 2 cc. of 2 *M* ferric chloride. Heat the crucible at 50° C. for 48 hours, adding more ferric chloride if the yellow color of the solution fades. Transfer the residue to an ashless filter and wash four times with *N* hydrochloric acid and five times with hot water. Unless the residue is negligible at this point, place paper and residue in the crucible and destroy the paper by heating the crucible only to dull redness. Repeat this treatment for 48 hours longer. Filter, wash, and determine the weight of the residue. Unless solution

Table IV. Determination of Correction Factor on 100-Mesh Quartz

Sample	Time	Total Loss	Loss per Day
Gram	*Days*	*Gram*	%
0.0260	4	0.0003	0.29
	8	0.0008	0.38
	12	0.0012	0.55[a]
0.0543	4	0.0008	0.37
	8	0.0016	0.37
	12	0.0024	0.37
0.1051	4	0.0021	0.50[a]
	8	0.0031	0.37
	12	0.0047	0.37
0.1543	4	0.0021	0.34
	8	0.0040	0.32
	12	0.0060	0.32
0.1501	4	0.0018	0.30
	8	0.0037	0.31
	12	0.0058	0.32
0.2544	4	0.0045	0.44[a]
	8	0.0065	0.32
	12	0.0100	0.33
		Av.	0.34

[a] These values were omitted from the average.

Table V. Analysis of Silicates

Silicate	Time	Silicate	Silica	Total
	Days	%	%	%
Wollastonite[a]	2	99.8	0.2	100.0
Biotite[b]	4	99.6	0.1	99.7
Orthoclase[a]	5	99.5	0.4	99.9
Albite[a]	6	97.2	1.1	98.3
Muscovite[b]	6	99.9	0.1	100.0
Pyroxene[a]	6	99.8	0.2	100.0
Andalusite[b]	6	99.3	0.1	99.4
Cordierite[b]	6	99.3	0.5	99.8
Talc[b]	6	99.3	0.5	99.8
Amphibole[a]	6	97.3	1.3	98.6
Zoisite[b]	8	94.1	5.6	99.7
			Decomposition	
			%	
Forsterite[b]	8		77.3	
Garnet[b]	12		69.4	
Dumortierite[b]	12		22.4	
Sillimanite[b]	8		21.9	
Beryl[b]	12		13.7	
Zircon[b]	8		8.8	

[a] Fluoboric acid, $HClO_4$, and $FeCl_3$ used.
[b] Fluoboric acid, H_3PO_4, and $FeCl_3$ used.

has been complete, repeat this treatment for 48-hour periods until a loss of only 1 to 2 mg. is found. This indicates complete solution of the silicate.

Some siliceous materials may be decomposed in less than 48 hours, in which case the treatment with fluoboric acid should be stopped as soon as complete decomposition is apparent. In other cases, even 8 to 12 days may not effect complete decomposition.

Determination of Free Silica. Treat the residue insoluble in fluoboric acid with 2 to 3 cc. of 48 per cent hydrofluoric acid, and repeat until constant weight is obtained after ignition. The loss in weight corresponds to the free silica content of the residue. This value must be corrected for the amount of free silica dissolved during the time required to decompose the silicate. The correction factor is 0.34 per cent per day.

When the residue is practically pure silica the treatment with hydrofluoric acid will give the correct value for quartz; if undecomposed silicates remain the loss with hydrofluoric acid will be too high, owing to attack of the silicates, but the authors obtained the correct result at least in the case of forsterite, as shown below. Data on other undecomposable silicates such as garnet and sillimanite are too meager to be included in this report.

Apparatus. For maintaining the crucibles at a constant temperature for long periods, a large vacuum desiccator was placed in an electric oven, the heating unit of which was controlled by a thermostat. An outlet tube was connected to a suction pump and a constant current of warm air to remove the fumes was drawn through the desiccator. The inlet tube was so arranged that a thermometer could be inserted into the desiccator to check the temperature without disturbing the apparatus.

The decomposition of quartz under these conditions is much less than in Knopf's method; but it is still large enough so that a correction factor must be applied. In the determination of this correction factor, the percentage loss due to the decomposition of quartz was found to be independent of the weight of the sample. This was ascertained by determining, by the above procedure, the decomposition of 0.025-, 0.05-, 0.01-, 0.15-, and 0.25-gram samples of pure quartz prepared as above. The data for these determinations are given in Table IV.

The scope of this method was studied by determining the rate of decomposition of a number of insoluble silicates. In order to subject the method to the most severe conditions, only those silicates which are not decomposed by mineral acids, other than hydrofluoric acid, were used. Pure crystals of talc, andalusite, zoisite, forsterite, cordierite, beryl, dumortierite, zircon, and sillimanite were obtained from Ward's Natural Science Establishment. The other silicate samples were furnished by John T. Sanford of the University of Rochester. The results of these determinations are given in Table V.

It may be seen from these data that the rate of decomposition of these silicates varies over a wide range. Garnet, sillimanite, zircon, beryl, forsterite, and dumortierite could not be completely decomposed; hence, this method is unsatisfactory for the precise determination of quartz in the presence of these silicates. On the other hand, eleven of the seventeen silicates were quantitatively decomposed as the fifth column of Table V shows. This means that quartz contained in mixtures of these silicates can be accurately estimated by this method.

In order to check the validity of this method, synthetic silicate-quartz mixtures have been analyzed. These mixtures were obtained by weighing in a platinum crucible a 0.15- to 0.2-gram sample of the silicate and then adding approximately 10 per cent of quartz. The results have been recorded in Table VI.

Table VI. Analysis of Silicate-Quartz Mixtures

Silicate	Weight of Silicate	Weight of Silica Added	Found	Difference
	Gram	*Gram*	*Gram*	*Gram*
Wollastonite	0.1644	0.0150	0.0148	0.0002
Biotite	0.1582	0.0103	0.0102	0.0001
	0.1546	0.0158	0.0158	0.0000
Orthoclase	0.1695	0.0164	0.0162	0.0002
Albite	0.1663	0.0221	0.0214	0.0007
Muscovite	0.1562	0.0178	0.0181	0.0003
Pyroxene	0.1507	0.0100	0.0109	0.0009
Andalusite	0.1536	0.0127	0.0126	0.0001
Cordierite	0.1605	0.0106	0.0103	0.0003
Talc	0.1535	0.0171	0.0162	0.0009
Amphibole	0.1577	0.0094	0.0102	0.0008
Forsterite	0.1523	0.0093	0.0094	0.0001

In eight of the twelve synthetic mixtures tested, the amount of free silica found varied only 0.1 to 0.3 mg. from the amount added. In the other mixtures wider deviations were observed, the largest deviation being only 0.9 mg. These values were obtained by correcting for the weight of silica dissolved during the treatment with fluoboric acid, and for the amount of free silica previously found in the silicate. Since the indeterminate errors would be about 1 per cent for samples containing about 10 per cent of free silica, this is the maximum precision that can be claimed for the method. The values obtained with the synthetic silicate-quartz mixtures substantiate this claim.

This method is an improvement on Knopf's procedure in the following ways: The correction factor is 0.34 per cent per day at 50° C. instead of 0.7 per cent per day at room temperature, fluoboric acid dissolves a variety of silicates more rapidly than does fluosilicic acid, and a greater number of more insoluble silicates can also be dissolved in fluoboric acid.

Quartz is the only form of silica which has been used in the synthetic mixtures. Such other forms as tridymite, cristabolite, and amorphous silica have not been considered.

Literature Cited

(1) Aradine, P. W., dissertation, University of Rochester, "The Determination of Free Silica in the Presence of Combined Silica" (1936).
(2) Knopf, A., *U. S. Pub. Health Repts.*, 48, 183–90 (1933).
(3) Lange, W., *Ber.*, 59, 2110 (1926).
(4) Lange, W., and Stein, G., *Ibid.*, 64B, 2772–83 (1931).
(5) Lincoln, F. C., and Rietz, H. L., *Econ. Geol.*, 8, 125 (1913).
(6) Mellor, J. W., "A Comprehensive Treatise on Inorganic and Theoretical Chemistry," Vol. V, p. 124, New York, Longmans, Green & Co., 1924.
(7) Ross, H. L., and Sehl, F. W., Ind. Eng. Chem., Anal. Ed., 7, 30–2 (1935).
(8) Shaw, A., *Analyst*, 59, 446–61 (1934).
(9) Travers, A., and Malaprade, L., *Bull. soc. chim.*, 47, 788–801 (1930).

Received August 10, 1936.

Examination of Rubber Latex and Latex Compounds

Part II. Chemical Testing Methods

D. E. FOWLER, Naugatuck Chemical, Division of United States Rubber Products, Inc., Naugatuck, Conn.

Methods of determining total solids, dry rubber content, ammonia, fixed alkali, hexamethylenetetramine, water-solubles, acetone extract, free sulfur, total and combined sulfur, copper, manganese, starch, sediment, and coagulum in rubber latex or latex compounds are described.

LATEX compounds are purchased either on the basis of total solids content or the so-called dry rubber content. The total solids probably furnish a more reliable basis of evaluation, as the determination can be made with a high degree of accuracy. The dry rubber content is not a precise determination, as the proteins, fatty acids, and other non-rubber constituents are included, and in the case of compounded latices some of the compounding materials are included in the value and some are not. Hauser (*8*) and Noble (*9*) include in their books useful chapters on testing latex.

Total Solids

The total solids are determined by weighing about 2 grams of the sample in a low covered weighing dish about 6.25 cm. (2.5 inches) in diameter on an analytical balance. A metal weighing dish is preferred for more rapid drying. Tinned 60-ml. (2-ounce) ointment cans are satisfactory and so inexpensive that they may be thrown away if they are at all difficult to clean. The sample is dried, preferably in a vacuum oven. The temperature may be increased to 120° C. in a vacuum without any apparent oxidation or deterioration of the rubber. A sample of normal latex may be completely dried in about 10 minutes if the drying arrangement is right. Results are accurate to better than 0.1 per cent.

Methods involving the use of specific gravity are worse than useless when applied to preserved latex as a concentration control. Even in the case of unpreserved, unwatered normal latex on the plantations, the hydrometers must be calibrated especially for the latex from the estate on which they are to be used.

Dry Rubber Content

A number of official methods for determining the dry rubber content have been described. Usually the diluted latex is coagulated with acetic acid and the coagulum dried. The various official methods usually differ only in minor details. The method as prescribed by the Customs of the Commonwealth of Australia (*4*) for evaluating latex for tariff purposes is as follows:

> Place a weighed quantity of latex (approximately 10 grams) in a porcelain or glass basin of about 200-ml. capacity. Add gradually, with constant stirring, a 1 per cent solution of acetic acid until the latex appears to be completely coagulated and the addition of more acid produces no apparent effect. Manipulate coagulum with stirrer until all particles are collected in one mass.
>
> Place basin on a steam bath for 30 minutes; pour off and wash coagulum with water.
>
> Remove coagulum from basin and pass it several times through rollers to squeeze out serum. Wash the thin rubber with water and finally dry it at 100° C. until the rubber no longer loses weight. The percentage of dry rubber so found shall be the crude rubber content of the latex tested.

The relationship between the acetic acid rubber (dry rubber content) and solids for unwatered normal latex is roughly

$$\text{Acetic acid rubber} + 2.3 = \text{total solids}$$

Determination of Ammonia

If ammonia alone has been added to latex, it is usually satisfactory to titrate directly with standard acid, using methyl red as indicator.

> Weigh about 10 grams to the nearest centigram in a 400-cc. rubber-extraction flask. Add about 200 cc. of water, a few drops of methyl red indicator, and titrate with 0.588 *N* acid, being careful to keep the solution well agitated throughout the determination. The volume of acid used divided by the weight of sample will give the percentage of ammonia. If only occasional tests are required, 0.5 *N* or 0.1 *N* acid may be used. The presence of hexamethylenetetramine does not interfere to any appreciable extent.
>
> If other alkaline materials, such as sodium or potassium hydroxide, borax, or sodium silicate, are present in addition to the ammonia, the ammonia may be distilled over into standard acid and titrated.
>
> Weigh about 5 grams of the sample from a weighing pipet into an 800-cc. Kjeldahl flask containing about 250 cc. of distilled water. Distill over about 200 cc. into an excess of 0.1 *N* sulfuric acid. Back-titrate the excess of standard acid with 0.1 *N* sodium hydroxide using methyl red as indicator.

$$\frac{(\text{cc. of acid} \times \text{normality factor} - \text{cc. of base} \times \text{normality factor}) \times 1.7}{\text{weight of sample}} = \%\ NH_3$$

In compounds which contain no fixed alkali, the distillation method will give only the free ammonia. Ammonium soaps

are also included if a little sodium hydroxide is added before the distillation. One cubic centimeter of normal caustic will take care of all the ammonium soaps which are normally present in latex.

In the presence of the alkaline materials mentioned above, total ammonia may be determined by coagulating the latex and nesslerizing the clear serum. The method in detail is as follows:

Nessler Reagent. Dissolve 25 grams of potassium iodide in 20 cc. of distilled water. Add saturated mercuric chloride solution until a slight precipitate appears. Add 200 cc. of clear 36 per cent sodium hydroxide solution. Dilute to 500 cc., let stand one day or longer, filter through asbestos in a Gooch crucible, and place in a dark bottle. After about 24 hours the small amount of precipitate will have settled and the solution will be clear.

Standard Ammonia Solution. Dissolve 0.4176 gram of ammonium oxalate, $(NH_4)_2C_2O_4 \cdot H_2O$, in distilled water and make up to 1000 cc. Pipet out 20-cc. aliquot and make up to 1000 cc. This solution contains 2 mg. of NH_3 per liter.

Method. Weigh about 10 grams of the latex from a weighing pipet into a 1000-cc. volumetric flask containing about 950 cc. of water. Shake and add a dilute solution of acetic acid, a few drops at a time, shaking thoroughly between additions until the latex is coagulated. Make the volume up to the mark, mix thoroughly, and filter a portion of the serum, rejecting the first 10 to 20 cc. which do not always come through clear.

In some cases, especially with latex compounds containing pigments, antioxidants, etc., it is necessary to refilter the solution with the aid of a little Celite in order to remove opalescence. The final solution should be perfectly clear and colorless.

Measure an aliquot of this clear filtrate into a 500-cc. volumetric flask and make up to the mark with distilled water. The size of the aliquot depends on the ammonia content of the sample. A 100-cc. aliquot is used when the ammonia content is expected to be about 0.1 per cent and proportionally smaller amounts for higher percentages.

After the aliquot has been made up to 500 cc., measure 25 cc. of this diluted solution in a graduated cylinder, and treat with 1 cc. of Nessler reagent added from a pipet. Compare the color in a colorimeter with that obtained from 25 cc. of the dilute standard ammonium oxalate solution obtained in the same way. Either the distillation or nesslerization method may be applied to black or colored compounds. The color is all carried down with the rubber on coagulation.

Fixed Alkali. The amount of fixed alkali present may be estimated from the difference between the total alkalinity by direct titration and the ammonia as determined either by distillation or nesslerization.

Hexamethylenetetramine

Hexamethylenetetramine is frequently present in latex compounds. Its presence is of very little importance in most cases, as it is water-soluble and is usually removed from the finished product in the serum or by washing. It may be detected, however, by diluting the latex considerably, adding acid to coagulate and about 25 cc. of normal acid in excess, distilling off some of the water, and testing the distillate with fuchsin sulfite solution. A red or purple coloration indicates hexamethylenetetramine.

The fuchsin sulfite reagent is prepared by dissolving 0.5 gram of fuchsin and 9 grams of sodium bisulfite in 500 cc. of distilled water. Ten cubic centimeters of concentrated hydrochloric acid are added and the solution is kept well stoppered and away from light.

Hexamethylenetetramine may be determined quantitatively as follows:

Dilute the residue from the ammonia determination by distillation to about 250 cc. with water and add 25 cc. of normal acid from a buret. Boil the flask for about 5 minutes, cool, and add 26 cc. of normal caustic. Distill the ammonia into standard acid and titrate exactly as described in the ammonia by distillation method above. One cubic centimeter of normal acid is equivalent to 0.035 gram of hexamethylenetetramine.

Determination of Water-Solubles

The amount of water-solubles in latex cannot be easily and completely leached from a latex film by merely boiling with water or extracting with water as is done in the case of the acetone extract. Using such methods, the extraction is very likely to be incomplete and the results will depend on the amount of surface of the sample extracted.

The water-solubles may be removed from the uncoagulated sample by dialyzing through a parchment membrane with distilled water, but the determination is slow, a week or more being required to remove all the extractable materials. A coagulation method which has proved very satisfactory consists of boiling off the ammonia, diluting considerably, then coagulating by adjusting to the isoelectric point of the protective proteins with a known amount of acid, evaporating an aliquot of the serum, weighing, and correcting for the acid added. The method in detail is as follows:

Weigh about 5 grams of the sample accurately to a centigram in a 400-cc. beaker, add about 200 cc. of water at once, cover with a watch glass, and boil on a hot plate until the volume has been decreased considerably.

Transfer to a 200-cc. volumetric phosphoric acid flask (this type of flask has a wide neck and is easily cleaned), and make up to within about 10 cc. of the mark, add 1 cc. of a 0.1 per cent methyl orange indicator solution, and add N sulfuric acid from a buret until the red-orange color, indicating a pH of about 4.3, is obtained, and the rubber is well coagulated. Care must be taken not to add too much acid, as the sample will not coagulate so well at a lower pH. Shake well to complete coagulation and make up to the mark.

Filter and pipet 100 cc. of the clear serum into a weighed evaporating dish. Evaporate to dryness on a steam bath, dry in an air oven at 70° C., cool, and weigh.

Normal latex has water-solubles of about 8.5 per cent and centrifuged or creamed latices have water-solubles of about 2.6 per cent of the total solids.

$$E = \left\{ \frac{W\left(200 - \frac{S\,T\,R}{10{,}000\,D}\right)}{100} (-0.0049\,A + I) \right\} \frac{10{,}000}{S\,T}$$

E = per cent of water extract
W = weight of dry material in 100-cc. aliquot
T = per cent of total solids
R = percentage of rubber expected in the solids of the sample, for normal latex 92 per cent, for creamed latex 97 per cent, etc.
D = density of rubber (about 0.92)
A = volume of 0.1 N sulfuric acid used
I = weight of indicator used, in grams
S = weight of sample

Acetone Extract

The acetone extract is not of very much value as a control test for consignments of raw latex, but may be of great assistance in examining samples of unknown composition, particularly compounded samples, and is a necessary part of the usual method of determining free or combined sulfur.

The film should be laid down by pouring some of the latex into a shallow glass tray, which is easily prepared from a pane of window glass and some glass rods or tubing. The glass rod is cut to fit around the edge of the plate and is stuck on with paraffin wax. The edges of the plate are then dipped in molten paraffin wax, thus making a ridge of wax supported by the rods all around the glass plate. The film should be thin and dried at room temperature until it is clear. An electric fan blown over the film hastens drying considerably. The film is then sheeted out as thin as possible on a cold roll but not broken down.

The prepared film is cut in narrow strips and 1 gram is weighed in an extraction thimble and extracted for 16 hours, according to the method and using the apparatus recommended by the committee on Methods of Analysis of the Rubber Division of the American Chemical Society for rubber goods (*2*). Part of the acetone may be removed by boiling on a hot plate or steam bath, but great care must be

observed and the flask must not go dry. It is possible to scorch the extract on a hot plate with as much as 10 cc. of acetone remaining in the flask, and if the sample goes dry on a steam bath appreciable amounts of free sulfur may be lost. It is best to stand the flasks in a bath of warm water, 40° to 70° C., remove the acetone by gently blowing air into the flask until it is dry, and finally dry in an air oven at 70° C.

The time of extraction of 16 hours is empirical. The greater part of the extract is removed in this time, but some less easily soluble materials will not be entirely removed if the extraction is continued for several days. The thickness of the film also has some bearing on the quantity of extract removed, as has the rate of boiling.

Free Sulfur

Free sulfur is usually determined on the acetone extract of the film. The bromine method (*2*) is most commonly used and is satisfactory, except that the results generally contain some if not all of the sulfur of the accelerator and may be rather confusing. The method of Bolotnokov and Gurova (*5*), in which the rubber film is heated with a solution of sodium sulfite, the excess of sulfite destroyed with formaldehyde, and the thiosulfate which was formed titrated with iodine, is very convenient, but some accelerators interfere. This method was modified by Oldham, Baker, and Craytor (*10*) to prevent interference by mercaptobenzothiazole and is satisfactory in most cases, but tetramethylthiuram disulfide will give high results.

The method has been further modified in the author's laboratory to make it possible to run sulfur on the uncoagulated latex.

Weigh about 10 grams of the latex compound into a 400-cc. rubber-extraction flask and add 100 cc. of a 5 per cent sodium sulfite solution. Bring to the boiling point and boil gently for 5 minutes on a hot plate. Care must be taken to avoid vigorous boiling or the mixture will froth over the neck of the flask. Remove the flask from the hot plate and add 100 cc. of a 0.5 per cent strontium chloride solution and 4 cc. of glacial acetic acid. Stir until the rubber is coagulated. Remove the lump of rubber, washing it with a jet of water and squeezing it with the fingers to express as much of the liquid as possible.

To the solution add 6 cc. of 37 per cent formaldehyde, then a few drops of phenolphthalein and sufficient sodium hydroxide to turn the indicator pink. Add normal acid until the pink color completely disappears but avoid any considerable excess. Let the mixture stand about 10 minutes, then filter it, receiving the filtrate in a 1000-cc. flask. Wash the filter paper twice with a jet of hot water. Acidify the filtrate with 10 cc. of glacial acetic acid, add cracked ice to bring the temperature below 15° C. and the volume to about 600 cc., and titrate with 0.1 *N* iodine, using about 5 cc. of a 3 per cent starch solution as indicator.

1 cc. of 0.1 *N* iodine = 0.003206 gram of sulfur

Sulfur-bearing accelerators, such as mercaptobenzothiazole, xanthates, carbamates, and thiuram monosulfides, do not interfere with the determination but tetramethylthiuram disulfide is dissolved and one-fourth of its sulfur is titrated.

The above method gives the true free sulfur of the sample. The sulfur is in a fine state of division and is reacted on by the sodium sulfite almost immediately, and all chance of loss of free sulfur because of vulcanization during the determination is eliminated. When the other methods are used there is always a chance that the rubber has cured up somewhat and part of the sulfur has combined while the film was being dried or extracted.

Total Sulfur

The Parr sulfur bomb method (*11*) and the nitric acid–bromine method (*2*) are both satisfactory. The author has, however, found the perchloric acid (*12*) method more convenient, rapid, and highly dependable. The perchloric acid method may be carried out as follows:

To a 1-gram sample of the latex film in a 250-cc. rubber-extraction flask add 20 cc. of a nitric acid solution 1 to 1 and warm on an electric hot plate for 1 or 2 minutes until brown fumes appear and the reaction has subsided. Then add 10 cc. of concentrated nitric acid and continue heating for about 15 minutes or until the rubber is nearly entirely dissolved. Add 10 cc. of a 60 per cent solution of perchloric acid and heat until dense white fumes appear and the solution (in the absence of insoluble inorganic compounds) is clear and colorless. Allow to cool somewhat and slowly add 5 cc. of concentrated hydrochloric acid, once more heat until white fumes appear, cool, and wash into a 250-cc. beaker. If the solution is not perfectly clear and free from sediment it should be filtered. Dilute with distilled water to about 200 cc., precipitate the sulfur as barium sulfate in the usual manner, and weigh. If the sample contains free carbon, the free carbon need not be completely oxidized and may be filtered off after diluting. If an insoluble inorganic material is found and the presence of barium sulfate is suspected, this should be filtered off, dried, fused with sodium carbonate, and examined for sulfates.

Combined Sulfur

The sulfur which is left in the rubber sample after extraction with acetone is usually considered as the combined sulfur. It may be determined directly on the extracted sample by the perchloric acid method described for total sulfur or may be computed as the difference between the total and free sulfur.

Combined sulfur is valued as a measure of the degree of vulcanization of a rubber stock and is frequently considered as a measure of the sulfur which has actually combined with the rubber. In most stocks, however, this is only partly true, for the combined sulfur figure would include sulfur which had been changed into or added as sulfides or other inorganic sulfur compounds. A very careful consideration of the compound and method must be made in interpreting combined sulfur values.

The T-50 test, described in a previous paper (*6*) is a reliable measure of state of cure and may be correlated with the true combined sulfur value of any latex compound that can be stretched considerably.

Copper

The determination of copper and manganese in latex and compounding materials should be made occasionally. Traces of both of these elements are troublesome and cause poor aging, but quantities of either element up to 0.0015 per cent will do no harm.

Sodium dimethyldithiocarbamate is a very satisfactory reagent for determining copper. It is very sensitive and if the details listed below are followed, iron and other usually occurring elements do not interfere.

Weigh about 10 grams of the dry film into a 150-cc. beaker, and ignite in a muffle at about 400° C. to a white ash. Cool and take up the ash with about 1 cc. of hydrochloric acid and a drop of concentrated nitric acid. Evaporate to dryness on a water bath and take up with distilled water.

Treat the aqueous solution with 2 grams of citric acid and a drop of phenolphthalein, and add ammonia until a red color is produced. To this solution add 10 cc. of a 0.1 per cent aqueous solution of sodium dimethyldithiocarbamate, and extract the brown solution with successive small portions of carbon tetrachloride until the extract is only faintly yellow.

After the copper has been extracted add 1 cc. of the standard copper solution (1 cc. = 0.0001 gram of copper) to the extracted liquid, and extract the color thus produced with carbon tetrachloride, the extract being used as the comparison standard.

A blank determination on all materials must be run in exactly the same way as the sample.

The color of the extract from the sample is compared with the standard in Nessler tubes or a colorimeter, and the amount of copper estimated. The blank is also compared with the standard, the copper in the blank subtracted from the copper found in the sample, and the difference reported as per cent of copper on the original latex solids.

After the color has been developed and extracted, it is important that the solution not be left for a long time before comparison is made, as the color fades slowly.

Sodium diethyldithiocarbamate (*7*) may be used equally well.

Manganese

The periodate method for manganese has given more reliable results in the author's laboratory than either the persulfate or bismuthate methods.

Weigh about 10 grams of the latex film into a large porcelain crucible and ash in a muffle furnace at as low a temperature as possible.

Add 5 to 15 grams of potassium bisulfate to the ash (depending on how much ash is present) and fuse cautiously until effervescence ceases, then put into the muffle at moderately low red heat, and fuse until the carbon particles are burned off.

Cool, dissolve in 80 cc. of 5 per cent sulfuric acid, filter if necessary, add 5 cc. of 85 per cent H_3PO_4, and 0.5 gram of periodic acid, and heat until the color appears, boiling 15 minutes thereafter. Cool, dilute to 100 cc. in a volumetric flask, and compare with a standard in a colorimeter or Nessler tubes.

The standard solution is prepared by diluting carefully standardized 0.05 *N* potassium permanganate to such a volume as to contain 0.02 mg. of manganese per cc. with distilled water which has been slightly acidified with sulfuric acid, boiled with a little periodic acid, and then cooled.

Starch

Starch may be detected in latex compounds by acidifying with hydrochloric acid and then adding a solution of iodine in potassium iodide. A blue or black coloration indicates starch.

Starch may be quantitatively determined by the following procedure:

Weigh 15 grams of the sample into a 500-cc. Erlenmeyer flask fitted with a glass condenser tube. Add 100 cc. of distilled water and 4 cc. of *N* sodium hydroxide and heat the mixture on a water bath, with air being blown over the surface until the ammonia is removed. Then cool the mixture and add water to replace any that may have evaporated. Add 20 cc. of concentrated hydrochloric acid rapidly while swirling the flask. This prevents the latex from coagulating to a solid mass. Add 40 cc. of 95 per cent alcohol and 60 cc. of benzene, attach the flask to the condenser, and allow to reflux at gentle heat for 2 hours. Refluxing for longer periods was found to give lower results.

Remove the condenser and evaporate the benzene and alcohol by blowing air over the surface of the mixture on a steam bath. Decant the clear water layer, wash the rubber residue several times with hot water, and combine the washings with the extract. Add 10 per cent potassium hydroxide solution to bring to neutrality and then bring just on the acid side with hydrochloric acid. Evaporate to a smaller volume if necessary, and make up to volume in a volumetric flask of such a capacity that a 25-cc. aliquot will yield between 15 and 500 mg. of cuprous oxide on oxidation. A precipitate of about 100 mg. of cuprous oxide is most conveniently handled. Direct boiling of the solution containing the sugar over an open flame is to be avoided, as this decomposes some of the sugar and causes low results.

The dextrose in the extract is determined by Allihn's gravimetric method as follows:

Reagent. Allihn's modification of Fehling's solution, prepared by mixing, immediately before use, equal volumes of (a) and (b).

(a) Copper sulfate solution: Dissolve 34,639 grams of copper sulfate ($CuSO_4 \cdot 5H_2O$) in water and dilute to 500 cc.

(b) Alkaline tartrate solution: Dissolve 173 grams of Rochelle salt and 125 grams of potassium hydroxide in water and dilute to 500 cc.

Determination. Place 30 cc. of the copper sulfate solution, 30 cc. of the alkaline tartrate solution, and 60 cc. of water in a 250-cc. beaker, cover with a watch glass, and heat to boiling. From a pipet add 25 cc. of the material to be examined, and boil for exactly two minutes, keeping the beaker covered. Filter immediately through an asbestos Gooch, wash thoroughly with water at 60° C., once with acetone, and dry at 100° C. for 30 minutes.

The weight of dextrose corresponding to the weight of cuprous oxide may be obtained by referring to Allihn's sugar table (*1*, *3*). The factor for converting dextrose to starch is 0.90. The weight of cuprous oxide may be converted to weight of dextrose or starch by multiplying by a factor, which varies with the weight of cuprous oxide and may be found by interpolating in Table I.

Table I. Factor for Converting Cuprous Oxide to Dextrose or Starch by Allihn Method

Cu_2O Weighed	Dextrose per Mg. of Cu_2O	Starch per Mg. of Cu_2O	Cu_2O Weighed	Dextrose per Mg. of Cu_2O	Starch per Mg. of Cu_2O
Mg.	*Mg.*	*Mg.*	*Mg.*	*Mg.*	*Mg.*
15	0.520	0.468	150	0.452	0.407
20	0.493	0.443	200	0.454	0.409
40	0.467	0.420	300	0.457	0.411
60	0.459	0.413	400	0.468	0.421
80	0.455	0.410	500	0.478	0.430
100	0.453	0.408			

Sediment and Sludge

Fill a 15-cc. centrifuge tube to the mark with the sample, stopper, and centrifuge. Decant the latex off, fill the tube with a 2 per cent solution of sodium oleate, shake up the sediment, and centrifuge again. Repeat until the sediment has been washed free from latex. Transfer the sediment to a weighed Gooch crucible, wash with water, dry, and weigh.

Results by methods which depend on measuring the volume of the sediment are not reliable, as they are too dependent on the time and speed of centrifuging as well as the physical nature of the sediment.

Determination of Coagulum

Measure or weigh about 100 cc. of the sample and dilute with a 2 per cent sodium oleate solution until it has the consistency of normal latex. Cut a circular piece of 80-mesh wire screen cloth of such a size that it will fit inside a 5-cm. (2-inch) ordinary pipe union. Weigh and place tightly in the union and press down in the middle so that the upper surface will be concave. Clamp the pipe union in a vertical position. Pour the latex through the screen and wash with a 2 per cent sodium oleate solution and finally with water. Remove the screen, dry, and weigh. If a large amount of coagulum is expected a smaller sample should be used.

Literature Cited

(1) Allihn, F., *Z. Ver. Ruebenzucker-Ind.*, **1882**, 32.
(2) Am. Chem. Soc., Rubber Division, Committee on Methods of Analysis, J. Ind. Eng. Chem., **14**, 561 (1922).
(3) Assoc. Official Agr. Chem., Methods of Analysis, 2nd. ed., pp. 454–7 (1924).
(4) Australia Customs Tariff Proposals, Tariff Item No. 331D (Nov. 28, 1935).
(5) Bolotnokov, V., and Gurova, V., *J. Rubber Ind.* (*U. S. S. R.*) **10**, 61–3 (1933); *Rubber Chem. Tech.*, **8**, 87, 1935.
(6) Gibbons, W. A., Gerke, R. H., and Tingey, H. C., Ind. Eng. Chem., Anal. Ed., **5**, 299 (1933).
(7) Haddock, L. A., and Evers, N., *Analyst*, **57**, 495–7 (1932).
(8) Hauser, "Latex," Chapter 4, N. Y. Chemical Catalog Co., 1930.
(9) Noble, "Latex in Industry," Chapter 10, New York, The Rubber Age, 1936.
(10) Oldham, E. W., Baker, L. M., and Craytor, M. W., Ind. Eng. Chem., Anal. Ed., **8**, 41–2 (1936).
(11) Parr, S. W., J. Ind. Eng. Chem., **11**, 230 (1919).
(12) Wolesensky, E., *Ibid.*, **20**, 1234 (1928).

Received September 18, 1936. Presented before the Division of Rubber Chemistry at the 92nd Meeting of the American Chemical Society, Pittsburgh, Pa., September 7 to 11, 1936.

Determination of Iron

Colorimetric *o*-Phenanthroline Method

L. G. SAYWELL[1] AND B. B. CUNNINGHAM
College of Agriculture, University of California, Berkeley, Calif.

IN THE determination of the iron content of various fruit products and materials utilized in their production, two methods have been used previously by the authors. With dried fruits (*5*) a dry-ashing was followed by a determination of the iron using the colorimetric thiocyanate method of Stugart (*6*). In early studies on fruit juices and wines (*4*) essentially the colorimetric mercaptoacetic acid method of Lyons (*3*) and Leavell and Ellis (*2*), with sulfuric and perchloric acid wet-ashing, was used. The latter methods were also used in a study of certain filter aids and asbestos filtering products.

The dry-ashing and Stugart procedure require considerable time, so that where several hundred determinations are to be made, a more rapid and simple, yet accurate, method is desirable. For over 2 years an adaptation of the wet-ashing method of Leavell and Ellis has been successfully employed with the usual ashing times of 3 to 7 hours for wines and many fruit juices reduced to periods of 2 to 10 minutes for each sample.

Because of the difficulty in color comparison with concentrations lower than 2 or 3 parts per million (p. p. m.) and the occasional fading of the mercaptoacetic acid colored complex, it appeared desirable to have a method of equal or greater sensitivity and accuracy, with a higher degree of precision.

Experimental

It has been pointed out by Walden, Hammett, and Chapman (*7*) that the ferrous *o*-phenanthroline complex ion discovered by Blau (*1*) may be used as a reversible oxidation indicator of high potential. The ferrous complex gives an intense red color.

The authors have observed that the color, when once formed in slightly acid to neutral solutions, is very stable and standards have been kept for over 4 months without exhibiting differences from freshly prepared standards. Solutions containing a final iron concentration of 1 to 10,000,000 give color of sufficient intensity for colorimetric comparison. For iron concentrations of the same magnitude, the intensity of the color is proportional to the iron content. Concentrations of greater than 20 or 25 p. p. m. may be conveniently diluted by one-half, or smaller samples may be taken for analysis.

As the iron in the strongly acid solution remaining from the wet-ashing is in the ferric condition, reduction to the ferrous condition before the addition of the *o*-phenanthroline is necessary. Several reducing agents were studied, the best being sodium hypophosphite or hypophosphorous acid, and sodium formate, which were discontinued because of the considerable iron content of these products and the necessary correction therefor. The use of a concentrated solution of iron-free hydroxylamine hydrochloride has been adopted.

Numerous experiments were made to ascertain the most satisfactory procedure and conditions for the addition of the reagents. As a result it was observed that a treatment of the warm acid solution (remaining from the wet-ashing) with hydroxylamine, followed by the addition of *o*-phenanthroline and neutralization with concentrated ammonium hydroxide, using Congo red indicator paper, gave a quantitative development of the color due to the formation of ferrous *o*-phenanthroline complex. An excess of one or two drops of ammonium hydroxide is permissible.

Pyrex test tubes, 25 × 150 mm., are calibrated to contain 10 and 15 ml. Using such tubes the entire procedure of wet-ashing, development of color, and dilution may be carried out in the same tube without possible error of transfer and at a considerable saving of time. Iron-free concentrated sulfuric acid, 60 or 70 per cent perchloric acid, 10 per cent aqueous hydroxylamine hydrochloride solution, 1.5 per cent solution of *o*-phenanthroline in ethyl alcohol, and concentrated ammonium hydroxide are required. Congo red paper also is used.

A primary standard iron solution is prepared (*2*) by dissolving 1 gram of pure iron wire in dilute sulfuric acid and concentrated nitric acid. Oxides of nitrogen should be expelled by boiling to fumes of sulfur trioxide. The solution is then diluted to 1 liter. Other standard solutions may be prepared by diluting 20, 10, and 5 ml. of the primary standard to 1 liter each, these standards containing 20, 10, and 5 p. p. m. of iron, respectively. Further standards may be prepared as desired. All standards should be made acid with sulfuric acid.

Procedure

Samples of 2 ml. of a fruit juice or wine are digested with 1 ml. of concentrated sulfuric acid and 0.7 to 1 ml. of 60 to 70 per cent perchloric acid in the Pyrex test tubes over a free flame. It is convenient to hold the tube in a wire clamp and agitate contents vigorously during the heating, thereby greatly increasing the rate of heating and digesting. Digestion to a clear water-white liquid will occur ordinarily in 2 to 10 minutes. If combustion is not complete in this time an additional 0.5 to 1 ml. of perchloric acid should be used and digestion continued. When digestion is completed, 1 ml. of distilled water is added. This is followed by the addition of 1 ml. of the 10 per cent hydroxylamine hydrochloride solution, shaking, and the addition of 0.5 ml. of the 1.5 per cent *o*-phenanthroline solution. Concentrated ammonium hydroxide (about 2 ml.) is added until a light red or pink color develops, a small piece of Congo red indicator is dropped into the solution, and the addition of the ammonium hydroxide is continued until the Congo red paper is distinctly pink. In the meantime the full color of the ferrous *o*-phenanthroline complex will have developed. The solution is then diluted with distilled water to the graduation mark on the test tube indicating a volume of 10 ml. and thoroughly mixed. If the color intensity of this solution is greater than that of the highest standard available, the unknown solution may be diluted to the 15-ml. graduation mark and appropriate calculation made. Determinations may conveniently be made on a series of samples, and the reagents added consecutively from measuring pipets or burets.

Standards should be prepared by the same procedure. A blank determination on the distilled water and reagents used should also be made. For purposes of comparison with a colorimeter, standards containing 2.5, 5.0, 7.5, 10, and 15 p. p. m., respectively, have been convenient. For routine plant purposes where many determinations are being made, much time may be saved by having permanent standards of 1, 2, 4, 6, 8, 10, 12, and 15 p. p. m., respectively, in a rack so that it is only necessary to compare the solutions in two similar tubes. The iron content can be easily estimated to within 1 p. p. m. or better in this manner. For materials

[1] Present address, Pacific Can Company, San Francisco, Calif.

such as dried fruits, in which the iron content may be up to 40 to 60 p. p. m., it is desirable to weigh out a small sample of approximately 0.5 gram on a small piece of wax paper and ash the entire sample. One also may weigh out a larger sample, prepare a water solution or suspension of it, and use a suitable aliquot for ashing. In general, the authors have used original concentrations of up to 20 p. p. m. with a total of 0.04 mg. of iron present in each determination. Volumetric flasks and long tubes of small diameter for color comparison may also be used.

Examination of the possible interfering effect of copper, aluminum, and magnesium upon the test was made. To standards containing 10 p. p. m. of iron the corresponding metal salts were added to give concentrations of copper, aluminum, and magnesium up to 20, 100, and 100 p. p. m., respectively. These relative concentrations are greater than those usually found in the products analyzed. No interference was observed, though it was necessary to make the determinations with aluminum again acid to Congo red paper and reheat the solution to obtain a clear solution, for color comparison.

Standards were prepared containing 5, 10, 15, and 20 p. p. m. of iron, respectively, and the 10 p. p. m. standard was used for comparing the iron content of the others. Similar series and observations were made by each of three analysts. The results are tabulated in Table I. The numbers with three figures are calculated from the arithmetical average of colorimetric readings.

Similar series of standards of 2.5, 5.0, 7.5, 10.0, and 15.0 p. p. m. were prepared by the same three analysts, the series by the second and third analysts being compared by them with that of the first. These data are given in Table II. The numbers with three figures are calculated from the arithmetical average of colorimetric readings.

To two wines containing 3.8 and 2.9 p. p. m. of iron, respectively, were added 2.5 and 5.0 p. p. m. of iron. The results of the duplicate determinations are given in Table III.

A group of four wines of varying sugar and alcohol contents was taken for duplicate analysis by each of four analysts. The data are presented in Table IV.

Another group of six wines was analyzed in duplicate for iron by the mercaptoacetic acid, Stugart (*6*), and *o*-phenanthroline methods. The data are given in Table V.

The *o*-phenanthroline method has been found to have a considerable range of applicability and has been applied to fruit juices, wines, and vinegars. Comparative tests on apple and grape juices and vinegar, using the mercaptoacetic acid and *o*-phenanthroline methods, parallel those on wines reported in Table V. In general, the variations between duplicate determinations with the mercaptoacetic acid method tend to be greater than with the *o*-phenanthroline method. Three samples of prunes on which the iron had previously been determined by the Stugart method (*6*) and having 39, 28, and 42 p. p. m. of iron, respectively, were also analyzed by the *o*-phenanthroline method; these analyses indicated iron contents of 35, 30, and 40 p. p. m., respectively.

Two samples of cellulose-asbestos filtering pads which had been analyzed for total iron by the mercaptoacetic acid method, using a concentrated hydrochloric acid extract, were also analyzed for iron, using a direct wet-ashing of a 0.020-gram sample of each, followed by the *o*-phenanthroline procedure. The iron contents by the mercaptoacetic acid procedure were 0.09 and 0.30 per cent, respectively, and by the *o*-phenanthroline method 0.11 and 0.31 per cent, respectively. Comparisons of the tartaric acid–soluble iron of diatomaceous silica filter aids (*4*) were also made by the two methods, with results comparable to those obtained for the cellulose-asbestos filtering pads.

The iron contents of several well waters used in wineries has been determined by the *o*-phenanthroline method, a 5- or 10-ml. sample of the water being wet-ashed. For three representative waters the iron contents were 0.3, 0.4, and 0.3 p. p. m., respectively.

Table I. Comparison of Iron Standards of Different Concentrations

Analyst	Standard			
	5 p. p. m.	10 p. p. m.	15 p. p. m.	20 p. p. m.
A	5.02	10	15.1	19.5
B	5.06	10	14.8	19.7
C	4.95	10	14.7	19.0

Table II. Comparison of Iron Standards of Equal Concentration

Analyst	Standard				
	2.5 p. p. m.	5.0 p. p. m.	7.5 p. p. m.	10 p. p. m.	15 p. p.m.
A	2.5	5.0	7.5	10.0	15.0
B	2.52	4.93	7.63	9.95	14.8
C	2.58	5.10	7.57	9.97	15.1

Table III. Recovery of Added Iron

	Iron Recovered			
	Sauterne		Claret	
	P. p. m.	*P. p. m.*	*P. p. m.*	*P. p. m.*
Original wine	3.8	3.8	2.9	2.9
Original + 2.5 p. p. m.	6.3	6.3	5.4	5.4
Original + 5.0 p. p. m.	8.7	8.8	7.8	7.9

Table IV. Iron Content of Wines

Analyst	Iron Content			
	Muscat	Haute Sauterne	Dry Sauterne	Claret
	P. p. m.	*P. p. m.*	*P. p. m.*	*P. p. m.*
A	2.4	7.6	7.4	5.9
	2.4	7.7	7.4	6.0
B	2.3	7.7	7.3	5.8
	2.4	7.7	7.4	6.0
C	2.4	8.0	7.5	6.0
	2.3	7.9	7.3	6.0
D	2.4	7.7	7.5	6.0
	2.5	7.6	7.5	5.9

Table V. Iron Content of Wines

Method	Iron Content					
	Muscat	Sherry	Port	Sauterne	Riesling	Claret
	P. p. m.	*P. p. m.*	*P. p. m.*	*P. p. m.*	*P. p. m.*	*P. p. m*
Stugart	3.3	3.1	3.5	4.8	7.4	3.9
	3.1	3.5	3.2	4.9	7.8	3.8
Mercaptoacetic acid	3.2	2.8	3.1	5.4	7.1	3.7
	3.4	2.9	3.3	5.0	7.8	4.0
o-Phenanthroline	3.4	3.3	3.2	5.2	7.4	3.9
	3.5	3.3	3.2	5.3	7.3	4.0

Summary

The use of the *o*-phenanthroline method by the authors for several months has indicated its value for the rapid and accurate determination of small amounts of iron in biological substances, such as plant tissues and their extracts, and for similar analysis of inorganic substances, such as industrial products and dilute salt solutions.

The use of the same tube for wet-ashing, color production, and volumetric dilution further facilitates attaining accuracy and rapidity of procedure. Possible losses due to dry-ashing and to transferring for dilution are avoided.

Under the conditions of this study, the use of *o*-phenanthroline as a colorimetric reagent for the determination of iron offers the advantages over the mercaptoacetic reagent of having a relatively more intense color for a given iron concentration, a greater working sensitivity, a color apparently more desirable for colorimetric comparison purposes, and a color which is stable over considerable periods of time, no

fading of standards or routine determinations having been observed.

The data presented in this paper indicated that the method gives results with a high degree of both accuracy and precision. When comparisons are made of solutions with iron contents varying not more than 25 per cent, the iron recovery is within the accuracy of colorimetric methods. For these studies, with iron concentrations less than 5 p. p. m. the results were accurate to within less than 10 per cent. For higher concentrations variations are probably not more than 5 per cent. For wide differences (100 to 200 per cent) in iron concentration of compared samples the iron content appears to be somewhat less than theoretical for the sample of high concentration.

Copper, aluminum, and magnesium in the relative concentrations ordinarily occurring in plant tissues do not interfere with the accuracy of the test. Copper in concentrations up to twice that of the iron, and aluminum and magnesium up to ten times that of the iron did not cause interference.

Acknowledgment

The authors wish to express their appreciation to J. N. Byrne and E. E. Baker for their assistance with certain of the analyses.

Literature Cited

(1) Blau, *Monatsh.*, **19**, 648 (1898).
(2) Leavell, G., and Ellis, N. R., Ind. Eng. Chem., Anal. Ed., **6**, 46–7 (1934).
(3) Lyons, Edward, *J. Am. Chem. Soc.*, **49**, 1916–20 (1927).
(4) Saywell, L. G., Ind. Eng. Chem., **27**, 1245–50 (1935).
(5) Saywell, L. G., Dietz, W. H., and Robertson, P. D., *J. Assoc. Official Agr. Chem.*, **17**, 290–3 (1934).
(6) Stugart, R., Ind. Eng. Chem., Anal. Ed., **3**, 390–3 (1931).
(7) Walden, G. H., Hammett, L. P., and Chapman, R. P., *J. Am. Chem. Soc.*, **53**, 3908 (1931).

Received March 23, 1936.

Determination of Sulfur in Rubber

Use of Tetrahydroxyquinone as a Titration Indicator

ROBERT T. SHEEN AND H. LEWIS KAHLER, W. H. & L. D. Betz, Philadelphia, Pa., AND DELBERT C. CLINE, Firestone Tire & Rubber Company, Akron, Ohio

A back-titration method for the determination of sulfur in rubber with the use of tetrahydroxyquinone as an internal indicator is described. The sulfur in the soluble sulfate form is precipitated by excess standard barium chloride; the zinc, iron, and other heavy metals are precipitated by potassium hydroxide at pH 8.3, and these joint precipitates are filtered off; the barium in the filtrate is determined by titration of an aliquot with standard sodium sulfate using tetrahydroxyquinone as an indicator, the colorimetric change being from red to yellow. The time of a single determination is 20 minutes, showing considerable saving of time over gravimetric analysis. The method is accurate and sulfur control is maintained very well within acceptable limits.

THE use of tetrahydroxyquinone was first suggested as an indicator for the direct titration of sulfate by Schroeder (*1*) and the application of the method was extended by Sheen and Kahler (*2*). This method allows the direct titration of sulfate in a sample with standard barium chloride solution, the end point being indicated by a change from the yellow sodium salt to the red barium salt of the tetrahydroxyquinone.

It has been necessary to determine the sulfur in rubber by gravimetric precipitation as barium sulfate, inasmuch as most rapid methods proposed up to the present time have not been found sufficiently accurate to warrant acceptance by the field. The method proposed allows for the oxidation of sulfur by standard procedures to sulfate, precipitation of the sulfate with excess barium chloride, as well as precipitation of the zinc, iron, and other heavy metals by potassium hydroxide, filtration of the precipitate, neutralization of the filtrate to the acid side of phenolphthalein, and the back-titration of excess barium ion with the standard sodium or potassium sulfate to a colorimetric end point from the red barium salt of tetrahydroxyquinone to the yellow sodium salt of tetrahydroxyquinone. This method requires only a small fraction of the time consumed in a gravimetric analysis and the accuracy is well within acceptable limits for sulfur control.

Experimental

The indicator used throughout this study was manufactured in the Betz laboratories and considerable quantities have been furnished for the determination of sulfur in coal, oil, water, and cement, and in other fields where the determination of sulfate has previously been performed mainly by gravimetric precipitation. The indicator is a dispersion in potassium chloride of the disodium salt of tetrahydroxyquinone, ground to pass a 100-mesh screen, and is supplied under the name of THQ.

Materials and Reagents. Standard barium chloride solution, 1 cc. = 3 mg. of sulfur. Standard sodium sulfate solution, 1 cc. = 0.8 mg. of sulfur. Hydrochloric acid, 0.02 *N*. Tetrahydroxyquinone indicator. Ethyl alcohol or ethyl denatured by formula 30, 3-A, or 2-B, or isopropyl alcohol. Freshly prepared 10 per cent solution of potassium hydroxide (carbonate-free). Phenolphthalein indicator. Measuring dipper capacity 0.2 gram of tetrahydroxyquinone.

Procedure. Oxidize the sulfur from the rubber by one of the standard methods. Select a volume of the solution equivalent to a 1-gram sample of rubber and precipitate the sulfate by pipetting into the solution 50 cc. of standard barium chloride in the cold (1 cc. = 3 mg. of sulfur). (This amount of barium chloride solution will allow a sufficient excess to precipitate up to 13 per cent of sulfur in rubber. Higher percentages can be determined by using a higher excess.) Introduce phenolphthalein indicator and add 10 per cent freshly prepared potassium hydroxide just to the alkaline side of the phenolphthalein. Zinc, iron, and other heavy metals will be precipitated.

TABLE I. COMPARISON OF GRAVIMETRIC ANALYSIS AND TETRAHYDROXYQUINONE METHOD

(In determination of total sulfur in rubber[a])

Sample No.	Volume of Na_2SO_4[b]	Sulfur THQ	Sulfur Gravimetric	Difference	Other Materials Present
	Cc.	%	%	%	%
1	35.20	2.02	2.02	0.00	ZnO 4.50
	35.10	2.07	2.05	0.02	
2	35.18	2.03	2.02	0.01	ZnO 10.3
	35.20	2.02	2.02	0.00	
3	35.14	2.05	2.06	0.01	ZnO 14.8
	35.18	2.03	2.03	0.00	
4	36.68	1.37	1.33	0.04	ZnO 5.5
	36.58	1.42	1.37	0.05	CaO 7.5
					Fe 2.6
5	22.04	7.81	7.87	0.04	ZnO 5.4
	22.10	7.78	7.85	0.07	

[a] Analyses were performed in the laboratories of W. H. & L. D. Betz.
[b] Na_2SO_4, 1 cc. = 0.549 mg. of sulfur. $BaCl_2$, 1 cc. = 3.496 mg. of sulfur.

Filter through coarse rapid paper. It will be found that a gelatinous precipitate of zinc hydroxide, etc., will occlude the precipitated barium sulfate in such a manner that a fine paper is not required. Wash the precipitate carefully with small portions of cold distilled water, keeping the volume of filtrate at a minimum. Make the filtrate up to a volume of 200 cc. in a volumetric flask and pipet 25 cc. of the total volume into a 125-cc. Erlenmeyer flask. Discharge the red color of the phenolphthalein with 0.02 *N* hydrochloric acid, add 25 cc. of alcohol (ethyl, denatured by formula 30, 3-A, or 2-B, or isopropyl) and one dipper of tetrahydroxyquinone, and titrate with standard sodium sulfate until the red color of the solution changes to a yellow. Shake the flask thoroughly during the titration to establish equilibrium conditions.

CALCULATION OF RESULTS. With the above conditions Equation 1 can be used to calculate the percentage of sulfur present in 1 gram of the original sample.

$$0.1\,[150 - (\text{cc. of } Na_2SO_4 \times 0.80 \times 8)] = \text{per cent of total sulfur in rubber} \quad (1)$$

where

0.1 is a factor involving the change of mg. of sulfur to grams of sulfur and 100

150 is the number of mg. of sulfur equivalent to 50 cc. of barium chloride

cc. of Na_2SO_4 is the volume of Na_2SO_4 required in the back-titration of a 25-cc. sample

0.80 is the strength of Na_2SO_4 in mg. of sulfur per cc. used in the back-titration

8 is a factor for the aliquot of the sample taken in the titration

Some of the routine work done in the application of the method to date has shown that a 0.25-gram sample gives excellent results. With this size of sample, precipitate the sulfate with 10 cc. of barium chloride (1 cc. = 7.5 mg. of sulfur), proceed as above, and back-titrate with sodium sulfate (1 cc. = 0.40 mg. of sulfur). The formula then for the total sulfur is:

$$0.4\,[75 - (\text{cc. of } Na_2SO_4 \times 0.40 \times 8)] = \text{per cent of total sulfur in rubber} \quad (2)$$

In the determination of free sulfur, use the procedure advanced for total sulfur with the following modifications:

Convert the sulfur in a 2-gram sample by the customary procedure and precipitate the sulfate in the cold by introducing 20 cc. of barium chloride (1 cc. = 3 mg. of sulfur). Proceed as above with the addition of potassium hydroxide and filtration (use a fine paper, which will retain barium sulfate), making the filtrate up to 100 cc. It is possible to confine the filtrate to this volume, even after thorough washing, because of the absence of zinc, iron, etc.

The sulfur content is computed by Formula 3.

$$0.05\,[60 - (\text{cc. of } Na_2SO_4 \times 0.80 \times 4)] = \text{per cent of free sulfur in rubber} \quad (3)$$

The validity of the method was established under both research and routine conditions. Under research conditions a number of solutions were prepared in the laboratories of the Firestone Tire & Rubber Company and the method for the determination of sulfur was applied in the Betz laboratories. The results are given in Tables I and II, showing a comparison of gravimetric precipitation as barium sulfate with the results obtained with tetrahydroxyquinone. Table I gives results with total sulfur and Table II with free sulfur.

In Table I the maximum difference in the gravimetric analysis was 0.04 per cent with an average of 0.025 per cent and the greatest difference of the tetrahydroxyquinone method was 0.05 per cent with an average of 0.033 per cent. The average difference between percentage of sulfur determined by gravimetric analysis and tetrahydroxyquinone is 0.03 per cent. These percentage differences are well within the limits of 0.1 per cent as set up by the A. S. T. M.

Table II shows that the maximum difference obtained in sulfur percentage when the tetrahydroxyquinone method is compared to the gravimetric method is 0.03 per cent, while the average percentage difference is 0.01 per cent. Here again the tetrahydroxyquinone method gives results very safely within the limits of tolerance set up by the A. S. T. M.

Under routine conditions in the Firestone Tire & Rubber Company, the total sulfur in four different types of stocks was determined by gravimetric analysis and tetrahydroxyquinone method. Five cubic centimeters of barium chloride (1 cc. = 4.110 mg. of sulfur) were used to precipitate the sulfate except in the case of sample 3, mechanical goods stock, where 6 cc. were employed. Results obtained by these two methods are presented in Table III.

Table III shows that with various types of rubber stocks the tetrahydroxyquinone method gave results within an

TABLE II. COMPARISON OF GRAVIMETRIC ANALYSIS AND TETRAHYDROXYQUINONE METHOD

(In determination of free sulfur in rubber)

Sample No.	Volume of Na_2SO_4[a]	Sulfur THQ[b]	Sulfur Gravimetric[c]	Difference
	Cc.	%	%	%
1	30.88	0.100	0.106	0.006
	30.96		0.097	0.003
2	27.40	0.500	0.490	0.010
	27.52		0.480	0.020
3	22.95	0.973	0.977	0.004
	23.00		0.973	0.000

[a] Na_2SO_4, 1 cc. = 0.549 mg. of sulfur. $BaCl_2$, 1 cc. = 3.496 mg. of sulfur
[b] Analysis completed in laboratories of W. H. & L. D. Betz.
[c] Analysis completed in laboratories of Firestone Tire & Rubber Co.

TABLE III. COMPARISON OF GRAVIMETRIC ANALYSIS AND TETRAHYDROXYQUINONE METHOD[a]

(In determination of total sulfur in rubber)

Sample	Volume of Na_2SO_4[b]	Sulfur THQ	Sulfur Gravimetric	Difference
	Cc.	%	%	%
		Tread stock		
1	12.70	2.63	2.61	0.02
2	13.20	2.41	2.43	0.02
3	14.80	1.71	1.67	0.04
		Ply stock		
1	12.90	2.54	2.52	0.02
2	14.00	2.06	2.04	0.02
3	13.90	2.10	2.07	0.03
4	12.35	2.78	2.80	0.02
		Extra tread ply		
1	12.60	2.68	2.63	0.05
2	14.40	1.88	1.87	0.01
3	13.60	2.24	2.22	0.02
4	14.20	1.97	1.98	0.01
		Mechanical goods stock		
1	12.35	2.78	2.74	0.04
2	8.90	4.30	4.25	0.05
3	5.38	5.85	5.80	0.05
4	14.65	1.77	1.73	0.04

[a] Analyses were performed in laboratories of Firestone Tire & Rubber Co
[b] Na_2SO_4, 1 cc. = 1.100 mg. of sulfur. $BaCl_2$, 1 cc. = 4.110 mg. of sulfur

average of 0.03 per cent of gravimetric analysis in fifteen determinations, the greatest difference between the two methods being 0.05 per cent.

Prior to the establishment of the method as presented, a direct titration of sulfate was attempted by employing tetrahydroxyquinone after the removal of the zinc, iron, etc., which offered interference in the quantities present in these samples. Exhaustive work proved that the removal of the zinc, iron, etc., by precipitation through the addition of potassium hydroxide, potassium carbonate, trisodium phosphate, and potassium ferrocyanide over various pH ranges from 4 to 8 removed a high percentage of sulfate, probably by occlusion and the formation of the insoluble sulfate complexes. All results were low, in some cases to the extent of 50 per cent, and therefore the direct titration of sulfate was discarded and the back-titration was investigated and found to be successful.

Conclusion

The determination of sulfur in rubber by the precipitation of oxidized sulfur as sulfate by means of barium chloride and the back-titration of the excess barium has been shown to be as accurate as the gravimetric procedure in solutions of these characteristics for the determination of sulfur, with the use of tetrahydroxyquinone as the indicator. The method is very rapid compared to the gravimetric procedure and after oxidation to the sulfate form in solution, a determination can be made on a single sample in 20 to 30 minutes; with groups of analyses this time can be greatly reduced when compared to the time required for a single analysis.

Acknowledgment

This problem was studied as a joint project by the Firestone Tire & Rubber Company, Akron, Ohio, and the W. H. & L. D. Betz laboratories, Philadelphia, Pa., and the aid of both companies is gratefully acknowledged.

Literature Cited

(1) Schroeder, W. C., Ind. Eng. Chem., Anal. Ed., 5, 403–6 (1933).
(2) Sheen, R. T., and Kahler, H. L., *Ibid.*, 8, 127 (1936).

Received September 18, 1936. Presented before the Division of Rubber Chemistry at the 92nd Meeting of the American Chemical Society, Pittsburgh, Pa., September 7 to 11, 1936.

Determination of Carotene in Forage

A Modification of the Guilbert Method

WALTER J. PETERSON, J. S. HUGHES, AND H. F. FREEMAN
Kansas Agricultural Experiment Station, Manhattan, Kan.

GUILBERT (*1*) has reported a method for the determination of carotene in forage which, it is claimed, gives consistently reproducible results, comparable to those obtained by the acetone-ether extraction method of Schertz (*3*). The main features of the Guilbert method are as follows:

> The sample is digested for 0.5 hour with a saturated solution of potassium hydroxide in ethyl alcohol. Ethyl ether is added to the digestion mixture and the chlorophyllins and flavones are separated by washing with water. The ether solution containing carotene and xanthophyll is evaporated on a steam or water bath to remove the ether. The residue is extracted with petroleum ether, and xanthophyll is removed by the usual method with 90 per cent methyl alcohol. The petroleum ether solution, containing the carotene, is brought to volume and compared in a colorimeter against Sprague's (*4*) dye standard.

In a number of preliminary determinations in this laboratory on commercially dehydrated alfalfa meal using the Guilbert method, consistently reproducible results were obtained only when special precautions were taken. It was found necessary to purify the ether shortly before using in order to remove ether oxides. To avoid losses of carotene during evaporation of the ether from the carotene-xanthophyll solution, it was found advisable to remove the ether by vacuum distillation, or distillation with a stream of nitrogen at a temperature of less than 40° C.

During the past year a modification of the Guilbert method has been used in the authors' laboratories which is considerably shorter, eliminates several possibilities of carotene loss in manipulation, and gives results which are readily reproducible. The original ether extraction of the Guilbert method has been eliminated entirely. Instead, petroleum ether (b. p. 40–60°) is used. This obviates the necessity of carrying on a single solvent evaporation during the course of the determination, and excludes the possibility of carotene decomposition which might occur during the ether evaporation required in the original method. The method is considerably shortened, inasmuch as the chlorophyllins, flavones, alkali, and xanthophyll can be removed directly from the petroleum ether exactly as Guilbert describes their removal from ether and petroleum ether, respectively.

The method has been further improved by the use of spectrophotometric methods in the determination of carotene concentration. For each determination optical density measurements are made at wave lengths 4550, 4700, and 4800 Å. Using the absorption coefficients calculated for β-carotene in petroleum ether at these wave lengths, the carotene concentration is determined at each wave length from the equation $c = D/kb$, where b is the thickness in centimeters of the layer of solution, c is the concentration in grams per liter of the carotene, D is the optical density (read directly from the spectrophotometer), and k is the extinction coefficient (frequently designated as the specific transmissive index or absorption index). The extinction coefficients for β-carotene in various solvents are recorded in Table I.

The carotene concentration obtained should be identical for each of the three wave lengths. Thus, for each analysis, the purity of the carotene in solution is definitely established and the complete removal of other pigments ensured. When variations in the concentration calculated for the various wave lengths are within the normal limits of error for spectro-

Table I. Extinction Coefficients for β-Carotene

Wave Length	80% Ethyl Alcohol, 20% Ethyl Ether, Miller (*2*)	Petroleum Ether (b. p. 40–60°), Seibert[a]	Skellysolve B (b. p. 60–70°), Authors[b]
4500	247	243	238
4550	243	231	227
4700	210	207	200
4800	221	212	212

[a] These coefficients were obtained from H. F. Seibert of the S. M. A. Corporation, Cleveland, Ohio, and checked by the authors.
[b] Skellysolve B, a special commercial grade of petroleum ether, can be successfully substituted for petroleum ether (b. p. 40–60°) in the modified method described.

photometric measurements, the average of the three values is taken as the final figure for the carotene concentration.

A series of determinations on commercially dehydrated alfalfa meal by the original Guilbert method, but using specially purified ether and carrying out all solvent distillations with a stream of nitrogen at less than 40°, gave an average of 98 p. p. m. of carotene. The modified method gave 94 p. p. m. Similarly a sample of feed gave 13.7 p. p. m. by the Guilbert, and 14.0 p. p. m. by the modified method.

Summary

The Guilbert method for the determination of carotene in forage has been modified. Petroleum ether (b. p. 40–60°) has been substituted for diethyl ether in the extraction of the digested sample.

Spectrophotometric methods have been used in the determination of carotene concentration.

Specific absorption coefficients for β-carotene in a number of solvents are reported.

Literature Cited

(1) Guilbert, H. R., Ind. Eng. Chem., Anal. Ed., 6, 452 (1934).
(2) Miller, E. S., Mackinney, G., and Zscheile, Jr., F. P., *Plant Physiol.*, 10, 375 (1935).
(3) Schertz, F. M., *Ibid.*, 3, 211 (1928).
(4) Sprague, H. B., *Science*, 67, 167 (1928).

Received August 17, 1936. Contribution 212, Department of Chemistry

Determination of Sodium

Removal of Phosphorus before Determining Sodium by the Uranyl Zinc Acetate Method

O. R. OVERMAN AND O. F. GARRETT[1]
Department of Dairy Husbandry, Illinois Agricultural Experiment Station, Urbana, Ill.

BARBER and Kolthoff (*1*), in 1928, published their method for the rapid and direct determination of sodium in which the sodium is precipitated by means of uranyl zinc acetate. Later they (*2*) indicated that phosphates and arsenates interfere in the determination and recommended removal with magnesia mixture. Butler and Tuthill (*4*) removed phosphates from urine samples by the addition of powdered calcium hydroxide. Bougault and Cattelain (*3*) used lead acetate and removed the excess lead with magnesium sulfate. Peters and Van Slyke (*5*) precipitated with barium chloride and removed the excess barium with ammonium carbonate. All these methods introduce into the sodium solution a considerable concentration of salts. Before adding the uranyl zinc acetate it is necessary to reduce the volume of sodium solution to 1 or 2 ml. It was the experience of the authors that, when the above methods for the removal of phosphorus were used, crystallization of the excess salts began at a volume considerably above 2 ml., so that the sodium solution could not be reduced to the proper volume.

In a search for a reagent for the removal of the phosphate ion preliminary results indicated that powdered zinc carbonate could be used successfully. In order to test the efficiency of this reagent, it was tried on combined solutions of pure salts having the following composition:

2.5 mg. of potassium per ml. as KCl and KH_2PO_4
2.0 mg. of calcium per ml. as $CaCO_3$
1.5 mg. of phosphorus per ml. as KH_2PO_4
0.2 mg. of magnesium per ml. as $MgSO_4 \cdot 7H_2O$
0.05 to 1.0 mg. of sodium per ml. as NaCl

With the exception of sodium, this is the approximate ratio of the occurrence of these elements in the ash of milk. Ten milliliters of each solution were used for a determination. The results, shown in Table I, indicate that the method is satisfactory so long as the amount of sodium in the sample is not too great. Past workers have given 8 mg. as the upper limit for the amount of sodium to be used in a determination.

Salt solutions similar to the ones above but containing sodium in 0.05-mg. increments beginning at 5.00 mg. per determination were made. Results on these solutions were compared with results on solutions containing only sodium. The comparisons, shown in Table II, indicate that the method is as accurate for determining sodium after the removal of the phosphate ion with zinc carbonate as it is when used on solutions containing only sodium.

The method was applied to the determination of sodium in the ash of cow milk. To some of the samples of milk ash there were added known quantities of sodium before removing the phosphorus. The accuracy of the entire procedure in recovering this sodium is shown by the results in Table III.

In order to observe the influence of various elements and certain other ions on the method, solutions were made containing these ions along with sodium and phosphorus. They were then subjected to the procedure for the removal of phosphorus and the determination of sodium. The results are reported in Table IV.

The $C_2O_4^{--}$ ion was the only anion studied which caused an appreciable error in the determination. In this case a slight precipitate was formed after filtration of the zinc carbonate and zinc phosphate. Although this precipitate was dissolved on the addition of a drop of acetic acid, it

Table I. Determination of Sodium

Sodium in Sample	Sodium Determined: Duplicates		Sodium Determined: Average	Difference
Mg.	*Mg.*	*Mg.*	*Mg.*	*Mg.*
10.0	9.82	9.89	9.86	−0.14
5.0	5.00	5.06	5.03	+0.03
2.0	2.06	1.99	2.03	+0.03
1.0	1.02	1.01	1.02	+0.02
0.5	0.53	0.52	0.53	+0.03

Table II. Comparison of Results on Solutions of Identical Sodium Concentration

Sodium in Sample	Sodium Determined: Solutions Containing only Sodium	Difference	Sodium Determined: Solutions Containing Na, Ca, Mg, K, P	Difference
Mg.	*Mg.*		*Mg.*	
5.00	5.01	+0.01	5.03	+0.03
5.05	5.08	+0.03	5.06	+0.01
5.10	5.11	+0.01	5.10	...
5.15	5.13	−0.02	5.17	+0.02
5.20	5.19	−0.01	5.20	...

[1] Present address, New Jersey College of Agriculture, Rutgers University, New Brunswick, N. J.

Table III. Recovery of Sodium Added to Samples of Milk Ash

Sample No.	Sodium Determined: Milk ash	Sodium Determined: Milk ash + Na	Sodium Added	Sodium Recovered	
	Mg.	*Mg.*	*Mg.*	*Mg.*	%
A 7	3.97	5.17	1.20	1.20	100.0
A 18	4.98	7.42	2.40	2.44	101.7
A 22	1.79	2.99	1.20	1.20	100.0
B 1	6.69	9.04	2.40	2.35	97.1
B 12	7.82	10.22	2.40	2.40	100.0
B 14	7.60	10.09	2.40	2.49	103.7
B 25	6.14	8.63	2.40	2.49	103.7
				Av.	100.9

Table IV. Influence of Various Ions on the Method

Element Present[a]	Sodium in Sample	Sodium Determined	Difference
	Mg.	*Mg.*	*Mg.*
As as KH_2AsO_4	5.00	5.02	+0.02
C_2O_4 as $K_2C_2O_4$	5.00	5.08	+0.08
Mo as $(NH_4)_6Mo_7O_{24}\cdot 4H_2O$	5.00	5.02	+0.02
Cr as $K_2Cr_2O_7$	5.00	5.01	+0.01
Al as $AlCl_3\cdot 6H_2O$	5.00	4.74	−0.26
Ba as $BaCl_2\cdot 2H_2O$	5.00	Does not filter clear	
Cd as $CdCl_2\cdot 2H_2O$	5.00	Does not filter clear	
Cr as $CrCl_3$	5.00	Does not filter clear	
Co as $Co(NO_3)_2\cdot 6H_2O$	5.00	Does not filter clear	
Cu as $Cu(NO_3)_2\cdot 3H_2O$	5.00	Does not filter clear	
Fe as $Fe(NH_4)_2\cdot(SO_4)_2\cdot 6H_2O$	5.00	4.81	−0.19
Pb as $Pb(C_2H_3O_2)_2\cdot 3H_2O$	5.00	4.97	−0.03
Mn as $MnSO_4\cdot 4H_2O$	5.00	5.04	+0.04
Ni as $NiSO_4\cdot 6H_2O$	5.00	5.02	+0.02

[a] In addition to Na and P, 5 mg. of each element in sample.

apparently reformed when the sodium precipitating reagent was added.

The filtrates from the solutions containing Ba^{++}, Cd^{++}, Cr^{++}, Co^{++}, and Cu^{++} came through the paper definitely cloudy. The cloudiness disappeared when a drop of acetic acid was added, but a very copious extraneous precipitate formed with the addition of uranyl zinc acetate which was almost impossible to filter through the sintered-glass crucibles. The low results when Al^{+++} and Fe^{++} were present may be accounted for on the basis of the gelatinous precipitates which form with these elements and which undoubtedly adsorbed some of the sodium. The filtrate in these two cases came through very clear. Pb^{++}, Mn^{++}, and Ni^{++} caused no interference with the determinations. Zinc carbonate is apparently as satisfactory for the removal of the orthoarsenate ion from solution as it is for the orthophosphate ion.

Experimental data indicated that complete precipitation of the phosphate ion occurred when the solution was allowed to stand at least 6 hours at room temperature. When 20 ml. of water were added, the beaker was covered with a watch glass, and the mixture slowly boiled until the volume was reduced to about 10 ml., the results on sodium were slightly less than 1 per cent low. When the mixture was shaken frequently with warming for 1 hour, the results were slightly less than 1 per cent high. Shaking in the same way at room temperature gave results slightly over 2 per cent high. Either boiling the solution as above or shaking and warming for at least 1 hour may be substituted for standing at room temperature for 6 hours without seriously affecting the results of the determination.

The method was applied to a solution of pure $NaNH_4HPO_4\cdot 4H_2O$ containing 0.5 mg. of sodium per ml. An aliquot containing 5.0 mg. of sodium was taken for a determination which showed 5.22 mg. of sodium. When another aliquot of this solution was first digested with nitric acid, the nitric acid evaporated, and the phosphate ion precipitated in the usual way, 5.01 mg. of sodium were found in the solution. The filtrate from the zinc carbonate precipitation came through perfectly clear.

As a result of their experience, the authors propose the following procedure for the removal of the phosphate ion from a solution to be used for the determination of sodium by the Barber and Kolthoff method:

Take an aliquot of the solution containing 2 to 8 mg. of sodium in a small beaker (50 or 100 ml.). The volume of solution taken should be 10 to 15 ml. Add an excess of powdered zinc carbonate of reagent grade, cover the beaker, and let stand at room temperature at least 6 hours or overnight. If the solution contains too much hydrochloric acid there is likely to be rather violent effervescence which may result in the loss of material; also, too much zinc chloride will go into solution, which will cause difficulty later when the volume of solution is being reduced to the proper amount. If too much hydrochloric acid is present, evaporate to dryness, and add 10 ml. of water and just enough hydrochloric acid to take all the salts into solution. Then add the zinc carbonate. Filter through quantitative paper (9 cm.) and wash thoroughly 5 or 6 times with cold water. Catch the filtrate in a 50-ml. beaker, as this is a satisfactory size in which to make the precipitation of sodium. Carry a blank through the entire procedure. If a slight precipitate forms when the solution is being evaporated, a drop of acetic acid usually will redissolve it and does not interfere with the final determination of sodium.

Literature Cited

(1) Barber, H. H., and Kolthoff, I. M., *J. Am. Chem. Soc.*, **50**, 1625 (1928).
(2) *Ibid.*, **51**, 32, 33 (1929).
(3) Bougault, J., and Cattelain, E., *J. pharm. chim.*, **15**, 97 (1933).
(4) Butler, A. M., and Tuthill, Elizabeth, *J. Biol. Chem.*, **93**, 171 (1931).
(5) Peters, P. J., and Van Slyke, D. D., "Quantitative Clinical Chemistry," Vol. II, Baltimore, Williams & Wilkins Co., 1932.

Received September 1, 1936. The data in this paper are taken mainly from a thesis presented by O. F. Garrett in partial fulfillment of the requirements for the degree of doctor of philosophy at the University of Illinois.

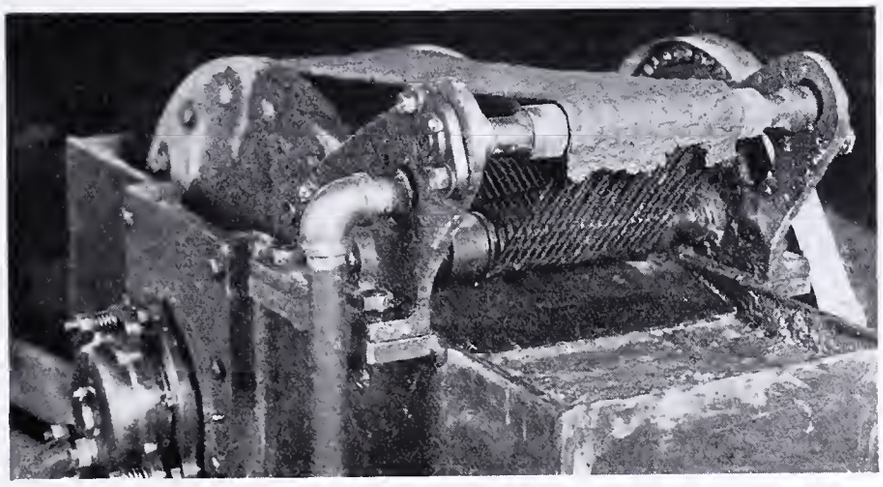

Courtesy, Goslin-Birmingham Manufacturing Company

Determination of Small Quantities of 2-Naphthylamine, Aniline, and *o*-Toluidine in Certain Food Dyes

O. L. EVENSON, J. A. KIME, AND S. S. FORREST
Food and Drug Administration, U. S. Department of Agriculture, Washington, D. C.

IN THE manufacture of the food dyes Yellow AB (benzeneazo-2-naphthylamine) and Yellow OB (tolueneazo-2-naphthylamine), it is possible that small quantities of the intermediates used may be present in the finished product. Since these intermediates, 2-naphthylamine, aniline, and *o*-toluidine, are more or less toxic, an accurate and rapid method for their estimation is needed.

The methods based upon diazotization and coupling of the intermediates to produce colored compounds were not investigated, as the method recorded here seemed more convenient as a routine method.

It has been found possible, by a further extension and modification of the classical hypochlorite method for estimating aniline, to determine 2-naphthylamine, as well as *o*-toluidine or aniline, in the same solution.

According to Elvove (*1*), the color produced by aniline in the presence of calcium hypochlorite is intensified by the addition of alkali. Upon this fact is based his colorimetric method for the determination of small quantities of aniline. The authors have observed that *o*-toluidine also produces a yellow color in alkaline solution and that either of these intermediates, whether present in large or small amounts, produces only a faint trace of color in acid solution. They have also found that 2-naphthylamine produces a yellow color in acid solution which may also be quantitatively estimated. This intermediate, if not present in amounts exceeding 0.5 mg. in a volume of 30 cc., produces only a faint trace of color in alkaline solution. The effect of these interfering traces of color, that produced by aniline or *o*-toluidine in acid solution and by 2-naphthylamine in alkaline solution, may be neutralized by using standards containing approximately the same amounts of each amino compound as the unknown sample. On these observations is based the method recorded here for the quantitative evaluation of aniline or *o*-toluidine and 2-naphthylamine in the same solution.

The amount of calcium hypochlorite used should be sufficient, but not excessive, as too large an amount tends to destroy the color. About 3 drops, or 0.1 to 0.2 cc. of the freshly made solution, containing about 1 per cent of available chlorine, were found suitable.

The amount of alkali added to destroy the color due to 2-naphthylamine and bring out the color due to aniline or *o*-toluidine was found to be a controlling factor in the time of appearance of the maximum color. About 1.5 cc. of 10 per cent sodium hydroxide in excess of that necessary to neutralize the acid present were found to produce the maximum color in a convenient period of time, such as 5 minutes.

A much larger excess of alkali brings out the color at once, but the color also tends to fade sooner. In the presence of a very slight excess, the maximum color may not appear at all.

It was found possible to detect 0.0075 mg. in 30 cc. or 1 part in 4 million of 2-naphthylamine or *o*-toluidine, and 0.005 mg. or 1 part in 6 million of aniline.

Reagents

A standard solution containing 50 p. p. m. of 2-naphthylamine is prepared as follows:

Dissolve 0.25 gram of the pure compound in 100 cc. of benzene in a separatory funnel. Extract the amino compound by shaking with four 100-cc. portions of hydrochloric acid (1 to 3). Then wash once with 100 cc. of water and dilute the combined extracts and the wash water to 1 liter in a volumetric flask, adding 150 cc. of hydrochloric acid to make the acid concentration 1 to 3. Dilute 100 cc. of this solution to 500 cc.

A standard solution containing 50 p. p. m. of aniline or *o*-toluidine is prepared by dissolving the pure amino compound in hydrochloric acid (1 to 19).

A calcium hypochlorite solution containing approximately 1 per cent of available chlorine is prepared by shaking 5 grams of the fresh $Ca(OCl)_2$ with 25 cc. of distilled water at intervals for about 10 minutes, filtering, and washing with 50 cc. of water.

Method

Dissolve 10 grams of dye in 100 cc. of benzene. Extract the intermediates by shaking with hydrochloric acid (1 to 19) heated

TABLE I. ANALYSIS OF SAMPLES CONTAINING KNOWN AMOUNTS OF INTERMEDIATES

No.	2-Naphthylamine			Aniline			*o*-Toluidine		
	Present	Found	Difference	Present	Found	Difference	Present	Found	Difference
	%	%	%	%	%	%	%	%	%
1[a]	0.009	0.010	+0.001	...	...	...	0.011	0.012	+0.001
2[a]	0.010	0.011	+0.001	...	...	...	0.012	0.012	0
3	0.0135	0.012	−0.0015	...	...	...	0.0085	0.009	+0.0005
4	0.06	0.06	0	0.02	0.02	0	...	...	...
5	0.017	0.017	0	0.04	0.04	0	...	...	...
6	0.015	0.015	0	0.0425	0.04	−0.0025	...	...	...
7	0.045	0.044	−0.001	0.008	0.007	−0.001	...	...	...
8	0.09	0.09	0	0.01	0.01	0	...	...	...
9	0.01	0.01	0	0.05	0.048	−0.002	...	...	...
10	Trace	0.001 Trace	...	Trace	0.0006	...	...	...	...
11	0.04	0.04	0	0.04	0.037	0.003	...	...	...
12	0.076	0.08	+0.004	...	...	...	0.012	0.011	−0.001
13	0.10	0.095	−0.005	...	...	...	0.001	Trace	...
14[a]	0.04	0.04	0	...	...	...	0.04	0.04	0
15[a]	0.046	0.05	+0.004	...	...	...	0.046	0.05	+0.004
16[a]	0.010	0.011	+0.001	...	...	...	0.01	0.01	0
17	0.009	0.010	+0.001	...	...	...	0.009	0.009	0
18	0.0115	0.011[a] 0.012	±0.0005	...	...	...	0.0095	0.009[a] 0.010	±0.0005

[a] Amounts added known to analyst.

to 60° C. Shake for 2 minutes with one 50-cc. portion and two 25-cc. portions, successively, then with 50 cc. of distilled water, draining the extracts into another funnel. Wash the combined extracts with 25-cc. portions of benzene until the benzene is colorless. Each benzene portion should be washed with a few cubic centimeters of water to remove acid extract adhering to the side of the funnel, and this wash water should be added to the main acid extract. Dilute the washed acid extract to 200 cc. in a volumetric flask.

Make a preliminary estimation of the per cent of each amino compound present, as follows:

Pipet 10 cc. of the acid extract into a Nessler or suitable test tube and dilute to 30 cc. with distilled water. Prepare a series of standards containing known amounts of the amino compounds to be estimated, and dilute to 30 cc. Add to these and the tube containing the unknown, 0.1 to 0.2 cc. of calcium hypochlorite solution, mix, and compare at once, estimating approximately the amount of 2-naphthylamine present. Then add to each tube about 1.5 cc. of 10 per cent of sodium hydroxide in excess of that required to neutralize the acid in each tube. Mix and let stand 4 or 5 minutes. By comparing the tubes, estimate the approximate amount of aniline or *o*-toluidine present. Knowing the approximate amounts of each intermediate present, make a more accurate estimation as follows:

Take another 10-cc. portion of the acid extract and dilute to 30 cc. Prepare standards containing known amounts of the two intermediates, approximating those present in the unknown as just determined. Add to each tube calcium hypochlorite as before, mix, and compare at once. Determine the per cent of 2-naphthylamine. Then add to each tube 1.5 cc. of 10 per cent sodium hydroxide in excess of that necessary to neutralize the acid present, mix, and let stand 4 to 5 minutes. Estimate the per cent of aniline or *o*-toluidine present. Using 10 cc. of the acid extract, 1 cc. of the standard is equivalent to 0.01 per cent of amino compound. (If the quantity of amino compound present exceeds 0.02 per cent, a smaller volume of the acid extract should be used.)

Application of Method

To test the accuracy of this method, known amounts of the amino compound were added to a benzene solution of 10 grams of Yellow OB from which any amino compound originally present had been previously removed by repeated extraction with warm, dilute hydrochloric acid (1 to 19). The results obtained are shown in Table I. The amounts added were not known to the analyst except as noted.

The maximum error of 12 per cent is not considered excessive in view of the small quantities determined.

The 2-naphthylamine and *o*-toluidine content of Nos. 14 and 15 could easily be distinguished. Referring to Nos. 16, 17, and 18, it was possible to distinguish the 2-naphthylamine content of these and the *o*-toluidine content of No. 16, as compared with the other two, but Nos. 17 and 18 could not be differentiated.

Summary

A colorimetric method is described for determining the free intermediates in the oil-soluble food dyes, Yellow AB and Yellow OB. The method is based upon the observation that in the presence of calcium hypochlorite 2-naphthylamine produces a yellow color in acid solution, and aniline or *o*-toluidine produces a yellow color in alkaline solution. The results obtained on samples containing known amounts of the intermediates showed that the maximum error was 12 per cent.

Literature Cited

(1) Elvove, J. Ind. Eng. Chem., 9, 953–5 (1917).

Received August 21, 1936.

Volumetric Determination of Bromide

After Oxidation to Bromate in the Presence of Much Chloride

I. M. KOLTHOFF and H. YUTZY, University of Minnesota, Minneapolis, Minn.

IN THE course of certain experimental work, it became necessary to make several hundred bromide determinations in the presence of much chloride. After a critical and experimental survey (for a review see Zorkin, *6*), the method originating with van der Meulen (*2*) was selected, in which the bromide is oxidized to bromate with a solution of hypochlorite and the bromate is determined iodometrically after removal of the excess hypochlorite. The procedure was modified by D'Ans and Höfer (*1*), and by Szabo (*4*). The directions given by D'Ans and Höfer are as follows:

The sample in a volume of 35 ml. is treated with 3 grams of sodium dihydrogen phosphate ($NaH_2PO_4 \cdot 2H_2O$), 10 ml. of 0.3 *N* sodium hypochlorite, and 10 grams of sodium chloride and heated slowly (5 to 10 minutes) to 90° C.; 2 ml. of a half saturated solution of sodium formate are added, and the solution is cooled. Then, 0.3 gram of potassium iodide and 25 ml. of 2 *N* hydrochloric acid are added and the solution is allowed to stand a short time and titrated with 0.1 *N* thiosulfate.

The authors believe that this procedure is preferable to that of van der Meulen, which gave good results but was difficult to use because of the uncertainty as to the time of complete removal of hydrogen peroxide (used by van der Meulen instead of formate to reduce the excess of hypochlorite) by boiling in the presence of nickel salts or osmium tetroxide to decompose the excess peroxide. It is likewise more rapid and convenient to use than that of Szabo, which involves evaporation to dryness with hypochlorite (spattering) and an empirical correction depending upon the amount of bromide found. Since D'Ans and Höfer give rather meager data in support of their method, the authors wish to describe briefly the results it has given in their hands and a slight modification of their procedure. In the following experiments the above procedure was followed except that 1 *N* hypochlorite was used and 5 ml. of a solution containing 0.5 gram of sodium formate per ml. were substituted for the half-saturated solution of the same salt. The waiting period between addition of acid and the titration was eliminated by the addition of one drop of 0.5 *N* ammonium molybdate as a catalyst.

Materials Used

Sodium Hypochlorite Solution. The *N* hypochlorite solution was prepared according to van der Meulen (*2*) by dissolving 71 grams of chlorine in 1500 ml. of water containing 88 grams of sodium hydroxide. This was diluted to 2 liters to give a solution *N* in hypochlorite and 0.1 *N* in hydroxide.

Potassium Bromide. Chloride-free bromide was prepared by thermal decomposition of pure potassium bromate. An approximately 0.01 *M* solution was prepared. It was standardized gravimetrically, and also by potentiometric titration with pure silver nitrate. The molarities found were 0.00997 and 0.00996, respectively.

Other chemicals used were of c. p. grade.

Experimental

In the first place it was ascertained that formate does not reduce bromate on boiling under the experimental conditions.

No reduction was found upon boiling a standard bromate solution in the presence of the phosphate and formate (no chloride or hypochlorite added) for various periods of time.

D'Ans and Höfer do not report experiments concerning the amounts of phosphate and hypochlorite necessary under various conditions. In Table I are reported the results of experiments carried out according to the procedure given above but with varying amounts of these reagents. It may be inferred that 1 gram of sodium dihydrogen phosphate and 5 ml. of N hypochlorite are sufficient for the quantitative oxidation of 10 ml. of neutral 0.01 M bromide.

Table I. Effect of Amounts of Phosphate and Hypochlorite

0.00997 M KBr	Phosphate	N NaOCl	0.02089 N $Na_2S_2O_3$	$Na_2S_2O_3$[a] after Correcting for Blank	Molarity of KBr Found	Error
Ml.	*Grams*	*Ml.*	*Ml.*	*Ml.*		%
10.02	3	10	29.20	28.68	0.00997	0.0
			29.21	28.69	0.00997	0.0
			29.20	28.68	0.00997	0.0
			28.97	28.45	0.00989	− 0.8
5.02	3	10	14.88	14.36	0.00996	− 0.1
			14.93	14.41	0.01000	+ 0.3
10.02	1	5	28.92	28.65	0.00996	− 0.1
	2	5	28.90	28.63	0.00995	− 0.2
	3	5	28.75	28.48	0.00990	− 0.7
10.02	1	1	13.27	13.12	0.00456	−54
	2	1	12.15	12.00	0.00417	−56
	3	1	9.77	9.62	0.00334	−66
5.02	1	5	14.56	14.29	0.00991	− 0.6
	1	5	14.58	14.31	0.00992	− 0.5

[a] The total titration volume must be corrected by subtracting a blank run on the reagents. In the above cases it amounted to 0.52 ml. for 3 grams of phosphate, 10 ml. of NaOCl; 0.27 for 1 gram of phosphate, 5 ml. of NaOCl; and 0.15 ml. for 1 gram of phosphate, 1 ml. of NaOCl.

The addition of large amounts of sodium chloride, specified by van der Meulen (*2*), was found to be disadvantageous in the determination of very small amounts of bromide. Even the C. P. grades of sodium chloride contain bromide, necessitating the application of a relatively large blank. Moreover, the high salt concentration makes the starch-iodine end point much less distinct, especially when thiosulfate as dilute as 0.001 N is used. The following experiments were carried out with 0.001 M bromide by the described procedure using 1 gram of phosphate and 5 ml. of N hypochlorite, but without the addition of sodium chloride.

Table II. Determination of 0.001 M Bromide without Addition of Sodium Chloride

0.000997 M KBr Taken	0.01090 N Thiosulfate Used	Thiosulfate after Correcting for Blank	Molarity of KBr Found	Error
Ml.	*Ml.*	*Ml.*		%
10.02	6.23	5.46	0.000990	−0.7
	6.27	5.50	0.000997	0.0
25.00	14.41	13.64	0.000991	−0.6
	14.50	13.73	0.000998	+0.1
50.00	26.62	25.85	0.000939	−5.8
	27.18	26.41	0.000960	−3.7

Apparently, the addition of sodium chloride can be omitted in the determination of 25 ml. of 0.001 M bromide or less; for larger amounts its presence is necessary, as shown by van der Meulen.

The following procedure has yielded good results:

To a suitable (25 ml. or less) volume of the neutral bromide solution add 1 gram of sodium dihydrogen phosphate ($NaH_2PO_4 \cdot 2H_2O$), 10 grams of sodium chloride, and 5 ml. of N sodium hypochlorite, heat just to boiling and add 5 ml. of sodium formate solution (= 2.5 grams of the solid). After cooling, dilute to 150 ml. and add 1.0 gram of potassium iodide, 25 ml. of 6 N sulfuric acid, and 1 drop of 0.5 N ammonium molybdate. Titrate immediately with standard thiosulfate, adding starch solution just before the end point. A blank should be run under identical conditions, substituting an equal volume of water for the bromide solution. The blank is subtracted from the volume of thiosulfate required in the test.

The addition of 10 grams of sodium chloride may be omitted in the test and in the blank when the sample contains less than 25 micromoles of bromide.

The procedure was applied to the determination of bromide in Mallinckrodt's reagent sodium chloride. As will be seen from Table III, the method gives quite reproducible results.

Table III. Bromide Determination in C. P. Sodium Chloride

Sodium chloride taken, grams	10	20
0.01013 N thiosulfate (corrected for blank[a]), ml.	1.65, 1.66	3.35, 3.36

[a] Blank = 0.82 ml. of 0.01013 N thiosulfate.

The figures in Table III correspond to a sodium bromide content of 0.0029 per cent. According to the colorimetric procedure of Stenger and Kolthoff (*3*) a sodium bromide content of 0.0032 per cent was found by Stenger.

Several hundred analyses have been made (*5*) using the modified procedure with satisfactory results. The procedure was also applied to the analysis of mixtures of silver chloride and bromide. The precipitate was digested with 10 ml. of a saturated solution of sodium chloride for a few hours, after which the modified procedure was used. The results agreed within 0.5 per cent with the theoretical values.

Attempts were made to apply the method in the presence of easily brominated organic matter. However, the presence of appreciable amounts of such substances as dyes or gelatin gave erratic results. The dyes, apparently, became brominated, causing low results. Gelatin gave a yellow gelatinous precipitate when hypochlorite was added, which apparently was not reduced by formate, but reacted with iodide and caused high results. Very small amounts of indicators, added in a neutralization, for instance, were harmless. In order to determine bromide in the presence of relatively large amounts of dye or gelatin, the following procedure was successfully used: The sample was evaporated to dryness in a nickel crucible and fused at a low temperature with sodium peroxide. The residue was taken up in hot water and filtered. The filtrate was evaporated to a small volume and neutralized with hydrochloric acid to methyl red, and the modified procedure applied. The results of experiments in which known amounts of bromide were added to gelatin or wool violet agreed within 0.5 to 1 per cent with the theoretical values.

Summary

The modified procedure of van der Meulen and D'Ans and Höfer given in this paper, in which bromide is oxidized to bromate and the latter determined iodometrically, gives accurate, precise, and rapid results. With 10 ml. or more of 0.01 M bromide the accuracy was found to be within 0.3 per cent, and with 10 ml. of 0.001 M bromide within 1 per cent. The procedure is useful for the determination of bromide in commercial chlorides.

Directions are given for the determination of bromide in mixed silver chloride and bromide, and in the presence of dyes and gelatin.

Literature Cited

(1) D'Ans, J., and Höfer, P., *Z. angew. Chem.*, 47, 73 (1934).
(2) Meulen, J. H. van der, *Chem. Weekblad*, 28, 82, 238 (1931); 31, 558 (1934).
(3) Stenger, V. A., and Kolthoff, I. M., *J. Am. Chem. Soc.*, 57, 831 (1935).
(4) Szabo, Z., *Z. anal. Chem.*, 84, 24 (1931).
(5) Yutzy, H., Ph.D. thesis, University of Minnesota, 1936.
(6) Zorkin, F. P., *J. Applied Chem.*, (U. S. S. R.), 7, 852 (1934).

Received October 26, 1936.

Determination of Sulfate, Calcium, and Magnesium in Salt Samples of High Purity

A. C. SHUMAN AND N. E. BERRY

Diamond Crystal Salt Division, General Foods Corporation, St. Clair, Mich.

TO THE authors' knowledge the only published methods for salt analysis are those outlined by the Association of Official Agricultural Chemists (*1*). These methods were presumably designed for the analysis of salt of "average" purity, and experience has shown that when they are applied directly to the analysis of salt of high purity (above 99.90 per cent sodium chloride), dependable results are not obtained. The procedures used in this laboratory, which are presented below, were designed primarily for the analysis of such high-purity salt and have recently been subjected to rigorous investigation and further refinement.

The methods adopted are modifications of the standard procedures for the gravimetric determination of sulfate as barium sulfate, the volumetric determination of calcium by means of ammonium oxalate and potassium permanganate, and the volumetric determination of magnesium by means of 8-hydroxyquinoline (*4*). The modifications have been developed for the purpose of reducing errors to a practical minimum. It was found, however, that in maintaining sufficient speed and facility, the errors involved for certain ranges of composition could not be entirely eliminated. The procedures were therefore "calibrated" by applying them to the analysis of samples covering a range of known compositions.

In the procedures given below the absence of acid-insoluble material and of trivalent metals has been assumed. In case their presence is suspected, standard procedures should be followed for their removal.

Sulfate

SOLUTIONS REQUIRED. Barium chloride dihydrate solution (10 per cent), 1 per cent silver nitrate test solution, and methyl orange indicator solution.

PROCEDURE. Dissolve 50 grams of the salt to be analyzed in 250 cc. of distilled water, add 2 drops of methyl orange indicator, and add hydrochloric acid a drop at a time until the solution is pink colored; then add 1 cc. of acid in excess. Heat the solution almost to boiling and add, all at one time while stirring, 10 cc. of the barium chloride solution. Cover the solution with a watch glass and digest at a temperature slightly below the boiling point until the supernatant liquid is clear. This digestion usually requires about 1 hour.

Allow the solution to cool to about 50° C. and filter through a Whatman No. 42 (or equivalent) filter paper or a well-prepared Gooch crucible. Transfer the precipitate completely to the filter paper by scrubbing the inside of the beaker with a rubber policeman, and wash the precipitate on the filter with distilled water until no cloudiness is produced when the filtrate is tested with the silver nitrate solution. When the washing is complete, transfer the filter paper and its contents to a crucible which has been ignited to constant weight, warm until the paper is dry, and then increase the temperature until the paper is burned and the ash is white. Then heat the crucible in the flame of a Bunsen burner or the upper part of the flame of a Meker burner for about 15 minutes, cool in a desiccator, and weigh as barium sulfate.

Weight of barium sulfate × 1.166 = per cent of sulfate as calcium sulfate. When necessary, apply the correction indicated in Figure 1.

Calcium

SOLUTIONS REQUIRED. Ammonium oxalate solution (4 per cent), saturated calcium oxalate solution, 0.05 *N* potassium permanganate solution, and phenolphthalein indicator solution.

PROCEDURE. Dissolve 50 grams of the salt to be analyzed in 225 cc. of distilled water in a 400-cc. beaker (the Griffin or low form is preferable). Add 2 drops of phenolphthalein indicator and make the solution alkaline, if not already so, by the addition of 1 to 5 ammonium hydroxide solution. Heat the solution almost to boiling and add, while stirring, 25 cc. of the ammonium oxalate solution. Stir for about 0.5 minute more to obtain complete mixing. Cover the beaker with a watch glass and digest the solution at a temperature slightly below the boiling point for 1 hour; then cool rapidly to about 25° C.

Within 3 hours after the precipitation, filter through a Whatman No. 40 (or equivalent) filter paper. Wash the precipitate on the filter paper with 150 cc. of cold 0.2 per cent ammonium oxalate solution by placing the wash liquid 30 or 40 cc. at a time in the beaker in which the precipitation took place, rinsing off the inside of the beaker, and then passing the liquid through the filter paper. (It is not necessary to remove the precipitate completely from the beaker, as this vessel will be used for the subsequent titration.) Reserve the filtrate and washings obtained thus far for the determination of magnesium.

In order to remove the ammonium oxalate remaining in the beaker and on the precipitate and filter paper, wash as above described with 75 cc. of the saturated calcium oxalate solution. Discard the filtrate from this washing.

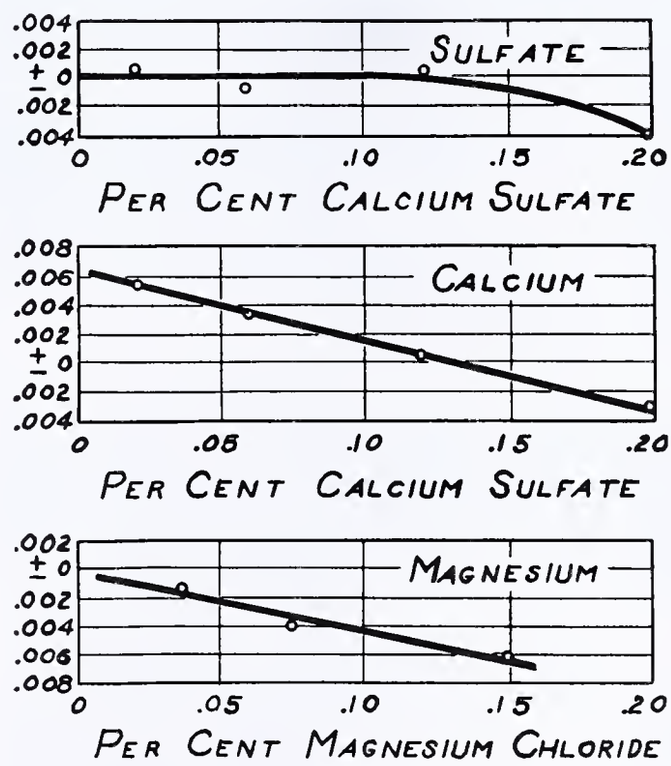

FIGURE 1. CORRECTION CURVES FOR USE WITH STANDARDIZED PROCEDURES

When the washing is completed, transfer as much as possible of the precipitate to the beaker in which the precipitation took place (the most convenient method of transferring the precipitate is to puncture the folded filter paper at its apex with a pointed glass rod, wash off the glass rod into the beaker, and then wash the precipitate down the stem of the funnel into the beaker with a small stream of water from a wash bottle), add 100 cc. of distilled water and 10 cc. of 1 to 1 sulfuric acid, heat to about 90° C., and titrate with 0.05 *N* potassium permanganate solution. When near the end point, add the filter paper and continue the titration, taking as the final end point the first pink color which persists for 0.5 minute.

Cc. of permanganate solution × normality × 0.136 = per cent calcium as calcium sulfate. When necessary, apply the correction indicated in Figure 1.

Magnesium

SOLUTIONS REQUIRED. Acetic acid solution of 8-hydroxyquinoline (2.5 per cent). Dissolve 25 grams of 8-hydroxyquinoline in 60 cc. of glacial acetic acid. When solution is complete, dilute to a volume of 1 liter with cold distilled water.

Potassium iodide solution (25 per cent).

Starch indicator solution. Dissolve 5 grams of soluble starch and 2.5 grams of salicylic acid in 1 liter of water.

Sodium thiosulfate solution (0.2 N).

Potassium bromate-bromide solution (0.2 N). Dissolve 20 grams of potassium bromide and 5.57 grams of potassium bromate in 200 cc. of water and dilute to 1 liter. The titer ratio of this solution to the sodium thiosulfate solution is obtained as follows: To 200 cc. of cool water in a 400-cc. beaker add 10 cc. of the potassium iodide solution and exactly 25 cc. of the potassium bromate-bromide solution. Add quickly, while stirring, 40 cc. of 1 to 1 hydrochloric acid and titrate with the standard sodium thiosulfate solution until nearly colorless. Add 2 cc. of the starch indicator and titrate to the disappearance of the blue color.

PROCEDURE. The filtrate and washings retained from the calcium determination should have a volume of about 400 cc. Heat this solution to 60° or 70° C. and add 16 cc. of ammonium hydroxide (sp. gr. 0.90) and 20 cc. of the 8-hydroxyquinoline solution. Heat to boiling and set aside to cool for about 1 hour, or longer if required for the precipitate to settle.

Transfer the precipitate completely to a Whatman No. 40 (or equivalent) filter paper and wash with 200 cc. of hot 1 to 50 ammonium hydroxide solution. Dissolve the precipitate on the filter with 50 to 75 cc. of hot 1 to 10 hydrochloric acid, dilute the resulting solution to 200 cc., add 15 cc. of concentrated hydrochloric acid, and cool to 25° C. Add exactly 25 cc. of the standard potassium bromate-bromide solution and then immediately 10 cc. of the potassium iodide solution. Titrate with the standard thiosulfate solution until the solution is almost clear, add 2 cc. of starch solution, and titrate to the disappearance of the blue color. (The solution is not colorless but is a pale yellow color at the end point.)

The number of cubic centimeters of thiosulfate solution used in the titration, B, subtracted from the number of cubic centimeters equivalent to 25 cc. of the potassium bromate-bromide solution, A, gives the number of cubic centimeters of thiosulfate solution equivalent to the magnesium present.

$(A - B) \times 0.0238 \times N$ = per cent of magnesium chloride, where N represents the normality of the sodium thiosulfate solution and A and B are as indicated above. When necessary apply the correction indicated in Figure 1.

Method of Reporting Results

When the calcium is in excess of the sulfate (both expressed as calcium sulfate), report the sulfate as calcium sulfate and the excess calcium as calcium chloride.

When the sulfate is in excess of the calcium (both expressed as calcium sulfate), report the calcium as calcium sulfate and the excess sulfate as sodium sulfate.

Report the magnesium as magnesium chloride.

Discussion of Procedures

The investigation of the method for the determination of sulfates revealed the presence of various sources of error. Low results, due primarily to the solubility of barium sulfate in the sodium chloride solution from which it is precipitated, were found to occur when the barium chloride solution was added slowly. On the other hand, high results, due primarily to the occlusion of barium chloride by the precipitate, were found to occur when the barium chloride solution was added quickly. Also, higher results were obtained in the presence of hydrochloric acid. In designing the procedures, the influence of these factors has been fixed by specifying the volume of solution, the amount of barium chloride added, the rate of addition, etc. As indicated by the curve for sulfates in Figure 1, these factors are very well balanced for percentages of calcium sulfate below 0.12. Above this value a slight negative correction is necessary.

Preliminary experiments concerning the calcium determination indicated that negative errors result from the solubility of calcium oxalate in the sodium chloride solution. A solubility as high as 36 mg. of calcium oxalate per liter of 10 per cent sodium chloride solution at 20° has been reported by Maljaroff and Gluschakoff (*3*). On the other hand, positive errors result from the occlusion of ammonium oxalate. In developing the standard procedure for this determination, these variables have been fixed by specifying the volume of solution, the amount of ammonium oxalate added, the period of digestion, the temperature of filtration, etc. To counteract the appreciable solubility of calcium oxalate in water, the precipitate is washed with a dilute ammonium oxalate solution and the ammonium oxalate solution remaining on the filter is removed with a saturated calcium oxalate solution. Errors due to the occlusion of magnesium by the calcium oxalate were found to be negligible, which is perhaps due to the fact that the increased solubility of magnesium oxalate in the sodium chloride solution reduces its tendency to precipitate with the calcium. A second precipitation was therefore deemed unnecessary.

The correction curve for calcium (Figure 1) indicates that for low percentages the solubility factors predominate, while for high percentages they are outweighed by the occlusion factors. Clarke and Wooten (*2*) also found that incomplete recovery of small amounts of calcium was obtained in the determination of calcium in lead-calcium alloys by the oxalate-permanganate method.

TABLE I. CONSTANT ERROR AND PRECISION DATA

No. of Determinations	Added	Mean of Values Found	Probable Error of Mean	Average Deviation from Mean
	%	%	%	%
		Sulfates (as $CaSO_4$)		
4	0.0217	0.0210	±0.0002	±0.0004
4	0.0617	0.0625	±0.0004	±0.0008
5	0.1217	0.1210	±0.0003	±0.0007
5	0.2017	0.2057	±0.0004	±0.0009
		Calcium (as $CaSO_4$)		
8	0.0200	0.0148	±0.0004	±0.0012
8	0.0600	0.0566	±0.0004	±0.0011
8	0.1200	0.1196	±0.0003	±0.0010
8	0.2000	0.2033	±0.0004	±0.0010
		Magnesium (as $MgCl_2$)		
4	0.0156	0.0169	±0.0002	±0.0004
4	0.0312	0.0355	±0.0004	±0.0007
8	0.0625	0.0686	±0.0003	±0.0009

The predominating source of error in the determination of magnesium was found to be the occlusion of 8-hydroxyquinoline. A negative correction (Figure 1) is therefore necessary for all percentages of magnesium chloride. The occlusion of 8-hydroxyquinoline has already been noted by Redmond and Bright (*4*).

Constant-Error Determinations

In order to determine the constant errors, if any, involved in the procedures presented above, determinations were made on samples of known composition which were prepared from the following materials:

C. P. (Baker's analyzed) sodium chloride was used as the basis of all "known" samples. In order to eliminate the possibility of interference from impurities in this salt, a portion of it was recrystallized three times from distilled water with about 50 per cent recovery in each crystallization. It was found that determinations made on samples prepared from the recrystallized salt were the same (within the limits of precision of the methods) as those made on samples prepared from the original material. The C. P. salt was therefore used without recrystallization in the remainder of the error determinations.

A saturated solution of C. P. (Baker's analyzed) calcium sulfate in distilled water was used as the source of sulfate. The sulfate content of this solution was determined by precipitating as barium sulfate and weighing. Independent standardizations checked to within 1 per cent error.

A solution containing about 10 mg. of C. P. (Baker's analyzed) calcium chloride per cubic centimeter was used as the source of

calcium. This solution was standardized by precipitating as calcium oxalate, igniting to calcium oxide, and weighing. Independent standardizations checked to within 1 per cent error.

A solution of C. P. magnesium sulfate containing about 1.5 mg. per cc. was used as a source of magnesium. This solution was standardized by precipitating as magnesium ammonium phosphate, igniting to magnesium pyrophosphate, and weighing. Independent standardizations checked to within 1 per cent error.

The results of determinations made on the known samples are given in Table I, and the correction curves (Figure 1) were plotted from these results. The computed values for the probable errors of the means in all cases justify the constant errors indicated by Figure 1.

The error in the determination of calcium was found to be independent of the presence of magnesium up to 0.06 per cent as magnesium chloride, and the error in the determination of magnesium was found to be independent of the presence of calcium up to 0.20 per cent as calcium sulfate.

Precision of the Methods

The precision to be expected from a single determination made according to these procedures may be calculated from the indicated values (Table I) of the average deviation from the mean. The largest average deviations obtained were 0.0009, 0.0012, and 0.0009 per cent for sulfate, calcium, and magnesium, respectively. The chances are about one in a thousand that a deviation will occur which is greater than four times this average. Therefore, an almost certain precision of ±0.0048 per cent for calcium and ±0.0036 per cent for sulfate and magnesium should be obtained in any single determination.

For any series of determinations the expected precision can be determined by dividing the value given for a single determination by the square root of the number of determinations made.

Table II. Typical Analyses

Determination No.	Calcium Sulfate	Calcium Chloride	Magnesium Chloride
	%	%	%
1	0.020	0.018	0.013
2	0.021	0.019	0.012
3	0.020	0.018	0.013

The results of three separate analyses of the same sample of salt are given in Table II. In this case the maximum deviation is only 0.001 per cent.

Literature Cited

(1) Assoc. Official Agr. Chem., Official and Tentative Methods of Analysis, 3rd ed., p. 428, 1930.
(2) Clarke, B. L., and Wooten, L. A., Ind. Eng. Chem., Anal. Ed., 5, 313 (1933).
(3) Maljaroff, K. L., and Gluschakoff, A. J., *Z. anal. Chem.*, 93, 265–8 (1933).
(4) Redmond, J. C., and Bright, H. A., U. S. Bur. Standards *Research Paper* 265; *Bur. Standards J. Research*, 6, 113–20 (1931).

Received August 7, 1936.

Applications of Confined Spot Tests in Analytical Chemistry

Preliminary Paper

HERMAN YAGODA, Fordham University, New York, N. Y.

THE use of paper impregnated with suitable reagents in establishing the presence of chemical constituents is probably one of the earliest developments in the art of analytical chemistry. Thus, as early as 23 to 79 A. D., Pliny records a method for detecting the presence of ferrous sulfate in verdigris using a test paper saturated with an extract from gallnuts.

Rhodian verdigris is subject to sophistication with powdered marble, pumice, or gum. The most successful adulterant, however, is shoemaker's black (ferrous sulfate), for the others can be detected by the gritty feel when ground between the teeth. To detect adulteration with shoemaker's black, place a portion on papyrus previously steeped in extract of gallnuts which blackens immediately in the presence of the adulterant (*1*).

The diverse chemical reactions resulting in the production of characteristic color phenomena have in recent years received considerable study by Gutzeit (*4*), Feigl (*3*), Tananaeff (*7*), and numerous other workers who have developed the methods for the detection of the elements by making use of the capillary properties of filter paper in enhancing the color reaction. Systems of qualitative analysis have been developed by Engelder (*2*), van Nieuwenburg (*6*), and Hynes (*8*) embodying these tests for the final identification of the different ions. These *Tüpfelreaktionen* or spot tests are made by adding a drop of the solution of the sample to a specially retentive paper (C. S. S. 601) impregnated with a suitable reagent. The presence of a given constituent is made manifest by the formation of an irregular colored area, or a series of colored zones on the test paper.

The writer has found it advantageous to confine the spot test within the compass of a uniform area of definite cross section, with the aid of a water-repellent barrier embedded in the fibers of the paper. By means of this technic it becomes possible to execute the tests on filter paper of the usual porosity without loss in sensitivity owing to the spreading of the spot over a large surface. Also, as a result of the uniformity both in the area and tint of the spot, it is possible to approximate the concentration of the ion from the intensity of coloration produced by the drop of solution.

Embedding of Rings

A large number of substances such as waxes, resins, and the cellulose esters can be employed in the formation of water-repellent zones on filter paper. Paraffin wax is recommended in this work, owing to its general inertness to chemical reagents and to the ease with which it can be embedded in diverse patterns on the paper. The paraffin rings are formed by warming the metal tube of the tool, *A* (Figure 1), over a small flame until the edge nearest the wooden handle becomes warm to the touch; the hot end is then brought to the surface of a slab of paraffin and the adhering film of molten wax is transferred to the sheet of filter paper. This method produces rings of sufficient uniformity for qualitative spot tests.

To make a series of enclosures of practically identical cross-sectional area, immerse a thin sheet of absorbent tissue paper in a bath of liquid paraffin, drain, cool, and lay the

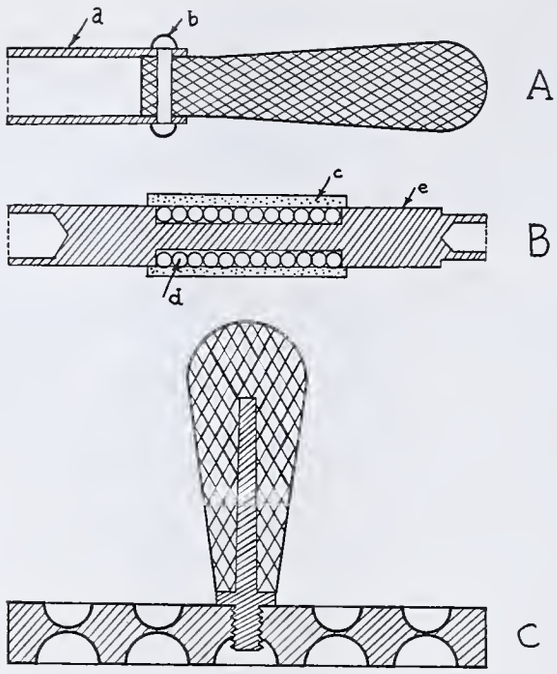

FIGURE 1. TOOLS FOR MAKING CONFINED AREAS

a. Brass or aluminum tube, 4 × 1.27 cm.
b. Copper bolt
c. Rubber tubing
d. Asbestos cord
e. Brass rod with 0.95- and 0.63-cm. holes

waxed sheet over the filter paper to be inscribed. By momentarily pressing the hot edge of the metal tube against successive parts of the waxed tissue, paraffin rings enclosing areas of uniform diameter are printed through the filter paper. The pressing operation is facilitated by supporting the filter and waxed sheets on a smooth pad of writing paper.

By means of tool *C* (Figure 1), it is possible to embed the paraffin so as to leave a series of confined absorbent areas on the filter paper in one printing operation. This instrument is made by drilling holes of the desired size in both sides of a flat piece of brass or aluminum measuring about 10 × 5 × 1.3 cm. (4 × 2 × 0.5 inches), and polishing the drilled surfaces so as to leave smooth printing faces. Provision should be made in the center of the slab for the location of a removable wooden handle. The tool is operated by warming the plate in a drying oven to about 70–80° C.; the handle is then inserted and the hot plate is pressed against a paraffined tissue as described above. The print made with this tool on the filter paper is represented in Figure 2.

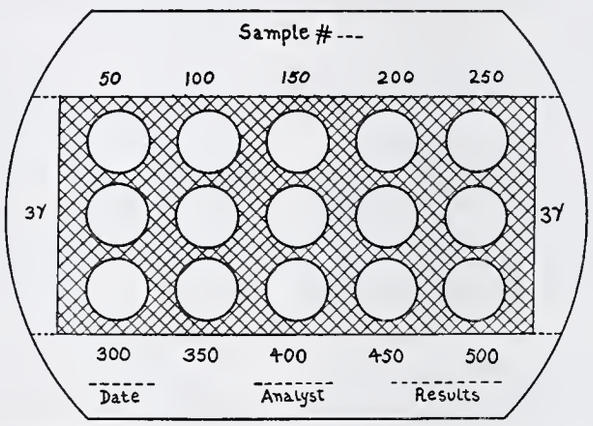

FIGURE 2. PARAFFINED PRINT MADE BY TOOL *C*

The exact size of the area confined by the paraffin varies with the temperature of the printing tool, the pressure, the time of contact, and the porosity of the filter paper. The diameter of the absorbent region is usually somewhat smaller than the dimension of the printing tool. Thus, in making a series of rings with the cylindrical tube, *A* (Figure 1), the confined areas measure between 12.7 and 12.2 mm. in diameter. In preparing test papers for quantitative analyses, it is advantageous to employ the metal slab, for though the above-mentioned variables are still present, the inward flow of the paraffin is the same for all the areas printed.

It is convenient to locate the rings on circular sheets of filter paper within a region bordered by an inscribed square, as shown in Figure 3. By folding the paper along the edges of the square the sides form a support for the region containing the absorbing spots. The resulting unit resembles a porcelain drop plate in appearance. Papers prepared in this fashion and impregnated with the proper reagents can be employed advantageously in determining the end points of volumetric processes that necessitate the use of external indicators.

Deposition of Reagent in the Test Papers

The filter paper employed in this method of analysis should be of a readily absorbent texture and when used for a quantitative analysis the surface should be as smooth as possible. The entire sheet of paper may be impregnated with a solution of the reagent and dried previous to the formation of the rings, or a definite volume of the reagent is permitted to evaporate within the confined areas on the untreated sheet. The latter procedure has the advantage that the amount of reagent deposited within a given area can be accurately determined from the volume and concentration of the solution permitted to evaporate within it. When the entire sheet is steeped in a solution, the reagent is deposited more uniformly over the surface of the dried paper, and this is an important factor in obtaining spots of uniform tint.

In making analyses by the confined spot method, the amount of reagent deposited within the absorbent area should be in sufficient excess to complete the reaction with the substance in the drop taken for analysis. When the entire paper is steeped in solution and dried, it is not possible to gage the surface concentration of the solid reagent by weighing the paper before and after the deposition because the sheet cannot be dried to constant weight. This quantity can be approximated by application of the following rule. The volume of liquid imbibed by a filter paper after being immersed in it and permitted to drain is approximately equal to the volume of the paper. Circular sheets of filter paper measuring 12.5 cm. in diameter and 0.020 cm. in thickness have a volume of 2.45 cc. Experiments revealed that the volume of water absorbed by such sheets averaged 2.35 ± 0.01 cc., which is in fair agreement with the theorem. After immersion in alcohol only 1.96 cc. of the liquid were found to be absorbed. This deviation from the rule is partly due to the evaporation of the alcohol during the weighing of the wet paper, but chiefly to the low viscosity and surface tension of the liquid which permit its more complete drainage from the paper.

This formulation is probably also valid for dilute solutions whenever the solute does not markedly alter the surface tension of the solvent. In working with the 1 per cent solutions of the reagents commonly used in spot analysis, it can be assumed that filter paper of 0.020-cm. thickness will retain after drying 160 γ or 180 γ of the solute per sq. cm., depending upon whether the paper is wetted with an alcoholic or an aqueous solution. A more exact value of this quantity can be ascertained from the weight of solution absorbed by several sheets of the paper.

Test Portions of Fixed Volume

The volume of small test portions taken from a solution can be ascertained by counting the number of separate drops

delivered by a clean pipet of calibrated volume. When filled with water or dilute aqueous solutions, the standard 1-cc. pipets deliver drops having an average volume of about 0.05 cc. which are suitable for making qualitative spot tests. To gage the concentration of a solution by the method described it is desirable to work with large drops in order to secure greater accuracy and to avoid irregularities in the tint of the spot. Such test portions can be obtained either through the use of calibrated micropipets, or by the diverse types of stalagmometers employed for the determination of the surface tension of liquids. Previous investigations (*5*) reveal that the volume of drops falling from an orifice can be ascertained with great accuracy by means of these special dropping pipets, but the elaborate precautions necessary for their dependable operation are not in harmony with the simplicity of the present method of analysis.

The simple stalagmometer shown at *A* (Figure 4) can be made by reconstructing a Folin-Wu pipet. The tube can be employed to obtain large drops of constant volume, provided the dropping surface is kept clean and the operator has a steady hand. The chief difficulty in its application is that often the drop will fall from the orifice before it has grown to equilibrium size as a result of too rapid formation or mechanical vibration. The capillary pipet illustrated at *B* is recommended for general use in transferring test portions of solution to the reacting areas. It is operated by filling to the mark with the solution and blowing the contents on to the circular area, keeping the tip at right angles about 2 to 3 mm. above the center of the spot. At the point where the contents are nearly emptied, the tip of the pipet should touch the globule of solution deposited on the absorbent spot, and should be withdrawn from the liquid on the appearance of the first air bubble. The pipet is calibrated by weighing the water delivered by it to a piece of filter paper printed with a confined area supported in a wide-mouthed weighing bottle, using the same technic as that described above. Several such determinations made with a 0.1-cc. pipet showed that the volume delivered could be reproduced with an accuracy of 0.3 per cent.

Limits of Discernibility

In order to obtain colored spots of sufficient uniformity of tint to permit the estimation of the quantity of the ion present in the test sample, the solution must be diluted to a point where the area of the confined spot contains a considerable excess of reagent over that necessary to complete the chemical reaction with the ion in question, and the quantity of the colored product formed must be large enough to be readily noticeable to the eye. With the two metals investigated in the present report, nickel and copper, it was found that a range of concentration between 100 and 10 γ per cc. was suitable. In making a series of test spots over this range of concentration a difference of 10 per cent in the concentration of two test solutions of equal volume could be readily discerned by the change in color intensity of two adjacent spots of equal area.

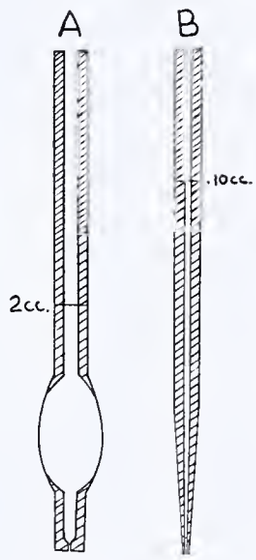

Figure 4. Pipets for Delivering Large-Sized Drops

There are several methods for adopting these properties to the estimation of the concentration of dilute solutions. In the first, the color made by a test portion of the sample is compared with the colors made by test portions of several solutions containing known quantities of the element being investigated. This method, though direct in the interpretation of the results, necessitates the preparation and storage of numerous solutions. Another possibility is to take advantage of the fact that the minimum quantity of an element detectable on a spot of fixed area is a fairly reproducible constant for a given observer. By diluting the solution in successive stages until the vanishing point is reached, the total quantity of an ion present in it can be calculated from the final volume and known concentration at that point. The method selected for investigation in the present report is a compromise between the two methods just mentioned, in that the solution being analyzed is diluted to a point where a test portion produces a spot which matches in color an adjacent spot produced with a standardized solution of the element.

The colors of adjacent spots are best compared after the test portions become dry. Small differences in the shade of intensely colored spots are readily discerned in transmitted light. The spots resulting from dilute solutions can be compared by a reflected light, as the precipitate is almost entirely deposited on the upper surface of the filter paper. In working at the dilutions necessary for the successful operation of this method of analysis, it is safe to assume that there will be no appreciable change in volume as a result of the mixing of the solution with solvent and that the final volume of the mixture will be equal to the sum of the component liquids.

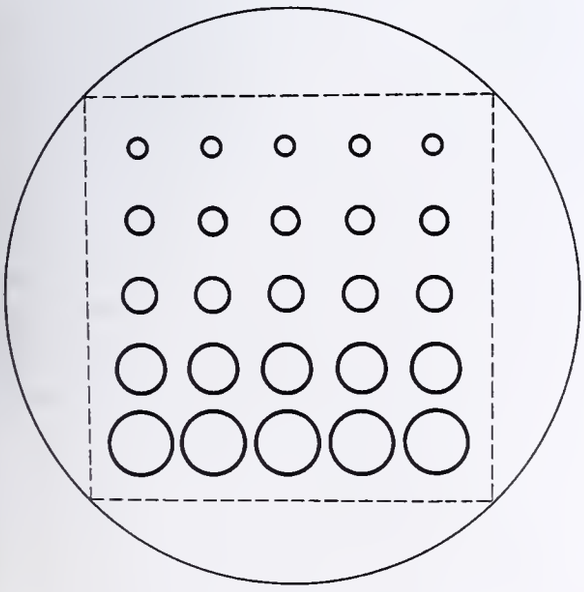

Figure 3. Paraffined Rings Formed with Tools *A* and *B*

Detection of Metallic Ions

The several salts of nickel and copper employed in these investigations were purified by crystallization. In the case of hydrates the crystals were permitted to dry at room temperature until the crop attained constant weight. Standard stock solutions of nickel and copper were prepared by dissolving weighed quantities of $NiSO_4 \cdot (NH_4)_2SO_4 \cdot 6H_2O$ and $CuSO_4 \cdot 5H_2O$ in water and diluting the solutions to definite volume. Gravimetric analyses of these solutions showed that they possessed the same metal content as that calculated from the weight of the dissolved salts, proving that standard solutions can be prepared for this work by dissolving known amounts of a pure salt of the metal in question.

The minimum quantities of the metals that can be detected on spots of varying area were determined by diluting portions

of the stock solution and transferring 0.029-cc. test portions to the absorbent areas. The test papers were impregnated with 1 per cent alcoholic solutions of dimethylglyoxime and α-benzoinoxime for use with nickel and copper, respectively. The results of these dilution experiments, recorded in Table I, show that by decreasing the diameter of the spot the presence of successively smaller amounts of the metals can be established in droplets of the same volume.

Table I. Detection of Nickel and Copper

Diameter of Spot	Ni^{++}	Cu^{++}
Mm.	γ	γ
12.7	0.090	0.32
9.5	0.067	0.26
6.3	0.050	0.17
4.8	0.036	0.12
3.2	0.021	0.075

Estimation of Nickel and Copper

To establish the amount of an element present in a sample, dissolve a weighed portion in water so as to make about a 0.1 per cent solution. If acid is employed to effect solution of the material, the excess should be removed by evaporation to near dryness or by a process of neutralization before diluting the solution to the desired strength. Prepare a test paper as shown in Figure 2, transfer a 0.1-cc. test portion of the solution to the first area on the top row, and pipet 50 cc. of the remaining solution to a dry 600-cc. beaker. Deposit test portions of known strength on the center row of spots containing either 2 or 3 γ of the element sought. The color of the spot made by the first test portion should be considerably darker than the standard spots. Dilute the solution pipetted into the beaker with successive 50-cc. portions of water, transferring test portions of each dilution product to the remaining areas on the paper. It is convenient to make the markings of the spots numerically equal to the total volume of the solution from which the test sample was taken. When the paper dries, compare the tint of the spots made at the successive dilutions with the color of the standards, noting at which dilution the intensities match.

The percentage of the element in the sample is then computed by means of the relationship:

$$P = \frac{v_0 V c}{10\, v_d w}$$

In this expression v_0 represents the volume of the solution containing the sample, v_d the volume of the aliquot taken for dilution, V the volume at which the test spot matches the standard spot, w the weight of the sample in milligrams, and c the concentration of the standard solution expressed in γ units of the element per cc. If v_0 is 100 cc., v_d is 50 cc., and c is 30 γ per cc., as in the case of the experiments recorded below, the above expression simplifies to $P = 6V/w$.

Table II. Determination of Nickel and Copper

Salt	Reagent	c	w	P	Error %
$NiSO_4 \cdot (NH_4)_2SO_4 \cdot 6H_2O$ (%Ni = 14.86)	Dimethylglyoxime	30	124.9	14.4	
		20	114.5	14.4	
		20	81.3	14.8	
			Av.	14.5 ±0.2	2.0
$CuSO_4 \cdot 5H_2O$ (%Cu = 25.5)	α-Benzoinoxime	30	103.6	26.1	
		30	97.1	24.7	
		30	84.2	25.0	
			Av.	25.3 ±0.6	0.8
$Cu(C_2H_3O_2)_2 \cdot H_2O$ (% Cu = 31.9)	α-Benzoinoxime	30	88.8	30.4	
		30	80.8	31.6	
		30	69.8	31.0	
			Av.	31.0 ±0.4	2.8

In Table II are recorded the results of several analyses of pure nickel and copper salts arrived at by following the above procedure. The difference between the observed and calculated figures is in the range of 1 to 3 per cent. This limits the applications of the method to analyses where speed is of greater importance than accuracy, or to circumstances where only minute fragments of a sample are available. It may be possible to reduce the error to about 1 per cent by making the test on porous filter paper of a smoother finish than that manufactured at present for filtration purposes.

The results obtained for copper indicated that the method can be used to determine the end point of an electrolytic copper determination by removing a test portion from the electrolyte and comparing the color of the spot with one of known copper content. If the test indicates that an appreciable amount of the metal is still in solution, the amount removed in the test sample can be corrected for if it is found to exceed the error in the weighing of the electrode.

Summary

By confining spot tests to regions of uniform area it is possible to approximate the amount of an ion present in a solution from the tint of the colored spot. By means of this technic it has been possible to determine the metal content of pure nickel and copper salts with an accuracy of 1 to 3 per cent. Work is in progress in the refinement of this method of analysis and its application to the determination of pH, the direct analysis of the mineral content of drinking waters, and the assaying of ores and alloys. This technic should also prove useful in biological analyses of the composition of blood and urine.

Literature Cited

(1) Baily, K. C., "The Elder Pliny's Chapters on Chemical Subjects," Vol. 2, p. 41, London, Edward Arnold & Co., 1929.
(2) Engelder, C. J., Dunkelberger, T. H., and Schiller, W. J., "Semi-Micro Qualitative Analysis," New York, John Wiley & Sons, 1926.
(3) Feigl, F., "Qualitative Analyse mit Hilfe von Tüpfelreaktionen," Leipzig, Akademische Verlagsgesellschaft, 1931.
(4) Gutzeit, G., *Helv. Chim. Acta*, **12**, 713, 829 (1929).
(5) Harkins, W. D., and Brown F. E., *J. Am. Chem. Soc.*, **38**, 249 (1916).
(6) Nieuwenburg, C. J. van, and Dulfer, G., "A Short Manual of Systematic Qualitative Analysis by Means of Modern Drop Reactions," Amsterdam, D. B. Centen, 1933.
(7) Tananaeff, N. A., "Drop Method of Qualitative Analysis," Kharkov and Kiev, Russia, 1934.
(8) Winkley, J. H., Yanowski, L. K., and Hynes, W. A., "A Systematic Semimicro Procedure for the Qualitative Analysis of the Commoner Cations," *Mikrochemie*, in press.

Received August 29, 1936.

Rapid Cleaning of Mercury

H. F. EASLY, University of Pittsburgh, Pittsburgh, Pa.

After trying several well-known methods without success, to clean 25 or 35 pounds of mercury mixed with grease, metallic impurities, floor sweepings, etc., the following procedure was tried with very good results:

Take a 500-cc. glass-stoppered wide-mouthed bottle and fill half-way with dirty mercury; add 25 or 50 grams of mercurous nitrate crystals with about 10 cc. of water, and shake for about 5 minutes. Pour out into a dish and allow the water from the faucet to wash away the impurities. Then pass the mercury through several folds of toweling to dry it and it is ready for use again.

As mercury is one of the least active of the metals, it is assumed that the metals in the mercury as impurities replace the mercury in the compound $HgNO_3$:

$$Cu + 2HgNO_3 \longrightarrow Cu(NO_3)_2 + 2Hg$$

The cleaning mixture will stain the hands black, if allowed to touch them.

Received December 2, 1936. Contribution No. 330 from the Department of Chemistry, University of Pittsburgh.

The Iron Content of Grapes and Wine

JOHN BYRNE, L. G. SAYWELL,[1] AND W. V. CRUESS
Fruit Products Division, University of California, Berkeley, Calif.

IN ALL wine-making regions of the world wine often becomes hazy or cloudy owing to the formation of a finely divided, colloidal precipitate caused by the presence in the wine of an excess of iron salts. The problem is of considerable economic importance in California and is one to which much attention has been given in this laboratory.

von der Heide (*5*), until his death a member of the staff of the Geisenheim Enological Station in Germany, has published an excellent review of the literature and knowledge of the iron problem in relation to wine making. He states that grapes and the wines made from them contain small amounts of iron naturally, but does not indicate the amounts normally present. He calls attention to the fact that considerable iron may be dissolved by the must from dust and soil adhering to the grapes at the time of crushing.

de Castella (*2*) of Australia in a bulletin on the casse of wine states that wine normally contains in the neighborhood of 10 parts per million of iron and that when this proportion is much exceeded clouding is apt to occur. Brown (*1*) found that normal California grape juice contained from 5 to 10 p. p. m. of iron. He reports grape juices made in California containing as much as 150 p. p. m., evidently dissolved by contact with iron equipment. Mathieu (*7*) and Grandchamp (*4*) as well as many other authors on wine, discuss the "iron problem" and various methods of solving it, but give very little information concerning the normal iron content of grapes and wine. Sherman (*10*) gives the iron content of whole grapes (variety not stated) as 0.0013 per cent or 13 p. p. m. Fabre and Bremond (*3*) give the normal iron content of wines made from Carignane grapes in Algeria as 10 to 12 p. p. m. Wine that came in contact with iron equipment or was stored in concrete tanks greatly increased in iron content attaining as much as 60 p. p. m.

Marotta (*6*) reports that juice of grapes of the Herault district of France contained from 1 to 4 p. p. m. of iron and that the iron content of grapes is unaffected by the nature of the soil. Wines made commercially from the same grapes contained 5 to 39 p. p. m. of iron, indicating that much iron was dissolved by the must and wine during vinification.

In the present investigation samples of grapes from several of the important grape-growing districts of California were collected. The must of each was analyzed for iron content by wet-ashing a 2-cc. sample with perchloric and sulfuric acids, followed by determining the iron present colorimetrically, using *o*-phenanthrolene in the presence of hydroxylamine hydrochloride. The details are given by Saywell and Cunningham (*9*).

A number of other samples of crushed grapes or the juices expressed from them were fermented in glass and the iron content of the resulting wines was determined. These wines were made in four ways from each sample: One was made with juice only, fermented with pure wine yeast; one with juice only, plus 100 p. p. m. of sulfur dioxide; one by fermentation on the skins with pure yeast; and the fourth by fermentation on the skins in the presence of 100 p. p. m. of sulfur dioxide. For comparison with these wines made out of contact with iron, the iron content of a number of new commercial wines of the same vintage (1935) was determined. The data from the three sets of samples are presented in Tables I, II, and III.

The juices reported in Table I varied considerably in iron content; those from grapes that were obviously dusty were higher in iron than those in normal condition. Practically all grapes contain on their surface more or less dust; in expressing the juice some of the dust unavoidably enters the juice and increases the iron content. The average iron content of the juices of the 59 samples reported in Table I was 8.6 p. p. m.; of the additional 16 samples reported in Table II, it was 9 p. p. m. Locality did not appear to affect the iron content of the juice in any consistent manner, as judged by the limited number of samples available for comparison (see particularly analyses of Zinfandel, Alicante Bouschet, Muscat, and Thompson seedless).

The data of Table II show conclusively that there is a very striking decrease in iron content of the juice during fermentation. The average iron content of the 16 juices in Table II was 9.0 p. p. m., of the wines made from the juice alone, 1.9 p. p. m., and of the wines made by fermentation on the skins, 1.7 p. p. m. The average iron content of the whole grapes was 11.9 p. p. m. It was not determined whether the iron was utilized by the yeast in its tissues, or precipitated as an insoluble salt; this point is under investigation and will be reported upon later. Whether or not sulfur dioxide was used apparently did not affect the iron decrease during fermentation.

TABLE I. IRON CONTENT OF JUICES OF FRESH CALIFORNIA GRAPES

(Arranged according to variety. 1935 season)

Sample Number	Grape Variety	Locality	Iron *P. p. m.*
18	Zinfandel	St. Helena	12.0
19	Zinfandel	St. Helena	12.0
20	Zinfandel	St. Helena	12.5
21	Zinfandel	St. Helena	6.0
22	Zinfandel	St. Helena	9.0
24	Zinfandel	St. Helena	3.0
1	Zinfandel	Lodi	8.5
29	Zinfandel	Lodi	5.0
33	Zinfandel	Lodi	10.0
3	Alicante Bouschet	Lodi	8.5
23	Alicante Bouschet	St. Helena	10.0
52	Alicante Bouschet	Fresno	3.0
62	Alicante Bouschet	Fresno	8.5
63	Alicante Bouschet	Fresno	12.0
64	Alicante Bouschet	Fresno	7.5
2	Carignane	Lodi	5.0
5	Sultana	Lodi	6.0
43	Sultana (dusty)	Tulare	16.0
44	Sultana (dusty)	Tulare	15.0
11	Semillon	Livermore	5.5
12	Semillon	Livermore	8.0
16	Semillon	Geyserville	1.5
6	Muscat	Lodi	9.0
54	Muscat	Fresno	8.0
55	Muscat	Fresno	3.0
57	Muscat	Fresno	5.0
58	Muscat	Fresno	7.0
61	Muscat	Fresno	6.0
25	Thompson seedless	Lodi	11.5
28	Thompson seedless (dusty)	Lodi	23.0
30	Thompson seedless (dusty)	Lodi	8.0
32	Thompson seedless (dusty)	Lodi	23.0
34	Thompson seedless	Lodi	9.0
36	Thompson seedless	Lodi	17.0
37	Thompson seedless	Lodi	4.0
38	Thompson seedless	Lodi	5.0
39	Thompson seedless	Kingsburg	7.0
40	Thompson seedless	Kingsburg	13.0
41	Thompson seedless	Kingsburg	17.0
59	Thompson seedless	Fresno	3.0
10	Golden Chasselas	Livermore	2.5
17	Golden Chasselas	Geyserville	3.5
26	Golden Chasselas	Lodi	11.0
27	Tokay	Lodi	12.0
31	Tokay	Lodi	14.0
35	Tokay	Lodi	7.0
49	Malaga	Fresno	4.0
50	Malaga	Fresno	4.0
53	Malaga	Fresno	4.0
60	Malaga	Fresno	12.0
13	Pinot	Asti	9.5
14	Pinot	Asti	9.5
15	Pinot white	Asti	8.5
7	Petite sirah	Livermore	10.0
8	Sauvignon blanc	Livermore	5.0
9	Sauvignon blanc	Livermore	8.0
42	Ribier	Kingsburg	10.0
51	Ribier	Fresno	4.0
45	Salvatore (dusty)	Tulare	17.0
Average			8.6

[1] Present address, Pacific Can Company, San Francisco, Calif.

Table II. Iron Content of Grapes and Wines Made from Them in Glass

Grape Type and District	Iron Content: Juice	Wine from juice alone: SO_2	Wine from juice alone: No SO_2	Juice + seeds + skins, whole grapes	Wine from juice + seeds + skins: SO_2	Wine from juice + seeds + skins: No SO_2
	P. p. m.					
Carignane, Lodi	12.0	2.5	1.9	11.5	2.0	2.1
Zinfandel, Lodi	15.7	3.3	2.1	26.6	2.5	2.7
Tokay, Lodi	1.0	1.5	1.5	1.5	1.0	0.8
Mission, Lodi	6.0	1.6	1.6	6.0	1.3	1.7
Semillon, Livermore	9.5	1.0	1.5	10.5	1.8	1.6
Burger, Livermore	14.0	1.1	4.5	23.0	1.0	1.6
Mourastel, Livermore	6.5	1.7	1.3	10.5	0.8	1.4
Zinfandel, Geyserville	12.1	2.9	3.6	11.0	2.0	2.1
Grand Noir, Geyserville	2.5	2.8	2.4	12.0	2.1	2.2
Alicante, Napa	14.0	2.1	2.0	15.4	2.5	2.1
Alicante, Fresno	13.4	2.2	1.7	17.7	2.1	2.2
Thompson, Fresno	9.8	1.7	1.5	13.0	2.0	1.7
Sultana, Fresno	10.0	1.9	1.7	12.0	2.0	1.7
Muscat, Fresno	7.0	1.7	1.7	7.5	1.2	1.0
Muscat, Fresno	5.0	1.0	1.0	6.8	1.0	1.5
Carignane, Fresno	6.0	2.0	1.0	6.5	1.5	1.2
Average	9.0	1.9	1.9	11.9	1.7	1.7

In Table III is given the iron content of a number of "natural" new wines—i. e., those that had not been fortified by the addition of brandy—and also of a similar number of fortified new wines including sherries, muscatel, port, and angelica types. Most of the wines had received no treatment beyond normal fermentation, or fermentation and fortification. A few had been clarified with bentonite (*8*). Evidently some of the unfortified new wines had dissolved from contact with the metal equipment of the winery considerable to large amounts of iron, one sample containing 35 p. p. m. The average iron content of the 55 samples was 5.4 p. p. m., which is about 3 times that of the wines made out of contact with iron, as reported in Table II. Iron pickup during vinification is indicated. The fortified wines were considerably lower in iron than were the unfortified. Fortified wines of the Fresno-Tulare-Kingsburg district are much lower in acidity than the unfortified wines of the Geyserville district and on this account they may have exerted less solvent effect on the iron of crushers, pipe lines, etc. However, the principal conclusion to be drawn from comparison of the data of Tables II and III is that wines made under commercial conditions have on the average several times the iron content of wines made out of contact with iron.

Table III. Iron Content of Some Californian Commercial Wines

(1935 vintage)

Sample	Type	District	Iron	Treatment
			P. p. m.	
1	White, dry	Geyserville	6.0	None
2	White, dry	Geyserville	3.0	None
3	Sherry material	Geyserville	2.5	None
4	White, dry	Geyserville	5.0	None
5	Red, dry	Geyserville	20.0	None
6	White, dry	Geyserville	2.0	None
7	Muscat	Geyserville	2.0	None
8	Port	Geyserville	6.0	None
9	Red, dry	Geyserville	17.0	None
10	Angelica	Geyserville	1.5	None
11	Red, dry	Geyserville	25.0	None
12	Port	Geyserville	7.0	None
13	Port	Geyserville	8.0	None
14	Red, dry	Geyserville	35.0	None
15	Sherry	Geyserville	6.0	None
16	Red, dry	Geyserville	25.0	None
17	White, dry	Geyserville	1.0	Fined with bentonite
18	Sherry material	Geyserville	6.0	Fined with bentonite
19	Red, dry	Geyserville	2.5	Fined with bentonite
20	Red, dry	Geyserville	7.0	Fined with bentonite
21	Red, dry	Geyserville	2.3	Fined with bentonite
22	Red, dry	Geyserville	2.0	Fined with bentonite
23	White, dry	Geyserville	1.5	None
24	White, dry	Geyserville	1.5	Fined with bentonite
25	Red, dry	Geyserville	7.0	Fined with bentonite
26	Red press	Geyserville	8.0	Fined with bentonite
27	Red, dry	Geyserville	5.0	Fined with bentonite
28	Red, dry	Geyserville	8.0	Fined with bentonite
29	Red, dry	Geyserville	2.0	Fined with bentonite
30	Malaga	Fresno	6.0	None
31	Thompson	Fresno	3.0	None
32	Muscat	Fresno	1.5	None
33	Sherry material	Fresno	2.0	None
34	Muscat	Fresno	2.5	None
35	Thompson	Fresno	1.2	None
36	Sherry material	Fresno	4.0	None
37	Sherry material	Fresno	1.0	None
38	Angelica	Fresno	1.0	Racked
39	Port	Fresno	4.0	Fined with bentonite
40	Muscat	Fresno	1.5	Fined with bentonite
41	Angelica	Fresno	1.5	Fined with bentonite
42	Muscat	Fresno	1.5	Fined with bentonite
43	Port	Fresno	2.0	Racked
44	Sherry material	Fresno	2.5	None
45	Muscat	Kingsburg	1.0	None
46	Muscat	Kingsburg	1.5	None
47	Alicante	Kingsburg	1.5	None
48	Muscat	Kingsburg	1.3	None
49	Sherry material	Kingsburg	2.5	None
50	Alicante	Tulare	7.5	None
51	Sherry material	Tulare	3.5	None
52	Sherry material	Tulare	5.5	None
53	Muscat	Tulare	6.5	None
54	Muscat	Tulare	3.0	None
55	Angelica	Tulare	1.4	None
Average			5.4	

It has been observed that California wines vary markedly in respect to the minimum iron concentration required to cause clouding. White wines such as sauterne, Chablis, and Riesling types will usually develop "iron casse" (cloudiness due to precipitated iron compounds) at considerably less than the 10 p. p. m. minimum mentioned by de Castella (*2*) for Australian wines. Clouding has been observed at 5 p. p. m. of iron in such wines. The stability of red wines such as claret and Burgundy types is apparently relatively unaffected by the concentration of iron normally encountered in California wines.

Excess iron can be removed by fining the affected wine with casein or with potassium ferrocyanide. When used in excess the latter remains in the wine and in part decomposes to liberate hydrocyanic acid. On this account its use is not to be encouraged and is prohibited in most wine-producing countries. The addition of a small amount of citric acid to white wines will usually prevent iron casse and is the standard preventive measure in France.

Summary

The iron content of the juice of California grapes ranged from 1.5 to 23 p. p. m., depending upon the degree of contamination with dust or soil.

The iron content markedly decreased during fermentation, e. g., from an average of 9.0 p. p. m. to an average of 1.8 p. p. m. Addition of sulfur dioxide before fermentation did not affect the decrease in iron during fermentation.

The average iron content of commercially made wines was approximately three times that of wines made in the laboratory in glass, indicating solution of iron by the juice and wine from iron equipment.

Literature Cited

(1) Brown, J. G., *Fruit Products J.*, 11, 274–5 (1932).
(2) Castella, F. de, Dept. Agr. Victoria, Australia, *Bull.* 48, new series (1925).
(3) Fabre, J., and Bremond, E., *Ann. fals.*, 20, 213–17 (1927).
(4) Grandchamp, L. E., *Chimie & Industrie*, Special No., 675–6 (May, 1924).
(5) Heide, C. von der, *Wein u. Rebe*, 14, 325–35, 348–59, 400–408; 15, 5–19, 35–44 (1933).
(6) Marotta, D., *Ann. chim. applicata*, 19, 148–64 (1929).
(7) Mathieu, L., *Chimie & Industrie*, Special No., 627–8 (September, 1926).
(8) Saywell, L. G., Ind. Eng. Chem., 26, 981–2 (1934).
(9) Saywell, L. G., and Cunningham, B. B., Ind. Eng. Chem., Anal. Ed., 9, 67 (1937).
(10) Sherman, H. C., "Food Products," p. 348, New York, Macmillan Co., 1915.

Received September 5, 1936.

The Principle of the Suspended Level

Applications to the Measurement of Viscosity and Other Properties of Liquids

LEO UBBELOHDE
Technical Chemical Institute, Technische Hochschule, Berlin, Germany

As a physical constant of substances and because of its relation to the theory of liquids, viscosity has become increasingly important both in industry and in scientific research. Viscometers for its determination have not kept pace with the need for exactness. Examined critically, even the best instruments in use possess inherent defects which cannot be eliminated. As a result, many viscosity data now in the literature are erroneous and true values or corrections are practically impossible to estimate. In industry various empirical units measured by a variety of devices have come into use, but these values do not meet present requirements for accuracy and convenience.

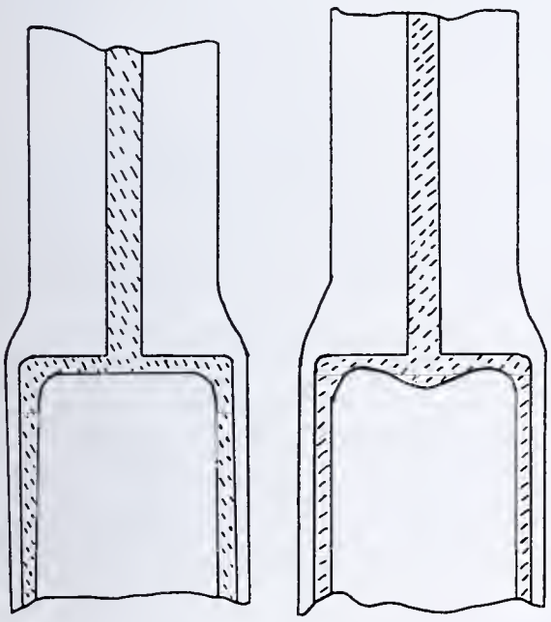

Figure 1

A phenomenon heretofore unnoticed—namely, the suspended level—has made it possible to remedy this by refining to an extraordinary degree the measurement of properties of liquids and a simple and accurate type of viscometer has been developed employing it. The application of this principle opens new possibilities in the determination of static and dynamic surface energy as well as viscosity, and sheds new light on other problems of flowing films, important alike in colloid chemistry and biology and in the lubrication of bearings.

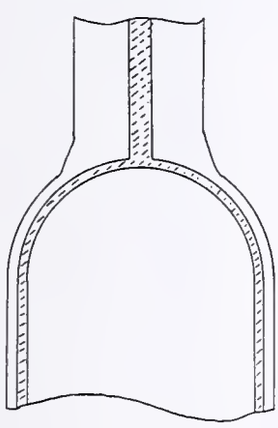

Figure 2

In viscometers, it has been customary to allow the liquid under examination to flow through a capillary tube discharging either into the air or into a mass of liquid. In each of these situations the effective pressure driving the liquid through the capillary is influenced by the surface tension of the film lying on the surface of liquid at the higher level, and by the surface tension effect either on the stream emerging from the capillary or on the surface of the liquid in the lower reservoir. These effects have introduced indeterminate errors into the calculation of viscosity from the time of flow. Further uncertainty has been introduced by failure to recognize and correct for the kinetic energy of the flowing liquid.

Application of the Suspended Level

Application of the principle of the suspended level allows one to balance corrections for these factors against each other and to design an instrument whose dimensions are so proportioned as to avoid others. The suspended level is the term used to designate the hanging surface of a liquid. This film has been formed with a plane surface (Figure 1, left), a domed surface, convex downward (Figure 1, right), and a hemispherical surface, concave downward (Figure 2). It is formed at the point where a vertical capillary expands into a relatively large tube by the layer of liquid spreading upon the interior surface of this junction. The suspended level is so called to distinguish it from the recumbent level formed by the film lying on the surface of a liquid.

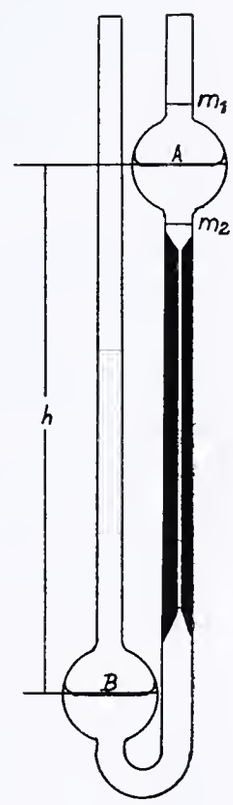

Figure 3

The suspended level becomes an ideal auxiliary for hydrodynamic and hydrostatic measurements. Applied to viscometers it yields an entirely new type of apparatus in which the customary recumbent surface lying on the liquid is replaced by a suspended one. If this suspended level is made to take the form of a hollow hemisphere, even corrections for surface tension become unnecessary. This frees viscometers of their hitherto inescapable defect, inaccurate adjustment of level, and by the use of a simple air inlet tube for producing the film at will creates an instrument of unsurpassable simplicity and outstanding accuracy.

Correction for the kinetic energy of flow, necessary in all previous instruments, must be applied. This correction has usually been neglected, although this may introduce errors far exceeding all others and may occasionally make the instruments practically useless. This neglect can be understood when the difficulty in applying the correction is realized. The elimination of these defects was accomplished by a new proportioning of dimensions which determines the magnitude of the correction and allows the corrected time of flow to yield kinematic viscosity directly in centistokes when merely multiplied by a power of ten—that is, by the mere insertion of a decimal point. To construct viscometers for this purpose requires an accuracy of dimension in glass within 0.01 mm. The resulting instrument is so easily used and so free from error that no excuse remains for doubtful values of viscosity.

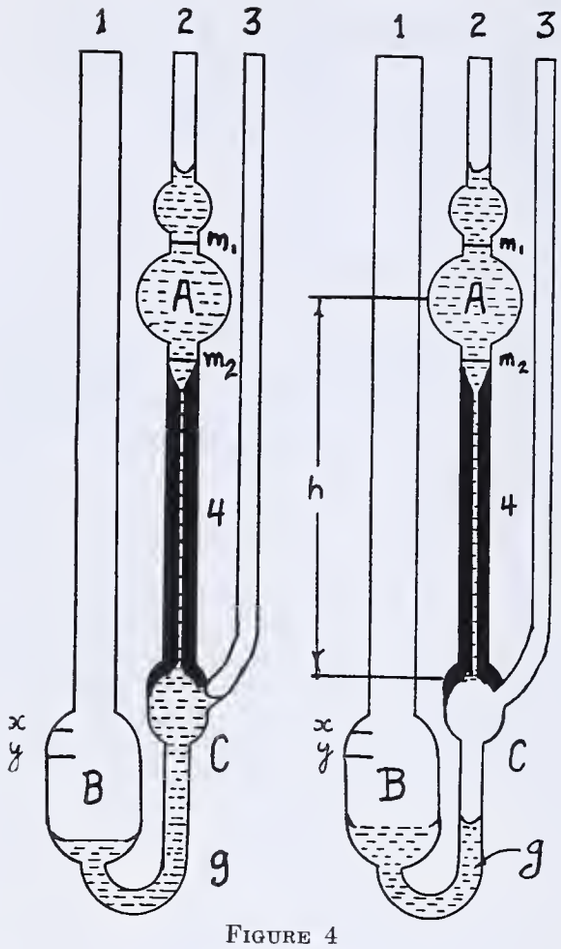

FIGURE 4

An instrument for the direct determination of dynamic viscosity has been built which avoids error from fluctuations in the imposed pressure by employing the suspended level principle. In the same way the measurement of capillary rise has materially increased the accuracy of determining static surface tension. On the basis of theoretical considerations, the same principles have been applied to form layers deliberately curved and a new method has been obtained for measuring dynamic surface tension. This permits examination of interfaces for the formation of layers, anisotropic arrangements of molecules, and allied phenomena, upon which depend answers to problems of biology and structure of materials, as well as the very practical problems of friction in bearings.

Viscometers

In all relative viscometers the main difficulty lies in the adjustment of the liquid column to a precise height. In the Ostwald instrument (Figure 3) this adjustment is accomplished only with difficulty, and with some liquids is impossible. The effective height of the liquid column is indefinite in pipet instruments as well as in viscometers adjusted by overflow. In all such devices the source of error lies primarily in the lower level as well as in the varying effect of surface tension. Attempts at refinement of these devices already undertaken appear to introduce complications without achieving the desired results; hence, further effort at improvement may well be abandoned.

With a plane suspended level, surface tension acts perpendicularly to the vertical capillary, which is the direction of flow, and hence does not affect the height of the liquid column. In every viscometer a second liquid surface exists in the upper bulb in which surface tension acts on the height of the column. Since all liquids wet the walls of this upper bulb, the meniscus formed exerts an upward pull against the vessel walls because of surface tension, and thus tends to diminish the effective height of the liquid column. Theoretical considerations, which have been amply proved by experiment, lead to the conclusion that by properly curving the surface layer at the suspended level, an amount of traction can be there developed acting in the direction opposite to the tension on the surface of the liquid in the upper bulb and balancing it.

These considerations may be summarized as follows:

1. The suspended level, regardless of whether plane or curved, assures the development of a suspended layer of liquid at the same location independent of kinematic viscosity, specific gravity, and other properties of the liquid.
2. By using a plane suspended level the effect of surface tension at the foot of the column can be eliminated.
3. By forming the suspended level in a hemispherical layer, such an amount of traction can be applied through surface tension as to balance that exerted at the upper meniscus.

The foregoing conclusions have been subjected to careful mathematical and hydrodynamic analyses and have been proved by experiment. From them has been developed a practical form of apparatus for measuring the properties of liquids, particularly viscosity, surface tension, and related constants of liquids. The instruments and their use are described below.

A New Viscometer

At the lower end of the pipet-like bulb, A (Figure 4), having the two marks, m_1 and m_2, is attached a capillary which terminates in a wide tube, C, about 12 mm. wide. The lower, funnel-like end of the capillary is located on the axis of tube C and on this the suspended level is developed. Tube C is connected by a bent tube, g, to the lower bulb, B. This bulb is open to the atmosphere through tube 1, and tube C is in such communication through 3.

Bulb B is filled with liquid through tube 1 until the surface of the liquid lies about between marks x and y (not marked on the glass instrument). Suction is applied to tube 2, while the top of tube 3 is closed by a finger, and tube C, capillary 4, and bulb A are thus filled with liquid, as shown in Figure 4 (left). When tubes 2 and 3 are opened, air passes through tube 3 into C and immediately divides the liquid into two parts, as shown in Figure 4 (right). In this way the suspended level is developed on the lower end of capillary 4. The liquid meanwhile begins to flow out of bulb A through the capillary. However, it does not again fill C, but flows in a thin layer down its vertical wall and joins

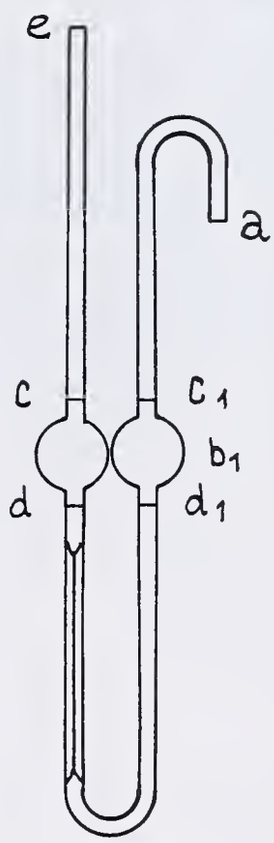

FIGURE 5

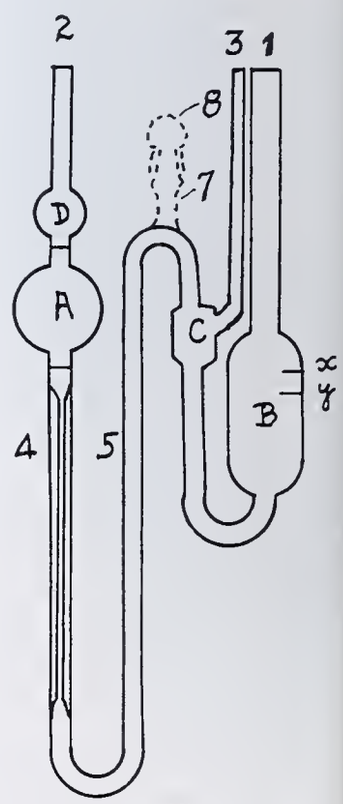

FIGURE 6

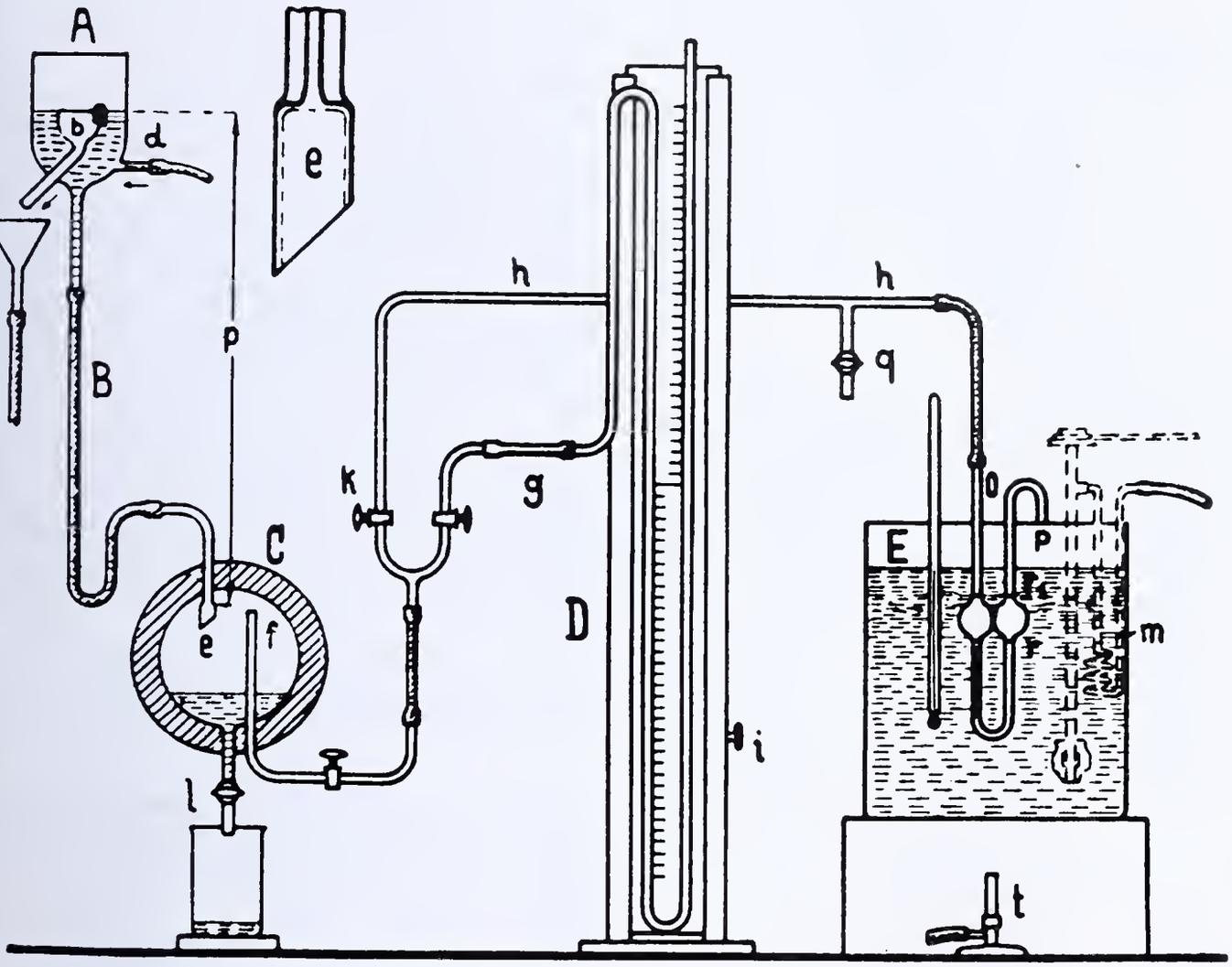

FIGURE 7

the liquid remaining in g and B. The time is determined during which the surface of the liquid drops from mark m_1 to mark m_2. The method of operation is thus as simple as can be imagined.

The viscometer (*9*) greatly resembles the diagrammatic representation, except that it is more compact, since the three tubes are arranged in a triangle instead of in a plane. The glass body is enclosed in a cage comprised of two circular sheets and three rods of metal, to protect it as far as possible against breakage.

Capillaries of three different diameters are supplied, the dimensions being so selected that the flow period measured need only be multiplied by a power of 10 to yield the kinematic viscosity directly. These are supplied with the calibration factor etched on.

For a capillary 9 cm. long, a volume of 5.67 cc. in bulb 4, and an average column height of 13 cm., the calibration constant $K = 0.01$ requires the radius of capillary I to be 0.0318 cm. For capillary II with $K = 0.01$, this radius is 0.0565 cm., and for capillary III with $K = 1.0$, 0.1005 cm.

Since small deviations from the theoretical radius of the capillary appear as the fourth power in the calculated viscosity, they are made by the KaPeG process of the firm of Schott & Gen., Jena, which forms capillaries with a radius up to 0.05 cm. with an accuracy of ±0.001 cm. The production of the hemispherical junction between 4 and C on which the suspended level forms is also based on the KaPeG process and can, only in exceptional cases and with the greatest pains, be made with a blast lamp. Manual production requires very careful selection of product and produces an excess of rejects.

TABLE I. CORRECTIONS FOR ENERGY OF FLOW

(Corrections apply to capillaries I, II, and III having calibration constants K = 0.01, 0.10, and 1.0, respectively. The table also applies when K deviates somewhat from these figures.)

Flow Period Observed	Seconds to Be Deducted from Flow Period for Capillaries I	II	III
Sec.	*Sec.*	*Sec.*	*Sec.*[a]
20	(14.1)	(1.41)	0.14
25	(11.2)	(1.12)	0.11
30	(9.34)	(0.93)	0.1
35	(8.1)	0.81[b]	0.08
40	(7.0)	0.7[b]	0.07
45	(6.27)	0.63[a]	0.06
50	(5.6)	0.56[a]	0.06
55	(5.1)	0.51[a]	0.05
60	(4.68)	0.47[a]	0.05
70	(4.01)	0.4[a]	0.04
80	3.5[b]	0.35[a]	0.04
90	3.1[b]	0.31[a]	0.03
100	2.8[b]	0.28[a]	0.03
120	2.34[a]	0.23[a]	0.02
140	2.00[a]	0.20[a]	0.02
160	1.75[a]	0.18[a]	0.02
180	1.56[a]	0.16[a]	0.02
200	1.4[a]	0.14[a]	0.01
250	1.12[a]	0.11[a]	
300	0.94[a]	0.09[a]	
350	0.80[a]	0.08[a]	
400	0.70[a]	0.07[a]	
450	0.63[a]	0.06[a]	
500	0.56[a]	0.06[a]	

[a] Error does not exceed 0.2 per cent.
[b] Error does not exceed ±0.1 per cent.
Figures in parentheses are doubtful (*6*).

Calibration

The calibration of these viscometers is conducted at a temperature of 20° ± 0.001° C. in a thermostat of greatest precision. The time of flow of the purest water through capillary I (theoretical calibration constant of 0.01) is determined. From

this flow period is calculated the calibration constant, which may deviate from the theoretical figure. A correction is made by diminishing or increasing the average column height by raising or lowering bulb A by the needed amount. After this has been done by the glass blower, the flow period of water is again determined in capillary I, and from it the true calibration constant, K, is determined. Usually it deviates from the theoretical figure only in the fourth decimal. Capillary I is thus calibrated precisely.

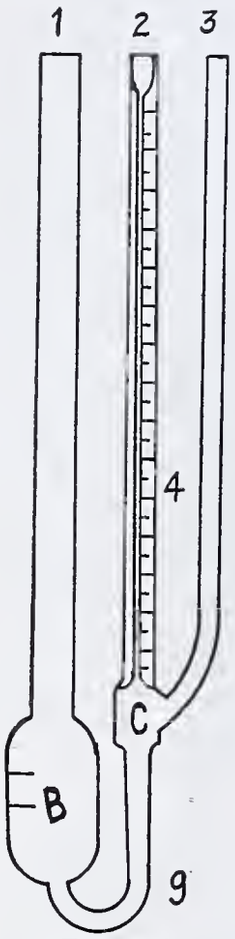

FIGURE 8

Correction of Observed Time

To the flow period of water and liquids of similar viscosity, the Hagenbach-Couette correction must be applied. This is done by deducting a predetermined number of seconds from the observed flow period. Table I shows such corrections for the value $m = 1.12$ in the Hagenbach-Couette correction member. In making measurements on mineral oils or liquids of similar viscosity, the correction as shown by Table I is ordinarily so small that it can be neglected entirely.

By accurately determining the viscosity of a calibrating oil in capillary I (already precisely calibrated and with the correction for energy of flow), other capillaries can be calibrated. The flow period of this oil in this capillary is so great that the correction for energy of flow can be neglected. Capillary II is now calibrated accurately (as above) with this calibrating oil. This procedure is repeated with capillary III, using an oil of still greater viscosity.

Once a sufficient number of the calibrating oils have been precisely calibrated, it naturally is unnecessary to repeat the original calibration with water. Thus even with capillary I the correction for energy of flow is avoided in the determination of the calibration constant, K.

The principal errors which may occur in the precise calibration of viscometers are caused by small fluctuations of temperature. These so affect the viscosity of the various calibrating liquids that marked errors may occur in the values determined. In order to prevent these errors as far as possible, the author has built and used a thermostat which can be kept for any desired time at 20° ± 0.001° C.

Determination of Dynamic Viscosity

As a rule it is advantageous to determine the kinematic viscosity ν directly, and by multiplying it by the density, to calculate the dynamic viscosity, η. For this purpose the apparatus described above, functioning under its own pressure, can be used with materially greater accuracy than the following forms, which are complicated by employing outside pressure sources. Only where it is necessary to determine dynamic viscosity directly or to investigate displacement elasticity is the use of instruments with outside sources of pressure unavoidable.

The author's older double-bulb apparatus (*1*, *7*) is filled with the test liquid until it initially reaches from C to d_1 (Figure 5). Excess pressure is then applied to C, the liquid being thus forced into the other bulb. Since both bulbs are located at the same height, and the difference in level between them is just reversed during the experiment the effects of the internal pressure and of the density of the liquid balance each other.

Some pains are required to fill the apparatus to the exact point. Since this instrument has been recommended by a number of authors and much used in colloid chemical investigations, it has seemed worth while to make it more convenient to use by applying the suspended level. This model is shown in Figure 6. However, it is difficult to clean, since the apparatus cannot be drained completely, no matter how it is suspended. This disadvantage can be overcome by attaching tube 7 (shown by broken lines) and closing it during the experiment with cap 8. When the contents are to be emptied, the cap is removed and the instrument suspended upside down.

The apparatus is filled through tube 1 with the test liquid until its surface lies between the marks x and y on vessel B. Tube 3 is then closed by the pressure of a finger, and suction is exerted at 2 until the liquid has successively filled C, 5, 4, A, and D. If tube 3 is now opened, the suspended level is formed in C at an elevation half-way up on A. During the measurement of the viscosity, the surface in A then varies around the middle position, whereby the density of the test liquid may be left out of consideration.

With both instruments shown (Figures 5 and 6) the density of the liquid can be neglected and the calculation of dynamic viscosity is reduced to the simplest formula:

$$\eta = ptk$$

In this formula t is the outflow period; p, the imposed pressure; and k, the calibration factor. The formula requires that the product of pressure and flow period be constant—that is, that $pt = p_1t_1$. This, however, presupposes constant volume and is true if the calibration and the measurement are both done with the same height of liquid column.

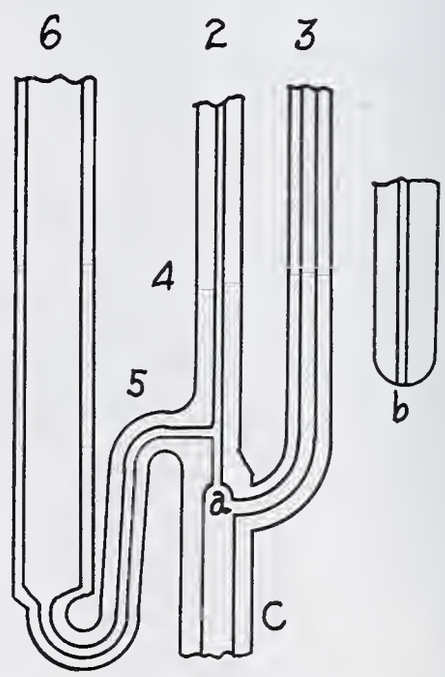

FIGURE 9

In the literature (*1*) the opinion has been widely expressed that a greater residue of highly viscous than of less viscous liquids remains in the viscometer vessel and that this affects the accuracy of the determination. This view is not supported by the facts. From the author's calculations it can be deduced that the volume remaining, V_2, is equally large with liquids of varying viscosity if the outflow period is proportional to the kinematic viscosity—that is, when $\frac{V}{t}$ is constant. This occurs in all instruments which operate without imposed pressure or at constant pressure. Omitting the theoretical derivation, we shall cite a practical experiment. Use was made in the experiments of an apparatus like that in Figure 6, except that it had a very short capillary and the liquid was allowed to flow out under its own pressure. Two very different oils were examined: a very light gas oil and a lubricating oil of fifteen times greater viscosity. At the instant when the surface of the liquid reached the mark m_2 the apparatus was

laid horizontal so that nothing more could flow out. Weighing showed that like amounts of both oils had remained behind.

In working with changing pressure—which is the rule with these instruments and is absolutely unavoidable for determining the structural elasticity—more liquid remains in the viscometer the more the outflow period, t, is diminished by increasing the imposed pressure, p. The quantity remaining in the viscometer, V_2, must therefore be eliminated by calculation. V_2 increases much more slowly than pressure p, but it is difficult to calculate its numerical value because the constant of the apparatus is based upon indeterminate quantities. The correction can be more easily determined experimentally by calibrating the capillaries at various pressures. The function of p thus determined then applies in the apparatus tested for liquids of the most different viscosities because the thickness of the adhering layer is always the same.

Pressure Regulation

For the instruments shown in Figures 5 and 6 any generator of imposed pressure may be used, among others that cited by the author (*1*, *7*), which is also provided with the suspended level (Figure 7).

The water admitted at d is so regulated that it flows out of the upper level vessel, A, through the small overflow, b, in a moderately strong stream. Cocks l and k are kept closed. By raising or lowering A the desired pressure is produced in C and can be read off from the water manometer, D.

At the lower end of tube e—from which the water flows from the upper level vessel into the lower one—a suspended level is formed (shown in insert). Otherwise surface tension effects at this point produce fluctuations in the column height. The overflow, b, sometimes fails to function uniformly because the water wets the overflow edge poorly. This trouble is, however, eliminated by suspending a wire, bent to U-shape and wound with a thick woolen thread, in the overflow. By capillary action this usually keeps the upper level constant.

Interfacial Tension by the Capillary Rise

The usual instruments for the determination of the capillary constant by the height of ascent method resemble the Ostwald viscometer. The capillary rise is determined by measuring the height of the meniscus in the capillary above the surface in the vessel. Here are obviously encountered the same difficulties as in the determination of the viscosity. Michaelis (*4*) recommended, instead of determining the difference in height between the capillary meniscus and the level surface, immersing two capillaries of different diameter in the liquid to be examined and reading off the difference in height, which is proportional to the surface tension. The difficulties can, however, be more easily obviated by the suspended level. A suitable instrument (Figure 8) differs from the viscometer (Figure 4) in that the large bulb, A, above the capillary is eliminated and the narrower capillary carries a millimeter scale beginning at zero.

The instrument is filled to a point between the two marks, x and y, on the lower vessel, tube 3 is closed by a finger, and at 2 the liquid is sucked up into the capillary. The finger is then removed from tube 3 with simultaneous release of suction at 2, allowing the meniscus in the capillary to drop. The position of the meniscus is then read off on the scale, and from it the capillarity constant α is calculated by the formula:

$$\alpha = \frac{1}{2} hr\gamma$$

Here h represents the capillary rise in cm.; r, the radius of the capillary in cm. (engraved on vessel B); and γ, the specific gravity at the experimental temperature.

In executing the measurement it is better to proceed as follows:

Tube 3 is closed with the finger and the liquid is forced by pressure applied through tube 1 into the capillary until a small drop appears at its top. This drop is carefully removed with a bit of filter paper. Tube 3 is then opened, the liquid breaks loose at the shoulder forming the suspended level, and the column adjusts itself. Depending upon the viscosity of the liquid used, this may require a prolonged period, but equilibrium is easily determined with a microscope or a reading lens.

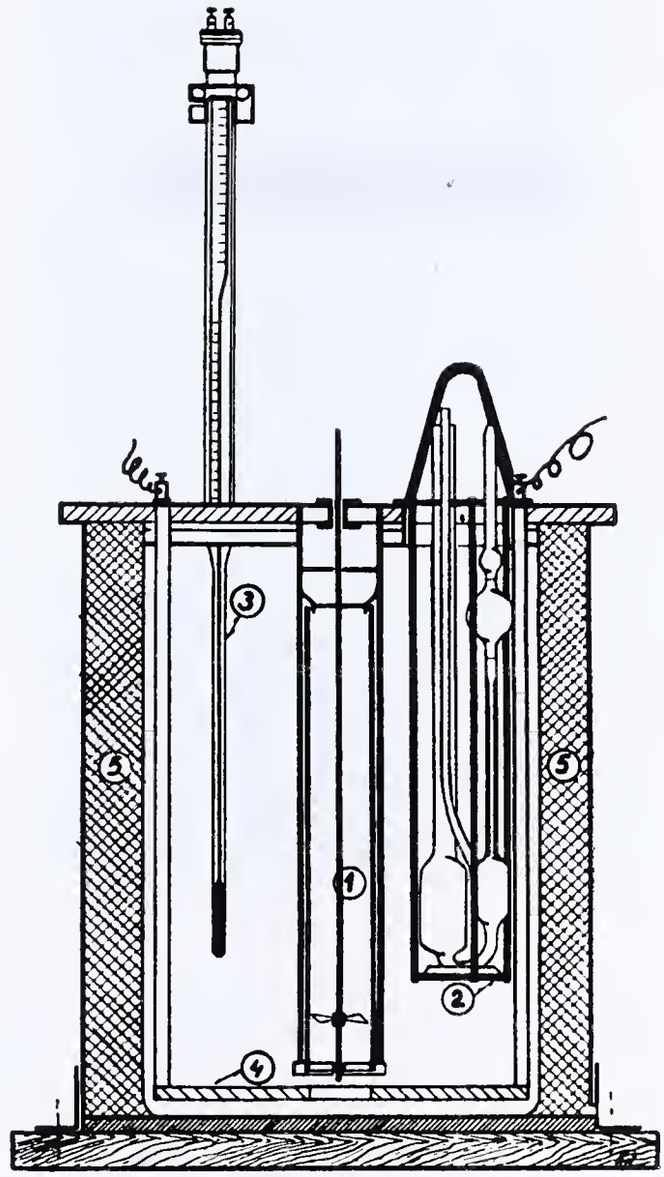

FIGURE 10

With the viscometers of Figure 4, α can be determined before or after the determination of the viscosity, but the capillaries are usually too wide to yield satisfactory results.

Dynamic Surface Tension

In the foregoing, liquids are considered as though their molecules were uniformly distributed throughout the entire mass. In the present discussion, however, hydrodynamics gives way to interfacial effects which occur through orientation and are brought about by molecular fields of force. This formation of layers influences time of drainage, and also changes the surface tension. Lenard (*2*, *3*) has treated these phenomena thoroughly from the theoretical standpoint.

The author's dynamic method presents a new means for this determination. The doming of the surface, and hence its pressure effect, can be reinforced by giving the discharge surface suitable form and size. The speed of the formation of the surface can also be varied by changing the size of the surface and the flow velocity. The tension can be measured in two ways: (1) dynamically, because the counterpressure, and with it the outflow period, must change according to

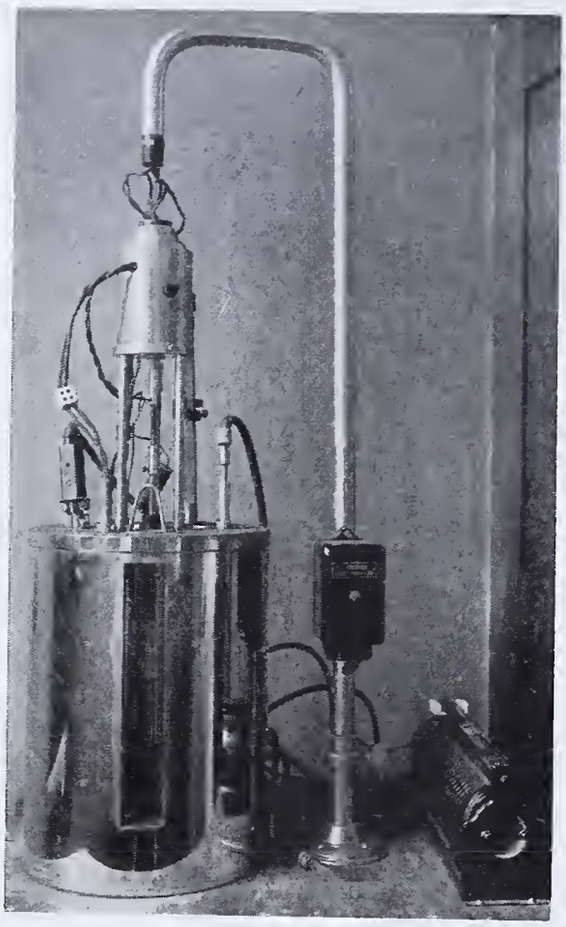

FIGURE 11

the magnitude of the surface tension; and (2) statically, because if a capillary, 5 (Figure 9), which widens into tube 6, is also connected with capillary 4 close to its discharge orifice, *a*, every change of the surface tension at the end, *a*, must change the static pressure in tube 6.

It is therefore possible simultaneously to measure statically and dynamically. The concave discharge face (*a*, Figure 9) would produce traction, while a convex one (*b*, Figure 9) would produce pressure. The respective forms of such instruments must depend upon the material to be tested and the purpose of the test. With suitable curvatures the effects can also be treated mathematically. Only when the flowing film becomes so thin that the effect of the molecular fields of force at the interfacial surface "liquid-solid" predominates does the problem become very complicated.

The instruments can be readily calibrated for a surface equal to zero. The concave or convex discharge face must either be replaced by another which is flat and therefore possesses no pressure action, or the curved discharge face can be robbed of its pressure action by immersion in liquids. If desired, tube 3 can be omitted, wide tube *C* being ground obliquely at its lower end. In this case the suspended level is produced by air entering *C* below as the end of the tube is withdrawn from the liquid in a vessel placed below.

The new measuring method could perhaps be utilized for the study of anisotropic surface tension in the Ostwald sense (*5*). With rodlet dispersoids or mesomorphic forms, rodlet-shaped molecules, after flowing through the capillary, could spread out in the suspended layer parallel to its surface, and thus show one type of surface tension, while other methods yield other types.

With mineral oils the surface tension may be of special interest because of its relationship to the internal pressure, compressibility, absorption velocity, dielectric constant, and related factors, and might open up new insights into semi-dry friction (also a problem of the flowing film). The author will shortly communicate more on this question which he broached (*8*) previously.

Thermostats

In conclusion, mention is made of the thermostats for practical use with all the instruments mentioned.

The first thermostat, shown in Figures 10 and 11, is intended for measurements at any temperature desired. It consists of an insulated water bath provided with electric heating, and by means of a contact thermometer can be adjusted to any temperature. A motor provides for vigorous stirring of the liquid. The suspended instruments, for which three openings are provided, can be observed through windows in the jacket.

FIGURE 12

If the measurement need not be made at predetermined temperatures—such, for example, as in the determination of the viscosity with the aid of viscosity-temperature tables—use is advantageously made of the ebullition thermostat shown in Figure 12 which operates with certainty and simplicity. Here the viscometer is suspended in the vapor space, while the thermostat liquid is heated to vigorous boiling. In the critical interval—that is, along the capillaries—the use of constant-boiling liquids yields a temperature accuracy of at least ±0.1° C. To avoid unnecessary condensation on the walls, the glass vessel is surrounded by insulation, in which windows are cut to permit the making of observations.

Literature Cited

(1) Engler-Höfer, "Das Erdöl," 2nd ed., Vol. 4, pp. 30 et seq., Leipzig, Verlag S. Hirzel, 1930.
(2) Lenard, P., "Probleme komplexer Moleküle," Munich, G. Franz, 1915.
(3) Lenard et al., *Ann. Physik*, **72**, 381 (1924).
(4) Michaelis, "Praktikum der physikalischen Chemie," p. 61, Berlin, Julius Springer, 1921.
(5) Ostwald, Wo., "Die Welt der vernachlassigten Dimensionen," 9–10 ed., pp. 164 and 168, Dresden and Leipzig, Theodor Steinkopff, 1927.
(6) Ubbelohde, "Zur Viskosimetrie," 2nd ed., Berlin, Verlag Mineralölforschung, 1936.
(7) Ubbelohde, "Handbuch der Oele und Fette," 1st ed., Vol. 1, p. 340, Leipzig, Verlag S. Hirzel, 1908.
(8) Ubbelohde, *Chem.-Ztg.*, **31**, 38 (1907).
(9) Ubbelohde, U. S. Patent 2,048,305 (July 21, 1936).

RECEIVED December 19, 1936. This paper is an abstract prepared from a more extensive dissertation on this subject appearing in *Oel und Kohle*, containing a complete theoretical and experimental analysis of the subjects here treated. Dr. Ubbelohde is represented in the United States by the Fish-Schurman Corp., 250 East 43rd St., New York, N. Y.

Determination of Higher Alcohols in Distilled Liquors

W. B. D. PENNIMAN, DUDLEY C. SMITH, AND E. I. LAWSHE, 341 St. Paul Place, Baltimore, Md.

Attention is directed to defects in the various methods of determining fusel oil in distilled liquors. The Allen-Marquardt procedure, which is official in this country, reports only 60 to 70 per cent of the correct amount. Colorimetric methods are shown capable of giving accurate results when certain precautions are observed. Detailed directions are given for preparing the sample and carrying out the color reaction. In the opinion of the authors, the colorimetric method is unrivaled for speed, accuracy, and sensitivity.

A DISTILLED liquor may be regarded as an ethanol-water solution containing small quantities of certain secondary constituents (*2*) which usually amount to less than 1 per cent of the whole.

The secondary constituents, which impart to the beverage its characteristic flavor and bouquet, may be divided into three groups: (a) substances derived from the original grain or other starting material by the processes of fermentation, distillation, etc.; (b) reaction products formed during aging, particularly as a result of esterification and oxidation; (c) flavor-producing substances added or extracted from wood.

The first group—i. e., the flavor-producing materials which are inherent in the freshly distilled liquor—consist chiefly of the higher alcohols and their esters. The higher alcohols are grouped together under the collective designation fusel oil, which in analytical practice includes not only the free alcohols but also those portions which are esterified, the esters being decomposed by saponification before the higher alcohols are determined.

Fusel oil content furnishes one of the principal criteria for judging the type, quality, and purity of a distilled liquor, and for this reason its determination is of importance in the chemical examination of such a beverage. The various methods of fusel oil determination depend either upon an approximate separation of the higher alcohols from the ethanol-water solution by means of extraction, or on colorimetric reactions exhibited by the higher alcohols but not by ethyl alcohol. The available methods are defective in various ways, results varying not only with the method used but also to some extent with the analyst applying the method.

It is the purpose of the present paper to point out defects in the existing methods and to present what is believed to be an approach to a more satisfactory procedure.

Extraction Methods

In the Rose-Herzfeld procedure (*13, 18*) the sample is shaken with a measured volume of chloroform and the higher alcohols are estimated from the increase in volume of the extractant. This method usually gives results of the correct order or magnitude. Difficulties cited by Schidrowitz (*21*) in applying the method to whisky are easily avoided in practice. The Rose-Herzfeld method is, however, subject to the limitation that the different higher alcohols are distributed differently between the two phases and the result is therefore dependent upon fusel oil composition.

The same objection applies with greater force to the Beckmann-nitrite (*4*) and Allen-Marquardt (*1, 2, 3, 5, 14, 15*) procedures, in which a partial separation of the higher alcohols is effected by successive extractions with carbon tetrachloride, the extract is purified by washing, and the higher alcohols are then estimated chemically. The Beckmann method has been tested experimentally by a number of workers (*5, 17, 22*) but has never been widely used. The Allen-Marquardt method, on the other hand, is the mode of determination most widely employed both here and in Great Britain, and when carried out in accordance with the directions of the Association of Official Agricultural Chemists (*3*) constitutes the official method in this country. Findings obtained by this method, particularly in the hands of government chemists, are accorded a respect which is sometimes equivalent to weight of law.

The method has long been known to be subject to errors, but the magnitude of these errors has not been generally realized. For example, Dudley (*7*) after making a comparative study of the Allen-Marquardt and Rose-Herzfeld procedures, and finding results given by the latter method to be two to two and one half times greater than those obtained by the Allen-Marquardt method, concluded that the Rose method was greatly in error. In the light of results which will be cited below it is evident that the reverse conclusion should have been drawn.

In the present work the accuracy of the A. O. A. C. method has been tested in various ways, the results being presented in Tables I and II. In all cases the official procedure has been followed strictly, and the results calculated to amyl alcohol.

TABLE I. ERRORS IN A. O. A. C. METHOD OF FUSEL OIL DETERMINATION

(Ethyl alcohol; 50 per cent by volume)

No.	Higher Alcohols	Total Concentration of Higher Alcohols Present	Total Concentration of Higher Alcohols Found	Yield
		Grams/100,000 cc.		%
1	Mixture of isoamyl and isobutyl in ratio of 4 to 1	41	32	78
2	Mixture of isoamyl and isobutyl in ratio of 4 to 1	81	46	57
3	Mixture of isoamyl and isobutyl in ratio of 4 to 1	163	89	55
4	Mixture of isoamyl and isobutyl in ratio of 4 to 1	244	127	52
5	Mixture of isoamyl and isobutyl in ratio of 4 to 1	325	142	45
6	Mixture of isoamyl and isobutyl in ratio of 4 to 1	410	172	42
7	Isopropyl	40	11	28
8	*n*-Propyl	39	11	28
9	*n*-Butyl	40	21	52
10	Rye fusel oil	100	69	69
11	Rye fusel oil	300	194	65

The figures of Table I indicate that the errors in the A. O. A. C. method vary both with the composition and concentration of fusel oil, and hence no single correction factor can be applied to all cases. The percentage accuracy with rye fusel oil is somewhat larger than with the synthetic mixture of isoamyl and isobutyl alcohols. Apparently the method may be expected to report on the average about 60 per cent of the total fusel oil actually present, though under certain conditions the accuracy may be as low as 40 per cent.

The data of Table II were obtained by adding weighed quantities of the higher alcohols to carbon tetrachloride and oxidizing with the bichromate–sulfuric acid mixture according to the A. O. A. C. Percentage yields here are larger than for the whole process. This indicates that the errors in the method occur partly in the oxidation stage and partly in the extraction stages. Errors in the extraction stage of the Allen-Marquardt method have been demonstrated by Bedford and Jenks (*5*) and by Mitchell and Smith (*16*). The last-named investigators also proposed the use of alkaline permanganate instead of the bichromate mixture for oxidizing the higher alcohols. From time to time various other changes in procedure have been suggested, as, for example, oxidation in closed tubes or at carefully controlled temperatures (*14*). While it is possible that some of these modifications might result in a more nearly quantitative conversion of the higher alcohols to acids, there would remain the rather large and variable errors which occur in the extractive stages of the method.

Table II. Errors in Oxidation of Higher Alcohols to Acids by A. O. A. C. Method

Concentration of Higher Alcohols		
Present	Found	Yield
Grams/100,000 cc.		%
163	144	
163	139	87
325	260	
325	245	79

The A. O. A. C. method is materially affected by variations in technic and by uncontrolled factors, such as the temperature at which the extraction steps are carried out. This probably accounts for the well-known fact that when identical samples are analyzed by different operators, both observing the letter of the method, divergent results are sometimes reported. Table III shows a comparison of results obtained by this laboratory and another on a series of six samples of distilled liquors. It will be noted that in two cases the corresponding figures differ by as much as 20 per cent. Much larger discrepancies were found in a series of coöperative tests carried out under the auspices of the A. O. A. C. (*23*), although in this case amyl was the only higher alcohol used. Figures reported by eleven different laboratories ranged from 42 to 145 per cent of the total amyl alcohol actually present. The method employed differs slightly from the present form.

Table III. Comparison of A. O. A. C. Results from Two Laboratories

No.	Fusel Oil by A. O. A. C. Method Laboratory A	Laboratory B
1	116	103
2	102	99
3	148	117
4	134	105
5	96	81
6	53	61

Despite the above-mentioned defects the Allen-Marquardt method is capable of giving fairly reproducible results, when carried out by the same operator, using the same equipment, duplicate determinations usually agreeing to within 5 grams per 100,000 cc. The figures so obtained may be regarded as a rough comparative index of fusel oil content, and are therefore of some practical utility in the control of plant operations.

Colorimetric Methods

Colorimetric methods of fusel oil determination utilize the so-called Komarowsky reaction (*11*) by which colored products are formed through the interaction of higher alcohols with cyclic aldehydes in the presence of concentrated sulfuric acid. In the earliest form of the method (*20*) the sample was treated with sulfuric acid alone. The resulting color was due largely to the small and variable quantities of furfural occurring naturally in the liquor and hence failed to furnish a reliable measure of fusel oil content.

The Komarowsky reaction has been studied extensively by Swiss and German chemists (*6, 8, 12, 19*). Aldehydes which have been employed as reagents include the following: salicylaldehyde, benzaldehyde, *p*-dimethylaminobenzaldehyde, furfural, veratric aldehyde, and vanillin. In one study (*10*) the last-named reagent was given a special use as a precipitant.

The work of von Fellenberg indicates that the higher alcohols are converted by the action of sulfuric acid into unsaturated hydrocarbons, which then combine with the cyclic aldehyde to form colored products (*9*). (This investigator after an extensive study finally abandoned the colorimetric method of fusel oil determination, for reasons which the writers have not found to be conclusive. In fact, difficulties cited by this worker have been of value to the present authors in pointing the way to optimum reaction conditions.) The color reaction is therefore not peculiar to the higher alcohols but is exhibited in general by (a) unsaturated hydrocarbons and their derivatives; (b) substances which on treatment with concentrated sulfuric acid are converted into unsaturated hydrocarbons. This group includes aldehydes and ketones but not acids. Other interfering substances which may occur in liquors include acetals and terpenes (*2, 21*). All interfering substances must, of course, be eliminated or reduced to negligible proportions before the sample is subjected to the colorimetric methods.

In the present work the sample has been prepared by a treatment which decomposes acetals and terpenes and fixes all but a negligible portion of aldehydes. This treatment embodies features used by various other workers.

Various reagents and treatments have been employed for the removal of aldehydes. These include *m*-phenylene diamine hydrochloride (*1*), which Schidrowitz and Kaye (*22*) found to be less effective than phenylhydrazine *p*-sulfonate; *p*-nitrophenylhydrazine; and saponification with silver oxide catalyst. In the present work, the last-named treatment has been found to be the most effective.

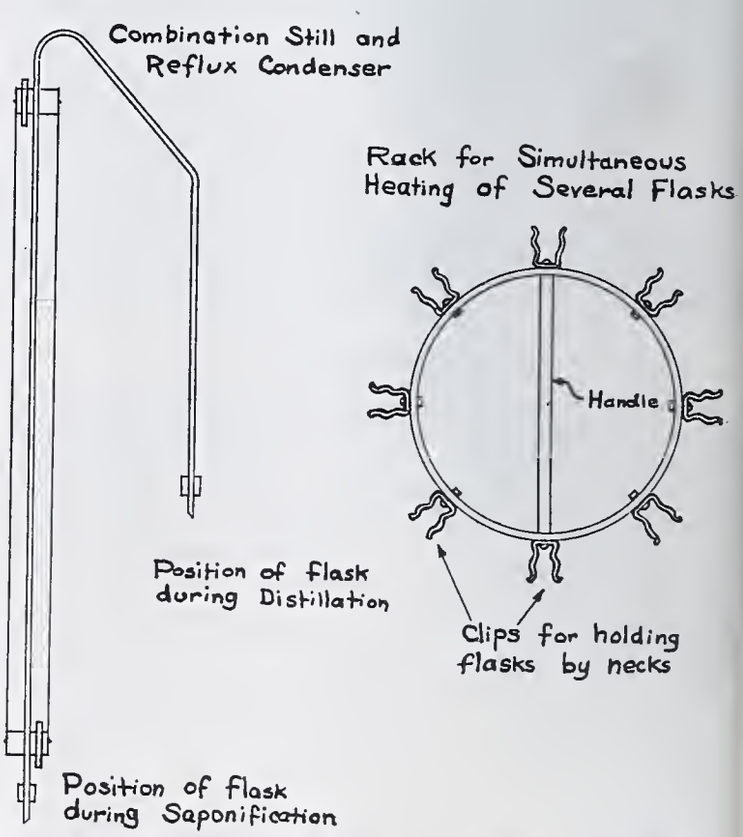

Figure 1. Apparatus for Use in Colorimetric Determination of Fusel Oil

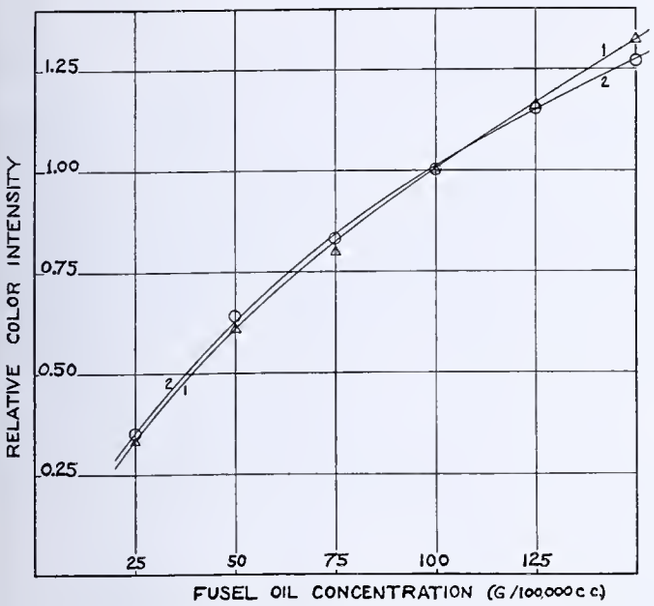

FIGURE 2. RELATION BETWEEN FUSEL OIL CONCENTRATION AND COLOR INTENSITY

PREPARATION OF SAMPLE. Place 25 cc. of sample in a 500-cc. round-bottomed flask. Add 0.5 gram of silver sulfate and 1 cc. of (1+1) sulfuric acid, and make the total volume up to 110 cc. Reflux gently for 15 minutes. Make the solution alkaline with 5 cc. of (1+1) sodium hydroxide solution, and reflux for 30 minutes. Bumping can be prevented by the addition of small quantities of granulated zinc. If foaming occurs, this can be reduced by adding 15 grams of sodium chloride. The addition of salt results in a partial conversion of silver oxide to silver chloride, but this fact does not appear to affect the efficiency of the silver as a dealdehyding agent.

After the saponification the sample is distilled, 75 cc. of distillate being collected. This distillate contains all of the higher alcohols originally present in the sample. The concentration has been reduced to one-third that of the sample. This reduction in concentration is made necessary by the extreme sensitivity of the color reagents.

GENERAL DIRECTION FOR THE COLOR REACTION. In carrying out the color reaction it is necessary to select proportions and other conditions which will result in a clear solution whose color intensity is suitable for examination in the colorimeter. The following factors must be controlled: (1) amount of sample, (2) amount of reagent, (3) amount of concentrated sulfuric acid, (4) concentration of ethyl alcohol, (5) temperature and time of heating to develop the color, (6) amount of diluent added after terminating the reaction, and (7) concentration of sulfuric acid in the diluent solution.

The reaction is not allowed to go to completion but is arbitrarily stopped after a definite length of time by chilling the reaction mixture and diluting. It is therefore necessary to run standards and sample side by side under exactly similar conditions.

Different color reagents demand slightly different conditions for optimum results. The reagents and procedures which the authors have found most useful are given below.

PROCEDURE WITH *p*-DIMETHYLAMINOBENZALDEHYDE OR SALICYLALDEHYDE. Place 2.00 cc. of the distillate, obtained as directed above, in a 125-cc. Florence flask. Add 20.0 cc. of concentrated sulfuric acid, swirling the flask in a bath of cold water during the addition. Then add 2.00 cc. of a solution of the reagent in 95 per cent ethyl alcohol (10 mg. per cc.), again swirling the flask in cold bath.

Prepare a similar flask containing 2.00 cc. of a standard fusel oil solution, acid, and reagent.

Place the flasks simultaneously in a bath of vigorously boiling water. After 20 minutes transfer the flasks to the cold bath. When cool add 25 cc. of (1+1) sulfuric acid and mix thoroughly by swirling. The solutions are then ready for comparison in the colorimeter.

PROCEDURE WITH VANILLIN. Proceed as directed above for the other two reagents, except for the following differences: (a) use only 10 cc. of concentrated sulfuric acid in making up the reaction mixture; (b) the vanillin solution contains 17.5 mg. of reagent per cc. of 95 per cent ethyl alcohol.

REAGENTS AND APPARATUS. The aldehydes and other reagents used in the colorimetric work were of C. P. grade not further purified.

C. P. alcohol containing only a trace of fusel oil should be used in making up standard solutions, etc.

No specialized apparatus is required either for the preparation of sample or for the color reaction. Figure 1 shows simplified equipment which has been found convenient in the present work. The colorimeter used was of the Duboscq type.

RELATION BETWEEN FUSEL OIL CONCENTRATION AND COLOR INTENSITY. When the above procedure is applied to a series of solutions of varying fusel oil content, the resulting color intensities are nearly but not quite proportional to fusel oil concentration. Calibration curves for the three reagents are shown in Figure 2. The color intensities are of course only relative, that for 100 grams per 100,000 cc. being taken as unity.

With increasing concentration of fusel oil there is a slight shift in color tone from red towards purple. This fact makes it desirable in practice to compare the sample with a standard of approximately equal fusel oil content.

STANDARD FUSEL OIL SOLUTIONS. The success of the colorimetric method depends upon the use of accurate and reliable color standards. The most satisfactory standard is a solution containing a weighed quantity of actual fusel oil of the same type as that contained in the sample.

The standard fusel oil used in the present work was obtained from a sweet-mash rye whisky of the Maryland type. The process of obtaining the fusel oil is itself capable of use as an analytical method with moderate-sized samples (1 liter). When applied to larger samples, fusel oil is obtainable in amounts sufficient for fractional distillation to determine the amounts of each alcohol present. Work of this nature is now in progress, and is expected to be presented in a forthcoming publication.

Where a standard fusel oil is not available, a satisfactory working standard for colorimetric work can be prepared by mixing isoamyl (b. p. 132) and isobutyl alcohols in the ratio of 4 to 1. The resulting color shades match fairly closely those given by sweet-mash rye fusel oil. When the reaction is carried out as described above, the synthetic mixture is slightly weaker than fusel oil, the ratio being 0.95 for *p*-dimethylaminobenzaldehyde or salicylaldehyde and 0.90 for vanillin. In using a synthetic standard, the colorimeter reading should in each case be multiplied by the appropriate factor.

The percentage of ethyl alcohol in the standard should be approximately the same as in the prepared sample, or 15 per cent by volume in the case of liquors originally 90- to 100-proof. A convenient fusel oil concentration for the standard has been found to be 100 grams per 100,000 cc.

COLOR REACTIONS OF INDIVIDUAL HIGHER ALCOHOLS. When tested separately, the various higher alcohols exhibit very different color intensities, isobutyl being strongest when either vanillin or *p*-dimethylaminobenzaldehyde is used as reagent. With salicylaldehyde the strongest color intensity is given by *n*-amyl alcohol. The relative color intensities are shown in Figure 3, which was obtained by carrying out the color reaction on 0.100 per cent solutions of each of the higher alcohols and comparing the resulting color intensities with that given by isoamyl.

Errors due to differences between the individual alcohols are largely eliminated by the use of real fusel oil as standard, or by the accurate calibration of the working standard against actual fusel oil. Where an accurate fusel oil standard is not available, either salicylaldehyde or *p*-dimethylaminobenzaldehyde is preferable to vanillin, since for the higher alcohols

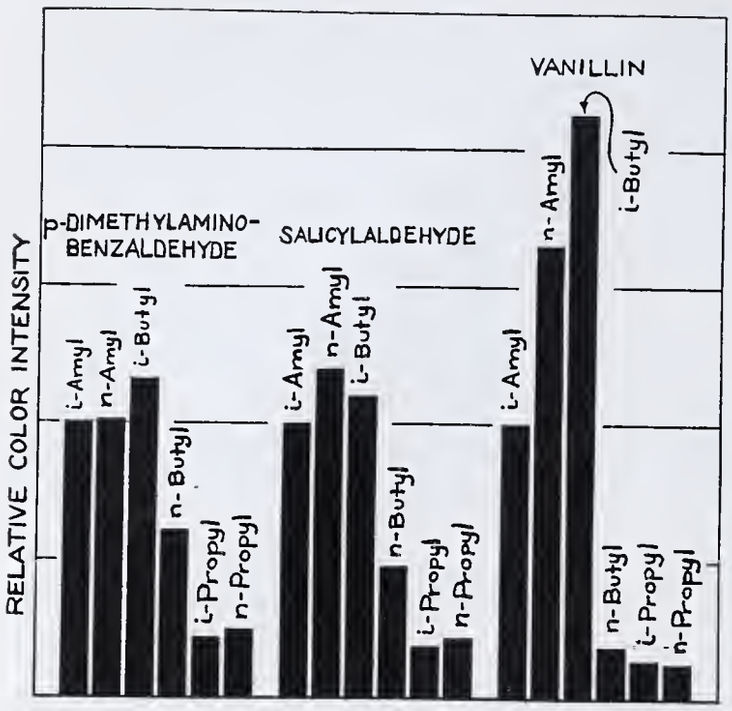

FIGURE 3. RELATIVE COLOR INTENSITIES GIVEN BY INDIVIDUAL HIGHER ALCOHOLS

which make up the greater part of fusel oil, more nearly equal color intensities are given by the first two reagents. In general the use of two or more reagents on the same sample is desirable because a comparison of the results gives information as to the type of fusel oil, and abnormal samples may be detected.

The individual higher alcohols differ also in the exact shade of color produced. Amyl alcohol gives a slightly redder shade, while butyl and propyl alcohols tend more towards purple. Variation in color shade thus furnishes an indication as to type of fusel oil.

Comparison of A. O. A. C. and Colorimetric Methods

Fusel oil has been determined in a considerable number of whiskies by both the A. O. A. C. and colorimetric methods, the results being shown in Figure 4. The open circles represent actual whisky samples while the black circles refer to synthetic solutions containing weighed quantities of isoamyl and isobutyl alcohols in the ratio of 4 to 1. In the case of the latter points the ordinates represent actual content of higher alcohols. These points thus afford a rough calibration of the A. O. A. C. method. It will be noted that they fall well within the area over which the actual whisky points are spread. This is an indication that the colorimetric results are at least approximately correct.

A further comparison of the two methods is shown in Table IV where A. O. A. C. results on three rye whiskies are compared with the results given by three colorimetric reagents.

TABLE IV. FUSEL OIL CONTENT OF THREE RYE WHISKIES (WHITE) BY A. O. A. C. AND COLORIMETRIC METHODS

(Grams per 100,000 cc. of 100-proof spirits)

Sample No.	A. O. A. C. Method	Colorimetric Method: Vanillin	Colorimetric Method: *p*-Dimethylaminobenzaldehyde	Colorimetric Method: Salicylaldehyde
175985	133	192	198	201
175996	123	197	194	206
176144	168	267	255	276

The A. O. A. C. figures are 62 to 67 per cent of the colorimetric. This ratio agrees well with the percentage yields obtained when the A. O. A. C. method is applied to solutions containing weighed quantities of rye fusel oil (cf. Table I), and is further evidence of the approximate accuracy of the color method when carried out under the conditions stated above.

Since the A. O. A. C. method reports only about 60 per cent of the actual fusel oil in the sample, it follows that established ideas regarding fusel oil concentration in whiskies will have to be revised upwards. Where it has been customary to speak of fusel oil content of 100 to 200 it will be necessary in the future to think in terms of 200 to 300 grams per 100,000 cc. For the present, however, so long as the Allen-Marquardt method remains official, its use by commercial analysts is practically mandatory and so the present scale of values will have to be continued.

It is apparent that a direct test of the accuracy of the color method is impracticable. If a synthetic sample is subjected to the colorimetric method, the result is found to be correct within the limits of the color comparison itself, since the sample is identical in composition with the standard used in the color reaction. The only possible discrepancy would be due to loss of fusel oil during the preparatory treatment of sample (saponification, distillation, etc.). By trial it has been found that no such loss occurs. Maximum errors due to inaccuracies in the volume measurements and the color comparison should not total over 2.5 per cent of the final result.

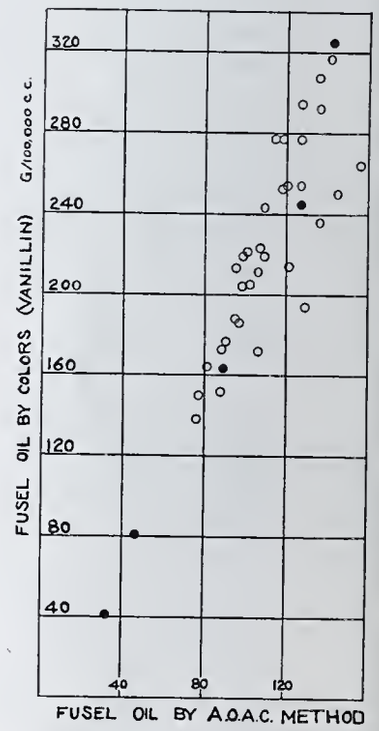

FIGURE 4. COMPARISON OF COLORIMETRIC AND A. O. A. C. METHODS OF FUSEL OIL DETERMINATION

The colorimetric method offers the following advantages:

The time required for the determination is less than by any other method.

The sensitivity of the method is far greater than that of any other. By virtue of its sensitivity the colorimetric method is applicable to low-proof beverages, such as wines and beers, in which fusel oil has not hitherto been determined.

Abnormal or unusual samples are readily detected by off-shades of color and by the use of two or more color reagents on the same sample.

The method yields results of the correct order of magnitude.

The colorimetric method possesses the following disadvantages:

The sample must be given a rigorous pretreatment to eliminate interfering substances.

For accurate work it is desirable to use as the colorimetric standard a sample of actual fusel oil of the same type as that contained in the sample.

The individual alcohols exhibit different color intensities, and the result is therefore dependent on composition of fusel oil. This source of error is very largely, though not entirely, eliminated by the use of fusel oil standards.

Literature Cited

(1) Allen, A. H., "Commercial Organic Analysis," Vol. 1, p. 158, 1903; Bassett, H. P., J. IND. ENG. CHEM., 2, 389 (1910).
(2) Allen, A. H., and Chattaway, W., *Analyst*, 9, 102 (1891).

(3) Assoc. Official Agr. Chem., Official and Tentative Methods of Analysis, 3rd ed., 145 (1930).
(4) Beckmann, *Z. Untersuch. Nahr. u. Genussm.*, **2**, 709 (1899).
(5) Bedford, C. H., and Jenks, R. L., *J. Soc. Chem. Ind.*, **26**, 123 (1907).
(6) Bleyer, B., Diemair, W., and Frank, E., *Z. Untersuch. Lebensm.*, **66**, 389 (1933).
(7) Dudley, W. L., *J. Am. Chem. Soc.*, 30, 1271 (1908).
(8) Fellenberg, Th. von, *Chem.-Ztg.*, 34, 791 (1910).
(9) Fellenberg, Th. von, *Mitt. Lebensm. Hyg.*, **1**, 311 (1910).
(10) Fellenberg, Th. von, and Schuppli, O., *Ibid.*, 9, 141 (1918).
(11) Komarowsky, *Chem.-Ztg.*, 27, 807, 1086 (1903).
(12) Korenmann, J., *Z. anal. Chem.*, 88, 249 (1932).
(13) Lunge, G., "Technical Methods of Chemical Analysis," pp. 726 ff., New York, D. Van Nostrand Co., 1914.
(14) Mann, E. A., and Stacey, C. E., *J. Soc. Chem. Ind.*, **15**, 1125 (1906).
(15) Marquardt, L., *Ber.*, **15**, 1370 (1882).
(16) Mitchell, A. S., and Smith, C. R., U. S. Dept. Agr., *Bur. Chem. Bull.* **122**, 25 (1909).
(17) Muller, C., "Determination of Fusel Oil in Alcoholic Liquors," dissertation, Leipzig, 1911.
(18) Rose, Stutzer, and Windisch, *Arb. kaiserl. Gesundh.*, **5**, 391 (1889).
(19) Ruppin, E., *Z. Untersuch. Lebensm.*, **66**, 389 (1933).
(20) Savelle, Mohler, and Saglier, Fremy's Encyclopedie Chimique, p. 285 (1890-91).
(21) Schidrowitz, P., *J. Am. Chem. Soc.*, **29**, 561 (1907).
(22) Schidrowitz, P., and Kaye, F., *Analyst*, 30, 190 (1905).
(23) Tolman, L. M., U. S. Dept. Agr., *Bur. Chem. Bull.* **122**, 25 (1909).

RECEIVED October 5, 1936. Presented before the Division of Agricultural and Food Chemistry at the 92nd Meeting of the American Chemical Society, Pittsburgh, Pa., September 7 to 11, 1936. This paper is part of an investigation carried on by the Research Department of the Consolidated Gas, Electric Light and Power Company of Baltimore and Penniman & Browne.

Support for Perforated Platinum Crucibles

WILLIAM M. THORNTON, JR., Loyola College, AND JOSEPH G. SMITH, Johns Hopkins University, Baltimore, Md.

THE need has long been felt for a holder that would support both the cap and the receptacle proper of the Gooch filtering crucible (*1*) during a high-temperature ignition. If a triangle be selected to accommodate the cap, the small system is somewhat lacking in stability; whereas, if a larger triangle be chosen, the hot cap (especially during the early stages of the heating) may fall to the work table. Using two rings, placed one above the other, becomes impracticable for small crucibles, since with ordinary rings the upper and lower triangles are located too far apart.

The contrivance here depicted, after a design by one of the authors (J. G. S.), has been found to serve admirably and permits the treatment of perforated crucibles differing considerably in size.

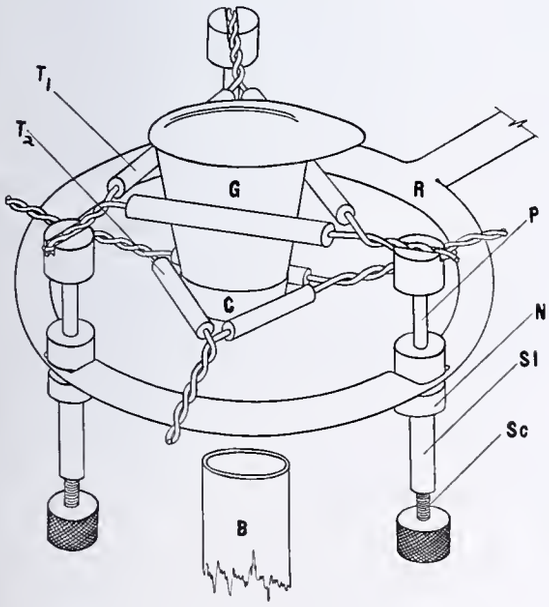

FIGURE 1. DIAGRAM OF APPARATUS

P, total length, 37 mm.; diameter, 3.5 mm.; height of head, 7 mm.; diameter of head, 9 mm.; diameter of groove, 3.5 mm.; depth of groove, 2.5 mm.
Sl, total length, 35 mm.; external diameter, 5 mm.; internal diameter (exclusive of threaded portion), 3.75 mm.; height of head, 4 mm.; diameter of head, 9 mm.; height of supporting nut *N*, 5 mm.; diameter of nut, 9 mm.
Sc, total length, 40 mm.; diameter (exclusive of grooved head), 3 mm.; height of knurled nut, 7 mm.; external diameter of nut, 9 mm.; internal diameter of nut, 7 mm.; depth of cylindrical cup in nut, 3 mm.

Construction

An 8.3-cm. (3.25-inch) cast-iron ring, *R*, is notched at three places equidistant from one another, preferably at the points where the little projections extend inward, so as to produce six level spaces about 5 by 10 mm. each—three above and three below. At the approximate center of each of these rudely rectangular areas a hole is drilled and subsequently threaded, and into this opening sleeve *Sl*, the upper and slightly larger third of which (exclusive of the cylindrical head) is reciprocally threaded, is fitted by turning downward until the head rests snugly upon the flattened part of the ring, where it is firmly held by tightening nut *N*.

The slender rod, *P*, with grooved head rests loosely in the sleeve and naturally falls to the lowest level permitted by screw *Sc*. This long thin screw is without taper, terminates in a rounded and grooved head, is threaded throughout its length, and a knurled nut is attached to it by virtue of its own threads. Sleeve *Sl*, starting at its lower end, is threaded for a short distance, where its internal diameter is a little less than that of the remaining portion; these threads control the up-and-down movements of screw *Sc*.

The rod, sleeve, and screw were machined from mild steel.

Manipulation

The smaller triangle, T_2, lies on ring *R* and the twisted ends of the larger triangle, T_1, rest in the grooves of the three rods, *P*. By turning the screws, *Sc*, triangle T_1 can be brought into a horizontal plane parallel to the one defined by ring *R*, and can be raised or lowered to any desired level. It is thus easy to set triangles T_2 and T_1 just tangent at three points to cap *C* and crucible *G*, respectively, rendering the entire apparatus stable.

Triangles made of nichrome wire covered with fused-silica ("vitreosil") tubes, the one measuring 3.8 cm. (1.5 inches) and the other 5.1 cm. (2 inches) on a side, are well suited to a 20-ml. perforated platinum crucible of the usual form, and when properly adjusted stand about 15 mm. apart.

The steel parts of the outfit have not as yet been observed to burn, even when the full power of the Tirrill burner, *B*, was being utilized. Rusting may be prevented by coating them with light machine oil when not in use.

Literature Cited

(1) Gooch, F. A., *Proc. Am. Acad. Arts Sci.*, **13**, 342 (1878); *Am. Chem. J.*, **2**, 250 (1880).

RECEIVED November 10, 1936.

Precise Determination of Carbon Dioxide in Air

Hand-Operated Apparatus

J. G. WAUGH,[1] New York State College of Agriculture, Cornell University, Ithaca, N. Y.

IN SOME investigations on the photosynthetic or respiratory activity of leaves, using the absorption or excretion of carbon dioxide by the leaf as the criterion of activity, it was necessary to construct a hand-operated apparatus which would determine the carbon dioxide content in 2.5 liters of air whose carbon dioxide content ranged from 65 to 125 per cent of that of ordinary air with a maximum error of 2 per cent and an average error of approximately 1 per cent of the atmospheric concentration, and allow of 2 or 3 determinations an hour. Because certain field conditions were unsuitable for the operation of the apparatus for determining the carbon dioxide, the air samples were collected in containers, transported into the laboratory, and determined at leisure. This apparatus, while not having the advantages and possibilities of an automatic apparatus such as that of Thomas (*9*), is cheaper and easier to construct. Besides being almost entirely assembled from standard laboratory equipment, it could be adapted to various problems involving the measurement of carbon dioxide, and should prove useful in the investigation of air pollution, animal respiration, and other biological problems, especially where small quantities of carbon dioxide are involved.

In the development of the apparatus, the method of Rideal and Taylor (*7*) was considered, but because of difficulty in controlling the rate of flow of alkali and the time-lag factor involved in obtaining readings it was rejected. Some experiments were made to increase the accuracy of the potentiometric method of Wilson, Orcutt, and Peterson (*11*), but errors caused by drift of the glass electrode and electrical leakage were much in excess of the accuracy demanded. The method of Heinicke and Hoffman (*2*) is readily adapted to measurements on large volumes of air, but the error inherent in titration and manipulation becomes too large when small volumes of air are used. Thomas (*9*) describes an absorber capable of removing all the carbon dioxide from a stream of normal air moving at a rate of 350 cc. per minute by means of 40 cc. of 0.0052 *N* sodium hydroxide with 0.4 per cent *n*-butyl alcohol. His absorber includes a fritted glass plate to break the air stream into fine bubbles, and a small amount of butyl alcohol in the dilute sodium hydroxide solution to depress the surface tension of the solution, allowing the bubbles to persist and thereby increasing efficiency of absorption. The maximum error of the total concentration of the carbon dioxide in the air was found to be less than 1 per cent. A hand-operated apparatus as outlined by Thomas (*9*) seemed most promising, and the apparatus described below is in large part based on it.

[1] Present address, Pecan Research Laboratory, Bureau of Plant Industry, U. S. Department of Agriculture, Austin, Texas.

Description of Apparatus

The apparatus developed for measuring the carbon dioxide content of the air consists primarily of an absorber, as shown in Figure 1, which is designed to hold dilute alkaline solutions for the absorption of carbon dioxide and to measure the electrical conductivity of the solutions.

The absorber is made entirely of Pyrex glass and consists essentially of a glass tube, *A*, 75 cm. long, having an inside diameter of 25 mm. The absorber is provided with a fritted-glass plate at *D*, sealed in at an angle of about 10 degrees to the horizontal. The plate is made of 80-mesh glass according to the method of Bruce and Bent (*1*), and is 4.5 mm. thick. Below the fritted-glass plate is a small septum, *E*, into which a tube, *F*, of 6-mm. outside diameter is sealed. A drain, *G*, made of 6-mm. glass tube and 4 cm. long, is sealed into the absorber just above the fritted plate, so that the absorber can be drained of solution, except for a small residual amount of less than 1 cc.

The electrodes, *H*, are platinized-platinum plates 1 cm. square and are welded to tungsten shanks, *B*, about 0.7 mm. in diameter and 2.5 cm. long. The electrodes are parallel, in a vertical plane, and 1 cm. apart. The welding of the platinum plates to the tungsten shanks is accomplished by welding platinum beads to the ends of the shanks in the oxy-gas flame, and electrically spot-welding the platinum plates to the beads. The shanks are sealed in the glass tube and are covered with a coating of glass as far as the plates. The other ends of the shanks extend into 1-cm. glass tubes, *CC*. In order to obtain electrical connection with the plates, tubes *CC* were filled with mercury to a depth of 3 cm. and copper wires run down the tubes into the mercury. Rubber caps were fixed on the tops of the tubes to prevent dust and moisture from accumulating in them. A light metal framework (not shown in the diagram) was constructed about the upper ends of tubes *CCFA*, and served to hold them rigidly in place, preventing possible breakage.

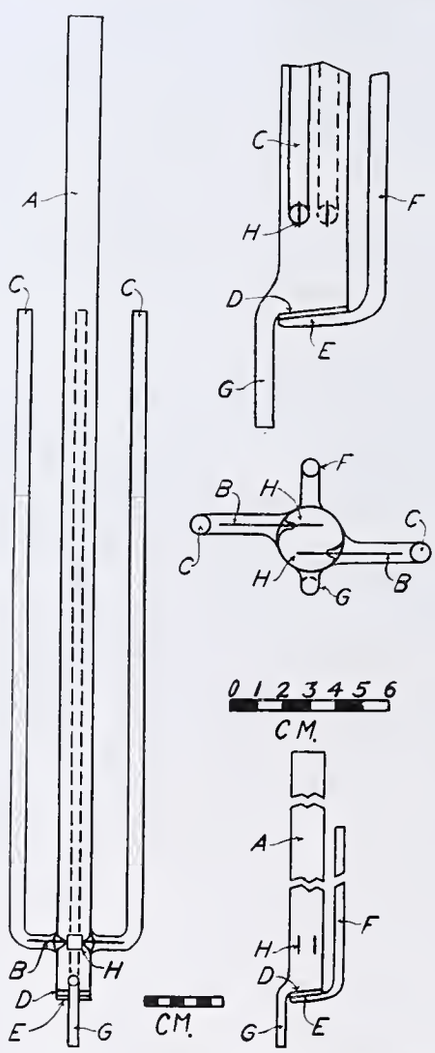

FIGURE 1. DIAGRAM OF ABSORBER

The apparatus is shown in Figure 2. The absorber is immersed to a depth of 30 cm. in a thermostatic water bath, *B*, which consists of a 19-liter glazed earthenware crock. The temperature of the bath is held to 30° ± 0.01° C. by a thermostatic relay control. As the laboratory temperature was about 26° C., no cooling device was necessary. For the sake of avoiding undue complication, the thermostatic system is not shown in Figure 2. The thermostatic bath, *B*, stands on a wooden box. A round hole 1.27 cm. in diameter is bored through the bottom of the bath, and directly beneath another hole is bored through the top of the box. The drain of the absorber, *A*, extends through a tightly fitting rubber stopper in the bottom of the bath. A short length of rubber tubing provided with a clamp is fitted on the drain at *C* so that the absorber can be drained at will, and a beaker is used to collect drained solutions.

The absorbing solution, consisting of 0.00488 *N* sodium hydroxide with 0.4 per cent *n*-butyl alcohol, is stored in a 19-liter bottle, *E*, which is provided with a soda-lime U-tube, *F*, to prevent the solution

from absorbing carbon dioxide from the air. The solution is measured into the absorber by means of a 50-cc. refill pipet, *D*, which is provided with a soda-lime U-tube, *G*, to prevent carbon dioxide absorption. A rubber stopper is tightly fitted in the top of the absorber, and the delivery tube of the pipet extends through this stopper into the absorber. A water suction pump, *M*, provides vacuum for aspirating the air through the absorber. A water trap, *L*, consisting of a 1-liter Erlenmeyer flask, prevents possible sucking back of water into the absorber if the water pressure falls. A three-way stopcock at *I* is used to regulate the suction as desired. When the suction is stopped, air passes through the soda-lime U-tube, *H*, is freed of carbon dioxide, and equalizes the pressure in the absorber with the atmospheric pressure. In this way a small continued flow of air through the absorber due to a remaining partial vacuum in the absorber, which might disturb the conductivity measurements, is prevented. The air intake of the absorber is at *Q*, which leads to a three-way stopcock, *J*. A long soda-lime tube, *N*, provides carbon dioxide–free air for the absorber when desired. A float-valve which prevents water from entering the absorber, but permits air to pass, is provided at *O*. The bend, *S*, prevents condensed water from draining into the absorber, and a short side tube, *R*, with a short length of rubber tubing and a clamp, collects the water and can be periodically drained.

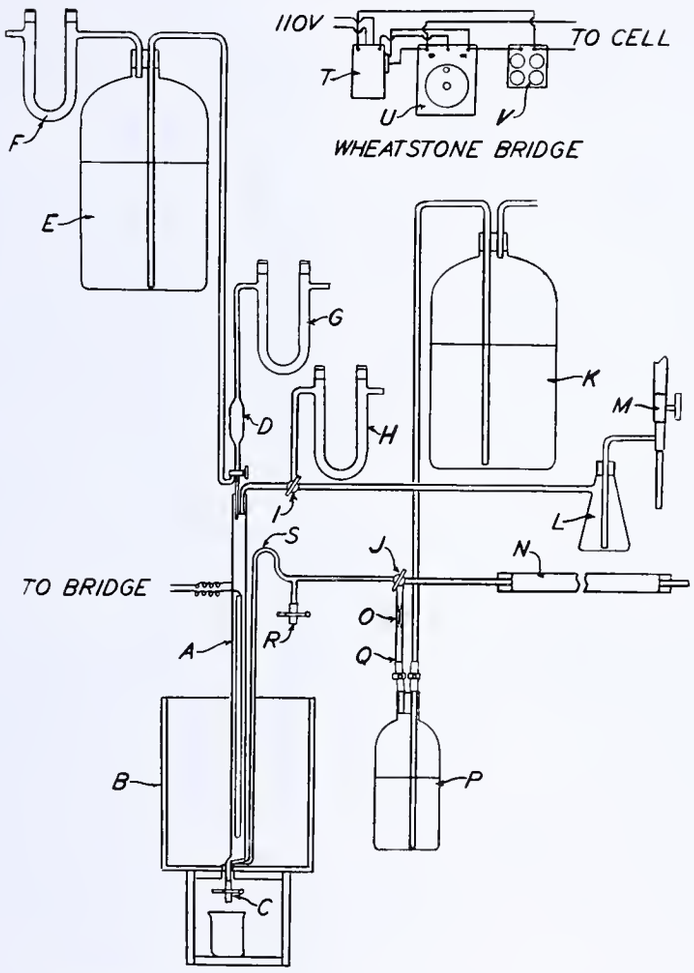

FIGURE 2. APPARATUS FOR DETERMINING CARBON DIOXIDE IN AIR

Manipulation of Apparatus and Analyses

In making a determination, the absorber is given a preliminary rinsing with the absorbing solution. Then the drain, *C*, is closed and 50 cc. of absorbing solution are pipetted into the absorber by refill pipet, *D*. The solution is allowed to come to the temperature of the thermostatic bath, and carbon dioxide–free air is passed through the solution for about 30 seconds at a rate of about 300 cc. per minute to stir the solution and establish equilibrium. This is done by turning the three-way stopcock, *J*, so that air is drawn through the soda-lime tube, *N*, and then applying suction by turning the three-way stopcock, *I*. The suction is then removed by turning stopcock *I*, and the resistance of the quiescent solution is measured by applying the Wheatstone bridge and taking a reading when a steady value is reached, which occurs in a few minutes. Samples of air are collected in 2.5-liter Baker Chemical Co. bottles, *P*, which are fitted with rubber stoppers and two glass tubes. One tube extends to the bottom of the bottle and the other is flush with the stopper. The outside ends of the tubes are fitted with short lengths of rubber tubing and screw clamps. The rubber stoppers are also tightly tied with cord to the necks of the bottles, so that they cannot work out to let leakage occur. The volumes of the bottles ("sampling bottles") are accurately determined. A sample of air is obtained as described below, and the sampling bottle sealed off by screwing the clamps tight.

When ready for analysis, the short glass tube of the sampling bottle, *P*, is connected to the intake of the absorber at *Q*, and the long glass tube is connected to a tube leading from a 19-liter bottle, *K*, which is filled with distilled water whose carbon dioxide content is maintained in equilibrium with that of the outside atmosphere by leading air in from outside and bubbling through the water. Then the three-way stopcock, *J*, is turned so that the sampling bottle, *P*, is connected to the intake of the absorber. The clamps of the bottle are released and suction is applied by turning *I*. The air is aspirated through the absorber at a rate of 350 cc. per minute, and is replaced by distilled water from *K*. As soon as the sampling bottle is filled with water, *J* is turned so that air remaining in the tube is washed through the absorber by carbon dioxide–free air from *N*. The carbon dioxide–free air is allowed to aspirate 30 seconds and the suction removed. The final resistance of the solution is measured as before. The difference between the initial and final resistances of the solution is obtained, and the amount of carbon dioxide absorbed is obtained from a calibration curve which gives the relation between the differences in initial and final resistance and the carbon dioxide absorbed.

The construction of the calibration curve and calculation of carbon dioxide are discussed below. For the Wheatstone bridge a 110-volt, 60-cycle alternating current was used as a source of electrical energy. A diagram of the bridge is given in the upper right-hand corner of Figure 2. It consists of Leeds and Northrup equipment, an alternating current galvanometer with lamp and scale, a Kohlrausch slide wire with auxiliary resistances, and a 4-dial noninductive resistance box. The bridge is similar to one described by Leeds and Northrup (*5*).

Calibration of Absorber

A rough calculation for the absorber indicated that the absorption of the carbon dioxide of 2.5 liters of ordinary air (approximately 1.4 mg.) in 50 cc. of the absorbing solution would produce a change of approximately 30 ohms. This proved useful in ascertaining by electrical measurement when, for the construction of a calibration curve, appropriate amounts of carbon dioxide had been absorbed by the solution. The titration method of Walker, Bray, and Johnston (*10*) was used to calibrate the absorber, and the technic is similar to that employed and described by Thomas (*9*). A calibration curve was plotted using the ohms difference in resistance as abscissa and the milligrams of carbon dioxide absorbed as ordinate. The calibration curve is given in Figure 3 and is seen to be almost linear. Consequently, small variations in the initial resistances of the solutions will not introduce a significant error, since it is the difference in initial and final resistances that is considered, and a small variation in initial resistance will not sensibly change the relation between the difference in resistance and the amount of carbon dioxide absorbed. The amounts of carbon dioxide absorbed may now be obtained from the calibration curve by finding the point on the curve corresponding to the difference in resistance obtained and reading off on the ordinate the amount of carbon dioxide absorbed. This method, however, is tedious and subject to visual errors involved in obtaining the amounts of carbon dioxide absorbed. Another method is to derive a formula from the curve, relating the difference in resistance and the carbon dioxide absorbed. The method of deriving the formula is developed below.

On the basis that ordinary air contains approximately 0.55 mg. of carbon dioxide per liter, 2.5 liters will contain about 1.4 mg. In the photosynthesis and respiration studies, the carbon dioxide content of the air seldom deviated more than 30 per cent above or below the normal concentration. Therefore the portion of the curve between 1.0 and 1.8 mg. of carbon dioxide was sufficient for determinations. If a straight line is drawn joining

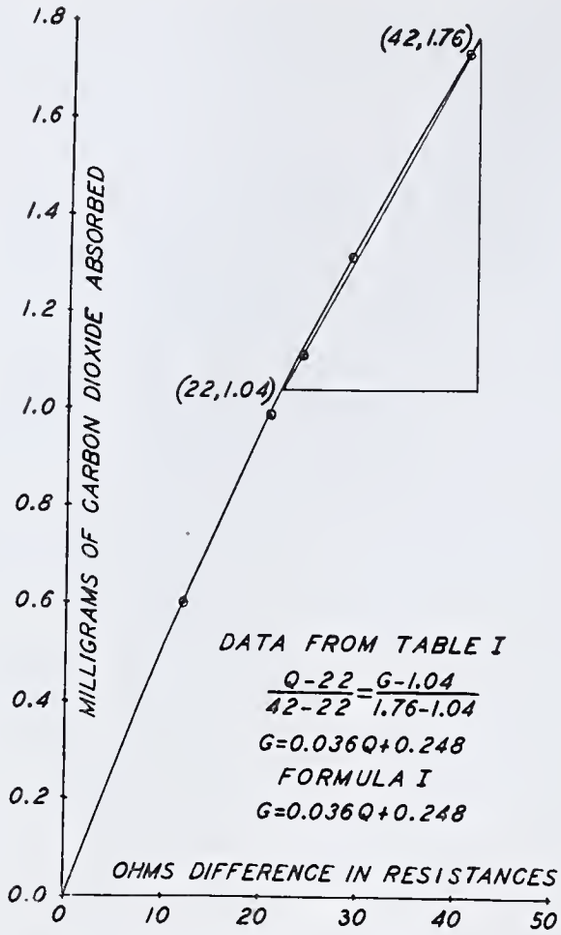

FIGURE 3. CALIBRATION GRAPH OF ABSORBER

the points (22, 1.04), (42, 1.76) as in Figure 3, the straight line and the curve within the interval of the points do not differ appreciably. Values may therefore be taken along the straight line without appreciable error. From analytical geometry, it is known that a straight line can be represented by a linear function. Using the two-point formula (*8*) for deriving the equation of a straight line, we obtain $G = 0.0360\ Q + 0.248$ for the equation, where G is the milligrams of carbon dioxide absorbed, and Q is the difference in resistances expressed in ohms. This formula may now be used in place of the graph. By mathematical methods it is possible to obtain more complicated formulas which would approximate the curve more closely, but the straight-line function was sufficient for the author's purpose.

Precision of Apparatus

In testing the precision of the apparatus, it was decided to make duplicate determinations on ordinary air. Two sampling bottles filled with equilibrium water were clamped in inverted positions on ringstands, which with the bottles were taken outside and placed on the roof of the Plant Science building, an elevation over 20 meters (60 feet) above the ground. The bottles were within 60 cm. (2 feet) of each other, the air circulation was very good, and there were no sources of carbon dioxide in the vicinity which might disturb the tests. The operator withdrew and the bottles were allowed to stand several minutes to dissipate any carbon dioxide from the breath of the operator. Then, holding his breath, the operator approached, unscrewed the clamps on the bottles, and immediately withdrew again. The water ran out into collecting vessels and air entered the bottles. The sampling bottles were allowed to stand in position for 30 minutes until they had reached air temperature. Then they were sealed off by screwing the clamps tight, and were taken into the laboratory where they were analyzed. Besides the samples taken on the elevation, a few samples were taken in the greenhouse and orchard. The water in the collecting vessels was poured back into the 19-liter bottle, *K*, Figure 2, and used over again.

A representative portion of the data is given in Table I. The milligrams of carbon dioxide per liter of air are obtained by dividing the carbon dioxide absorbed by the volume of the sampling bottle. The results indicate that the maximum error is less than 2 per cent and the average error approximately 1 per cent of the total concentration. Tests were also made using a Sargent wet-test gas meter in place of the sampling bottles and drawing 2.5-liter samples of outside air through the aspirator. The results (not given) are in accord with those obtained with the sampling bottles.

A further test was made to ascertain to what extent the carbon dioxide content of the air in the sampling bottles might be affected by carbon dioxide absorbed or evolved by the water used to displace the air in the bottles. The extent of this error would be dependent on the variation of the carbon dioxide content of the sample from that of ordinary air, temperature changes in the equilibrium water, and the time or duration of taking a sample. In the author's experiments, care was taken to keep the equilibrium water at a constant temperature of 25° C. and consequently no experiments on the temperature effect were made. In Table II are given the results of some experiments on the effect of the time or duration of sampling. Samples of air of various carbon dioxide concentrations were prepared, and these concentrations are expressed in column 5 of Table II as percentages of the normal atmospheric concentration at that time with which the water was in equilibrium. Some preliminary experiments were made to ascertain to what extent the equilibrium water might influence the carbon dioxide content of the sample when the total time required for taking the sample and aspirating it was 10 to 12 minutes.

A known volume of the sample (2268 cc.) was aspirated through the absorber, using a calibrated bulb with mercury to measure the volume of the sample. A second portion of the same sample was collected in a sampling bottle by the usual procedure and aspirated through the absorber. In both cases the air was saturated with water vapor, so that no correction was necessary. The concentration of carbon dioxide is given in column 4. In column 7 is given the total time required for taking a sample and aspirating it through the absorber. Since the time of aspiration was always 7 minutes, the actual time taken for collecting a sample may be obtained by subtracting 7 minutes from the total time. The intervening time between sampling and aspirating, during which the sample was not exposed to the water, is not taken into account. The percentage error given in column 6 is

TABLE I. TEST OF PRECISION OF APPARATUS

Date	Time Hour	Carbon Dioxide Absorbed	Volume of Sampling Bottle	Carbon Dioxide	Error of Samples
		Mg.	*Cc.*	*Mg./l.*	%
11/4/34	12 N.	1.409	2500	0.5636	
		1.403	2510	0.5590	0.82
11/4/34	3 P. M.	1.410	2500	0.5640	
		1.400	2510	0.5578	1.11
11/6/34	8 A. M.	1.344	2510	0.5355	
		1.347	2510	0.5367	0.22
11/6/34	12 N.	1.331	2475	0.5378	
		1.331	2465	0.5400	0.41
11/7/34	9 A. M.	1.354	2510	0.5394	
		1.354	2510	0.5394	0.00
11/7/34	12 N.	1.321	2465	0.5359	
		1.311	2475	0.5297	1.17
11/8/34	9 A. M.	1.412	2510	0.5625	
		1.396	2510	0.5562	1.13
11/8/34	12 N.	1.402	2475	0.5665	
		1.390	2465	0.5639	0.46
11/9/34	9 A. M.	1.419	2510	0.5653	
		1.416	2510	0.5641	0.21
11/9/34	12 N.	1.372	2500	0.5718	
		1.372	2500	0.5718	0.00
11/10/34	9 A. M.	1.359	2500	0.5436	
		1.369	2500	0.5476	0.74
11/10/34	12 N.	1.393	2510	0.5550	
		1.403	2510	0.5590	0.72

calculated by obtaining the difference in carbon dioxide concentrations per liter of air given in column 4 for the two procedures, and expressing this difference as a percentage of the concentration in atmospheric air at the time of sampling.

The data given in tests 1 to 3 indicate that for intervals of sampling and aspiration involving 10 to 12 minutes, with carbon dioxide concentrations as low as 47 per cent of normal, the error is less than 2 per cent. In tests 4 to 13 are given the results of samplings of various durations and carbon dioxide concentrations compared with samplings of 10 to 12 minutes. The results indicate (with one exception) that with a range of carbon dioxide concentration from 63 to 127 per cent of normal atmospheric concentration and 67 minutes for sampling and aspirating, the error in carbon dioxide concentration is less than 2 per cent of the concentration in normal air. For samples of briefer duration, the range of carbon dioxide concentration may very likely be increased without loss in precision, but the above range was sufficient for the author's purpose. It may be possible to reduce this error still further by the use of a sodium sulfate–sulfuric acid solution (*6*) to reduce the solubility of carbon dioxide or by some other liquid in which carbon dioxide is relatively insoluble. However, no tests on these methods were made.

Table II. Test of Error Due to Equilibrium Water

Test No.	Air Used	Method of Collection	Carbon Dioxide	Percentage of Atmospheric Concentration	Error	Time of Sampling	
			Mg./l.		%	*Min.*	*Sec.*
1	Prepared	Hg apparatus	0.2844	47	1.98	..	..
	Prepared	Sampling bottle	0.2964			10	50
	Atmosphere	Hg apparatus	0.6066			..	..
2	Prepared	Hg apparatus	0.4685	77	0.87	..	..
	Prepared	Sampling bottle	0.4738			12	30
	Atmosphere	Hg apparatus	0.6066			..	..
3	Atmosphere	Hg apparatus	0.6066	100	0.87	..	..
	Atmosphere	Sampling bottle	0.6013			10	0
4	Prepared	Sampling bottle	0.3840	69	0.39	10	30
	Prepared	Sampling bottle	0.3818			17	0
	Atmosphere	Sampling bottle	0.5603			..	..
5	Prepared	Sampling bottle	0.3243	58	0.21	10	30
	Prepared	Sampling bottle	0.3255			37	0
	Atmosphere	Sampling bottle	0.5603			..	..
6	Prepared	Sampling bottle	0.3406	61	1.07	10	30
	Prepared	Sampling bottle	0.3466			37	0
	Atmosphere	Sampling bottle	0.5603			..	..
7	Prepared	Sampling bottle	0.3551	63	1.22	10	30
	Prepared	Sampling bottle	0.3620			67	0
	Atmosphere	Sampling bottle	0.5658			..	..
8	Prepared	Sampling bottle	0.3855	69	2.20	10	45
	Prepared	Sampling bottle	0.3979			67	0
	Atmosphere	Sampling bottle	0.5624			..	..
9	Prepared	Sampling bottle	0.4066	73	1.67	10	45
	Prepared	Sampling bottle	0.4159			67	0
	Atmosphere	Sampling bottle	0.5584			..	..
10	Prepared	Sampling bottle	0.4920	88	1.36	10	30
	Prepared	Sampling bottle	0.4844			67	0
	Atmosphere	Sampling bottle	0.5598			..	..
11	Prepared	Sampling bottle	0.6340	113	1.34	10	30
	Prepared	Sampling bottle	0.6265			67	0
	Atmosphere	Sampling bottle	0.5603			..	..
12	Prepared	Sampling bottle	0.6929	122	0.58	10	30
	Prepared	Sampling bottle	0.6896			67	0
	Atmosphere	Sampling bottle	0.5658			..	..
13	Prepared	Sampling bottle	0.7141	127	0.37	10	0
	Prepared	Sampling bottle	0.7120			67	0
	Atmosphere	Sampling bottle	0.5603			..	..

Methods of Obtaining Air Samples

In Figure 4 is illustrated the apparatus for obtaining the air samples.

M represents a leaf on which the experiments are made and *K* its cup chamber (*3*) for drawing air over the leaf. The inlet of the cup chamber is fitted with a tube, *T*, which leads to outside air. A suction pump is attached at *J* for drawing air over the leaf and the rate of air flow is determined and adjusted by means of a Sargent wet-test gas meter, *I*, which is accurate to 28 cc. The leaf is subjected to the appropriate external conditions, side tube *E* on T-tube *G* is shut off, and the three-way stopcock turned so that air is drawn through the cup-chamber, *K*, through *L*, through *G* and *H* to the gas meter, *I*, and out at *J*.

The method of taking samples was as follows: A sampling bottle, *A*, was clamped in an inverted position in the ringstand, *F*. The side tube, *E*, was attached to the long tube of the sampling bottle and a small tube, *C*, drawn out to a jet was attached to the short tube of the sampling bottle. This small tube was adjusted to allow the water to run out at an appropriate rate, and consequently determined the rate of flow of air into the sampling bottle. Tubes were made which gave rates of air flow from 5 to 80 liters per hour, and where more accurate data were required, stopwatch readings were taken. In some cases when the sample was taken, the suction was shut off from the cup chamber by turning *H*, and the air flowed over the leaf directly to the sampling bottle. In other cases, suction was applied and a sample taken slowly over a long interval of time with a high rate of air flow over the leaf. In fact, a considerable number of variations were obtained, and records were kept of the temperature, barometric pressure, and other factors which might have their influence on the data. The method of taking the air check was very simple and consisted in attaching a sampling bottle to a tube which led air in directly from the outside. The difference in carbon dioxide content between the air that had passed over the leaf and the air check gave the amount of carbon dioxide absorbed or excreted by the leaf.

Suggested Modifications

Several modifications that might be suggested for the apparatus are as follows: By using an absorbing solution of one-half the concentration (0.0025 *N* sodium hydroxide) the accuracy for 2.5-liter samples of air would probably be increased and by using two or more absorbers and operating them alternately, greater rapidity of determinations could be obtained. While not done in the author's experiments, the apparatus could be assembled in a compact unit and adapted for transportation, a vacuum pump being used in place of the water-suction pump. It is not necessary to have the absorber of such excessive length, the length of the author's absorber being due to some tentative experiments made with high rates of air flow where a long absorber was necessary. Finally, the Wheatstone bridge circuit could

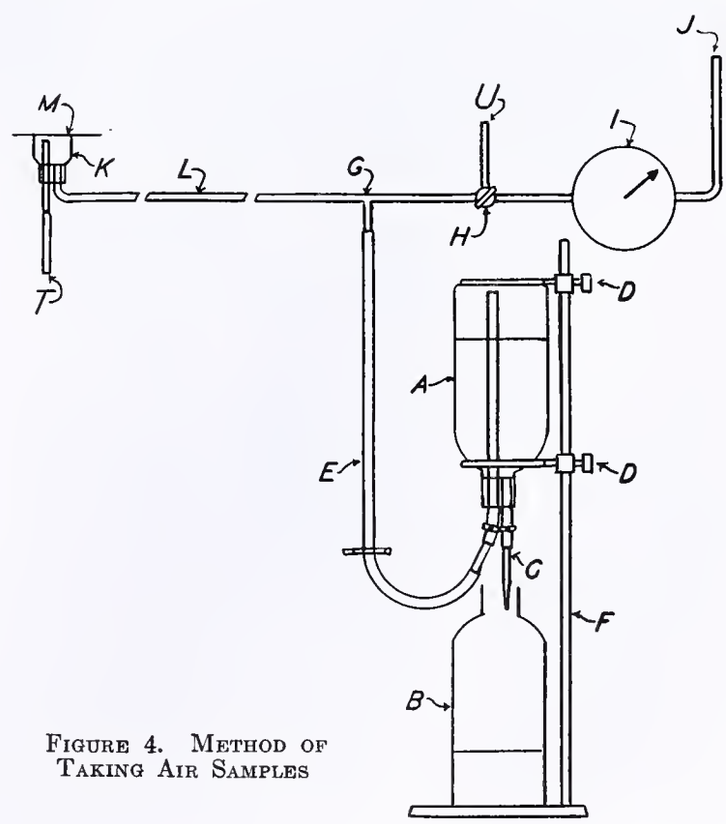

Figure 4. Method of Taking Air Samples

probably be modified to reduce the current applied to the absorber and the effects of polarization reduced.

Summary

Hand-operated apparatus has been constructed for the precise determination of carbon dioxide in ordinary air. The apparatus will determine the carbon dioxide in a 2.5-liter sample of air whose carbon dioxide content ranges from 65 to 125 per cent of that prevailing in ordinary air with a maximum error of 2 per cent and an average error of 1 per cent of the atmospheric concentration, and will allow of 2 or 3 determinations an hour. Except for one or two parts, the apparatus is constructed from standard laboratory equipment and employs the electrical conductivity principle with an absorber capable of removing all the carbon dioxide from an air stream of 350 cc. per minute by means of 50 cc. of 0.0049 *N* sodium hydroxide with 0.4 per cent *n*-butyl alcohol. Efficient absorption of carbon dioxide is obtained by the use of a fritted-glass plate and the butyl alcohol to break the air stream into small bubbles and decrease surface tension, allowing the bubbles to persist. Samples of air for analysis are collected in 2.5-liter bottles, transported into the laboratory, and determined for carbon dioxide by the apparatus.

Acknowledgment

The author is indebted to A. J. Heinicke of the Department of Pomology, Cornell University, Ithaca, N. Y., in whose laboratory and under whose general direction this work was carried out; to M. D. Thomas of the American Smelting and Refining Co., Salt Lake City, Utah, for his helpful advice and suggestions; and to C. C. Murdock of the Department of Physics, Cornell University, for the use of electrical equipment.

Since completion of this work and prior to publication, an article by Holdheide, Huber, and Stocker (*4*) has appeared which in some repects is similar to the work reported here.

Literature Cited

(1) Bruce, W. F., and Bent, H. E., *J. Am. Chem. Soc.*, **53**, 990–2 (1931).
(2) Heinicke, A. J., and Hoffman, M. B., *Science*, 77, 55–8 (1933).
(3) *Ibid.*, pp. 516–17.
(4) Holdheide, W., Huber, B., and Stocker, O., *Ber. deut. botan. Ges.*, **54**, 168–88 (1936).
(5) Leeds and Northrup Co., "Electrolytic Conductivity Measurements," Catalog 48, pp. 1–28, especially 5 (1931).
(6) Pacific Coast Gas Assoc., "Gas Engineer's Handbook," 1st ed., pp. 1–1017, especially 531, New York, McGraw-Hill Book Co., 1934.
(7) Rideal, E. K., and Taylor, H. S., *Analyst*, **44**, 89–94 (1919).
(8) Smith, P. F., and Gale, A. S., "Introduction to Analytic Geometry," pp. 1–217, especially 188, Boston, Ginn & Co., 1935.
(9) Thomas, M. D., Ind. Eng. Chem., Anal. Ed., **5**, 193–8 (1933).
(10) Walker, A. C., Bray, M. B., and Johnston, J. J., *J. Am. Chem. Soc.*, **49**, 1235–56 (1927).
(11) Wilson, P. W., Orcutt, F. S., and Peterson, W. H., Ind. Eng. Chem., Anal. Ed., **4**, 357–61 (1932).

Received August 5, 1936.

Rate of Dehydration of Ethyl Alcohol Using Metallic Calcium

G. FREDERICK SMITH AND C. A. GETZ, University of Illinois, Urbana, Ill.

THE small-scale dehydration of alcohol using barium oxide has been shown (*3*) to be preferable to the procedure using lime. The cost of porous lump barium oxide is low, and its dehydration reaction time starting with 95 per cent ethyl alcohol is but a fraction of that required using lime. The yield of finished product is excellent because of the slight tendency of the spent barium oxide to retain alcohol upon distillation of the final product. The dehydrated ethyl alcohol thus obtained is, however, but 99.5 per cent in strength as a result of the reversal of the dehydration reaction through the formation of barium ethylate:

$$BaO + 2C_2H_5OH \longleftrightarrow Ba(C_2H_5O)_2 + H_2O$$

The 99.5 per cent ethyl alcohol prepared using barium oxide is not sufficiently dry for many uses in analytical chemistry. (The alcohol-water solutions referred to in this paper are all calculated on the weight–per cent basis.) Commercial anhydrous ethanol prepared by the method of Young (*5*) from the ternary azeotrope, $C_2H_5OH—C_6H_6—H_2O$, and the binary azeotrope, $C_2H_5OH—C_6H_6$, contains ordinarily 0.1 to 0.2 per cent of water. For the completion of the dehydration of both these products, a rapid method is therefore in demand. Metallic calcium has been previously shown (*3*) to be very effective in this capacity. It is the main purpose of the present paper to study further the reaction rate of calcium metal with ethyl alcohol containing less than 0.5 per cent of water. A further purpose is the determination of the minimum concentration of water in ethyl alcohol which will negatively catalyze the exothermal reaction between ethyl alcohol and metallic calcium to form calcium ethylate with the vigorous evolution of hydrogen.

Reactions between Metallic Calcium and Ethyl Alcohol

Boiling ethyl alcohol containing small amounts of water when placed in contact with metallic calcium gives rise to the following reactions:

$$C_2H_5OH + 2H_2O \text{ (less than 0.5 per cent)} + Ca \longrightarrow Ca(OH)_2 + H_2 \quad (1)$$

$$2C_2H_5OH + H_2O \text{ (less than 0.2 per cent)} + Ca \longrightarrow Ca(C_2H_5O)_2 + H_2 \quad (2)$$

$$Ca(C_2H_5O)_2 + 2H_2O \longrightarrow Ca(OH)_2 + 2C_2H_5OH \quad (3)$$

Reaction 1 is slow and is accompanied by the formation of gradually increasing amounts of calcium hydroxide which is practically insoluble in alcohol of the strength indicated. The evolution of hydrogen is so slight that ordinary qualitative tests for it are not effective. A large excess of metallic calcium in the form of 3-mm. wire or rough turnings will hasten the reaction, but provision must be made for its quick removal from the boiling alcohol when Reactions 2 and 3 set in. Reactions 2 and 3 are very rapid when the alcohol has reached the 99.8 per cent stage (0.2 per cent of water). The

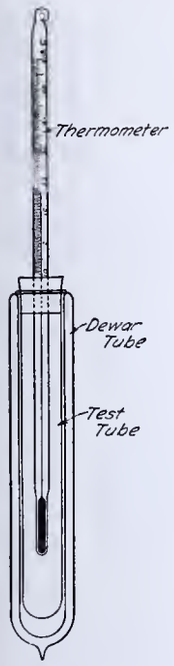

FIGURE 1. APPARATUS ASSEMBLY FOR DETERMINING CRITICAL SOLUTION TEMPERATURE

latter reactions are highly exothermal, and the rate of evolution of hydrogen in case of Reaction 2 is vigorous and can easily be followed by the usual qualitative explosion test, using an inverted test tube over the reflux condenser's drying tube ordinarily used to prevent return flow of atmospheric moisture to the reaction flask. Besides the noticeable development of heat due to Reaction 2 and the test for evolved hydrogen, there is also unmistakable evidence provided by the formation of a gelatinous precipitate which cannot be confused with the earlier formation of calcium hydroxide turbidities. Reaction 3 is without doubt the most rapid of the three. Calcium ethylate is sufficiently soluble in absolute ethyl alcohol to be used to dehydrate high-grade ethyl alcohol very effectively. Since solutions of calcium ethylate are easily prepared by use of Reactions 2 and 3, a more thorough study of them is much to be desired.

Application of Critical Solution Temperature Method

For the purpose of investigating the velocity of Reactions 1, 2, and 3, a rapid and accurate method for the determination of small amounts of water in ethyl alcohol is in demand. The use of small samples for this determination would be a distinct advantage. The critical solution temperature method of Crismer (*1*) is admirably adapted to fulfill both demands. This method has been investigated and found to be entirely satisfactory by Osborne, McKelvey, and Bearce (*2*). The method in brief consists in the determination of the consolute temperature of the conjugate system kerosene–absolute ethyl alcohol. (For use in connection with this method any type of kerosene may be used. The critical solution temperature with absolute ethyl alcohol may vary with samples from different sources, but if too high can be lowered by addition of petroleum ether.) The calibration of a graph relating the consolute temperature thus found with the change in critical solution temperature upon the addition of increasing small additions of water to the ethyl alcohol, completes the standardization required.

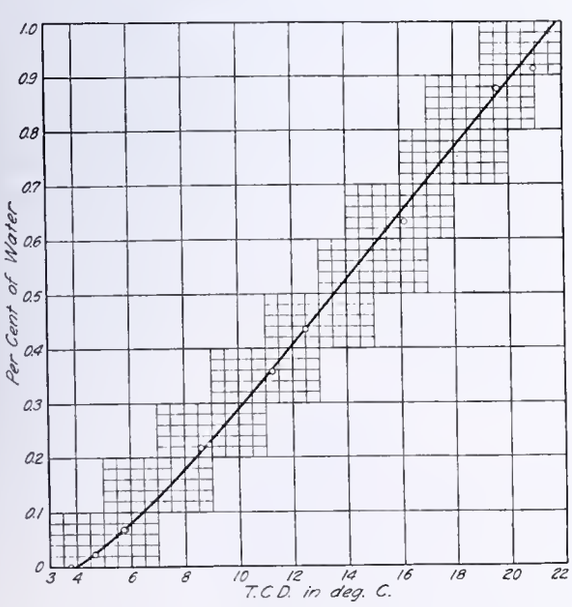

FIGURE 2. CRITICAL SOLUTION TEMPERATURE GRAPH FOR LOW-RANGE AQUEOUS ETHYL ALCOHOL

TABLE I. CALIBRATION DATA FOR CRITICAL SOLUTION TEMPERATURE DIAGRAM

(Low-range, aqueous ethyl alcohol)

Absolute Ethanol	Ethanol 10.446 % H_2O	Water Calcd.	Critical Solution Temperature
Grams	*Grams*	%	° *C.*
....	....	0.00	3.75
22.7516	0.0510	0.023	4.65
15.9680	0.1049	0.068	5.80
14.6930	0.3119	0.217	8.60
19.7553	0.5975	0.307	10.10
18.6657	1.2042	0.632	16.15
23.1732	0.5088	0.224	8.90
29.3854	1.2727	0.434	12.50
24.6240	2.3609	0.914	20.95
30.8745	2.4912	0.876	19.60
30.6852	2.8126	0.877	19.55
30.0951	0.3780	0.125	6.35
30.7653	0.1835	0.069	5.75
30.8642	0.9650	0.356	11.25

For the analysis of the unknown alcohol containing small amounts of water, the process is then reversed. The consolute temperature is determined for the system, kerosene–high-grade ethyl alcohol, and from the calibration graph the percentage of water is estimated. The determinations are easily made accurate to within 0.01 per cent of the true water content in the alcohol and require but a few minutes to be carried out, using 5 ml. or less of the samples of alcohol in question (*1*, *2*).

A drawing of the apparatus assembly is given in Figure 1.

The sample, 5 ml. of the alcohol, is placed in the test tube shown and 4.5 to 5.0 ml. of kerosene are added. The test tube is stoppered, using a close-fitting one-hole rubber stopper through which is inserted the specially designed thermometer. This thermometer is calibrated between the temperatures −10° and +60° C. with markings for each 0.05° which are 0.7 to 0.8 mm. wide. The lower half of the thermometer is uncalibrated and of such length that the bulb of the thermometer is just completely immersed in the mixture of kerosene and alcohol being examined. The sampling test tube is a stock article of Pyrex glass, 19 × 145 mm. with a flanged top and of 30-ml. capacity. The unsilvered Dewar jacket for minimizing temperature gradient between the sample tube and the surroundings is of Pyrex, baked and outgassed 6 to 8 hours at 500° C. It is 20 mm. in inside diameter, 30 mm. in outside diameter, and 145 mm. long. By use of this assembly of apparatus, if the mixed components of which the consolute temperature is to be determined are chilled below the critical solution temperature while outside the Dewar, the fine adjustment is more reasily obtained after the introduction of the sample tube within the Dewar. In the experiments listed in Table I, a thermometer of narrower range than that usually used, shown in Figure 1, was employed. It read directly to 0.02° instead of 0.05° C.

Calibration of Critical Solution Temperature Graph

Weighed samples of anhydrous ethyl alcohol were adulterated by addition of weighed samples of aqueous ethyl alcohol of known strength, and the critical solution temperature was accurately determined. The absolute alcohol was made by the barium oxide–calcium metal process (*3*), the samples of anhydrous and aqueous alcohols used were weighed, using weighing burets previously described (*4*), and vacuum corrections to the weighings were applied. The results obtained for a series of reference aqueous alcohols containing between 0.00 and 0.914 per cent of water are given in Table I.

The data of Table I are plotted with the results shown in Figure 2. For water concentrations under 0.9 per cent and down to 0.2 per cent, a straight-line relationship exists. The change in critical solution temperature for each 0.1 per cent of water is 1.66°+. Below 0.2 per cent water concentration the slope of the curve changes in such manner as to increase

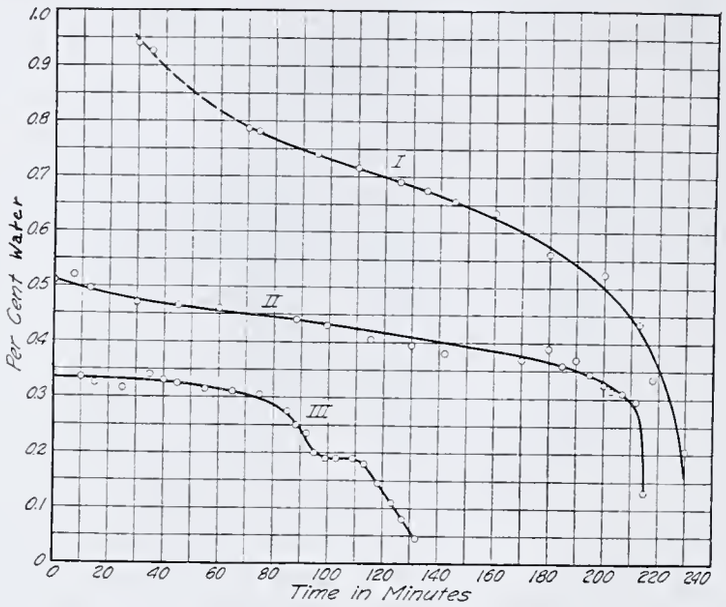

FIGURE 3. RATE OF DEHYDRATION OF ETHYL ALCOHOL

slightly the change in critical solution temperature for each fractional decrease in water down to absolute alcohol. An accuracy of 0.01° in determination of the critical solution temperature corresponds to an accuracy of 0.0006 per cent of water. Assuming temperature readings accurate to ±0.02°, an accuracy of ±0.001 per cent in the determination of water in ethyl alcohol is possible. Determinations in connection with the following experiments were considered accurate to the nearest tenth degree only since they were not filtered before the critical solution temperature was taken.

Velocity of Dehydration of 99.5 Per Cent Ethyl Alcohol

A 5000-ml. round-bottomed flask was suitably modified for the purpose by attaching a stopcock delivery tube near the bottom of the flask, approximately 25 mm. above the extreme bottom of the flask when in an upright position. The neck of the flask was fitted with a rubber stopper and 30-cm. (12-inch) reflux condenser through which a rapid stream of cold water was circulated. The top of the reflux condenser was provided with a drying tube with efficient desiccant to prevent return flow of moisture. Suspended through the reflux condenser was a tubular nichrome wire gauze hanging basket, 40 mm. in diameter and 150 mm. in length. By half filling the reaction flask for a given set of determinations, it could easily be lifted out of the field of reaction. This basket was charged with various amounts of 3-mm. calcium wire and the flask with 2500 ml. of ethyl alcohol of 0.34 to 1.08 per cent water content. The flask and contents were heated to boiling over an electric heater and samples withdrawn at definite intervals for analysis.

The data thus obtained are given in Table II, and are shown graphically in Figure 3.

From examination of Table II and Figure 3 it is observed that the dehydration of the alcohol follows two separate reaction speeds. The first stage represents Reaction 1. This reaction is complete to a sufficient extent (at a point between 0.2 and 0.3 per cent of water) no longer to inhibit Reactions 2 and 3. As a result of Reactions 2 and 3 the last of the water is rapidly reacted upon with the complete dehydration of the alcohol. Curve III, Figure 3, more clearly defines the point at which Reactions 2 and 3 set in, at slightly less than 0.2 per cent of water. The excess of calcium present in the experiments of Table II was calculated to be 315, 130, and 25 per cent, respectively. The failure of the experimental data to fall more closely upon a smooth curve is due to the fact that the samples taken from the reaction flask were not filtered before determination of the critical solution temperature. The suspension of insoluble matter made the determination of the consolute temperature difficult. The flat portion in curve III in the time interval between 95 and 115 minutes is probably due to the accumulation of insoluble matter on the unreacted calcium metal, only 2.5 grams of which remained at this stage of the reaction.

TABLE II. RATE OF DEHYDRATION OF 98.92, 99.49, AND 99.66 PER CENT ETHYL ALCOHOL

98.92% Ethyl Alcohol[a] Critical Solution Temperature			99.49% Ethyl Alcohol[b] Critical Solution Temperature			99.66% Ethyl Alcohol[c] Critical Solution Temperature		
Time *Min.*	° *C.*	H_2O %	Time *Min.*	° *C.*	H_2O %	Time *Min.*	° *C.*	H_2O %
0	24.9	...	0	13.9	0.51	0	11.0	0.34
10	23.8	...	7	14.1	0.52	10	10.9	0.335
30	21.0	0.940	13	13.7	0.495	15	10.7	0.325
35	20.7	0.925	30	13.5	0.47	25	10.6	0.315
70	18.5	0.785	45	13.2	0.465	35	11.0	0.34
74	18.4	0.780	60	13.15	0.46	40	10.8	0.33
95	17.7	0.740	88	12.75	0.44	45	10.7	0.325
110	17.3	0.715	99	12.6	0.43	55	10.6	0.315
125	16.9	0.690	115	12.2	0.405	65	10.5	0.31
135	16.7	0.675	130	11.95	0.395	75	10.4	0.305
145	16.4	0.655	142	11.8	0.38	85	9.9	0.275
160	16.1	0.635	170	11.5	0.37	88	9.4	0.25
180	14.8	0.560	180	11.9	0.39	92	9.1	0.235
200	14.2	0.525	185	11.3	0.36	95	8.5	0.20
213	12.7	0.435	190	11.5	0.37	99	8.3	0.19
218	11.9	0.335	195	11.1	0.345	103	8.3	0.19
230	8.6	0.205	200	10.7	0.325	109	8.3	0.19
...	....	...	203	10.55	0.315	113	8.1	0.18
...	....	...	207	10.5	0.31	118	7.4	0.145
...	....	...	212	10.2	0.295	123	6.7	0.11
...	....	...	215	7.1	0.13	127	6.1	0.08
...	....	...	...	...	...	132	5.1	0.045

[a] 2500 ml. of alcohol, 98 grams of calcium metal.
[b] 2500 ml. of alcohol, 25 grams of calcium metal.
[c] 2500 ml. of alcohol, 10 grams of calcium metal.

Use of Saturated Ethyl Alcohol Solution of Calcium Ethylate

A sample of anhydrous ethyl alcohol was allowed to react with metallic calcium until saturated with calcium ethylate. Samples of ethyl alcohol containing small amounts of water were treated by the addition of this saturated calcium ethylate, and allowed to digest at the boiling point 1 to 2 minutes, and a 5-ml. portion was then distilled out and analyzed. In all cases the alcohol so obtained was found to be anhydrous. The conclusions from the previous discussion relative to the speed of Reaction 3 were thus substantiated.

Summary

The reactions resulting from the dehydration of ethyl alcohol containing small amounts of water by use of calcium metal have been shown to be three in number. They have been characterized as to comparative rates and dehydration efficiencies.

The minimum concentration of water in alcohol sufficient to inhibit the reaction of calcium with ethanol to form calcium ethylate and hydrogen has been found to be 0.2 per cent of water.

A description is given of the Crismer method of determining the critical solution temperature in the conjugate system kerosene–ethyl alcohol as applied to velocity reactions in the study of the rate of dehydration of high-grade ethyl alcohol–water mixtures.

Literature Cited

(1) Crismer, *Bull. soc. chim. Belg.*, **18**, 18–54 (1904).
(2) Osborne, McKelvey, and Bearce, Bur. Standards, *Bull.* **9**, 328 (1913).
(3) Smith, IND. ENG. CHEM., Anal. Ed., **1**, 72 (1929).
(4) Smith, IND. ENG. CHEM., **18**, 1216 (1926).
(5) Young, *J. Chem. Soc.*, **81**, 707 (1902).

RECEIVED October 10, 1936.

ANALYTICAL EDITION

INDUSTRIAL and ENGINEERING CHEMISTRY

Harrison E. Howe, Editor

Direct Determination of Eleostearic Acid in Tung Oil

P. S. KU

Chemical Research Laboratory, Government Testing Bureau of Hankow, Hankow, China

METHODS hitherto proposed for estimating eleostearic acid in tung oil are mostly based upon calculations from unsaturation values. Thus in Kaufmann's method (*6*) eleostearic glyceride is calculated from the bromine number and the thiocyanogen number; in Toms' method (*17*), from iodine numbers by Wijs' method, and by his bromine vapor methods; and in Bolton and Williams' method (*2*), from the so-called "instantaneous iodine number." All these methods are indirect and hence their validity is limited by the faults of the methods for halogen values and also by the weak assumptions involved in their calculations. Instead of the calculation methods, Bolton and Williams (*2*), however, suggested another method to determine eleostearic glyceride by estimating the "polymerizable matter" of the oil (*1*). But the assumption on which this method was based seems to be inconsistent with Rhodes and Welz's theories of head gelatinization of tung oil (*11*), and experimentally Gardner (*3*) showed this method to be not dependable unless modified.

It seems that no direct method is yet available for determining eleostearic acid itself or its glyceride in tung oil. As the drying property of tung oil is chiefly due to its eleostearic acid content, it appears that a direct determination of it would give a better commercial evaluation of the oil than any consideration of constants or variables (*3*).

Separation of Eleostearic Acid

Two ways to separate eleostearic acid from the other fatty acids had been tried: by precipitation with catalysts and by suitable solvents. In the methods usually employed for determining tung oil in varnishlike products, such as those of Goldsmith (*4*), Scheiber (*12*), von Reibnitz (*10*), and Marcusson (*8*), the oil is separated out through precipitation with catalysts such as halogens, nitrites, stannic chlorides, etc. Such precipitation reactions are probably due to polymerization, and it appears possible then, to utilize these reactions for the determination of eleostearic acid in tung oil. Comparative tests on these catalysts showed that a solution of iodine in petroleum ether is most suitable because it gives a slow precipitation and a noncolloidal precipitate.

From 0.5 to 1.0 gram of pure dried eleostearic acid (prepared in this laboratory) was dissolved in 15 cc. of petroleum ether. The solution was ice-cooled and 5 cc. of cooled iodine reagent were added. It was allowed to stand in a cool place until precipitation was complete. The precipitates were filtered on a Gooch crucible, washed free from iodine, dried at 30° C. in a vacuum oven, and then weighed. In a test experiment three duplicates using the same sample of eleostearic acid gave the following percentages of precipitates: 83.03, 73.96, and 80.31. The inherent errors of the various procedures are too great to give concordant results.

Since the results of the precipitation method did not justify further study, the author turned to separation by suitable solvents. Before attempts were made to separate fatty acids, separation of their lead and magnesium soaps with both ether and petroleum ether as solvents had been tried. The results were unsatisfactory and hence the other way of separation was resorted to.

Unfortunately the literature gives only a few data on solubilities of eleostearic and oleic acids. The data collected from the literature and those obtained in this laboratory are given together in Table I.

A glance at Table I will show that the solvents listed would not permit very sharp separation. A study of the available solubility data of tung-oil acids in aqueous alcohol solutions, however, reveals that the separation of eleostearic acid from the other acids can be accomplished in alcohol solutions of proper strength at low temperatures. The solubilities of these acids in aqueous alcohol solutions of different strengths at 0° C. were carefully investigated. The results are given in Table II and plotted in Figure 1.

Figure 1 shows clearly that the complete separation of stearic and palmitic acids from eleostearic acid is impossible. The solubility difference between oleic and eleostearic acids is greatest as the percentage of alcohol increases

TABLE I. SOLUBILITIES OF THE FATTY ACIDS OF TUNG OIL

Solvent	Stearic Acid	Palmitic Acid	α-Eleostearic Acid	Oleic Acid[b]
Acetone	4.73 at 25°[a]	Soluble[b]	Very soluble[b]	Very soluble
Amyl acetate	11.19 at 25°[a]	16.6 at 25°[c]	Very soluble[b]	Very soluble
Carbon disulfide	19.20 at 25°[a]	Very soluble[b]	Very soluble[b]	Very soluble
Carbon tetrachloride	10.25 at 25°[a]	Soluble[b]	Very soluble[b]	Very soluble
Chloroform	15.54 at 25°[a]	Very soluble[b]	Very soluble[b]	Very soluble
Ether (absolute)	20.04 at 25°[a]	32.8 at 25°[c]	Very soluble[b]	Very soluble
Ethyl acetate	7.36 at 25°[a]	10.7 at 25°[c]	Very soluble[b]	Very soluble
Nitrobenzene	0.067 at 0°[a]	0.14 at 0°[c]	3.75 at 0°[c]	Soluble
Toluene	13.61 at 25°[a]	Soluble[b]	Very soluble[b]	Very soluble
Petroleum ether	Very soluble[b]	Soluble[b]	Very soluble[b]	Very soluble

[a] Solubilities in grams per 100 grams of solution.
[b] Results of author's investigation. Others were quoted from Seidell (*14*).
[c] Solubilities in grams per 100 grams of solvent.

to 76 per cent by volume or 68.98 per cent by weight. This particular strength of alcohol is, therefore, chosen for the separation.

Development of the Method

As early as 1915 Schumann (*13*) described a method to determine the "eleomargaric acid" in tung oil by means of an alcohol solution which was found also to contain about 76 per cent of alcohol by volume. But unfortunately the original procedure gave too few details and the results of more than twenty trials made by the author showed that it was far from being a quantitative method.

Based upon the same principle, a new procedure was then worked out. A 2-gram sample was saponified with 20 cc. of 5 per cent alcoholic potassium hydroxide and then acidified with 25 cc. of 2 *N* sulfuric acid. The solidified fatty acid was dissolved in 25 cc. of 76 per cent alcohol (by volume) and the solution was allowed to cool for crystallization. The following conditions were found to be optimum: (a) saponification with 90 per cent alcoholic potassium hydroxide; (b) a temperature of 41° ± 1° C. for acidification with a duration of 10 minutes; (c) strength of alcohol for crystallization, 76.0 to 76.1 per cent by volume; (d) temperature of cooling bath, 0° C.; (e) washing the acid once with 60 per cent alcohol.

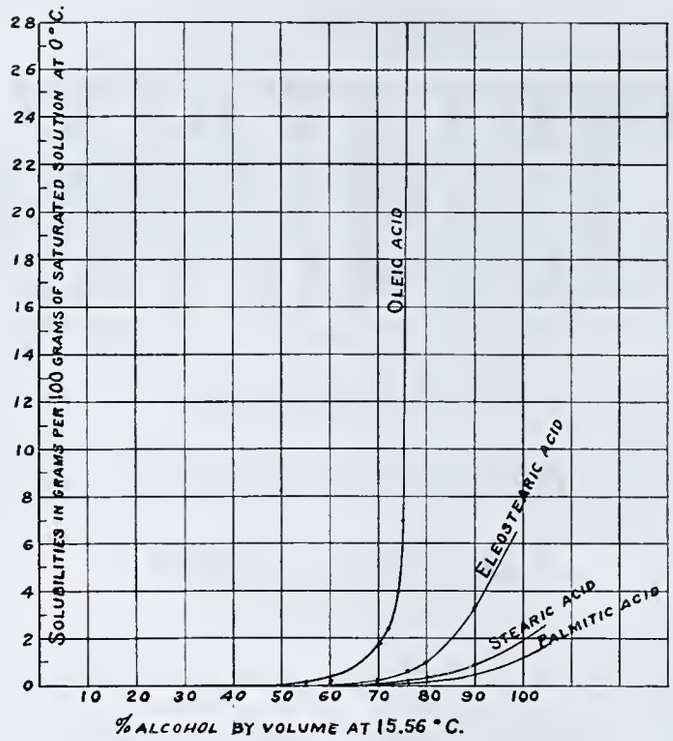

FIGURE 1. SOLUBILITIES IN AQUEOUS ALCOHOL SOLUTIONS

TABLE II. SOLUBILITIES OF TUNG-OIL ACIDS IN AQUEOUS ALCOHOL AT 0° C.

(Grams per 100 grams of saturated solution)

Alcohol by Volume at 15.56° C.	Oleic Acid	α-Eleostearic Acid	Stearic Acid	Palmitic Acid
%				
54.84	0.20	0.023	0.048	0.027
59.61	0.42	0.047	0.070	0.041
70.19	1.82	0.267	0.113	0.054
71.87	2.44	...	...	...
73.93	4.06	...	...	...
75.07	7.06	...	...	...
76.05	28.00	0.614	0.22	0.105
80.33	...	0.983	0.37	0.165
90.14	...	3.28	0.88	0.449

Reagents

POTASSIUM HYDROXIDE. A 5 per cent solution of potassium hydroxide in 90 per cent alcohol (by volume) containing 5 grams of E. Merck's reagent potassium hydroxide per 10 cc. of alcohol. The alcohol used for this purpose should be previously treated with potassium hydroxide and silver nitrate, allowed to stand for a few days, and then distilled and diluted. Solutions made in this way will not readily turn yellow on standing.

DILUTE SULFURIC ACID. A 2 *N* solution made by diluting to 300 cc., 16 cc. of the C. P. acid of specific gravity 1.84.

ALCOHOL FOR CRYSTALLIZATION. About 80 volumes of purified alcohol (95 per cent), less if absolute alcohol is used, are diluted with water to 100 volumes. The volume percentage of alcohol at 15.56° C. is determined by the pycnometer method, and the strength adjusted so that it is between 76.00 and 76.10 per cent. It is advisable to make up a large volume of solution at start and check its alcohol strength from time to time.

ALCOHOL FOR WASHING. A 60 per cent alcohol solution made by diluting with water 64 volumes of purified alcohol to 100 volumes and adjusting the strength to 60 per cent alcohol by volume.

STANDARD SODIUM HYDROXIDE. A solution of 0.2 *N* sodium hydroxide standardized against C. P. benzoic acid or standard sulfuric acid, using phenolphthalein as indicator.

PHENOLPHTHALEIN INDICATOR. One gram of phenolphthalein dissolved in 100 cc. of neutralized 95 per cent alcohol.

Procedure

Saponify from 2.00 to 2.05 grams of oil with 20 cc. of alcoholic potassium hydroxide in an Erlenmeyer flask by refluxing on a water bath for 1 hour. Allow the flask to stand for a few minutes in a water bath kept at 41° ± 1° C. Then add slowly 25 cc. of dilute sulfuric acid and maintain the temperature inside and outside the flask at 41° ± 1° for just 10 minutes, rotating the flask occasionally. Then take out the flask, add 25 cc. of water, and cool in ice water until the fatty acids are solidified to a cake. Filter by decantation on a small filter paper about 7 cm. in diameter, applying suction if necessary. Then, keeping most of the cake in the flask, wash the flask and filter paper thoroughly until free from sulfate ion. Carefully turn the flask with the cake in it upside down and drain as dry as possible. Press the filter paper dry between sheets of absorbent paper. Then dry the flask and the filter paper at room temperature (about 20° C.) in a vacuum desiccator under a vacuum of 10 to 20 mm. of mercury for just 30 minutes. There should be now no water visible on its wall or on the surface of the cake. Open the desiccator and dissolve the fatty acids in the flask and those on the filter paper in exactly 25 cc. of 76 per cent alcohol by pouring the warmed alcohol through the filter paper into the flask. Gently warm the flask, if necessary, to dissolve any undissolved cake, then cork, and immerse the flask in a bath of ice and water. Put the bath in the specially constructed refrigeration box, or an electric refrigerator, maintained between −3° and 0° C. and allow to stand overnight. The temperature of the bath next morning should be between 0° and 1° C.

Fit up a jacketed Büchner funnel 5 to 6 cm. (2 to 2.5 inches) in diameter and surround the funnel with ice and water. Filter

TABLE III. ANALYTICAL CONSTANTS[a] OF TUNG OIL

	Ta Mee Tung	Shiao Mee Tung	Tsai Tung
Specific gravity, 15.5° C.	0.9415	0.9415	0.9416
Acid value	1.5	3.6	1.2
Saponification value	191.9	191.8	192.0
Refractive index, 25° C	1.5181	1.5183	1.5178
Iodine number (Wijs)[b]	168.7	170.1	168.2
Worstall's test	5′ 28″	5′ 28″	5′ 42″

[a] Analyses done according to the methods of this bureau, which are essentially the same as A. S. T. M. methods.

[b] Values corrected to standard conditions proposed by Ho, Wan, and Wen (*5*).

TABLE IV. PRECISION OF THE METHOD

Experiment Number	Shiao Mee Tung: Eleostearic acid, uncorrected	Shiao Mee Tung: Deviation from arithmetical mean	Ta Mee Tung: Eleostearic acid, uncorrected	Ta Mee Tung: Deviation from arithmetical mean	Tsai Tung: Eleostearic acid, uncorrected	Tsai Tung: Deviation from arithmetical mean
	%	%	%	%	%	%
1	76.0	0.02	76.5	0.10	75.9	0.10
2	77.0	0.07	76.4	0.06	75.8	0.01
3	77.0	0.05	76.5	0.13	75.8	0.07
4	76.9	0.06	76.3	0.07	75.6	0.12
5	77.1	0.13	76.2	0.14	75.9	0.11
6	76.9	0.10	76.5	0.10	75.8	0.06
7	77.0	0.00	76.3	0.12	75.7	0.08
8	76.9	0.12	76.3	0.09	75.6	0.13
		Av. 0.07		Av. 0.10		Av. 0.09
Arithmetical mean	77.0		76.4		75.8	
Average deviation/arithmetical mean		0.9 part per 1000		1.3 parts per 1000		1.3 parts per 1000

the creamlike crystals on the cooled funnel and suck the eleostearic acid dry with a vacuum pump. Wash first the flask and then the acid with 15 cc. of 60 per cent alcohol which has been previously cooled overnight in the refrigeration box. Suck again with pump until no liquid drops. Dissolve the crystals in warmed redistilled alcohol and wash the top and tip of the funnel thoroughly, using a total volume of about 65 cc. of alcohol. Titrate the acid with 0.2 N sodium hydroxide, using phenolphthalein as indicator. 1 cc. of 0.200 N sodium hydroxide = 0.05566 gram of eleostearic acid.

Precision

Three genuine and pure specimens of tung oil known as "Ta Mee Tung," "Shiao Mee Tung," and "Tsai Tung" in native terms were used to test the precision of the proposed method. These specimens were expressed from seeds of *Aleurites fordii* bought in Szechuan in January, 1935. Their analytical constants are given in Table III.

A series of eight determinations was made on each specimen, following strictly the procedure described above. No result was rejected unless the difference between the doubtful determination and the arithmetical mean of the other determinations was four times or more the average deviation of the other determinations, because it can be shown from the theory of probability that such a determination is 99 per cent the result of accidental errors (*9*). The results given in Table IV show the concordance of checks by careful workers. The precision of the method was found to be from 0.9 to 1.5 parts per 1000. Unnecessary exposure to air, warmth, and light of both the crude and crystallized eleostearic acid should be avoided as much as possible. Experience shows that it is advisable not to carry out this procedure in places where the temperature is above 25° C.

Constant Error of the Method

The acid crystals finally obtained in this method were found to have usually a melting point of 46–47.5° C. (m. p. of pure α-eleostearic acid, 48.0°) and a Wijs iodine number in 1-hour contact of about 175–183. These constants definitely show that the crystals are mainly α-eleostearic acid but slightly adulterated with palmitic and stearic acids and traces of oleic acid, as is to be expected from solubility considerations. It is evident that the presence of palmitic, stearic, and oleic acids will raise the result, while the eleostearic acid which is inevitably present in the mother liquor and in the washings will cause a lowering in the result. The sum of these errors makes the constant error of this method. To test this error, control experiments were made in which mixtures of pure eleostearic acid and other tung-oil acids were employed, but for reasons mentioned above the author did not use the halogen methods to test the proposed method.

The pure α-eleostearic acid used was prepared by a modified procedure of Thomas and Thomson (*16*) without the use of carbon dioxide.

Reflux 75 grams of pure tung oil for 1 hour with 300 cc. of 10 per cent potassium hydroxide in 90 per cent alcohol. Decompose the soap with 400 to 450 cc. of 3 N sulfuric acid warmed to 45° C. and keep the mixture at 40° C. for 10 minutes, stirring occasionally. Add 200 cc. of cold water and cool in ice until the acids solidify to a cake. Decant off the acid and wash the cake until free from sulfate ion. Drain and then dissolve in 300 to 350 cc. of warmed 90 per cent alcohol, and allow to stand overnight at 0° C. Filter in an ice-cooled funnel and wash three times with 30 to 35 cc. of cooled 90 per cent alcohol. Recrystallize twice in 150 and 130 cc. of 90 per cent alcohol, using each time a shorter period of cooling. For use in control experiments, a portion of crystals may be now taken out, dried in vacuum, and recrystallized twice in 76 per cent alcohol.

Solutions of eleostearic acid in 76 per cent alcohol were then prepared with these crystals and their strengths adjusted to proper values by titration with 0.2 N sodium hydroxide. For solubility determinations the crystals after being recrystallized thrice in 90 per cent alcohol were subjected to a fourth recrystallization in 90 per cent alcohol and then dried at about 20° C. under high vacuum. The final products from either procedure were found to have a melting point of 48.0° C.

Six kinds of solutions of eleostearic acid were freshly prepared and standardized, containing from 1.276 to 1.554 grams of this acid in each 25.0 cc. These correspond to from 65 per cent to 78 per cent of eleostearic acid in 2 grams of oil, which will nearly cover the range of percentages in ordinary tung oil. According to van Loon and Steger (*7*, *15*) tung oil contains about 13.6 per cent of oleic acid, 3.7 per cent of palmitic acid, and 1.2 per cent of stearic acid. To imitate this composition approximately on the basis of a 2-gram sample, 0.27 gram of oleic acid, 0.074 gram of palmitic acid, and 0.024 gram of stearic acid were mixed and dissolved by warming below 40° C. in 25-cc. portions of the six standard solutions of eleostearic acid and then the mixtures were allowed to stand overnight at 0° C. The eleostearic acid in each mixture was determined by the procedure proposed for tung oil. By analysis of six mixtures, the constant error of this method for a 2.00- to 2.05-gram sample was found to be from 20.6 to 25.0 parts per 1000 and the percentage of eleostearic acid found experimentally was lower than the theoretical value by approximately 1.6 per cent. Hence a correction of 1.6 per cent should be added to the experimental values. However, this correction is by no means very accurate, since the true percentages of oleic, palmitic, and stearic acids in tung oil have not yet been accurately determined.

Application of Method to Commercial Samples

As this method was developed and tested on genuine oils only, it is interesting that when applied to commercial samples it was found in general equally satisfactory. For use in test experiments, several samples with good analytical data were chosen from the exported oils which this bureau had examined during the period from May to November, 1935. In Table V there are given percentages of eleostearic acid and the analytical constants of the oils. It is important to note the consistent relationship between these percentages

Table V. Application to Commercial Samples

Oil No.	Refractive Index at 25° C.	Iodine No. (Wijs)	Acid Value	Saponification Value	Worstall's Test	Eleostearic Acid (Corrected) %	Mean	Average Deviation from Mean
2918	1.5169	166.8	2.9	191.3	6′ 32″	76.14 76.24 76.16 75.96	76.13	0.08
2926	1.5172	166.7	3.2	191.8	6′ 25″	76.55 76.29 76.80 76.51	76.56	0.14
2983	1.5173	167.1	2.6	191.5	6′ 23″	76.70 76.78 76.95 76.26	76.67	0.21
3030	1.5165	167.8	2.9	191.3	6′ 52″	75.51 75.63 75.33 75.43	75.48	0.10
3032	1.5166	167.9	2.4	192.0	6′ 52″	75.78 75.65 75.80 75.46	75.67	0.12
3263	1.5176	167.8	1.3	190.8	6′ 23″	77.19 77.11 77.13 76.87	77.08	0.10
3284	1.5179	167.6	1.4	191.7	6′ 17″	77.55 77.67 77.43 77.33	77.50	0.12

and the analytical constants, particularly the refractive indices, as this clearly shows the validity of the method.

Application to Adulterated Tung Oil

Before being applied to adulterated samples, the method had been tested on different vegetable oils commonly used as adulterants in tung oil. It was found that under the same treatment these oils yielded less than 10 per cent of residue insoluble in 76 per cent alcohol, except rapeseed and cottonseed oils which gave 28.6 per cent and 29.2 per cent, respectively. However, the melting point and iodine number of the crystals of pure tung oil are sufficient to show the identity of α-eleostearic acid, while the residues of other vegetable oils, including rapeseed and cottonseed oils, all behaved like mixtures upon heating, were incapable of being dried, had no definite melting points, but generally had very low iodine numbers. All these facts serve to distinguish clearly the fairly pure crystals of tung oil from the impure residues of other vegetable oils.

The applicability of this method to adulterated tung oil was tested on mixtures of pure tung oil with 2.5 per cent of six common adulterants. The eleostearic acids content of these mixtures were determined by the proposed method. They were found to be 1.70 to 1.98 per cent lower than that of the pure sample and by calculation this lowering would be about 1.3 per cent to 1.58 per cent for mixtures containing 2.0 per cent of adulterant. In the test experiments here described only mixtures with 2.5 per cent of adulterant were studied, for a further study on adulteration problems had been planned. However, the results thus far obtained (Table VI) show that this method is applicable to adulterated tung oil and that by means of it it is possible to detect adulterants in tung oil adulterated with 2.0 per cent or more of other vegetable oils. The precision of the method will be reduced when applied to adulterated samples.

Summary

From the study of solubilities of the fatty acids of tung oil, a method based upon the separation of eleostearic acid in 76 per cent alcohol at 0° C. has been developed for its direct determination in tung oil.

To make the method quantitative, the control of its variable factors was investigated in detail. The precision and constant error of this method were estimated and the necessary correction was ascertained.

The method has been found satisfactory with commercial samples on the market as well as with genuine and pure samples. The percentages of eleostearic acid are generally consistent with the important analytical constants which usually serve to indicate the quality of this oil.

Table VI. Application of Method to Adulterated Tung Oil

Mixture No.	Composition (by Parts)		Refractive Index at 25° C.	Eleostearic Acid of Pure Tung Oil %	Eleostearic Acid of Mixture %	Lowering %
10	Pure tung oil Stillingia oil	97.5 2.5	1.5169	77.35	75.37	1.98
20	Pure tung oil Poppyseed oil	97.5 2.5	1.5168	77.35	75.43	1.92
30	Pure tung oil Soybean oil	97.5 2.5	1.5168	77.35	75.47	1.88
40	Pure tung oil Rapeseed oil	97.5 2.5	1.5168	77.35	75.55	1.80
50	Pure tung oil Cottonseed oil	97.5 2.5	1.5168	77.35	75.65	1.70
60	Pure tung oil Sesame oil	97.5 2.5	1.5167	77.35	75.42	1.93

The method is also applicable to adulterated tung oil and may be used to detect 2 per cent or more of common adulterants in tung oil.

Acknowledgment

The author is greatly indebted to K. Ho and C. S. Wan for their valuable advice which has been very helpful to this investigation.

Literature Cited

(1) Bolton, E. R., and Williams, K. A., *Analyst*, **51**, 335 (1926).
(2) *Ibid.*, **55**, 360–7 (1930).
(3) Gardner, H. A., "Physical and Chemical Examination of Paints, Varnishes, Lacquers and Colors," 6th ed., p. 660, Washington, Institute of Paint and Varnish Research, 1933.
(4) Goldsmith, J. N., *J. Oil Colour Assoc.*, **9**, 342–51 (1926).
(5) Ho, Wan, and Wen, Ind. Eng. Chem., Anal. Ed., **7**, 96–101 (1935).
(6) Kaufmann, H. P., *Ber.*, **59B**, 1390–7 (1926).
(7) Loon, J. van, *Farben-Ztg.*, **35**, 1769 (1930).
(8) Marcusson, J., *Z. angew. Chem.*, **38**, 780–2 (1925).
(9) Mellor, J. W., "Higher Mathematics for Students of Chemistry and Physics," p. 533, 1909.
(10) Reibnitz, von, *Farben-Ztg.*, **34**, 266–8 (1929).
(11) Rhodes, F. H., and Welz, C. J., Ind. Eng. Chem., **19**, 68–73 (1929).
(12) Scheiber, J., *Farbe u. Lack*, **1930**, 513–14, 524–5.
(13) Schumann, C. L., J. Ind. Eng. Chem., **8**, 5–15 (1916).
(14) Seidell, A., "Solubilities of Inorganic and Organic Compounds," New York, D. Van Nostrand Co., 1928.
(15) Steger, A., and Loon, J. van, *J. Soc. Chem. Ind.*, **47**, 361T (1928).
(16) Thomas, A. W., and Thomson, J. C., *J. Am. Chem. Soc.*, **56**, 898 (1934).
(17) Toms, H., *Analyst*, **53**, 69–77 (1928).

Received September 11, 1936. Published with the permission of C. Y Wang, commissioner of the bureau.

The Fusibility of Coal Ash

J. J. BRENNAN, D. F. MITCHELL, F. P. TIERNEY, and W. C. THOMPSON
Northern States Power Company, Minneapolis, Minn.

The gas-furnace method for the determination of the fusibility of coal ash was adopted as a standard by the A. S. T. M. in 1924 (*2*). This method requires molded cones of the ash to be subjected to increasing temperatures. The fusing point usually reported is the softening temperature (*3*) recorded when the ash cone has fused down to a condition as shown by either cone 2 or cone 3 (Figure 1). The standard method permits a tolerance of 54° F. for the same laboratory and 90° F. for different laboratories.

Because of the difficulty of coördinating the softening temperature determined by the standard method and clinker formation, the time required to make the test, the tolerance permitted in duplicate determinations, and the difference in the results obtained by different laboratories (*1, 6*), the present investigation was undertaken.

Ten samples of coal ash, the softening temperatures of which had been reported by the Bureau of Mines in 1930 (*9*), were formed into cones and photographed to show their condition at various temperatures. The ten samples of ash were divided into two series: five with low softening temperature (series A) and five with high softening temperatures (series B). A plaque bearing

series A cones, which had been heated to 1800° F. in accordance with the standard method, was removed from the furnace and photographed. Another similar plaque was removed at 1850° F. and photographed, another at 1900° F., and so on for each 50° F. up to 2500° F. The photographs of these plaques are assembled in Figure 2. The cones of series B were treated in the same manner as series A cones for a temperature range of 2300° to 2850° F., as shown in Figure 3.

FIGURE 1

It is possible to decide on the softening points of these ashes by referring to the photographs and to the definition of the softening point, as explained previously in connection with Figure 1. It is unfortunate that the standard method permits the recording of the softening temperature when the cone has fused down to the condition as shown by either cone 2 or cone 3 (*3*). These cones are evidently not in the same condition in regard to fusion, since they differ in height and shape. The authors' interpretations of the softening points, guided by the condition of cone 2, Figure 1, are shown in Table I with the softening temperatures of these same ashes as determined and published by the Bureau of Mines (*9*).

With the exception of the softening points on ash 11 and ash 14, the results as shown by the photographs and as given by the Bureau of Mines are within the tolerances permitted

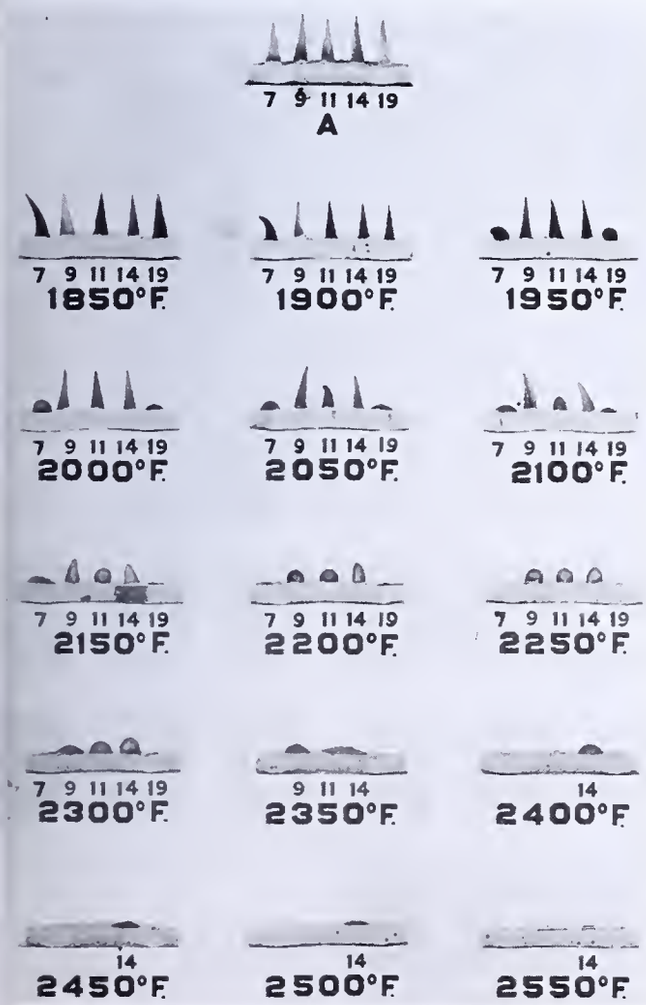

FIGURE 2

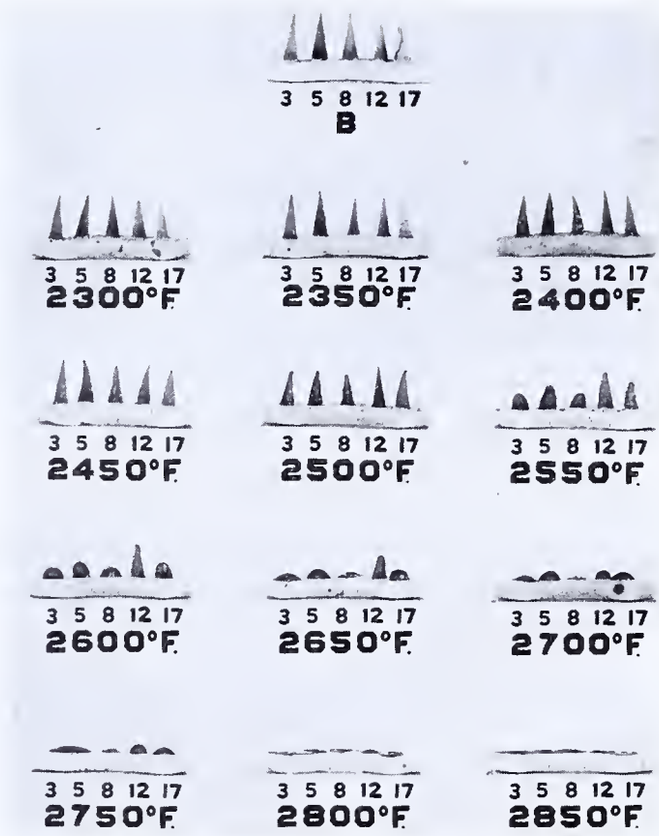

FIGURE 3

TABLE I. COMPARISON OF GAS-FURNACE SOFTENING TEMPERATURES OF COAL ASH

(As shown by photographs and as given by the Bureau o. Mines)

Series	Ash No.	Softening Temperature From photographs ° F.	Softening Temperature By Bureau of Mines ° F.	Difference ° F.
	7	2025	2055	30
	9	2275	2275	0
A	11	2300	2195	105
	14	2350	2200	150
	19	1975	2040	65
	3	2600	2595	5
	5	2625	2615	10
B	8	2575	2605	30
	12	2725	2705	20
	17	2650	2665	15

under the A. S. T. M. standard method. There is very close agreement between the softening points as shown by the photographs and as determined by the Bureau of Mines for the higher fusing ash represented by series B.

Attention should be called to the condition of cone 11. In making a fusion test of this ash by the standard method, it can be seen from Figure 2 that the condition defined as the softening point persists from 2150° to 2300° F. This appears to be due to peculiar characteristics of this ash, as will be shown below.

The value of ash-fusion tests depends not only on the accuracy of the method employed but also on the degree to which the results can be correlated with the behavior of the coal under furnace conditions. Heavy clinkers have been encountered throughout the ash-softening temperatures from 2200° to 2815° F. and no clinker trouble has been experienced with certain coals having ash-softening temperatures as low as 2388° F. (*5*). There appears to be a general relationship between the softening temperature and clinkering in the furnace (*4*), yet it is practically impossible to predict the behavior of ash in coals having softening temperatures in the neighborhood of 2400° to 2600° F. In many cases clinkering characteristics are not represented by the

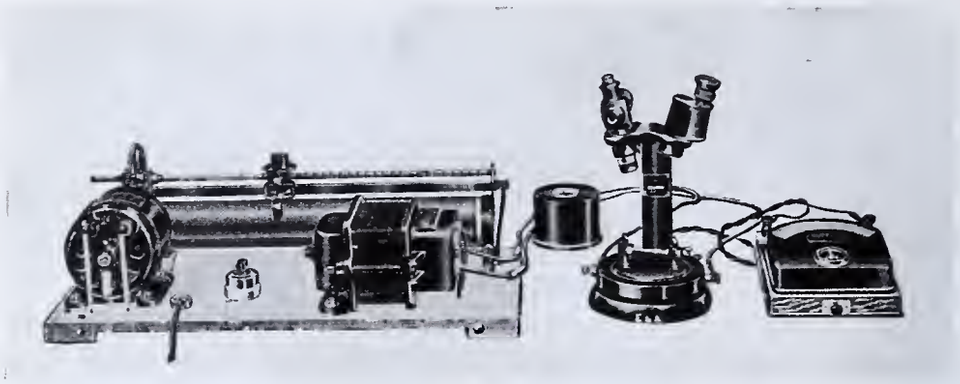

FIGURE 4

mere figures for the initial, the softening, and the fluid temperatures.

Since the standard method is time-consuming and does not lend itself to routine work where ash-fusion temperatures are required in minimum time, experiments were made with the more rapid De Graaf electric fusing method.

The apparatus, shown in Figure 4, consists of a platinum strip clamped in a horizontal position, enclosed in a metal cover containing a glass window through which the condition of the ash on the strip may be observed by means of a magnifier and through which the radiation pyrometer is focused on the strip so as to indicate the temperature. The platinum strip is heated by passing an electric current through it and the rate of heating is controlled by mechanical movement of contacts on the rheostat. Tubes at the base of the instrument permit the introduction of an oxidizing, neutral, or reducing atmosphere within the heating chamber.

In making the first experiments with the apparatus the instructions furnished by the manufacturer (*7*) were followed, but the results were not reliable. There was considerable confusion in regard to the meaning of the initial and the final points determined by the De Graaf apparatus when compared with the initial deformation, the softening, and the fluid temperatures by the gas-furnace method.

In 1930 the Bureau of Mines (*9*) reported the results of an investigation of the De Graaf apparatus in which four laboratories using it made determinations of the initial and the final points of nineteen samples of coal ash which were furnished by the Bureau of Mines. The results obtained in the four laboratories showed such decided discrepancies, not only in the results with the De Graaf apparatus but also between these results and those of the Bureau of Mines, determined by the gas-furnace method, that the De Graaf apparatus was not considered satisfactory for the determination of ash fusibility. Other tests were made (*8*) in various laboratories which indicated the possibility of the usefulness of the method, provided a modified procedure could be developed to correct some of the variables encountered in its use.

It was decided not to abandon the method and further experiments were carried on after making certain changes, particularly with regard to the manner in which the ash was applied to the platinum strip and the atmosphere supplied to the furnace. A small but definite amount of finely ground ash was thoroughly mixed with a definite quantity of liquid (preferably glycerol) and a small globule of this mixture was transferred to the platinum strip by means of a ball point. The glycerol was vaporized at a low temperature, leaving a uniform layer of ash in intimate contact with the platinum. Nitrogen, under a definite pressure, was supplied to the heating chamber. With these changes it was possible to obtain reproducible results within a reasonable tolerance. These results were not significant in terms of the ash-fusion temperatures by the A. S. T. M. method because the points of fusibility determined with the De Graaf apparatus did not coincide with the softening temperature by the gas-furnace method. Nevertheless, the altered method proved to be of great value in grading current shipments of coal as to the clinkering and slag-forming characteristics of the ash. Both the speed of making the tests and the reproducibility of the results contributed to its value for this purpose.

In making a large number of tests the observer, in addition to determining the initial and the final points, noted progressive changes in the condition of the ash at various temperatures between these points. These changes have different characteristics for different coals and they have considerable bearing on the behavior of the ash when the coals are burned

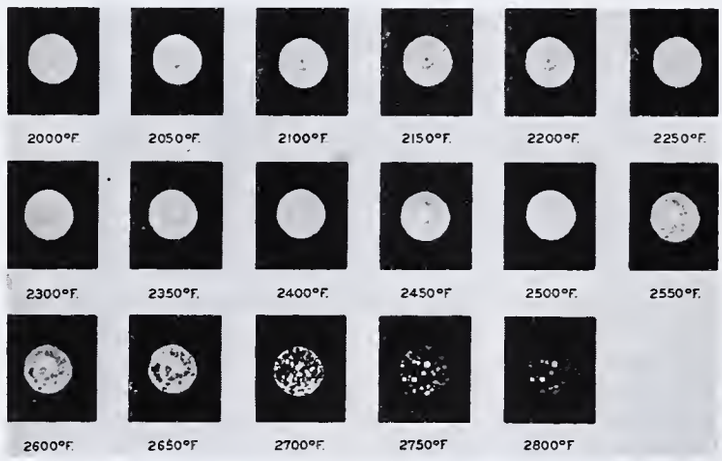

FIGURE 5

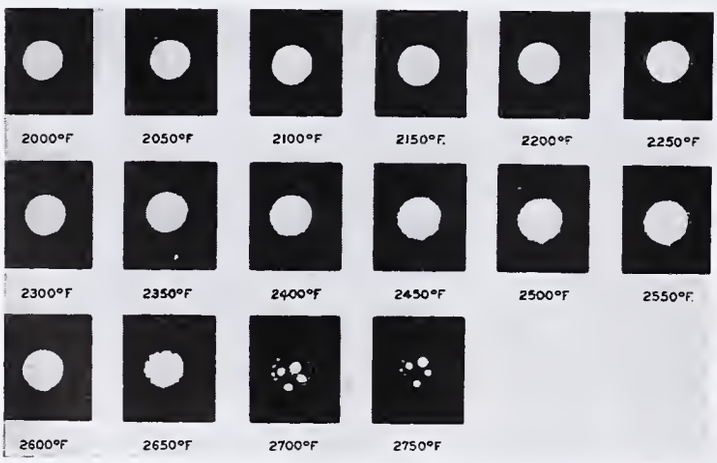

FIGURE 6

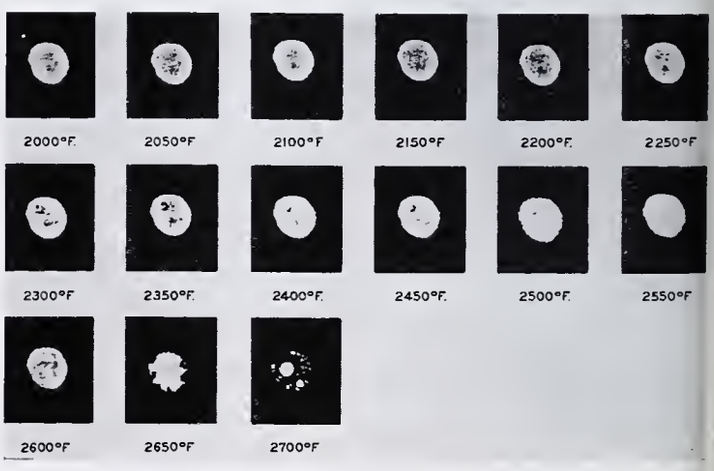

FIGURE 7

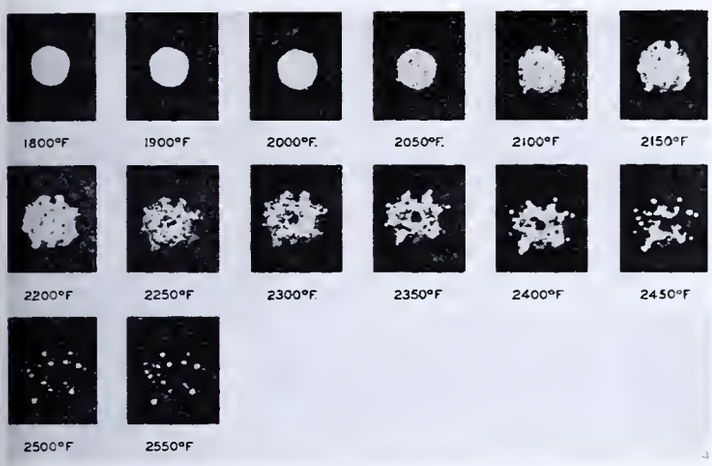

FIGURE 8

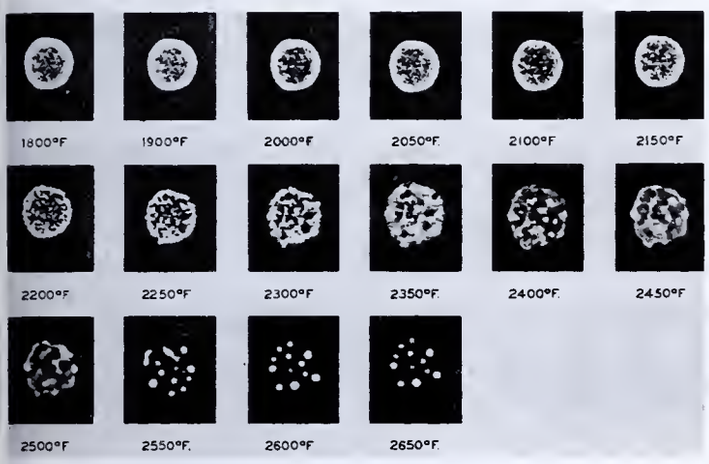

FIGURE 9

in various types of equipment. Unfortunately, only one observer could watch the progress of the change in the nature of the ash, and it was difficult for him to describe the appearance and extent of these changes throughout any particular temperature range. It was thought that a series of photographs of the progressive changes furnished more information concerning the fusing characteristics of ash and permitted a better understanding of the relation between clinker formation and fusibility than did the mere record of empirical points, such as the initial and the final points by the original De Graaf method or the initial deformation, the softening, and the fluid temperature by the gas-furnace method. Therefore the apparatus was remodeled so as to permit taking photographs of the ash sample on the platinum strip at various temperatures throughout the test.

Photographs taken by this procedure are presented to show the difference in behavior, within the fusibility range, of ash from various coals. Figures 5 to 10, inclusive, represent three kinds of coal with which the authors have had experience in regard to burning and clinker-forming characteristics. The photographs show two ashes from bituminous coals from the Appalachian Field (Figures 5 and 6), two semibituminous coals from the Appalachian Field (Figures 7 and 8), and two bituminous coals from the Eastern Interior Field (Figures 9 and 10). The photographs of these six coals illustrate the following points: that ashes from different coals do not exhibit the same progressive changes throughout the fusibility range, and that the interpretation of empirical points such as initial softening, softening, and fluid, by any method, is greatly supplemented by the information to be gained from a study of the photographs.

In the interpretation of the fusibility range from the photographs of the ash, the initial softening point has been defined

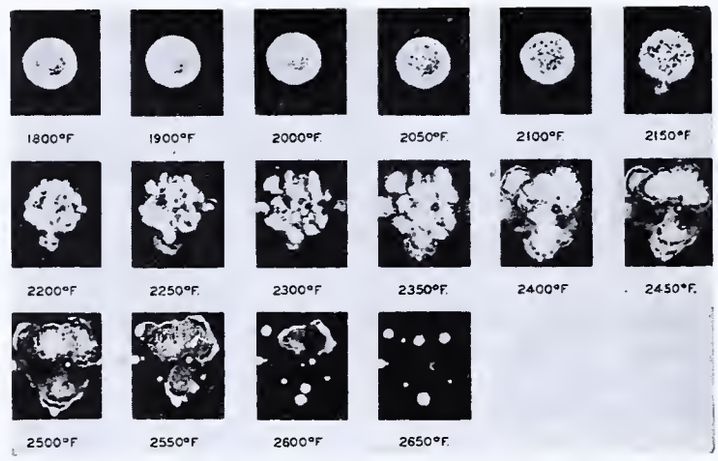

FIGURE 10

as the temperature at which there is the first visible indication of coalescence of the ash particles (see 2400° F., Figure 5) and the final point as the temperature at which the ash is formed into globules (see 2750° F., Figure 5).

The series of photographs of Figure 5 shows the fusing characteristics of the ash from a high-volatile, noncoking coal which has a fusibility range of 2400° to 2750° F. The gas-furnace softening temperature was 2725° F. This coal has been burned without the formation of clinker in a furnace equipped with a V-type overfeed stoker. Serious clinker trouble was experienced on this same equipment when burning coal mined from the same seam. The photographs of the ash from the troublesome coal (Figure 6) show different characteristics within its fusibility range of 2150° to 2700° F. The initial point was accompanied in this case by the formation of a ghostlike ring or halo encircling the main mass of the ash (see 2150° F.). The gas-furnace softening temperature was 2510° F.

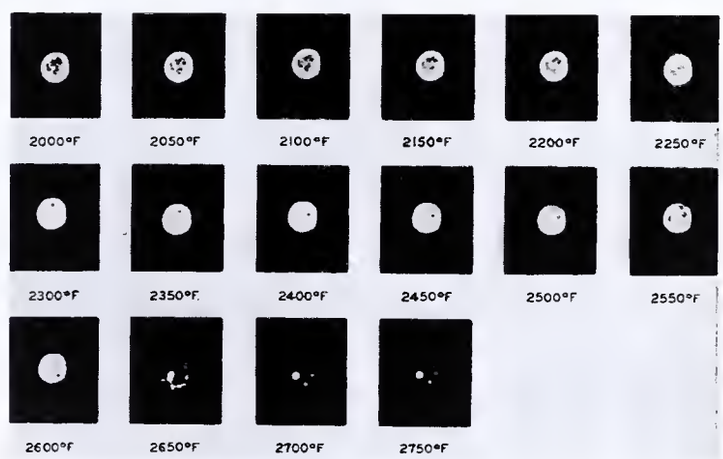

FIGURE 11

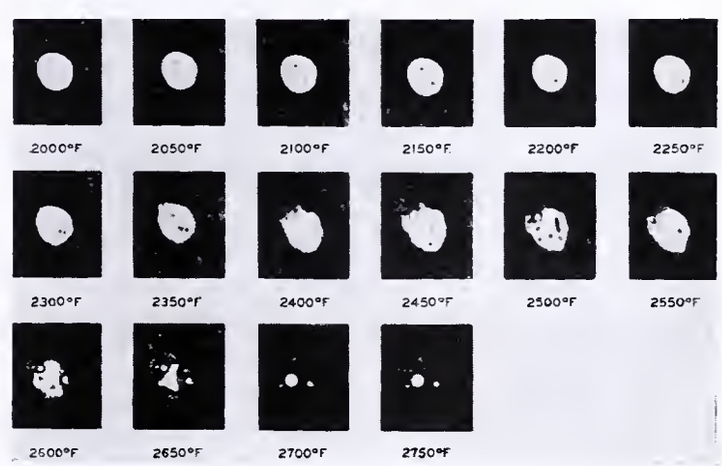

FIGURE 12

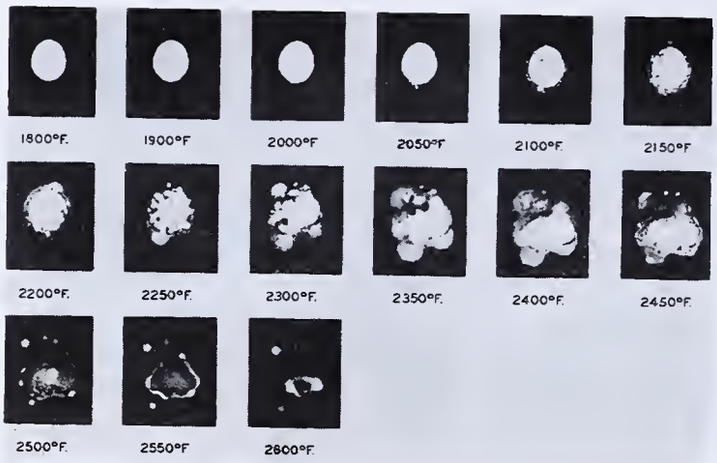

FIGURE 13

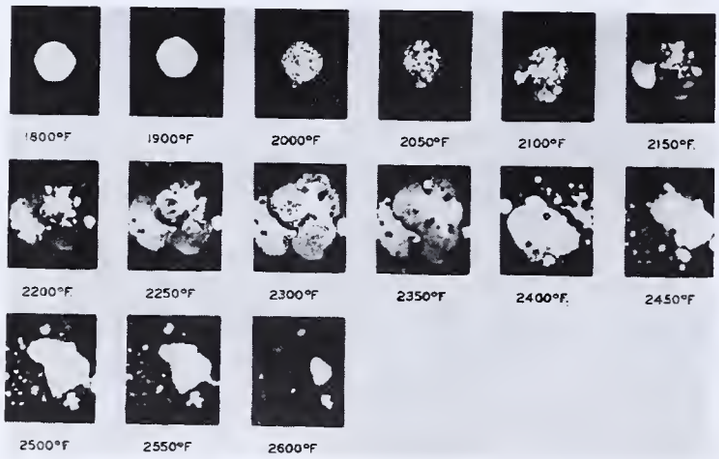

FIGURE 14

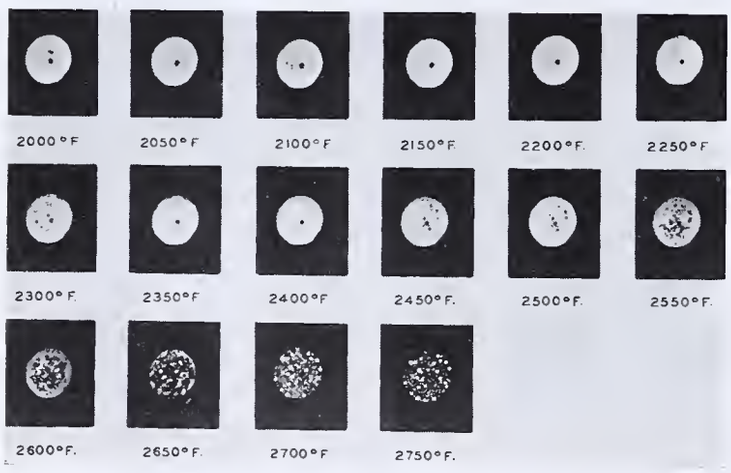

FIGURE 15

Figure 7 ash with a gas-furnace softening temperature of 2550° F. has a fusibility range of 2250° to 2700° F. This ash, which is a low-volatile coal, caused no clinkering on underfeed stokers.

Figure 8 ash with a fusibility range of 2000° to 2500° F. and a gas-furnace softening temperature of 2090° F., also a low-volatile coal but not from the same seam, did cause serious clinkering on the same equipment. The initial softening in this case is accompanied by an extrusion of softened matter from the body of the ash (see 2000° F.). It is apparent from the photographs that the clinkering coal ash of Figure 8 shows a pronounced general softening in the lower part of the fusibility range and that its fusion has progressed much farther at any given temperature within that range than has that of Figure 7 ash.

Figure 9 ash with a fusibility range of 2150° to 2550° F. and a gas-furnace softening temperature of 2185° F. formed clinkers on underfeed stokers. Figure 10 ash with a range of 2050° to 2650° F. and a gas-furnace softening temperature of 2040° F. is from a coal from the same field, but not the same seam as Figure

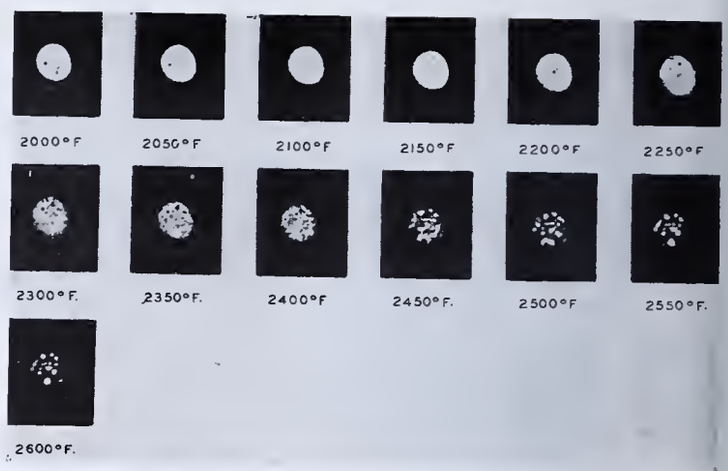

FIGURE 16

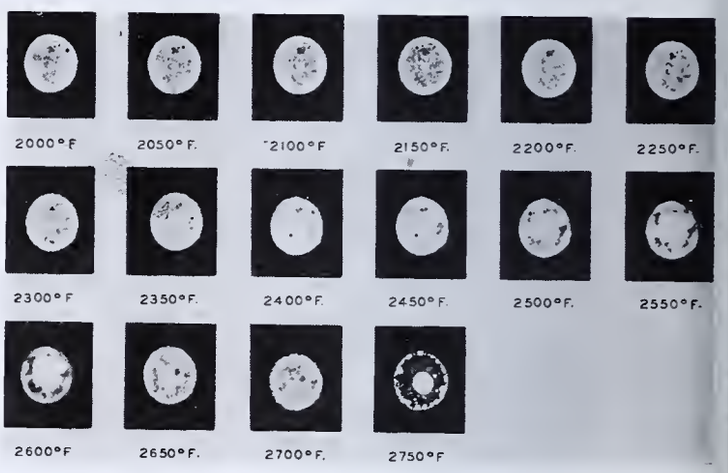

FIGURE 17

9 ash. Figure 10 ash clinkered readily when the coal was burned on underfeed stokers.

Some coal-ash samples of like A. S. T. M. gas-furnace softening temperatures evidence entirely different characteristics by the photographic method. Two pairs of photographic series illustrate this: Figures 11 and 12 (U. S. Bureau of Mines samples 11 and 14, respectively), and Figures 13 and 14 (Bureau of Mines samples 7 and 19, respectively).

Figure 11 ash with a gas-furnace softening temperature of 2195° F. shows a fusibility range of 2150° to 2650° F. plus in the photographs. This ash is the Bureau of Mines sample 11, to the unusual behavior of which attention has been called. It will be noted in Figure 2 that sample 11 cone appears to have reached its softening temperature at about 2150° F. and that it changes but little in appearance with increasing temperature up to about 2300° F. This ash exhibits the same characteristic when studied by the photographic method (see Figure 11). The initial point is reached at 2150° F.; a gradual change follows up to about 2500° F., and then a rapid change occurs up to the final point at 2650° F. plus.

Figure 12 ash with a gas-furnace softening temperature of 2200° F. and a fusibility range of 2150° to 2650° F. plus shows a tendency to spread out on the strip early in its fusibility range. These last two plates show ashes with essentially the same empirical points, but quite different in their fusibility progressions.

Figures 13 and 14 with gas-furnace softening temperatures of 2055° and 2040° F. and with like fusibility ranges from the photographs (2000° to 2600° F.) are the second series to illustrate that coal ash of like gas-furnace softening temperatures may exhibit different characteristics when studied by this photographic method.

From the empirical points, these coals might be expected to have like clinkering characteristics, but it is apparent from the photographs that their fusibility progressions are quite different. The ash of Figure 14 is similar to that of Figure 10 which formed troublesome clinker. The appearance of these plates suggests the formation of extremely free-flowing slag, a characteristic which is shown to a lesser degree in Figure 13.

Figures 15 and 16 show the fusing characteristics of ash from

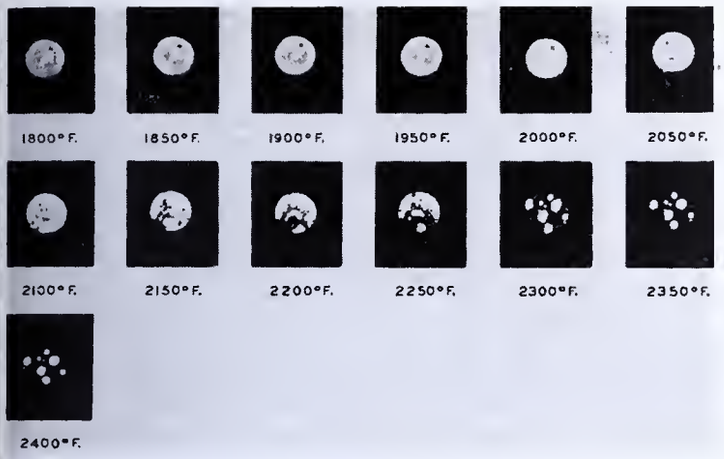

FIGURE 18

two low-volatile, semi-bituminous coals from the Appalachian Field. The coal in Figure 15 with an ash-fusibility range of 2250° to 2700° F. has been burned on underfeed stokers without the formation of objectionable clinkers. This ash exhibits only gradual changes in its condition up to 2500° F. and shows a rapid change above that temperature. The coal in Figure 16 with a fusibility range from 2200° to 2500° F. when burned on the same equipment produced troublesome clinkers. Ash from this coal shows more rapid progression of fusion than is shown by the ash of Figure 15.

The fusibility progression of ash from a high-volatile, coking, bituminous coal from the Appalachian Field is shown in Figure 17. It is difficult to select the fusibility range of this ash because it shows only slight changes at the lower temperatures. However, an abrupt change occurs between 2700° and 2750° F. The slow progression of the fusion in the case of this ash is significant in that the coal has been burned on a variety of equipment without the formation of troublesome clinkers.

Figure 18 shows the fusing characteristics of ash from lignite coal, indicating a fusibility range of 2000° to 2300° F. with distinct progression from the initial point to the final point. This coal cannot be burned on certain types of equipment, particularly underfeed stokers, without the formation of troublesome clinker, as might be expected from the low fusibility range and the low final point of 2300° F.

It is hoped that the information presented in this paper will stimulate further study of the fusibility of coal ash and its relation to clinker formation. The photographic method should be particularly useful because of the permanent records that are made and the comparatively short time that is required for each test. An extended study of the relation between ash fusibility and clinkering must necessarily involve a number of factors, such as chemical composition of the ash, effect of fluxing agents, viscosity and surface tension of the slag formed, size and association of particles, furnace temperature, surrounding atmosphere, and length of time the ash is subjected to temperature. It is possible that the method may be of value in studying the effect of addition of various materials to coal in order to alter the fusing characteristics of the ash.

Literature Cited

(1) Am. Soc. Testing Materials, *Proc.*, **33**, 354 (1933).
(2) Am. Soc. Testing Materials, *Standards*, **24**, 994 (1924).
(3) *Ibid.*, 33, Pt. II, 289 (1933).
(4) Appalachian Coals, Inc., *Combustion*, **7**, 36 (1935).
(5) Barkely, J. F., Bur. Mines, *Rept. Investigations* **2630** (August, 1924).
(6) Barrett, E. P., Am. Soc. Testing Materials, *Proc.*, **35**, Pt. II, 627 (1935).
(7) Eimer and Amend, New York, *Circ.* **402** (1929).
(8) Jones, Farmer, Brewer, and Porter, IND. ENG. CHEM., Anal. Ed., **2**, 325 (1930).
(9) Selvig, W. A., Bur. Mines, *Rept. Investigations* **3003** (June, 1930).

RECEIVED September 4, 1936. Presented before the Division of Gas and Fuel Chemistry at the 92nd Meeting of the American Chemical Society, Pittsburgh, Pa., September 7 to 11, 1936.

Separating Butenes from Butanes

Distillation of Azeotropic Mixtures with Sulfur Dioxide

M. P. MATUSZAK AND F. E. FREY, Phillips Petroleum Company, Bartlesville, Okla.

It has been found that four-carbon hydrocarbons form minimum-boiling azeotropic mixtures with sulfur dioxide. The order of the azeotropes with respect to boiling point is different from that of the hydrocarbons, for both butane azeotropes have lower boiling points than any of the butene azeotropes. This permits practical separation into a butene and a butane fraction. Vapor pressures and equilibrium compositions of both liquid and vapor phases at various temperatures have been determined for mixtures of sulfur dioxide and four-carbon refinery gas fractions.

PRACTICAL separation of mixtures of hydrocarbons having four carbon atoms to the molecule, such as certain gas fractions from modern cracking operations, into a butene part and a butane part by simple fractional distillation is very difficult because of the small boiling point range:

	° C.		° C.
Isobutane	−12.4	*n*-Butane	−0.6
Isobutene	− 6.7	2-Butene (trans)	1.0
1-Butene	− 6.7	2-Butene (cis)	3.7

Moreover, the order or arrangement of the hydrocarbons with respect to boiling point necessitates obtaining four fractions instead of only two.

Separation can be more readily accomplished by distillation in the presence of sulfur dioxide, which forms azeotropic mixtures with the following approximate boiling points at atmospheric pressure:

	° C.
Azeotrope of isobutane	−24
Azeotrope of *n*-butane	−18
Azeotrope of 1-butene	−16
Azeotrope of isobutene	−14
Azeotrope of 2-butene (trans)	−14
Azeotrope of 2-butene (cis)	−13

The order of the azeotropes with respect to boiling point differs from that of the hydrocarbons themselves, for both

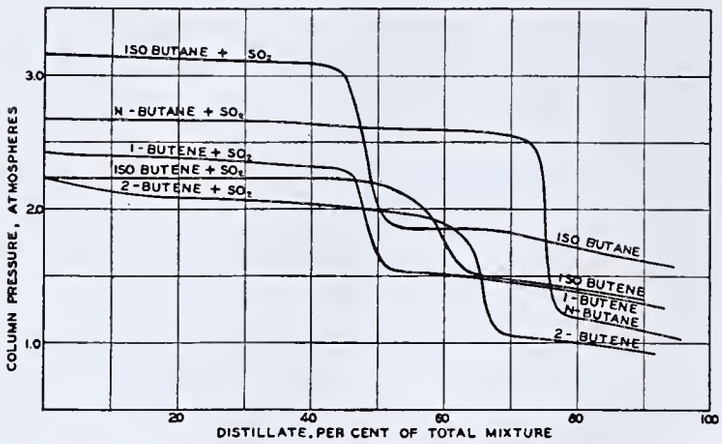

FIGURE 1. DISTILLATION CURVES FOR BINARY MIXTURES OF SULFUR DIOXIDE AND EXCESS FOUR-CARBON HYDROCARBONS AT 3° C.

butane azeotropes have lower boiling points than any butene azeotrope. This change is evident in Figure 1, which shows typical isothermal distillation curves obtained with binary mixtures containing excess hydrocarbon (except No. 27, which had an excess of sulfur dioxide) in a laboratory vacuum-jacketed (unsilvered) glass gas-analytical column. The reflux condenser was cooled with an ice-water mixture and the distillation was followed by reading the column pressure. Total gas volumes of only 1 to 2 liters were used. Whereas *n*-butane has a position between 1-butene and 2-butene, its azeotrope has one between isobutane and 1-butene.

TABLE I. BINARY AZEOTROPIC MIXTURES OF SULFUR DIOXIDE AND FOUR-CARBON HYDROCARBONS

Hydrocarbon	Distillation Number	Distillation Temp. ° C.	Distillation Pressure Atm.	Mole Per Cent Hydrocarbon	Mole Per Cent Sulfur dioxide
Isobutane	30	3	3.17	45.1	54.9
n-Butane	11	−35	0.46	40.5	59.5
	22	−18	0.99	39.3	60.7
	8	−18	0.99	38.9	61.1
	20	−19	0.99	39.7	60.3
	21	− 5	1.89	36.9	63.1
	10	− 5	1.89	36.6	63.4
	23	3	2.65	35.6	64.4
1-Butene	40	−16	0.99	41.7	58.3
	38	3	2.37	40.7	59.3
Isobutene	19	−30	0.46	46.0	54.0
	16	−14	0.99	44.2	55.8
	17	0	1.88	46.6	54.4
	18	0	1.88	46.4	53.6
	26	3	2.24	36	64
	27	3	2.40	37.5	62.5
2-Butene	14	−29	0.46	32.5	67.5
	12	−14	0.99	31.6	68.4
	2	..	0.99	30.3	69.7[a]
	5	−13	0.99	31.0	69.0[b]
	13	1	1.88	27.8	72.2
	24	3	2.05	27.7	72.3

[a] Absorption with potassium hydroxide gave 69.4 per cent.
[b] Absorption with potassium hydroxide gave 66.8 per cent.

If sulfur dioxide is added to a mixture of four-carbon hydrocarbons in an amount equivalent to the azeotropes of the butanes present and if the resulting mixture is then fractionally distilled, the butanes can be separated from the butenes, for there is a difference of over 11° C. between the boiling points of the highest boiling paraffin azeotrope and the lowest boiling of the olefins.

Composition of Azeotropes

Table I indicates the composition of the azeotropes when distilled in a laboratory gas-analytical column. The percentages have been calculated from the position of the breaks in the distillation curves and from the over-all composition. The temperature figures are approximate only, but are believed to be correct to about 1° C.

The sulfur dioxide content differs with the hydrocarbon concerned, being smallest for isobutane and largest for 2-butene. Also, in general, the hydrocarbon content decreases with increase in temperature of distillation, or with increase in distillation pressure.

Laboratory Separations

Table II and Figure 2 present data obtained by distilling two four-carbon refinery gas fractions in the presence of sulfur dioxide. In each case the total gas volume of the mixture was 2.0 liters. In distillation 35 the gas volume of hydrocarbons was 1.2 liters; in distillation 36, 0.8 liter. Successive small fractions, designated by letters of the alphabet, were removed and analyzed with an Orsat-type gas-analysis assembly. Sulfur dioxide was removed with potassium hydroxide, isobutene by several successive 1-cc. portions of 64 per cent sulfuric acid in a special pipet, and normal butenes by 1-cc. portions of 95 per cent sulfuric acid in an empirically determined procedure that gave accurate results. Precautions were observed to eliminate errors caused by solution of sulfur dioxide in moisture contained in the buret and connections, by desiccation of the sample by sulfuric acid, by incomplete absorption due to establishment of equilibrium, and by solubility of hydrocarbons in the absorption products.

The hydrocarbons in fraction A of distillation 35 consisted chiefly of isobutane; in B, of both butanes. The latter contained considerable butenes, owing to too rapid distilling. Still more butenes appeared in fraction C; in D, they predominated, revealing a depletion of the butanes. Since analyses continued to show the presence of paraffins in subsequent fractions and since their percentage increased at the end of the distillation, it is believed that some pentane was present in the original refinery gas fraction. The sulfur dioxide became practically exhausted in fraction E, causing a sudden drop in distillation pressure from 2.2 to 1.5 atmospheres.

In distillation 36, it had been planned to use an excess of sulfur dioxide; but its low content in the residual gas in the column and kettle (fraction K) indicates that scarcely enough was present. The sulfur dioxide content of the earlier or butane-rich fractions was practically constant at 62 to 65 per cent, which is comparable with 64.4 obtained for the azeotrope of *n*-butane in distillation 23 of Table I. For the butene-rich fraction J it increased to 71.8 per cent, which agrees with 72.3 found for the azeotrope of 2-butene in distillation 24 of Table I. With respect to the hydrocarbon content, the first several fractions contained mainly *n*-butane and the last two mainly butenes. The butane became exhausted with fraction I, causing the pressure to drop suddenly from 2.4 to 1.85 atmospheres. This fraction contained a mixture of butane and butenes, with the butane predominating. Fraction J contained practically no butane. The slight increase in paraffin content shown by the last fraction, K, is attributed to the presence of a trace of pentane.

The summary given in Figure 2 shows that in distillation 35 the first composite fraction, A-B, containing 31.4 per cent of all the hydrocarbons, contained 65.5 per cent of all the paraffins at an average concentration of 93.5 per cent and 3.7 per cent of all the butenes at an average concentration of 6.5 per cent. Al

TABLE II. LABORATORY SEPARATIONS OF FOUR-CARBON REFINERY GAS FRACTIONS

Distillation	Fraction	Distn. Time Min.	Mole Per Cent Distilled	Analysis, Mole Per Cent: Sulfur dioxide	Hydrocarbons, SO_2-Free: Iso-butene	n-Butenes	Paraffins
35	Original	..	..	..	23.0	35.5	41.5
	A	25	18.0	43.9	0.7	2.3	97.0
	B	15	39.1	51.2	0.9	8.9	90.2
	C	35	54.1	58.0	1.8	23.3	75.0
	D	65	64.0	55.0	23.7	56.5	19.9
	E	25	70.4	32.7	44.8	49.1	6.1
	F	43	87.9	0.7	45.0	50.1	5.0
	G	30	96.4	0.6	25.2	48.8	25.9
	H	..	100.1	0.9	21.0	48.8	30.1
36	Original	..	..	..	1.2	18.5	80.3
	A	15	9.5	62.6	0.2	1.2	98.5
	B	15	19.1	62.4	0.1	0.4	99.6
	C	11	29.8	63.0	0.0	0.3	99.6
	D	15	39.4	63.1	0.1	1.5	98.5
	E	16	48.4	62.5	0.0	0.6	99.4
	F	15	56.1	65.0	0.0	0.9	99.1
	G	23	65.8	62.7	0.2	1.7	98.1
	H	18	74.5	61.9	0.2	5.6	94.2
	I	15	82.5	64.4	3.4	36.4	60.3
	J	34	91.9	71.8	3.4	96.0	0.6
	K	..	99.8	59.4	2.4	93.3	4.3

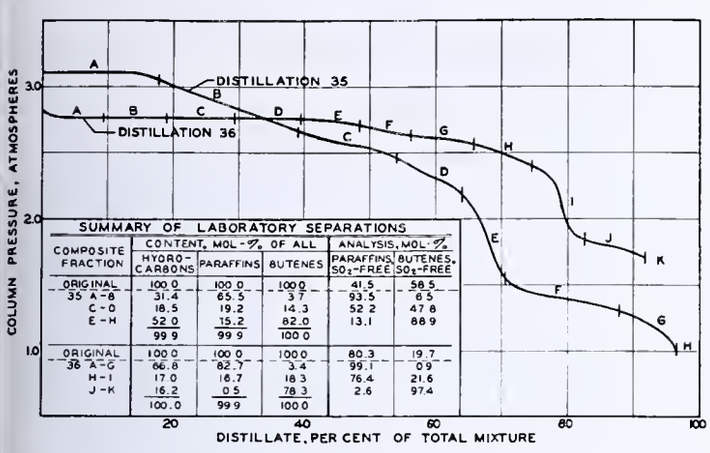

SUMMARY OF LABORATORY SEPARATIONS

COMPOSITE FRACTION	CONTENT, MOL-% OF ALL: HYDRO-CARBONS	PARAFFINS	BUTENES	ANALYSIS, MOL-%: PARAFFINS, SO_2-FREE	BUTENES, SO_2-FREE
ORIGINAL	100.0	100.0	100.0	41.5	58.5
35 A-B	31.4	65.5	3.7	93.5	6.5
C-D	18.5	19.2	14.3	52.2	47.8
E-H	52.0	15.2	82.0	13.1	86.9
	99.9	99.9	100.0		
ORIGINAL	100.0	100.0	100.0	80.3	19.7
36 A-G	66.8	82.7	3.4	99.1	0.9
H-I	17.0	16.7	18.3	76.4	21.6
J-K	16.2	0.5	78.3	2.6	97.4
	100.0	99.9	100.0		

FIGURE 2. DISTILLATION CURVES FOR MIXTURES OF SULFUR DIOXIDE AND FOUR-CARBON REFINERY GAS FRACTIONS AT 3° C.

concentration figures for the hydrocarbons are on a sulfur dioxide-free basis. The last composite fraction, E-H, containing 52.0 per cent of all the hydrocarbons, contained 15.2 per cent of all the paraffins at an average concentration of 13.1 per cent and 82.0 per cent of all the butenes at an average concentration of 86.9 per cent. If pentane had been absent from the original refinery gas fraction, the concentration of butenes would have been much higher than 86.9 per cent.

In distillation 36 the first composite fraction, A-G, containing 66.8 per cent of all the hydrocarbons, contained 82.7 per cent of all the paraffins at an average concentration of 99.1 per cent and 3.4 per cent of all the butenes at an average concentration of 0.9 per cent. The last composite fraction, J-K, containing 16.2 per cent of all the hydrocarbons, contained 0.5 per cent of all the paraffins—principally pentane—at an average concentration of 2.6 per cent and 78.3 per cent of all the butenes at an average concentration of 97.4 per cent. On a pentane-free basis and on the assumption that the average butane content was that found in fraction J, the concentration of butenes in this composite fraction was 99.4 per cent.

The data show an excellent separation. It is true that the intermediate composite fractions, C-D and H-I, contained both olefins and paraffins, at concentrations not greatly different from those present in the original material, but these fractions were small and passed overhead only when the butane was becoming exhausted. The data were obtained with small samples having total gas volumes of only 2.0 liters and with a laboratory gas-analytical column. It is clear that with larger samples and with more efficient distilling equipment the intermediate fractions would become relatively negligible or disappear entirely.

Vapor-Liquid Equilibria Data

A study was made of the equilibrium composition, at various temperatures, of both liquid and vapor phases of a number of complex mixtures of sulfur dioxide and four-carbon hydrocarbons. A 250-cc. steel bomb, always more than half filled with the liquid phase, was used. It was brought to a predetermined temperature in a water bath, with occasional vigorous shaking to ensure establishment of equilibrium conditions. Samples of both vapor and liquid phases—the latter after inverting the bomb—were removed by cracking open a needle valve fitted to the top of the bomb. These were run directly into the buret of an Orsat-type gas-analysis assembly and analyzed for sulfur dioxide, isobutene, and normal butenes. In order to have a volume of hydrocarbons of 75–95 cc., it was necessary to take a total sample of 100 to 300 cc., depending on the sulfur dioxide content.

The data are arranged in Table III in groups, designated by letters of the alphabet, in the order of increasing concentration of sulfur dioxide in the liquid phase. Within each group the determinations of the liquid phase are given first and then those of the vapor phase arranged in the order of increasing temperature.

Empirical Vapor-Liquid Relationships

A striking phenomenon indicated by group A of Table III is the pronounced difference in sulfur dioxide content of the two phases. As is shown by the vapor-to-liquid ratios in the eighth column, the vapor had well over twice as high a concentration as the liquid. The same phenomenon is exhibited, in successively decreasing degree, by groups *B*, *C*, *D*, *E*, and *F*. This is more clearly evident from Figure 3, which shows that the vapor-to-liquid ratio decreased in a uniform but nonlinear manner from a value of about 3 for a liquid-phase sulfur dioxide content of about 5 mole per cent to one of unity at 66 mole per cent. The value of 66 mole per cent doubtless represents approximately an average or over-all concentration of sulfur dioxide for all of the several possible azeotropic mixtures. Above 66 mole per cent, the vapor-to-liquid ratio continued to decrease, indicating that the concentration of sulfur dioxide in the vapor was less than in the liquid. In other words, as was to be expected for an azeotropic mixture of minimum boiling point, there was a strong tendency for the vapor phase to approach the sulfur dioxide content of the over-all azeotropic mixture both when too little and when too much was present in the liquid phase.

The significance and importance of this tendency becomes evident from inspection of the vapor-to-liquid ratios for butenes and butanes in the last two columns of Table III. Since both ratios were very close to unity in group A, scarcely any separation of butanes from butenes occurred when the sulfur dioxide content of the liquid was only about 11 mole per cent. (Since at the same time there was a marked concentration of the sulfur dioxide in the vapor phase, this fact indicates that a minimum-boiling azeotropic mixture does not consist of a single chemical compound or of definite aggregates of loosely bound molecules.) But in group B the ratios definitely diverged from unity, showing that appreciable separation took place when the sulfur dioxide content in the liquid was about 25 mole per cent, which was approximately the same concentration as in the vapor for group A. As the ratio for butenes was smaller than unity and that for butanes was larger than unity, the former tended to concentrate in the liquid phase and the latter in the vapor phase. Still greater divergence from unity was shown in group C, the liquid phase for which contained approximately the same concentration of sulfur dioxide as the vapor phase in group B, about 41 mole per cent. This increase in the effectiveness of the separation with increase in sulfur dioxide content is clearly indicated by all groups of Table III.

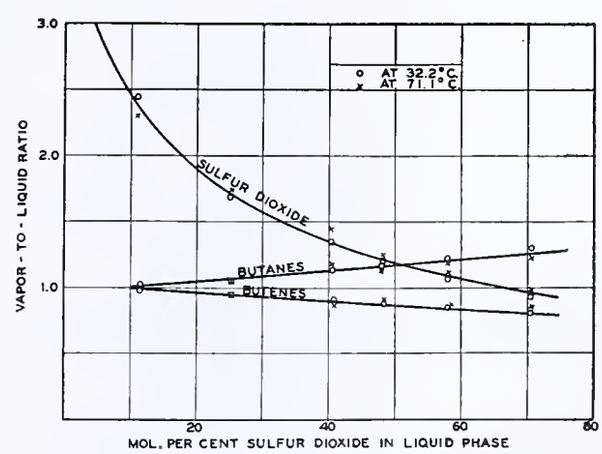

FIGURE 3. DEPENDENCE OF VAPOR-TO-LIQUID RATIOS ON SULFUR DIOXIDE CONTENT OF LIQUID PHASE

From Figure 3 it is evident that the relationships between sulfur dioxide content in the liquid phase and vapor-to-liquid ratios for butenes and butanes are virtually linear in the range covered. The two straight curves begin with a common value

Table III. Vapor-Liquid Equilibria Data for Mixtures of Sulfur Dioxide and Four-Carbon Hydrocarbons

			Composition, Mole Per Cent				Vapor Concn./Liquid Concn.[a]				
				Hydrocarbons, SO_2-Free							
No.	Phase	Temp., °C.	SO_2	Isobutene	Normal butenes	Butanes	SO_2	Isobutene	Normal butenes	All butenes	Butanes
A-47	L	35	11.6	21.8	36.6	41.6	...	...	...	...	...
50	L	67	10.9	22.5	36.5	41.0	...	...	...	...	...
	Mean		11.25	22.15	36.55	41.3	...	...	...	...	...
48	V	32.2	27.6	22.3	35.7	42.0	2.45	1.008	0.976	0.988	1.017
49	V	71.1	26.1	22.6	36.1	41.3	2.32	1.020	0.988	1.000	1.000
B-43	L	65	25.3	22.4	35.5	42.1	...	...	...	...	...
44	L	25	25.2	22.1	35.6	42.3	...	...	...	...	...
	Mean		25.25	22.25	35.55	42.2	...	...	...	...	...
46	V	0.0	41.7	20.2	33.9	45.9	1.61	0.909	0.954	0.937	1.088
45	V	32.2	42.5	21.0	34.3	44.7	1.69	0 945	0.965	0.957	1.060
41	V	71.1	43.7	21 2	34.2	44.6	1.74	0.954	0.962	0.959	1.058
42	V	97.5	47.1	20.9	34.4	44.7	1.87	0.940	0.968	0.957	1.060
C- 2	L	32.2	41.1	22.2	35.0	42.8	...	...	...	...	...
4	L	32.2	41.1	22.2	35.4	42.4	...	...	...	...	...
8	L	71	40.7	22.4	35.4	42.1	...	...	...	...	...
10	L	85	40.4	22.4	35.5	42.1	...	...	...	...	...
12	L	7	...	23.0	35.9	41.0	...	...	...	...	...
13	L	23.4	39.3	22.5	35.5	42.0	...	...	...	...	...
	Mean		40.5	22.45	35.45	42.1	...	...	...	...	...
11	V	5.3	52.5	18.9	32.7	48.4	1.297	0.842	0.922	0.892	1.148
1	V	32.2	55.4	18.8	32.8	48.4	1.368	0.837	0.925	0.892	1.148
3	V	32.2	54.5	19.1	32.9	48.0	1.346	0.851	0.928	0.899	1.140
6	V	53.0	57.3	18.0	31.9	50.2	1.415	0.802	0.900	0.860	1.190
5	V	71.1	58.0	18.7	32.5	48.8	1.432	0.833	0.917	0.885	1.159
7	V	71.1	59.5	18.4	32.1	49.5	1.470	0.819	0.906	0.873	1.175
9	V	84.8	59.8	18.8	32.3	48.9	1.477	0.837	0.911	0.883	1.160
D-16	L	32.2	48.1	22.5	35.5	42.0	...	...	...	...	...
18	L	73	48.3	22.8	35.2	42.0	...	...	...	...	...
	Mean	..	48.2	22.65	35.35	42.0	...	...	...	...	...
14	V	1.8	55.2	17.0	31.4	51.6	1.146	0.751	0.888	0.834	1.230
19	V	7.0	54.1	18.5	32.6	48.9	1.121	0.817	0.922	0.881	1.164
15	V	32.2	57.1	18.7	32.5	48.8	1.185	0.826	0.919	0.883	1.161
17	V	73.2	60.3	19.2	32.9	47.9	1.250	0.848	0.930	0.899	1.140
E-22	L	24	58.0	22.9	35.2	41.9	...	...	...	...	...
27	V	0.0	57.9	16.1	30.8	53.1	0.998	0.703	0.875	0.807	1.269
20	V	0.7	58.2	14.9	30.0	55.1	1.002	0.651	0.853	0.790	1.315
21	V	1.3	58.2	16.2	31.1	52.7	1.002	0.708	0.883	0.814	1.259
24	V	30.0	61.2	17.6	31.8	50.6	1.056	0.769	0.903	0.850	1.210
23	V	32.2	61.5	17.2	31.7	51.1	1.060	0.751	0.900	0.842	1.220
25	V	71.0	64.6	17.6	31.9	50.5	1.114	0.769	0.906	0.852	1.206
26	V	72.0	64.7	17.6	32.0	50.4	1.116	0.769	0.909	0.854	1.201
F-29	L	0.0	70.9	23.4	36.3	40.3	...	...	...	...	...
32	L	64	70.2	22.5	35.7	41.8	...	...	...	...	...
	Mean	..	70.55	22.95	36.0	41.05	...	...	...	...	...
28	V	30.0	61.9	14.5	29.2	56.3	0.877	0.632	0.811	0.742	1.370
30	V	32.2	65.7	16.2	30.8	53.0	0.931	0.706	0.855	0.798	1.290
31	V	71.0	69.1	17.5	31.8	50.7	0.980	0.763	0.883	0.836	1.234
G-34	L	31	78.1	31.4	41.0	27.6	...	...	...	...	...
37	L	22.7	78.3	31.5	41.1	27.4	...	...	...	...	...
	Mean		78.2	31.45	41.05	27.5	...	...	...	...	...
33	V	33.8	70.0	24.0	37.2	38.8	0.895	0.763	0.906	0.844	1.411
35	V	74.0	73.6	25.5	37.9	36.6	0.941	0.811	0.923	0.875	1.331
36	V	90.0	75.0	26.7	38.8	34.5	0.959	0.849	0.945	0.904	1.254
H-52	L	0.0	23.0	0.6	20.0	79.4	...	...	...	...	...
56	L	86	24.2	0.5	20.0	79.5	...	...	...	...	...
	Mean	..	23.6	0.55	20.0	79.45	...	...	...	...	...
51	V	0.0	49.8	0.4	17.6	82.0	2.11	0.7	0.880	0.875	1.032
53	V	32.3	49.0	0.5	17.8	81.7	2.08	0.9	0.890	0.890	1.029
54	V	71.1	46.7	0.5	18.4	81.1	1.98	0.9	0.920	0.920	1.021
55	V	87.0	47.4	0.5	18.5	81.0	2.01	0.9	0.925	0.925	1.020
I-58	L	0.0	46.4	0.5	20.3	79.2	...	...	...	...	...
61	L	66	48.2	0.5	19.8	79.7	...	...	...	...	...
	Mean	..	47.4	0.5	20.05	79.45	...	...	...	...	...
57	V	0.0	58.1	0.3	15.9	83.9	1.228	0.6	0.793	0.783	1.056
59	V	32.2	61.0	0.4	16.0	83.6	1.289	0.8	0.798	0.798	1.052
60	V	73.0	63.2	0.4	16.3	83.3	1.334	0.8	0.813	0.812	1.048
J-63	L	0.0	56.2	0.5	21.3	78.2	...	...	...	...	...
67	L	65	57.6	0.4	19.9	79.7	...	...	...	...	...
	Mean	..	56.9	0.45	20.6	78.95	...	...	...	...	...
62	V	0.0	60.7	0.3	14.3	85.4	1.068	0.7	0.694	0.694	1.081
64	V	32.2	63.9	0.3	15.3	84.4	1.122	0.7	0.743	0.742	1.070
65	V	71.1	65.8	0.3	16.3	83.5	1.157	0.7	0.791	0.784	1.058
66	V	86.0	68.2	0.3	14.9	84.8	1.199	0.7	0.724	0.723	1.074
68	V	99.3	68.5	0.4	15.4	84.2	1.204	0.9	0.748	0.751	1.068
K-70	L	0.0	71.2	0.4	21.0	78.6	...	...	...	...	...
74	L	25	70.6	0.5	20.9	78.5	...	...	...	...	...
	Mean	..	70.9	0.45	20.95	78.55	...	...	...	...	...
69	V	0.0	64.9	0.2	12.4	87.4	0.916	0.4	0.592	0.588	1.112
71	V	32.2	68.0	0.3	14.0	85.7	0.960	0.7	0.668	0.667	1.091
72	V	71.1	71.1	0.4	14.7	84.9	1.003	0.9	0.702	0.705	1.080
73	V	99.4	72.7	0.3	15.1	84.6	1.026	0.7	0.720	0.719	1.078

[a] The vapor-to-liquid ratios for hydrocarbons given in the last four columns were calculated from the sulfur dioxide-free mole percentages of columns 5, 6, and 7. They therefore do not represent ratios of the mole fraction in the vapor phase to the mole fraction in the liquid phase, since they ignore the presence of sulfur dioxide. The method of calculation used appears to be justified because it brings out sharply the effect of the sulfur dioxide on the separation of butanes from butenes.

of unity at about 10 mole per cent of sulfur dioxide—that is, detectable separation of butanes from butenes occurs only if the concentration of sulfur dioxide in the liquid phase exceeds about 10 mole per cent. The linear relationship continues even when the content exceeds that of the over-all azeotropic mixture—that is, the tendency for butenes to remain in the liquid phase and for butanes to pass into the vapor phase becomes greater the higher the concentration of sulfur dioxide.

The empirical relationships just discussed elucidate the action taking place in a fractionating column. Three cases are possible—namely, those in which the over-all concentration of sulfur dioxide is less than, equal to, or greater than that required to form azeotropic mixtures with all of the hydrocarbons present.

The first case would yield a kettle product containing little or no sulfur dioxide if the amount used is equivalent to the

azeotropes of the butanes present. The feed would thus have a relatively low proportion of sulfur dioxide. At first, perhaps no preferential removal of the butanes would take place. But the sulfur dioxide would soon become concentrated in the uppermost part of the column to a point at which appreciable separation would occur. In each successively higher plate the content of sulfur dioxide would tend to approach that required for the azeotropes of the butanes. Simultaneously, the effectiveness of each plate would approach a maximum which would be reached when the sulfur dioxide content of both phases became identical. Depletion of sulfur dioxide by the first few plates before complete removal of butanes would be avoided by introducing the sulfur dioxide at a feed plate considerably below that for the hydrocarbon mixture.

In the second case, since all plates would have approximately the same concentration of sulfur dioxide, neglecting the fact that the azeotropes of the different hydrocarbons contain different amounts of sulfur dioxide, all would be of approximately equal effectiveness. The fractionating tower could operate with a smaller number of plates than that necessary for the preceding case. Also, there would not be the same necessity for introducing the hydrocarbons and the sulfur dioxide at different feed plates.

In the third case, an excess of sulfur dioxide is used. Since from Table III and Figure 3 the effectiveness of a plate increases linearly with the sulfur dioxide content of the liquid phase even when the concentration exceeds that required to form the azeotropic mixtures, the fractionating tower would not need to have as many plates as in the first two cases.

From the vapor-to-liquid ratios in the ninth and tenth columns of Table III, it is evident that there was a better separation of butane from isobutene than from normal butenes. It is believed that the normal butenes in this case consisted principally of 1-butene, whose azeotrope has a higher vapor pressure than the azeotrope of isobutene.

Although the foregoing has been written with reference to the data of groups A to F of Table III, which were obtained with one four-carbon liquefied-gas fraction, the principles discussed appear to be of general application. The data of groups H to K, obtained with a different liquefied gas fraction containing much more *n*-butane, no isobutane, and much less isobutene, are very similar to those of groups A to F and, if plotted, give curves similar to those of Figure 3. The concentrating of sulfur dioxide in the vapor phase was more rapid for this fraction than for the first, probably because of the absence of isobutane, whose azeotrope contains less sulfur dioxide than the azeotrope of *n*-butane. Also, the vapor-to-liquid ratio for the *n*-butane present was uniformly smaller than for the mixture of butanes, for the azeotrope of *n*-butane has a lower vapor pressure than that of isobutane. The data of group G, obtained with a mixture relatively poor in butane, are also similar to those already discussed.

Temperature and Pressure

The data of Table III indicate two effects attributable to temperature. First, with one or two exceptions, within any one group of data, the mole percentage of sulfur dioxide in the vapor phase increased in a practically linear manner with the temperature. This is in harmony with the experimental fact that the azeotropes decrease in hydrocarbon content with increase in temperature. Second, with a few exceptions, the ratios for the hydrocarbons became somewhat less favorable to separation as temperature increased.

From the absolute pressure measurements presented in Table IV, it appears that at still-head temperatures ranging from 50° to 75° C. the pressure in a fractional distillation column used for separating butanes from butenes in the presence of sulfur dioxide would range from about 9 to 18 atmospheres. To this range the phase composition data of Table III are applicable.

Table IV. Vapor Pressure Data for Mixtures of Sulfur Dioxide and Four-Carbon Refinery Gas Fractions

Absolute Pressure of Mixture Left from:							
G-37		B-46		I-61		K-72	
° C.	Atm.	° C.	Atm.	° C.	Atm.	° C.	Atm.
51	9.8	39.0	6.3	48.0	9.0	33.5	6.3
53.0	10.5	50.0	8.4	51	9.8	41	7.7
56.5	11.1	53.5	9.0	53	10.5	47	9.0
59	11.8	61.2	11.1	58.7	11.7	52	10.5
62.5	12.9	64.2	11.8	60.8	12.5	56.8	11.8
66	13.6	69.5	13.3	63.0	13.3	61.0	13.3
66	13.9	71.0	13.9	65	13.9	65	14.6
67.2	14.6	74.1	14.6	67	14.6	69	16.0
69	15.3	79.0	16.0	69.5	15.3	73	17.4
72	16.0	80.2	16.7	71	16.0	76.2	18.8
73	16.7	81.2	17.4	73	16.7	79.3	20.2
75	17.4	..	..	75	17.4	83.0	21.6
80	19.5	..	..	..	..	85	22.9
81.7	20.2	..	..	..	..	89	24.4
83.8	20.9	..	..	..	..	92	25.7
85.0	21.6	..	..	..	..	94	27.2
88.0	22.9	..	..	..	..	97.7	28.5
						98.5	29.2

Since data on the thermodynamic properties of sulfur dioxide–hydrocarbon mixtures are far from complete, a thermodynamic analysis has not been attempted. Intermolecular cohesive forces in the liquid state between sulfur dioxide molecules and between hydrocarbon molecules can be considered to be greater than those existing between molecules of sulfur dioxide and hydrocarbon, and this accounts for a boiling point of the mixture lower than that of either component. That simple paraffins and olefins in admixture exhibit partial vapor pressures closely proportional to their molar concentration and vapor pressures has been well established. The data presented show a boiling point depression on mixing butanes with sulfur dioxide markedly greater than in the case of butene–sulfur dioxide mixtures, after making due allowance for boiling point differences, and this difference parallels the familiar difference in mutual solubility. Thus *n*-butane and sulfur dioxide will separate into two liquid phases at −5° C. and below (*1*), while isobutene and sulfur dioxide remain in a single phase down to the freezing point of sulfur dioxide (−73° C).

Literature Cited

(1) Seyer and Todd, Ind. Eng. Chem., 23, 325–7 (1931).

Received October 24, 1936. Presented before the Division of Petroleum Chemistry at the 92nd Meeting of the American Chemical Society, Pittsburgh, Pa., September 7 to 11, 1936.

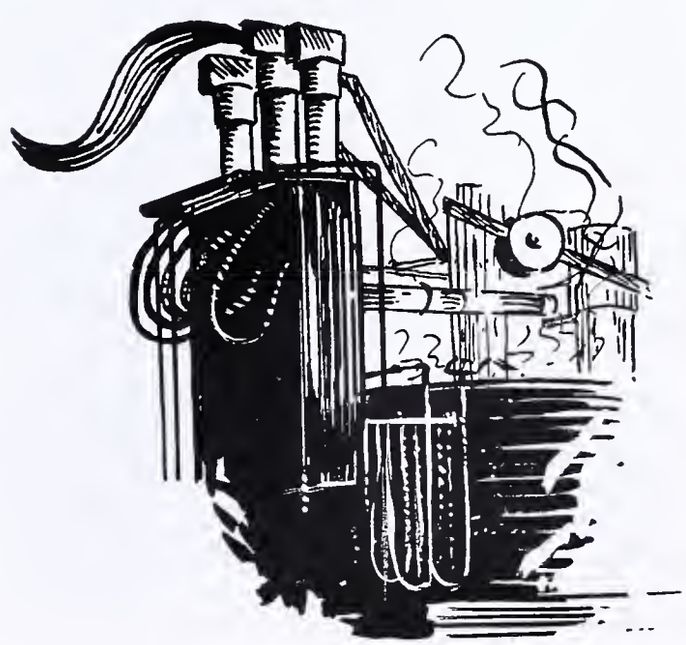

The Analysis of Sodium Acetate

CHARLES B. HURD AND WILLIAM FIEDLER, JR.[1]
Department of Chemistry, Union College, Schenectady, N. Y.

IN A RECENT study in this laboratory of certain phenomena occurring during the setting of gels of hydrated silica (*1, 2*), the authors found it necessary to make numerous analyses of sodium acetate, particularly in solution. The method ordinarily recommended for the determination of this substance involves ignition to the carbonate, which may be followed by a titration of the carbonate with standard dilute hydrochloric acid (*3, 5*).

Very little information could be found concerning the accuracy of this determination. Unfortunately the salt sodium acetate, which crystallizes with three molecules of crystal water, is efflorescent; hence no dependence may be placed upon it as a standard.

A study of the literature yielded only two methods of analysis which appeared worth serious investigation. The first was the pyrolytic method mentioned above. The second consisted of the distillation of the acetic acid from the sodium acetate solution, to which a nonvolatile acid such as phosphoric acid had been added (*4*). The acetic acid was caught in standard alkali. The following account will illustrate the procedures and one typical set of results.

Standard Acetic Acid Solution

An approximately normal solution was prepared from reagent-grade glacial acetic acid and recently boiled distilled water, and was standardized against an approximately normal standard sodium hydroxide solution which contained enough barium hydroxide to remain free from carbonate. This was kept in a Squibb automatic buret assembly, protected by fresh tubes of soda-lime. This base had been standardized against a standard 0.75 *N* hydrochloric acid, prepared by dilution of constant-boiling acid and standardized against sodium carbonate.

This particular acetic acid was titrated with the standard sodium hydroxide, using phenolphthalein. Values of 0.967 *N* and 0.968 *N* were obtained.

DISTILLATION METHOD. A solution of sodium acetate was prepared by neutralizing 50 cc. of the 0.968 *N* acetic acid with sodium hydroxide. To this solution, in a Kjeldahl flask, were added 15 cc. of 60 per cent reagent orthophosphoric acid. The connection from the Kjeldahl flask to the condenser was made by means of a 25-cc. pipet, with the bulb vertical and the stem bent to go into the condenser. Through the other hole of the two-hole rubber stopper in the Kjeldahl flask was inserted the stem of a separatory funnel, through which distilled water was added from time to time. The acetic acid was caught in 50 cc. of the standard alkali in a 2-liter Florence flask after a very slow distillation, requiring 10 hours. The authors found erratic results if other than a very slow distillation were used. To remove carbon dioxide from the solution, 50 cc. of 1.088 *N* sulfuric acid were added, the total volume being about 1300 cc. This was refluxed for about a half hour. The excess acid was then determined by titration with the standard base. The concentration of the original 50 cc. of acetic acid was found to be 0.967 *N*, compared to 0.968 *N*. These results can be easily duplicated.

The slow distillation appears to be essential; otherwise the results come out much too high. Also, it is apparently necessary to keep at least 200 cc. of solution in the distilling flask at all times during distillation with phosphoric acid; distilled water must be added to the contents of the flask from time to time. The authors have found phosphoric acid preferable to sulfuric acid.

By this method, a solution of reagent-grade sodium acetate from a freshly opened bottle, prepared by weight to be exactly 1 *N*, was found to be 0.995 *N*. The method, while reliable, is very time-consuming.

It would have been interesting, from the point of view of the method, to study carefully the high results obtained when the distillation was not carried out slowly. Since, however, the authors were trying to develop a satisfactory method of analysis to assist in carrying out a long-delayed study of the setting of the silicic acid gels they avoided rather than studied these deviations. Results nearly 1 per cent high were obtained with rapid distillation. The trouble was caused by phosphoric acid carried over, apparently as spray. It is the authors' opinion that a more suitable trap could be devised, which would permit much more rapid distillation. This method was of use in determining the acetate in the presence of silicate, where the pyrolytic method was not suitable.

PYROLYTIC METHOD. The same solution of sodium acetate prepared from reagent sodium acetate was analyzed by this method. Exactly 10 cc. of the solution were measured into a weighed platinum crucible, using a specially calibrated 10-cc. buret. The solution was evaporated on a steam bath, heated in an air bath, and finally heated carefully over a burner at dull redness until all carbon particles had disappeared. The residue, weighed as pure anhydrous sodium carbonate, gave 0.997 *N* for the sodium acetate solution, as compared to 0.995 *N* by the distillation method.

The authors have found it desirable not to heat the materials above low redness, although the removal of the carbon particles requires a little more time.

The literature suggests that the sodium carbonate formed be titrated with standard hydrochloric acid; the authors have found practically the same results, whether weighed as sodium carbonate or titrated. The statement is made in the literature that sodium carbonate undergoes slight decomposition if heated much above 300° C., and the temperature recommended in textbooks on quantitative analysis for heating sodium carbonate to prepare a primary standard is 270° to 300° C. During the pyrolysis, the material is carried for some time considerably over 300° C. and the titration method might be considered preferable.

The authors were unable to determine differences in the two procedures greater than their experimental error and have preferred to weigh the carbonate because it proved easier and more rapid.

PRECISION AND ACCURACY. After making a number of determinations by both methods, the authors are satisfied that each yields satisfactory results when carried out as described. The pyrolytic method is much more rapid and will be preferred.

The statement will be found that the distillation method gives low results. In the authors' experience, using the slow distillation described, duplicate determinations have agreed within 2 parts in 1000. About 1 part in 1000 lower than the pyrolytic method appears to be the average.

LIMITATIONS. Since the authors have been interested in the determination of sodium acetate only in solutions containing sodium acetate alone or sodium acetate and sodium silicate, they are prepared to say little about the limitations of the methods. While for them both methods have given satisfactory results on the solutions of sodium acetate

[1] Present address, American Cyanamid Corp., Pittsburgh, Pa.

alone, only the distillation method is suitable where the solution contains both sodium acetate and silicate.

Literature Cited

(1) Hurd, C. B., Fiedler, W., Jr., and Raymond, C. L., *J. Phys. Chem.*, in press.
(2) Hurd, C. B., Raymond, C. L., and Miller, P. S., *Ibid.*, 38, 663 (1934).
(3) Scott, W. W., "Standard Methods of Chemical Analysis," p. 530, New York, D. Van Nostrand Co., 1917.
(4) Sherman, H. C., "Methods of Organic Analysis," 2nd ed., p. 130, New York, Macmillan Co., 1917.
(5) Zemlyanitzuin, V. P., *J. Chem. Ind.* (*Moscow*), 8, 629 (1931).

RECEIVED August 28, 1936.

Physical Testing Procedure for Latex Stocks

L. A. WOHLER
Research Laboratory, The Firestone Tire & Rubber Co., Akron, Ohio

ALTHOUGH procedures for the preparation of physical testing slabs from milled rubber stocks have been standardized, no such specifications are available for latex stocks. Test slabs from latex require special treatment and, if certain conditions are not fulfilled, erratic results will be obtained. The term "physical testing" as used here means the elongation modulus and tensile readings usually determined on the Scott testing machine. The procedure herein described is not set up as a complete specification, but it does give a method by which accurate and reproducible results have been obtained in this laboratory. It further calls attention to the fact that a latex stock containing more or less standard compounding ingredients (of which some are water-soluble) may be greatly altered in its physical properties by a variation in the humidity conditions under which it is being tested. All tests in this investigation were made on pure gum stocks, which experience has shown to give the most erratic results. While it is true that test strips made from factory-produced articles may give sufficient information for factory control, it is also considered essential to have available a test method for use in obtaining basic information on accelerator-sulfur ratios and general compounding ingredients.

Two methods have been proposed in the literature. One (*2*) recommends drying the latex test film on a glass plate placed in an oven at 45° C. The other (*3*) recommends drying the test films on unglazed tile, the edges of which have been built up with strips of paraffined paper to form a tray for drying the latex mix. In this investigation the glass-plate method was adopted in preference to the porous-tile method, in order to eliminate any loss of water-soluble substances originally contained in the latex or added during compounding.

In making a latex mix to be used in forming a test slab, three conditions must be considered—namely, proper viscosity of the mix, uniform fine dispersion of the pigments, and a perfectly smooth surface on the dried slab. The viscosity of the mix must be high enough to prevent settling of the pigments during drying, yet low enough to allow all air bubbles trapped during mixing to rise to the surface in a reasonable length of time before the slabs are poured. The dried surfaces of the slabs must be entirely free from ridges, cracks, or other blemishes.

All compounding ingredients used were made up in the form of water dispersions or solutions before being added to the latex. The zinc oxide and sulfur dispersions were of 40 and 50 per cent concentrations, respectively, and were prepared in a ball mill in which they were ground for 48 hours. The zinc oxide was dispersed in a 2 per cent Saprotin solution and the sulfur was dispersed in a 10 per cent glue solution. The basic test formula was of 50 per cent total solids content as follows:

	Grams
60% centrifuged latex	166
40% zinc oxide dispersion	2.5
50% sulfur	3
Piperidine pentamethylene dithiocarbamate (Pip-Pip)	0.75
10% ammoniacal casein	10
Water	26.25

The test mix was prepared by adding first the casein and then the pigments to the latex. The mix was stirred for 10 minutes at 350 r. p. m. with a single-blade mechanical stirrer and then strained through fine jersey knit rayon cloth. The strained mix was placed in a special buret and allowed to stand for 0.5 hour before the slabs were poured. During this time the air bubbles rose to the surface.

The above-mentioned burets were constructed from 71-cm. (28-inch) lengths of 29-mm. (1.125-inch) glass tubing, graduated into 25-cc. divisions and fitted at the bottom with stopper, tube, and screw clamp. The slabs were formed and dried in plate-glass trays having inside dimensions of 175 × 175 × 6 mm. (6.875 × 6.875 × 0.25 inch). These trays were constructed by cementing, with sodium silicate solution, 13-mm. (0.5-inch) wide strips of 6-mm. (0.25-inch) plate glass about the perimeter of 187-mm. (7.375-inch) squares of the same material.

The mix was flowed into these trays by placing the buret tube close to the bottom of the tray and allowing the compounded latex to flow slowly into the cavity. The amount of the mix used was determined by the total solids content of the compound and the desired thickness of the dried slab. With the above mix 75 cc. produced a dried slab of 1.27-mm. (0.050-inch) thickness. This was the thickness of all slabs tested in this experimental work. The filled glass trays were placed upon a level surface and allowed to dry overnight at room temperature. The slabs were then removed from the trays and after 48 hours' further drying were cured by hanging individually in an oven at 100° C. If any moisture remained in the slabs after this drying period, it was removed during the air cure which followed. It was found that even with substantial amounts of water remaining in the slab before cure, there was little effect on the physical properties at the optimum cure, provided other conditions to be discussed later were fulfilled.

After the cure, test strips were cut out with a standard A. S. T. M. die 11.1 cm. (4.375 inches) long with a 2.5-cm. (1-inch) construction and tested on the Scott machine.

Experimental

When the first slabs were prepared using the given formula, the upper surface of the dried slabs was found to be covered with a network of fine surface cracks which would invalidate any physical tests made with them. By process of elimination the zinc oxide was found to be the pigment causing the cracked surface. However, when 1 per cent of Aquarex D, on the weight of rubber, was added as additional stabilizer, a slab was formed which when dry had a smooth and flawless surface. Examples of the two types of surfaces are shown in Figure 1.

Several tests using the procedure outlined above for the preparation of a satisfactory slab were made to determine whether reproducible results could be obtained, but it was found that large variations occurred when the test was re-

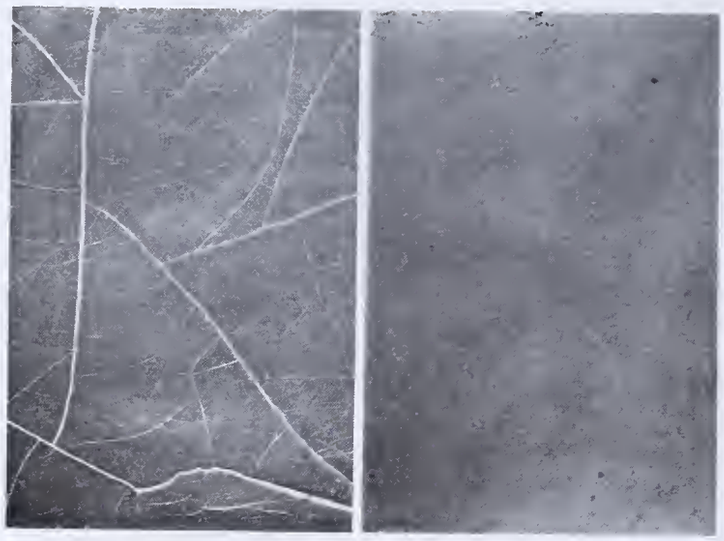

FIGURE 1. TWO TYPES OF SLAB SURFACES

peated over several days. The results of a series of this kind are shown in Table I. The slabs for this series were prepared from separate mixes on successive days using identical compounding ingredients. These slabs were also given identical drying and curing treatments. The tensile strength varied up to 25 per cent and the modulus at 600 per cent elongation varied 50 per cent.

TABLE I. RESULTS WITH TEST SLABS

Test	Elongation	Modulus at 600 Per Cent		Tensile	
	%	*Lb./sq. in.*	*Kg./sq. cm.*	*Lb./sq. in.*	*Kg./sq. cm.*
1	910	500	35	4200	295
2	910	450	32	4090	288
3	870	750	53	4530	318
4	900	680	48	4570	321
5	910	620	44	4450	313
6	880	950	67	5360	377

Cure, 45 minutes at 100° C. 4 strips pulled on each test.

The well-known water-absorbing properties of latex stocks suggested that the cause of this variation might be changes in humidity which normally occur at room conditions. Therefore, tests were run in which the strips were conditioned at controlled humidities until tested. Controlled humidities were maintained in desiccators in which were placed the proper substances to give the desired moisture contents. In the examples reported, 50 per cent relative humidity was obtained over a saturated solution of sodium dichromate, while 0 per cent humidity was obtained over calcium chloride.

The test strips, which had been cured, gaged, and benchmarked, were individually hung in a desiccator and conditioned for 48 hours, and were removed from the desiccator only as they were pulled. Table II and Figure 2 show the effect of variation in relative humidity from 0 to 50 per cent. The modulus at 800 per cent elongation and the tensile strength were both reduced approximately 30 per cent when the relative humidity was increased from 0 to 50 per cent. Elongation increased slightly with increased relative humidity.

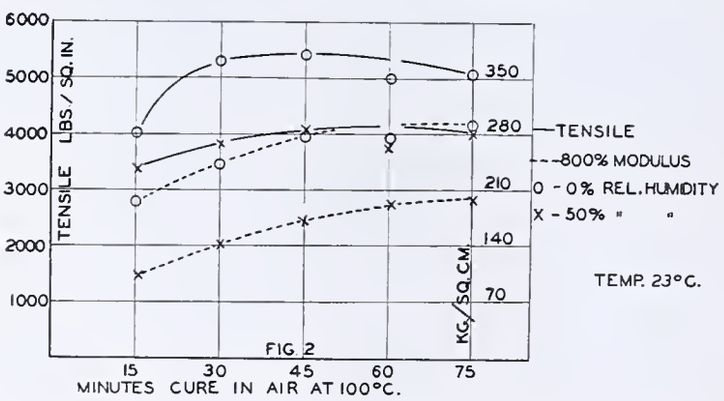

FIGURE 2. EFFECT OF HUMIDITY ON LATEX STOCK

TABLE II. EFFECT OF HUMIDITY ON LATEX STOCK

Cure at 100° C. in Air	Elongation		Modulus at 800 Per Cent				Tensile			
	0%	50%	0%	50%	0%	50%	0%	50%	0%	50%
Min.	%	%	*Lb./sq. in.*		*Kg./sq. cm.*		*Lb./sq. in.*		*Kg./sq. cm.*	
15	900	990	2820	1440	198	101	4010	3400	282	239
30	920	930	3420	2070	240	146	5360	3870	377	272
45	900	900	3980	2490	280	175	5460	4100	384	288
60	870	850	3900	2800	274	197	4980	3850	350	271
75	850	870	4150	2880	292	202	5080	4030	357	283

3 strips tested for each cure.

Thoroughly dried strips were conditioned for 48 hours at indicated humidity before testing.

TABLE III. CONSISTENCY COMPARISON OF LATEX STOCKS *vs.* MILL-MIXED PURE GUM STOCK

Test	Elongation	Modulus at 800 Per Cent		Tensile	
	%	*Lb./sq. in.*	*Kg./sq. cm.*	*Lb./sq. in.*	*Kg./sq. cm.*
		Latex Stock[a]			
1	870	3980	280	5380	378
2	880	3680	259	5180	364
3	880	3860	271	5140	361
		Mill-Mixed Stock[b]			
		Modulus at 600 Per Cent			
1	780	940	66	3080	217
2	800	810	57	3060	215
3	800	850	60	3010	211

[a] Cure, 45 minutes at 100° C. 4 strips pulled on each test. 0% humidity; 23° C.

[b] Cure, 45 minutes at 127° C. Tested at room conditions, 23° C.

This reduction in tensile and modulus values with an increase in relative humidity showed that consistent results could be obtained only when the humidity was controlled up until the time of testing. Conover and Depew (*1*) recommend that regular mill-mixed stocks be conditioned at 0 per cent relative humidity before pulling. While these recommendations are not generally followed on mill-mixed stocks, it is most important that constant and preferably 0 per cent relative humidity be maintained when testing latex stocks.

In order to determine the reproducibility of results by this method (using 0 per cent humidity) the test was repeated three times, the compounding ingredients being identical in each case. A comparison was made with a mill-mixed pure gum stock of the following formula:

Smoked sheets	100
Sulfur	3
Zinc oxide	4
Mercaptobenzothiazole	1

This stock was tested by regular methods. A comparison of the consistency of results from the two types of stocks is shown in Table III. It will be seen that the percentage deviation from batch to batch in the latex stock is favorably comparable to that of the mill-mixed variety.

Summary and Conclusion

Adjustment of stabilizers may be necessary in order to produce a smooth surface on an air-dried latex test slab. A combination of 1 per cent of casein and 1 per cent of Aquarex D on the rubber gave a satisfactory dried slab.

Reproducible results cannot be obtained unless the test strips are conditioned at controlled relative humidity conditions. Zero per cent humidity gave highest tensile and modulus figures.

Batch-to-batch accuracy of latex stocks using methods described herein was comparable to that of mill-mixed pure gum stock.

Literature Cited

(1) Conover and Depew, *Proc. Am. Soc. Testing Materials*, **27**, Part II (1927).
(2) Du Pont Laboratory Report No. 181 (December 4, 1934).
(3) *Vanderbilt News* (September–October, 1934).

RECEIVED September 18, 1936. Presented before the Division of Rubber Chemistry at the 92nd Meeting of the American Chemical Society, Pittsburgh, Pa., September 7 to 11, 1936.

Effect of Temperature on the Consistency of Asphalts

The Viscosity-Temperature Susceptibility Coefficient as an Index

H. G. NEVITT AND L. C. KRCHMA
Socony-Vacuum Oil Company, Incorporated, Kansas City, Mo.

Since the absolute measure of consistency is viscosity, the authors point out that the change of consistency of an asphalt with temperature would be more logically measured as the change of viscosity with temperature. The objections to the usual empirical susceptibility indexes are discussed and the requirements of a satisfactory index outlined.

The viscosity-temperature susceptibility coefficient is presented as a more fundamental viscosity-temperature index based on the A. S. T. M. viscosity-temperature formula and is mathematically represented as

$$S = 0.221 \frac{\text{Log}\left(\frac{\text{Log}\,(\mu_1 + 0.8)}{\text{Log}\,(\mu_2 + 0.8)}\right)}{\text{Log}\,\frac{T_2}{T_1}}$$

where S is the viscosity-temperature susceptibility coefficient and μ_1 and μ_2 are the kinematic viscosities at absolute temperatures T_1 and T_2. Graphically S would be the slope of a straight line connecting the two points obtained by plotting the viscosities of an asphalt, as obtained at two temperatures, on the A. S. T. M. chart D-341-32T. Data presented indicate that the viscosity-temperature susceptibility coefficient is applicable to a wide range of temperatures and viscosities.

THE consistency characteristics of bitumens—i. e., softening points, floats, penetrations, etc.—have been of general nterest. The rate of change of consistency with temperature ıas received particular attention and many noteworthy conributions have been made, such as the thorough reviews ›resented by Holmes, Collins, and Child (*3*) and Traxler and ›chweyer (*7*).

An examination of the various susceptibility factors that ıave been proposed indicates that they are either empirical ndexes based on measurements of certain properties, or, ılthough on a more fundamental basis, are limited to ›nly carefully defined temperature and viscosity ranges. The selected tests may be functions of more than the flow haracteristic, in which case the interrelation between the ests at different temperatures will not entirely be dependent ıpon the flow characteristics; or the relationship, while in-olving only flow characteristics, may not disclose the contancy of the susceptibility under a practically convenient efinition.

The indexes suggested by Holmes, Collins, and Child, based on results obtained on a pressure-still residuum and a Mexican asphalt, have satisfactorily eliminated the large and erratic variations found so objectionable in some "susceptibility factors." However, the results are relative and, as mentioned above, based on a combination of tests that may not measure the change of consistency with temperature under similar conditions. The results are given in units which do not characterize the material except relative to some other. The various indexes are not consistent and therefore cannot be conveniently used together. Finally, they are limited to asphaltic systems on which the penetration can be determined with reasonable accuracy—i. e., they are confined to asphalts in a limited consistency range. Hence such indexes are not entirely satisfactory when the analysis of viscosity-temperature phenomena is the only or primary purpose of their use.

Recognizing the logical tendency to measure consistency in absolute viscosity units (evidenced by recent publications, *5–7*, as well as foreign specifications based on absolute viscosity units) the susceptibility of the consistency of asphalts to temperature change can also be logically evaluated by expressing the viscosity as a function of the temperature, thus placing viscosity-temperature characteristics on a more scientific basis. An index is required that evaluates the susceptibility in basic terms that have physical as well as mathematical significance independent of any variables except the rate of change of the viscosity with temperature.

The asphalt viscosity index (*7*) is one of this nature and in general meets all the requirements with the exception of the last—namely, it is not satisfactorily independent of the defining temperatures or as to the extent of the viscosity range.

Although the viscosity of asphalt will eventually be determined in absolute units at the usual room temperatures in the general asphalt laboratory, most of the present asphalt laboratories are not equipped either as to personnel or equipment to make such viscosity measurements. Hence some fundamental index of the viscosity-temperature characteristics that can be evaluated using the present equipment is necessary. However, the index should be such that, irrespective of the equipment used or the temperature range involved, it will have the same significance as long as the data can be expressed in terms of absolute viscosity units.

Viscosity-Temperature Susceptibility Coefficient

On the basis of the above requirements and conditions, the viscosity-temperature susceptibility coefficient (V. T. S.) first proposed by Nevitt (*4*) is presented as a possible index most satisfactorily meeting these requirements.

The viscosity-temperature susceptibility is based on the present A. S. T. M. chart and the equation (*2*)

$$\text{Log}\,A\,(\mu + 0.8) = KT^c \qquad (1)$$

which has been accepted by the American Society for Testing Materials as the formula which most satisfactorily represents the viscosity of petroleum products as a function of

TABLE I. MIDCONTINENT ASPHALT TEST DATA AND CALCULATED VISCOSITY-TEMPERATURE INDEXES

Sample numbers	1	2	3	4	5	6	7	8	9	10
Saybolt Furol viscosity:										
98.89° C. (210° F.)	6683	2785	1858	1217	810	580	223	93	45.5	....
135° C. (275° F.)	597	365	270	199	143	109	50	....	.....	....
148.89° C. (300° F.)	318	.....	.....	.....	.....	.....	....	....	.....	....
Saybolt Universal viscosity:										
98.89° C. (210° F.)	.....	.....	.....	.....	.....	.....	....	....	.....	242
135° C. (275° F.)	.....	.....	.....	.....	.....	.....	....	251	140	92
Penetration:										
100–5–25	35	59	89	154	232	.....	....	....	.....	....
200–60–0.0	9	15	25	42	68	115	....	....	.....	....
Softening point (ball and ring):										
° C.	58	51.4	46.4	43.0	36.2	32.3	....	....	.....	....
° F.	136.3	124.5	115.5	109.5	97.1	90.1	....	....	.....	....
Viscosity-temperature susceptibility, 98.89° to 135° C. (210° to 275° F.)	0.690	0.635	0.632	0.625	0.630	0.634	0.66	0.66	0.686	0.70
Fluidity factor	197	180	161	69	−206	.....	....	....	.....	....
Fluidity index (*3*)	100	96	98	104	107	.....	....	....	.....	....
Softening point–penetration index (*3*)	80	78	77	100	10–40	.....	....	....	.....	....
Asphalt viscosity index (*6*)	6.4	5.5	5.2	5.0	4.7	4.2	4.1	3.5	3.1	2.9

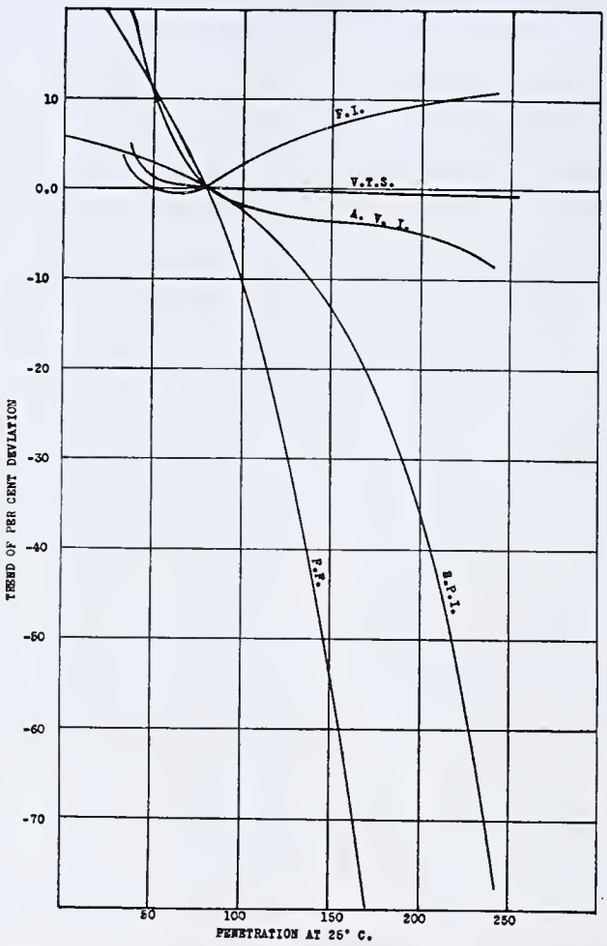

FIGURE 1. TREND OF DEVIATION OF VARIOUS VISCOSITY-TEMPERATURE INDEXES WITH CHANGE OF PENETRATION OF A MIDCONTINENT ASPHALT

temperature. Graphically the viscosity-temperature susceptibility can be defined as the slope of a straight line passing through the points obtained by a plot of two viscosities versus the corresponding two temperatures on the regular A. S. T. M. Tentative Standard D-341-32 T chart. Mathematically it may be defined as:

$$S = K \frac{\text{Log}\left(\frac{(\text{Log } \mu_1 + B)}{(\text{Log } \mu_2 + B)}\right)}{\text{Log } \frac{T_2}{T_1}} \qquad (2)$$

where S is the viscosity-temperature susceptibility coefficient; μ_1 and μ_2 being the absolute viscosities at the absolute temperatures T_1 and T_2; K and B being constants. The accepted A. S. T. M. value for B is 0.8 and for the present A. S. T. M. chart $K = 0.221$. (Viscosities are expressed in centipoises, or in practical use with asphalts in centistokes.)

For the evaluation of the viscosity-temperature susceptibility coefficient it is necessary to have the absolute viscosities of the material at the two temperatures. The Saybolt instrument was used for the measurement of the necessary viscosities, and by applying the American Petroleum Institute viscosity conversion (*1*) the necessary kinematic viscosities were obtained. Saybolt viscosities at 98.89°, 135°, and 149.89° C. (210°, 275°, and 300° F.), with the aid of the three interchangeable (Universal, Furol, and road oil) tips, proved to be feasible for the usual range of viscosities encountered up to approximately 20 penetration asphalt. The data presented compare the viscosity-temperature susceptibility coefficient with the asphalt viscosity index (*7*), the fluidity factor [(Saybolt Furol viscosity at 275° F. − penetration at 77°) $\frac{\text{penetration at } 77°}{100}$ = fluidity factor], the

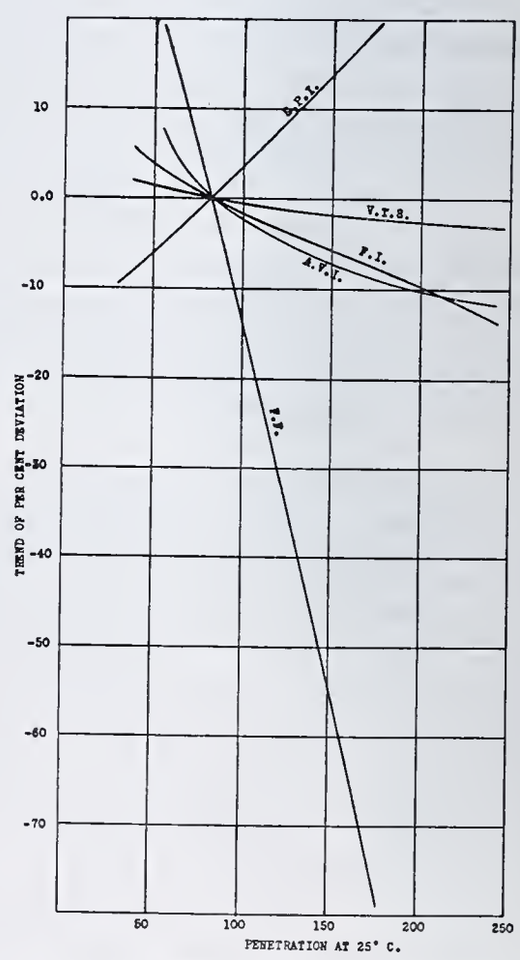

FIGURE 2. TREND OF DEVIATION OF VARIOUS VISCOSITY-TEMPERATURE INDEXES WITH CHANGE OF PENETRATION OF AN OXIDIZED ASPHALT

Table II. Oxidized Asphalt Test Data and Calculated Viscosity-Temperature Indexes

Sample numbers	1	2	3	4
Saybolt Furol viscosity:				
98.89° C. (210° F.)	17900	5440	2210	1452
135° C. (275° F.)	945	422	214	165
Penetration, 100–5–25	47	91	185	225
Softening point (ball and ring):				
° C.	67.22	57.78	50.56	46.11
° F.	153.0	136.0	123.0	115.0
Viscosity-temperature susceptibility, 98.89° to 135° C. (210° to 275° F.)	0.780	0.767	0.769	0.753
Fluidity factor	422	301	53.7	−132
Fluidity index (*3*)	128	118	115	112
Softening point–penetration index (*3*)	140	157	191	200
Asphalt viscosity index (*6*)	7.8	6.8	6.3	5.9

fluidity index, and the softening point–penetration index. To ascertain the latter two, the charts developed for this purpose by Holmes, Collins, and Child (*3*) were used.

The susceptibility characteristics of three asphalts as a function of the penetration were investigated in this respect and the data are summarized in Tables I, II, and III. The trends of results are graphically shown as the per cent deviation of the various indexes from their respective values at

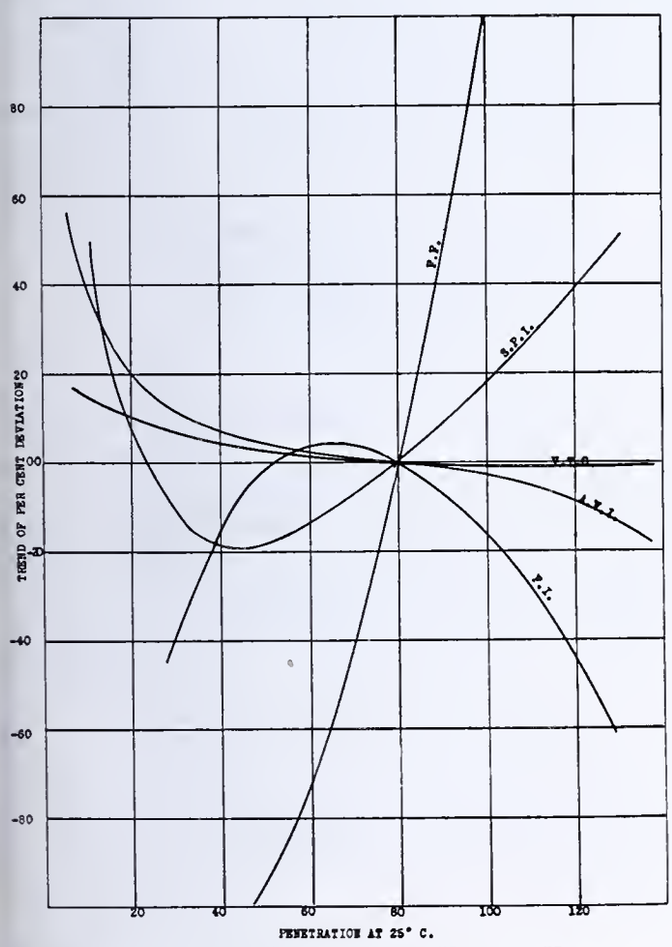

Figure 3. Trend of Deviation of Various Viscosity-Temperature Indexes with Change of Penetration of a Pressure-Still Residuum

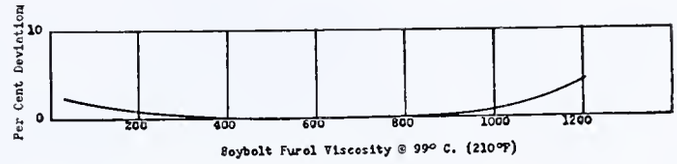

Figure 4. Trend of Deviation of Viscosity-Temperature Susceptibility Coefficient with the Viscosity of a Midcontinent Asphalt

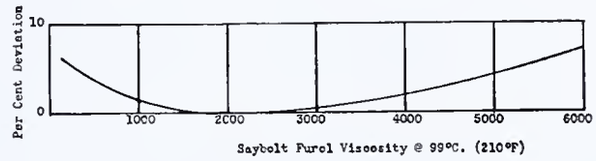

Figure 5. Trend of Deviation of Viscosity-Temperature Susceptibility Coefficient with the Viscosity of a Pressure-Still Residuum

80 penetration, plotted against penetration, in Figures 1, 2, and 3, which represent results for a Midcontinent asphalt, an oxidized asphalt, and a pressure-still residuum, respectively. Eighty penetration was chosen as the reference point as it approximates the middle (2×10^8 centistokes) of the 25° C. viscosity range (approximately 2×10^7 to 2×10^9 centistokes) of the asphalts considered.

Figures 4 and 5 are similar plots of the midcontinent and pressure-still residuum, over an extended viscosity range varying from extremely hard asphalts to heavy road oils. This deviation is plotted using the Saybolt Furol viscosity at 98.89° C. (210° F.) of 80 penetration asphalt as the reference point.

Discussion

The results consistently show the fluidity factor (F. F.) to be erratic, and the softening point–penetration index (S. P. I.) comparatively erratic, while the fluidity index (F. I.) is much more consistent, but approaches constancy only over a relatively small range of consistencies. The asphalt viscosity index (A. V. I.) is constant, but only over a small range of consistencies. The viscosity-temperature susceptibility coefficient (V. T. S.), except for extremely hard asphalts, is satisfactorily independent of the consistency; it appears to offer a characterization index for asphalts, having a practically constant value for each source. Its increase at low penetration may be characteristic of the material at this viscosity (the order of magnitude is 10^{10} centipoises at 25° C.), or may be due to the failure of the basic A. S. T. M. equation to apply satisfactorily to such extremely viscous systems.

The viscosity-temperature susceptibility coefficient as defined is applicable to any two specified temperatures or viscosity range. Similarly the asphalt viscosity index can be calculated for any two temperatures. The effect of changing the definition temperatures and hence the viscosity merits some attention. If all asphalts plotted as a straight line on the A. S. T. M. viscosity-temperature chart, there would be no

Table III. Pressure-Still Residuum Test Data and Calculated Viscosity-Temperature Indexes

Sample numbers	1	2	3	4	5	6	7	8	9
Saybolt Furol viscosity:									
98.89° C. (210° F.)	4850	2360	1350	1023	704	472	418	294	246
135° C. (275° F.)	170	108	88	77	62	50	47	38	35
Penetration, 100–5–25	4	8	16	18	26	44	63	90	116
Softening point (ball and ring):									
° C.	61.11	60.0	55.0	54.44	53.33	48.89	45.56	43.33	41.67
° F.	142.0	140.0	131.0	130.0	128.0	120.0	114.0	110.0	107.0
Viscosity-temperature susceptibility, 98.89° to 135° C. (210° to 275° F.)	1.075	1.07	1.000	1.025	0.970	0.935	0.925	0.920	0.905
Fluidity factor	6.64	8.0	11.5	10.6	9.4	2.6	−10.0	−46.8	−94.0
Fluidity index (*3*)	.....	.....	.....	.....	10	12	16	14	10
Softening point–penetration index (*3*)	−60	−17	−12	− 6	13	14	8	9	10
Asphalt viscosity index (*6*)	9.0	8.6	7.3	6.9	6.5	6.0	5.9	5.6	5.3

Table IV. The Change in Viscosity-Temperature Susceptibility Coefficient and Asphalt Viscosity Index with Change of Defining Temperatures

V. T. S., ° C.	Data of Saal and Koens: Bitumen A	Bitumen B	Data of Pittman and Traxler[a]: Bitumen A	Bitumen B	Bitumen C	Bitumen D	Bitumen E
15–35	1.16	1.08	0.753	0.797	0.930	0.720	0.762
25–50	1.14	1.123	0.790	0.881	0.902	0.835	0.832
25–60	1.147	....	....	....	....	....	....
70–100	....	....	0.759	0.782	0.861	0.764	0.699[b]
75–100	1.141	....	....	....	....	....	....
A. V. I.							
15–35	24.3	28.4	20.6	20.9	24.6	19.9	20.0
25–50	19.0	24.4	18.5	19.9	19.7	18.6	18.8
25–60	12.2	....	....	....	....	....	....
70–100	....	....	9.8	9.5	9.9	9.4	9.3
75–100	8.1	....	....	....	....	....	....

[a] Bitumen A, Mexican; bitumen B, Venezuelan; bitumen C, Trinidad; bitumen D, Bermudez Lake; bitumen E, Trinidad Lake.
[b] Calculated on the basis of the 70°–90° C. viscosities. Erratic viscosity at 100° C. possibly due to rapid settling of inherent mineral matter.

variation as the temperatures changed. Actually not all asphalts do give an exactly straight line. Typical values of the viscosity-temperature susceptibility coefficient and the asphalt viscosity index over various temperature ranges from the data of Saal and Koens (*6*) and Pittman and Traxler (*5*) are shown in Table IV. The data as presented indicate that the asphalt viscosity index is dependent on the defining temperature; hence in this respect, if it is used as an index for temperature susceptibility at any temperature other than those originally defined, the results rapidly lose significance, as large deviations occur between the normal room temperature-viscosity ranges and viscosity ranges in the neighborhood of 100° C.

The change in the viscosity-temperature susceptibility coefficient with change in determining temperatures is small in most instances as compared to the relatively large changes in the asphalt viscosity index. However, to eliminate all question along this line it is recommended that the viscosity-temperature susceptibility coefficient be determined from two standardized temperatures such as 98.89° and 135° C. (210° and 275° F.), since at present at these temperatures the generally accepted Saybolt instrument can be conveniently used. Possibly at a later date it will be found better to use other temperatures. However, this is a minor point and has no great practical importance in connection with either the use of the viscosity-temperature susceptibility coefficient or its relative merits as a temperature-susceptibility index as here discussed.

Table V represents the viscosity-temperature susceptibility coefficient of several domestic asphalts in order of their viscosity-temperature susceptibility, as determined between the temperatures of 98.9° C. (210° F.) and 135° C. (275° F.) using the commercially available Saybolt viscometer. The values for the usual straight-run asphalts var from 0.73 for Midcontinent and Illinois asphal to 0.85 for Californian asphalts. The pressure still residuum, as would be anticipated, has relatively high viscosity-temperature suscept bility coefficient as represented here by 0.966 However, as these products vary considerably the coefficient of pressure-still residua will var from 0.95 to 1.1. Although insufficient data ar available, coal-tar pitches have a viscosity-tem perature susceptibility coefficient of approxi mately 1.1 to 1.5.

Conclusions

In general the viscosity-temperature suscepti bility coefficient appears best to meet the techni cal and practical requirements of fundamentally defining the viscosity-temperature characteristics for a wide range of consistencies and temperatures, which was not here tofore practical with the usual empirical consistency index The asphalt viscosity index, although having fundamenta significance, is limited to relatively narrow temperatures an viscosity ranges. It appears to be a satisfactory index whe these are carefully defined. The fluidity index is the mos consistent of the empirical indexes and appears to be, i conjunction with the indexes suggested by Holmes, one mean of characterizing asphaltic materials.

The previous discussion of the merits of the viscosity-tem perature susceptibility coefficient versus other indexes ha no necessary bearing on the qualities of the asphalt for specifi uses. Possibly some of the indexes reviewed do have meri in this connection, because other than consistency character istics are involved. At present no correlation is suggested between the desirability of the product and the viscosity-temperature susceptibility coefficient, except where the change in viscosity with temperature is the only factor to be considered.

Table V. Test Data and Viscosity-Temperature Susceptibility Coefficient of Domestic Bitumens of Various Sources[a]

	Midcontinent Oklahoma	Illinois	Wyoming B. Crude	Smackover	West Texas	Californian	Pressure Still Residuum
Penetration, 25° C. (77° F.), 100 grams 5 seconds	82	106	133	92	102	96	89
Softening point (ball and ring):							
° C.	45.6	46.1	40.6	44.4	42.2	42.2	43.9
° F.	114	115	105	112	108	108	111
Saybolt Furol viscosity:							
98.9° C. (210° F.)	1620	1670	890	1520	790	880	363
135° C. (275° F.)	188	191	112	179	95	90	.....
Saybolt Universal viscosity, 135° C. (275° F.)	.....	.....	.....	.....	.....	.....	381
Viscosity-temperature susceptibility, 98.9° to 135° C. (210° to 275° F.)	0.732	0.737	0.765	0.766	0.800	0.855	0.966

[a] From data collected at the Montana Highway Commission Laboratories.

Literature Cited

(1) Am. Petroleum Inst., Rept. of Committee on Viscosity Standards, 1922–1924.
(2) Am. Soc. Testing Materials, *Proc.*, **32**, I, 772 (1932).
(3) Holmes, Collins, and Child, Ind. Eng. Chem., Anal. Ed., **8**, 10 (1936).
(4) Nevitt, *Petroleum Engr.*, **5**, No. 2, 28–32 (1933).
(5) Pittman and Traxler, *Physics*, **5**, 221–4 (1934).
(6) Saal and Koens, *J. Inst. Petroleum Tech.*, **19**, 176–212 (1933).
(7) Traxler and Schweyer, *Physics*, **7**, pp. 67–72 (1936).

Received August 25, 1936. Presented before the Division of Petroleu Chemistry at the 91st Meeting of the American Chemical Society, Kansa City, Mo., April 13 to 17, 1936.

Areametric Estimation of Small Amounts of Sulfate as Barium Sulfate

V. R. DAMERELL AND P. SPREMULLI
Western Reserve University, Cleveland, Ohio

RECENTLY a method was published for the estimation of small amounts of heavy precipitates by measuring the apparent area of the spot formed when the precipitate was gathered to the center of the flask bottom (*2*). The present authors have used a similar technic in the case of barium sulfate, and have succeeded in working out a method which for certain types of analyses not requiring great accuracy has several advantages over methods in use at present (*3*).

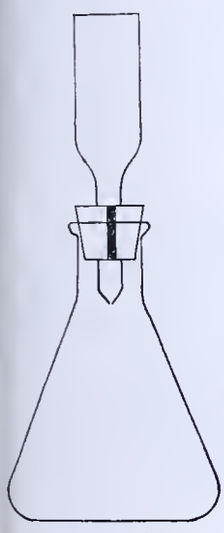

FIGURE 1. APPARATUS USED FOR BARIUM SULFATE PRECIPITATION

The apparatus is simpler than that used for any of the present comparable methods, including the centrifugal (*1*), since only a 50-cc. Erlenmeyer flask, a dropping tube, and a millimeter rule are required. The technic is correspondingly simple, and smaller amounts (0.01 to 4 or more milligrams) can be determined than in the case of most other methods in use at the present time, including the centrifugal method. These qualifications make the method valuable for such routine analyses as sulfate in water, sulfate impurities in chemicals, and sulfur in certain organic materials.

Precipitation of Barium Sulfate

A great many methods of precipitation were tried, and at first considerable difficulty was encountered in obtaining a sufficiently reproducible crystal size. After some experimenting, it was found that by dropping the (acid) solution of barium chloride into a swirling, boiling solution containing the sulfate, reproducible results could be obtained. Accordingly, the following directions were used:

A solution 0.1 *M* in hydrochloric acid and 0.01 *M* in barium chloride was saturated with barium sulfate and filtered. This was the precipitating reagent. A 25-cc. pipet was cut off at the top of the wide part and drawn out in the middle of the lower narrow part, to make a dropping funnel. The opening at the small end was made of such a size that water ran through at a rate of approximately a drop a second when 10 cc. of liquid were in the tube. The small part of the tube was put through a one-holed, grooved rubber stopper.

Ten cubic centimeters of the solution containing sulfate were put in a 50-cc. Pyrex Erlenmeyer flask. The solution had been made neutral by adding very dilute sodium hydroxide and hydrochloric acid until phenolphthalein just turned colorless. The stopper containing the dropping tube was put in the flask (Figure 1) and the whole was held by a test-tube holder and swirled over a small flame until boiling started. Then 10 cc. of barium chloride–hydrochloric acid solution were put in the dropping tube, and the flask was swirled and the contents were boiled while the barium chloride solution dropped in. The rate of boiling was so adjusted that the volume remained at approximately 10 cc.

After the barium chloride solution had all run in and the resulting volume was about 10 cc., the stopper and dropping tube were removed, and the flask was at once tightly stoppered and allowed to cool for 30 minutes or longer. If the amount of precipitate formed was about 0.2 mg. or more, it could be measured after 30 minutes. For smaller amounts than this, the authors allowed the flask to stand overnight.

Measurement of Precipitates

The flask bottom was first cleaned and dried, and the flask was swirled twenty or thirty times, to bring most of the precipitate to the center of the flask. Then, after allowing a minute or two for settling, the flask was tipped, so that the edge of the liquid crept across the flask bottom nearly to the center, or to the edge of the spot of precipitate. This movement, to sweep the remaining precipitate to the center, was repeated about ten times to the left, ten times to the right, and ten times each backwards and forwards, although occasionally a precipitate adhered to the flask bottom so tightly that more tipping was necessary.

When the precipitate was essentially all in the center of the flask bottom, the flask was swirled gently. In this operation the bottom of the flask was kept against a piece of black, glazed paper, and the flask was moved in small circles. This caused the precipitate to form a cone with steeper sides than could normally exist when the flask was not in motion, so that when rotating was stopped (after fifteen or twenty circles) the precipitate flowed outward from the pile, automatically adjusting the height of the pile and producing sharp, smooth edges. Infrequently a precipitate of such character was obtained that this rotation produced a scattering, and then the earlier vibration technic had to be used (*2*). The average diameter of these spots was estimated to the nearest 0.1 mm. with a transparent millimeter rule against a white background. For the smaller spots a standard spot card, described earlier (*2*), was used, although this was not indispensable. The areas were rapidly obtained from the

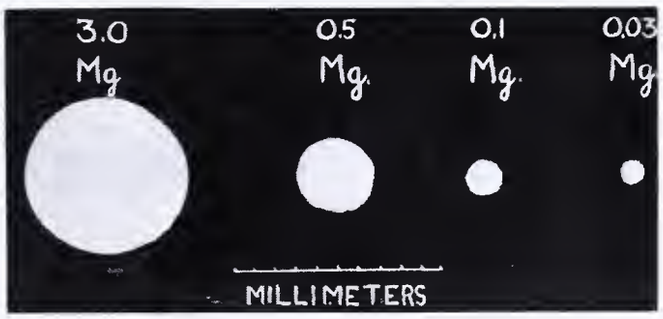

FIGURE 2. PHOTOGRAPHS OF BARIUM SULFATE SPOTS

TABLE I. REPRESENTATIVE RESULTS USING POTASSIUM SULFATE SOLUTIONS WITH AND WITHOUT IMPURITIES

Sulfate Present *Mg.*	Impurity Present	Sulfate Found *Mg.*	Sulfate Present *Mg.*	Impurity Present	Sulfate Found *Mg.*
0.01	None	0.01	0.30	1 gram $MgCl_2$	0.31
0.03	None	0.04	0.50	1 gram $MgCl_2$	0.45
0.08	None	0.08	0.01	1 gram KCl	0.03
0.10	None	0.11	0.50	1 gram KCl	0.53
0.30	None	0.27	2.0	1 gram KCl	1.9
0.50	None	0.45	2.0	1 gram $CaCl_2$	2.3
0.70	None	0.72	0.03	1 gram NH_4Cl	0.05
1.0	None	0.9	0.08	1 gram NH_4Cl	0.06
2.0	None	1.9	0.10	1 gram NH_4Cl	0.14
3.0	None	3.0	0.70	1 gram NH_4Cl	0.59
4.0	None	4.0	3.0	1 gram NH_4Cl	2.9
0.30	1 gram NaCl	0.40			
0.70	1 gram NaCl	0.50			
2.0	1 gram NaCl	1.9			
3.0	1 gram NaCl	2.8			

diameters by a numerical table. The diameters themselves could have been used instead of the areas, but in view of the possibility of an occasional irregular spot the areas were considered more trustworthy. The areas so obtained were then compared to those produced by known amounts of barium sulfate, completing the analysis.

Examples of spots obtained are given in Figure 2, and representative results are given in Table I, including results obtained in the presence of large amounts of sodium, calcium, magnesium, potassium, and chloride ions. Average areas, corresponding to various weights of precipitates, are shown by the curve in Figure 3. However, for the best results, individual flasks should be calibrated with known amounts of barium sulfate, since with the swirling technic different flasks gave somewhat different areas for the same weight of barium sulfate, particularly with the larger amounts.

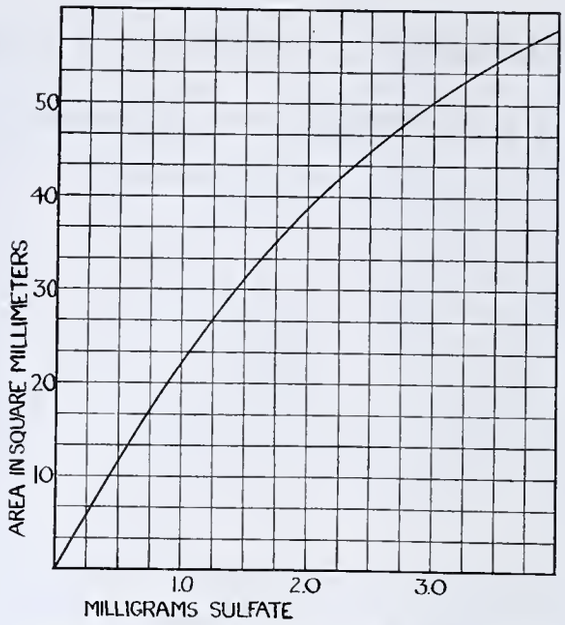

FIGURE 3. AVERAGE AREAS OF BARIUM SULFATE PRECIPITATES

Discussion

Errors in the method are chiefly due to differences in crystal size and possibly in shape and not to errors in measurement, as good checks could be obtained on the latter for an indefinite number of times with any given sample. The authors believe that the point to watch most carefully in the entire procedure is the first addition of barium chloride solution, since this governs the number of crystal nuclei formed, which in turn governs the number and size of those eventually formed.

The solution was boiled down to the volume occupied by the (barium sulfate–saturated) barium chloride solution. In this way any solution of barium sulfate was overcome. Actually there was a small blank, about 0.005 mg., probably due to the volatilization of a small amount of hydrochloric acid in the boiling, with resulting decreased solubility of the barium sulfate.

The flask was tightly stoppered at once after boiling the solution, because this seemed largely to eliminate the formation of precipitate on the surface of the liquid.

For very small amounts (0.1 to 0.01 mg.) it was not necessary to use such care in the addition of the barium chloride solution, because the main portion of the precipitate did not form until after the solution had cooled.

The method has several advantages besides requiring a very simple apparatus and technic. The determination is made in the precipitation flask, and there is no transferring or filtering. No indicator or titration is required, and no weighing. The spot size can be easily measured in a colored solution. A working time of only about 15 minutes is required for a determination. This, added to a standing time of half an hour makes a total time of 45 minutes for the estimation of 0.2 mg. or more. The standing time for less than 0.2 mg. is longer. The precipitate is not destroyed in the determination, and may be used later in another way, if desired. The area of the spot can be checked as many times as desired. Finally, if an occasional precipitate forms of such a character that an inaccurate measurement will result, the analyst usually becomes aware of this in handling it, and he can make a correction or discard the sample without blindly getting an erroneous result.

Literature Cited

(1) Arrhenius, O., *J. Am. Chem. Soc.*, **44**, 132 (1922).
(2) Damerell, V. R., and Axelrod, M., *Ibid.*, **57**, 2725 (1935).
(3) Schroeder, W. C., IND. ENG. CHEM., Anal. Ed., **5**, 403 (1933).

RECEIVED September 21, 1936. Presented before the Division of Physica and Inorganic Chemistry at the 91st Meeting of the American Chemical Society, Kansas City, Mo., April 13 to 17, 1936.

Rare Earth Salts

Precipitation and pH Studies with the Glass Electrode

J. A. C. BOWLES[1] AND H. M. PARTRIDGE, Washington Square College of New York University, New York, N. Y.

THE pH values at which some of the rare earth salts are precipitated from their solutions by alkalies have been investigated to some extent by Hildebrand (*4*) and Britton (*2*) with the use of the hydrogen electrode.

The present pH investigation was done by use of the glass electrode on solutions of the sulfates of lanthanum, cerous and ceric cerium, praseodymium, neodymium, ytterbium, and thorium, also the chlorides of neodymium and lanthanum.

Since most methods for the separation of cerium from the other rare earths depend upon the oxidation of the cerium to the ceric state and the ultimate precipitation of the element as a basic ceric salt (nitrate or sulfate), and since this salt is sparingly soluble even in a fairly strong acid solution, a method for separating cerium by simply controlling the pH suggested itself.

[1] Present address, United Drug Company, Boston, Mass.

The changes in potential at the surface of the glass cell were measured by a vacuum-tube null-indicator used and described by the authors (*6*) in an investigation of the pH of normal and malignant tissues.

In this work the ordinary saturated calomel electrode was used as the reference electrode. A potassium chloride agar-agar bridge connected this electrode to the solution being measured. Any contact potentials developed were not a source of error, because the whole system was calibrated at constant temperature before and after a series of measurements with buffers of known pH values. The buffer solutions were those of Clark and Lubs (*3*) and were compared with the quinhydrone and two hydrogen electrodes. The two calibrations, even after a titration lasting 18 hours, were never found to vary by more than two or three hundredths of a pH unit and this difference was in the low and high pH regions.

The solutions were titrated in an air chamber whose temperature was 25° ± 0.3° C., using a Beaver regulator in con-

junction with a mercury-alcohol regulator. The heat was furnished by a nichrome resistance and was circulated throughout the bath by a small electric fan.

The volume of the titration vessel was approximately 125 ml. and the volume of the solution titrated was 50.00 ml. in all cases, with the exception of the thorium and ceric salts where 45.00 ml. were used. The solutions were titrated against sodium hydroxide and were stirred by tank nitrogen.

Sources of Salts Investigated

The cerium was procured from Oscar T. Coffelt of Jackson, Mich. The thorium was kindly furnished by H. C. Fogg of the University of New Hampshire. All the salts used were spectroscopically pure, with the exception of the neodymium sulfate which contained a few tenths of 1 per cent of praseodymium. The neodymium, titrated as chloride, was spectroscopically pure and was loaned by C. J. Rodden. The praseodymium and ytterbium sulfates were the identical samples used by Rodden (*7*) in his work on the paramagnetism of these ions, and the authors are very grateful for the loan of these salts. The remainder of the salts was procured from the collection of the late Charles James of the University of New Hampshire.

Standardization of Solutions at 25° C.

The anhydrous sulfates of lanthanum, cerium, and neodymium were heated to constant weight at a temperature of about 600° C. Exactly 0.01 *M* solutions were prepared at 25° C. by the addition of the required volume of carbon dioxide–free distilled water.

The thorium sulfate was prepared by dissolving the anhydrous sulfate in 0.0792 *N* sulfuric acid. The molarity was 0.00975, ascertained by precipitating as oxalate and igniting to oxide.

Lanthanum and neodymium chlorides were standardized in the same way as the thorium sulfate, but in this case the hydrated salts were dissolved in distilled water. The molarity of the lanthanum chloride was 0.01128, and of the neodymium chloride, 0.01076.

Praseodymium and ytterbium sulfates were weighed directly as their octohydrates. The molarity of the former was 0.01298 and of the latter, 0.01108.

The anhydrous ceric sulfate was dissolved in 0.1418 *N* sulfuric acid. Because this salt hydrolyzes in sulfuric acid of this concentration, the solution was standardized as soon as it was prepared and titrated immediately against a freshly prepared solution of Mohr's salt of exactly 0.01 *M* strength. The indicator was orthophenanthroline ferrous complex and the titrations were carried out in the manner of Walden, Hammett, and Chapman (*8*). The molarities of three different solutions were, respectively, 0.007828, 0.01119, and 0.01134.

The ceric ammonium sulfate was dissolved in 0.0792 *N* sulfuric acid and standardized in the same manner as the simple sulfate. The molarity was found to be 0.01048. Although this ceric salt was dissolved in a much less concentrated acid, the solution remained clear for nearly 2 weeks, whereas the anhydrous ceric sulfate solution remained clear for only 5 to 8 hours.

Titration of Salts

Lanthanum Sulfate. This solution was titrated against 0.1029 *N* sodium hydroxide. After a few tenths of a milliliter of alkali had been added and until practically all of the cation had been removed from solution by further addition of alkali, an apparent equilibrium was attained within a minute or two. The titration curve shows that after about one-half the equivalents necessary for complete precipitation as hydroxide had been added, a further addition of alkali, after a few minutes, gave a potential that indicated that the solution had become more acid.

It is difficult to say just what precipitate was formed, but along with the formation of a basic salt, there is evidence of a reaction between the sodium sulfate (formed from the reaction of the alkali and the simple sulfate) and the simple sulfate. This appeared probable because the cerite members of the rare earths form sparingly soluble double sulfates with alkali sulfates. Furthermore, ytterbium gave no such break in its curve and ytterbium sulfate forms no insoluble double sulfates with alkali sulfates. If some double salt of lanthanum was formed, it appeared to be stable for some time in a solution of pH about 8.5. The bulk of the precipitate was probably a basic salt which reacts with alkali even after all of the cation has been removed from solution. As the time required for the complete conversion of this basic salt appeared to be indefinite, to obtain the point where precipitation was complete, potential readings (toward the end of the titration) were taken soon after the addition of alkali.

In three titrations the first indications of a visible precipitate were at pH 7.59, 7.62, and 7.62, respectively. At these points 0.31, 0.30, and 0.31 ml., respectively, of alkali had been added; with the further addition of alkali the solution became increasingly turbid, and opaque after 5 ml. had been added.

Lanthanum Chloride. The titration of lanthanum chloride proved to be very different from the sulfate. At no time during the titration was a steady potential reached soon after the addition of alkali; even at the beginning about 15 to 60 minutes were required to lapse after each addition of the alkali. About 5 hours were taken for the first milliliter. The precipitate was not dense and opaque as was the sulfate, but gave to the solution a thin bluish opalescence until within about 2 ml. of the total volume necessary for complete precipitation. The precipitate did not coagulate until after the end point. This point of coagulation was definite, occurring on duplicates within 0.1 ml. of added precipitant.

Precipitation in the two titrations began at pH 8.04 and 8.02 upon the addition of 0.48 and 0.42 ml. of alkali, respectively. The titration curve shows that the pH changes were smaller, even after the addition of a large volume of alkali, than in the case of the sulfate, and that 2.76 equivalents of the necessary 3 were required for complete precipitation.

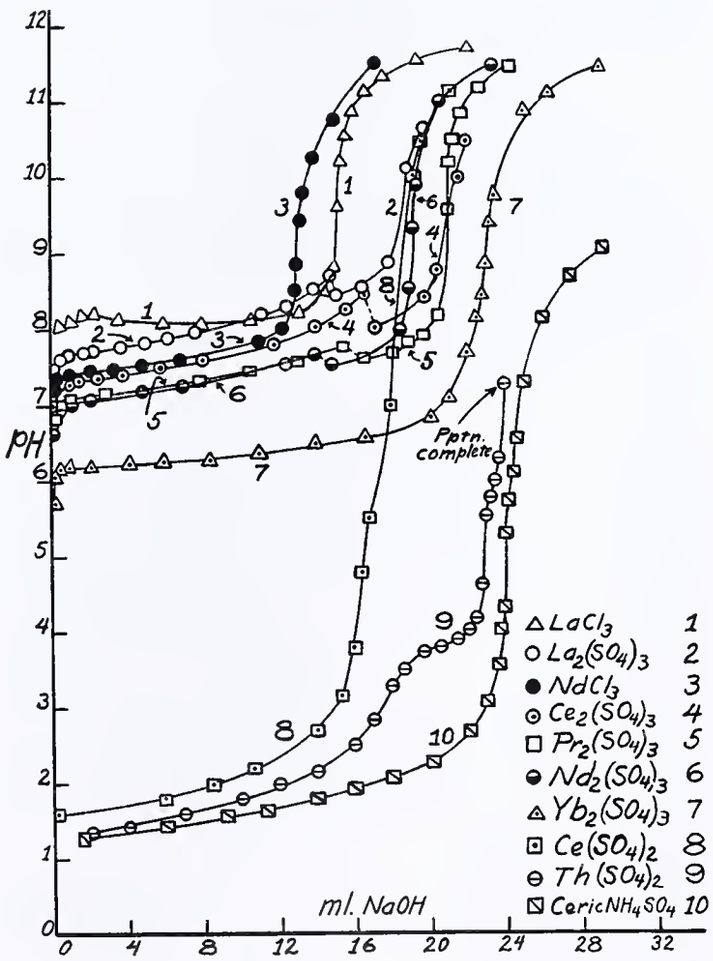

Figure 1. Precipitation of Thorium and Rare Earths

Curves 1 to 8, inclusive, represent 50 ml. of solution titrated against 0.1029 *N* sodium hydroxide. Curves 9 to 10, inclusive, represent 45 ml. of solution titrated against 0.2037 *N* sodium hydroxide. In curve 8 add 22.33 ml. to obtain the amount of alkali actually used.

Cerous Sulfate. The titration of this salt resulted in a curve very similar to that of lanthanum sulfate. Again, a steady potential was obtained within 2 minutes after each addition of alkali until the point for complete precipitation was approached. Precipitation began at pH 7.07 after the addition of 0.19 ml. of alkali.

Neodymium Sulfate and Praseodymium Sulfate. The titration of these salts resulted in curves similar to those of lanthanum and cerous sulfates. Neodymium precipitation began at pH 6.72 and praseodymium at pH 6.98.

Neodymium Chloride. A smooth curve was obtained in the titration of this salt, but the point at which precipitation began was difficult to ascertain, owing to the combined effect of the pink color of the solution and the colloidal nature of the precipitate—the curve indicates a pH of 7.1, but a visible precipitate was not observed until the solution had a pH of 7.4. From the curve complete precipitation resulted when 2.57 equivalents had been added. Britton (*2*) found 2.53 for the chloride at 17° C., with which this work is in fair agreement, but he observed the formation of a precipitate at pH 7.00.

Table I. Precipitation of Rare Earths

(Temperature 25° C.)

Soln. Titrated, 50 Ml.	Molarity	NaOH Normality	Precipitation Began Ml. of NaOH	pH	Equivalent NaOH for Complete Precipitation
$La_2(SO_4)_3$	0.01000	0.1029	0.31	7.61	3.89
$LaCl_3$	0.01128	0.1029	0.45	8.03	2.76
$Ce_2(SO_4)_3$	0.01000	0.1029	0.19	7.07	4.32
$Nd_2(SO_4)_3$	0.01000	0.1029	0.15	6.73	3.75
$NdCl_3$	0.01076	0.1029	0.42	7.40	2.57
$Pr_2(SO_4)_3$	0.01298	0.1029	0.38	6.98	3.33
$Yb_2(SO_4)_3$	0.01108	0.1029	0.35	6.16	4.14
45 ml.					
$Th(SO_4)_2$[a]	0.00975	0.2037	21.99	3.91	3.02
Ceric NH_4SO_4[a]	0.01048	0.2037	22.14	2.75	2.69
$Ce(SO_4)_2$[b]	0.01119	0.2037	36.11	2.65	...

[a] Dissolved in 0.0792 *N* sulfuric acid.
[b] Dissolved in 0.1418 *N* sulfuric acid.

Ytterbium Sulfate. The titration of this salt proved to be very interesting. The curve obtained was smooth and its slope changed less with each addition of alkali than did the other rare earth sulfates. This earth is next to the last of the rare earth family and forms no insoluble double sulfates with alkali sulfates; no break in the curve was found in this case, as in the titrations of the sulfates that do form sparingly soluble double sulfates with alkali sulfates. Precipitation began at pH 6.16 and only 4.14 equivalents were required for complete precipitation (Figure 1 and Table I).

Thorium Sulfate. Thorium sulfate gave very different results from the rare earth sulfates for, even after the free acid (the salt was dissolved in 0.0792 *N* sulfuric acid) had been neutralized, no visible precipitate was observed until 1.63 equivalents of alkali had been added. The pH of the solution in the first titration where this faint precipitate appeared was 3.94 and in the second 3.88. In the first titration the solution was still practically clear even after 2.32 equivalents had been added; the pH at this point was 4.30. In the second titration a good opalescence was observed after the addition of 2.48 equivalents; the pH at this point was 4.66. The solution became milky at pH 5.51 and opaque at pH 6.00. After 3.01 equivalents of alkali had been added the solution was filtered and the filtrate was tested for thorium, but none was found.

Britton (*1*) and others have observed that the addition of alkali does not precipitate thorium sulfate immediately from solution; a "soluble basic salt" is thought to be formed. Britton observed a precipitate at pH 3.53 at 15° C.

Ceric Ammonium Sulfate. This salt was dissolved in 0.0792 *N* sulfuric acid. The solution was a brownish yellow and remained clear for 2 weeks. Its molarity was 0.01048, and as in the case of thorium, 45 ml. were titrated against 0.2037 *N* sodium hydroxide.

The cerium remained in the colloidal state at the beginning, for after the free acid had been neutralized no precipitation was observed in three titrations until 1.94, 1.96, and 2.12 equivalents of alkali had been added. The pH's of the above solutions, where precipitation began, were 2.71, 2.72, and 2.82, respectively. The average number of equivalents required for complete precipitation in these three titrations was 2.69. The average pH for complete precipitation was 4.50.

In the third titration the solution had a pH of 5.84 after the addition of 2.90 equivalents of the necessary 4 required for complete precipitation as pure ceric hydroxide. After filtering the solution the filtrate was tested for cerium, but none was found.

Ceric Sulfate. This salt was dissolved in 0.1418 *N* sulfuric acid, standardized, and used immediately. The molarities of the three ceric solutions used were, respectively, 0.007828, 0.01119, and 0.01134; they were titrated against 0 2037 *N* sodium hydroxide. Before titrating solutions 2 and 3, 10 ml. of 0.4550 *N* sodium hydroxide were added; a precipitate formed, but the solutions became clear again within a few minutes. The color of the original solution was a brownish yellow which changed to a pale greenish yellow after the addition of the 10 ml. of 0.4550 *N* sodium hydroxide. Solution 3 was allowed to stand for 1.5 hours after the addition of the concentrated alkali; it became opaque and its pH was 1.60.

Solutions 1 and 2 were titrated immediately and after the free acid had been neutralized a precipitate was observed when the solutions had a pH of 2.64 and 2.65, respectively. At these two pH's, 1.72 and 1.95 equivalents of alkali had been added. The precipitate in the second case apparently remained longer in the colloidal state. The average pH for complete precipitation was 4.64.

The pH at which ceric sulfate precipitates from solution was not as definite as in the case of ceric ammonium sulfate, for a noticeable precipitate occurred in stock solutions 1 and 2, 5 hours after their preparation and standardization. Very likely because of this, the titrations were less satisfactory than those of ceric ammonium sulfate.

Separation of Cerium from Lanthanum

In view of the results obtained with ceric sulfate, it was thought that by simply controlling the pH of a solution containing ceric cerium and other rare earths, a good separation of cerium could be realized.

To a solution containing 30 ml. of 0.01134 *M* ceric sulfate in 0.1418 *N* sulfuric acid and 30 ml. of 0.01 *M* lanthanum sulfate, sodium hydroxide solution was added until the resultant pH was 5.78. At this pH all of the ceric cerium should have been precipitated. (Lanthanum sulfate in preceding work was found not to precipitate until pH 7.62.) The same amount of standard sodium hydroxide used to obtain the desired pH was added to three samples identical with the above test solution. The precipitate formed was filtered and washed with distilled water. To the filtrate was added oxalic acid and the resultant precipitate was filtered, washed, and ignited in an electric muffle furnace to about 900° C. The results shown in Table II were obtained.

Table II. Separation of Lanthanum

Sample	Lanthanum Present *Gram*	Lanthanum Found *Gram*
1	0.0978	0.0971
2	0.0978	0.0971
3	0.0978	0.0976

The oxides from the ignition of the oxalates were dissolved in hydrochloric acid and tested for cerium by the delicate peroxide test. In all cases a very faint yellow color was observed, showing the presence of a very small amount of cerium.

Comparing the weights of lanthanum recovered with the weights of lanthanum present, the above separation may be considered satisfactory. The amount of cerium in the lanthanum precipitates as observed from the yellow color was minute, and its presence may be attributed to reduction of the ceric sulfate stock solution (*5*). Cerous sulfate was previously found not to precipitate until pH 7.07.

Summary

Titrimetric and pH studies with the glass electrode and vacuum-tube null-indicator of some rare earth salts and thorium sulfate at 25° C. have been made. The order of increasing basicity and likewise the order in which the salts studied precipitated were found to be as follows: ceric cerium, thorium, ytterbium, neodymium, praseodymium, cerous cerium, and lanthanum.

Precipitates formed during titration of the rare earth chlorides remained colloidal until a slight excess of sodium hydroxide (necessary for complete precipitation of the cation) had been added.

The rare earth sulfates precipitated from solution upon the addition of sodium hydroxide at a lower pH than did the chlorides.

The work shows more clearly than ever the impracticability of separating the rare earths by fractional precipitation with hydroxides (except ceric cerium), as there is only a pH difference of 1.46 between lanthanum and ytterbium, which includes 14 of the 15 rare earth elements.

A method for separating cerium from lanthanum by simply controlling the pH of the solution is suggested.

Literature Cited

(1) Britton, H. T. S., *J. Chem. Soc.*, **127**, 2110–20 (1925).
(2) *Ibid.*, **127**, 2142–7 (1925).
(3) Clark, "Determination of Hydrogen Ions," Baltimore, Williams & Wilkins, 1928.
(4) Hildebrand, J., *J. Am. Chem. Soc.*, **35**, 847 (1913).
(5) Mellor, J. W., Treatise, Vol. V, p. 661 (1924).
(6) Partridge, Bowles, and Goldfeder, *J. Lab. Clin. Med.*, **19**, 10, 1100 (1934).
(7) Rodden, C. J., *J. Am. Chem. Soc.*, **56**, 648 (1934).
(8) Walden, Hammett. and Chapman, *Ibid.*, **53**, 3908 (1931).

RECEIVED September 15, 1936. Submitted in partial fulfillment of the requirements for the degree of doctor of philosophy at New York University.

A Dithizone Method for Measurement of Small Amounts of Zinc

P. L. HIBBARD, University of California, Division of Plant Nutrition, Berkeley, Calif.

The dithizone method is a means for very quickly measuring to 5 to 10 per cent the small amounts of zinc commonly present in animal, vegetable, and many other substances. Qualitatively it appears to be the quickest and most sensitive test for zinc ion now known. It is accurate enough for most purposes.

The zinc must first be brought into solution by suitable means. The solution is made alkaline by ammonia, a chloroform solution of dithizone is added, and the mixture is shaken and let stand a minute to separate. If zinc is present it combines with the dithizone in chloroform and colors it red. The intensity of color is proportional to the amount of zinc, which may conveniently be 0.001 to 0.020 mg. The amount of zinc may be also measured by a titration procedure.

THE speed, convenience, high sensitivity, simplicity, cheapness, and ease of performance of the dithizone method for zinc are reasons for this presentation of this method, not yet entirely perfected although readily usable. The spectrograph or the polarigraph, both expensive and requiring experience for successful operation, are the only other means for detection and estimation of the small amounts of zinc for which the dithizone method is especially suitable. Recent recognition of the importance of zinc in plant, and perhaps also animal, nutrition has created a demand for a simple means for estimating the small amounts of this metal almost universally present in everything about us.

Dithizone, diphenylthiocarbazone, forms colored complexes with many metals, as shown by Fischer (*10*) and others. Chloroform or carbon tetrachloride dissolves these colored complexes out from an alkaline or sometimes acid aqueous solution, thus isolating the metal from other substances. The amount of the metal in the chloroform extract may be estimated by colorimetry or by titration. The dithizone method is conveniently applicable only to estimation of amounts of 0.001 to 0.100 mg. of zinc or other metal. In the technical literature 0.001 mg. is commonly expressed as one gamma, γ, and is thus designated here. This method is very well adapted to show that the amount of zinc in watery solutions or in reagents does not exceed a certain very small amount—for example, it is used to test the culture solutions used for growing plants in a zinc-free medium. In a few minutes a sample of distilled water may be tested and found to contain not over 0.005 p. p. m. of zinc. Likewise salts such as potassium nitrate, magnesium sulfate, and calcium hydrogen phosphate may be easily and quickly tested.

The dithizone method is not offered as a complete substitute for or as equivalent to the spectrograph or the polarigraph for estimating small amounts of zinc in solutions containing other heavy metals, but lacking those instruments of precision it is capable of giving fairly reliable results at a minimum expense of time, money, and laboratory equipment. Though it may not be considered a precision method, it is doubtful whether much more precise results are obtainable by any other known method for estimating such small quantities of zinc.

The great advantages of the method are its speed, simplicity, and inexpensiveness. A disadvantage is that it is

not specific for zinc when several other metals are present. However, good methods of separation are available.

The chemistry of the dithizone metal complexes is discussed by Fischer (*5*, *8*), White (*16*), and others. The details of procedure have been worked out by the writer, aided by suggestions from the work of Fischer (*5*, *8*), Winter, Robinson, et al. (*20*), Winkler (*19*), Wilkins, Willoughby, et al. (*17*), Heller, Kuhla, and Machek (*12*), and others. The methods described in a previous paper (*14*) by the writer have a sensitivity about one-tenth that of the method here described.

A dithizone method described by Deckert (*4*) was not found satisfactory. So far as is known to the writer, no published dithizone method for estimation of these micro amounts of zinc is very good.

Preparation of Solutions of Analysis

Organic substances, vegetable or animal, in general may be burned, preferably below red heat, and the ash extracted with dilute hydrochloric or sulfuric acid. If the material is difficult to burn white, or has an easily fusible ash, addition of a little magnesium nitrate before burning is helpful. Combustion by wet methods with nitric or perchloric acids is likely to cause loss of zinc by volatilization; moreover, the oxidizing agent must be entirely removed (which may not be easy) before the dithizone test is applicable to the solution. Hydrogen peroxide may be used to remove small amounts of interfering organic matter, but the excess hydrogen peroxide must be entirely removed. In many cases a small amount of organic matter in the solution does not interfere seriously in applying the dithizone test for zinc. Solutions of water-soluble salts require no further preparation. If the solution contains Ca^{++}, Fe^{+++}, PO_4^{---}, or other ions which produce precipitates when the solution is made alkaline with ammonia, ammonium citrate should be added to prevent this precipitation. Solutions of alloys which cannot be prevented from precipitating when ammonia is added cannot well be tested directly by the dithizone method.

Precautions and Preliminary Tests

Since small amounts of zinc are present in nearly every material about us in everyday life, great care is necessary to avoid introducing it from some other source into the material to be tested. Most mineral salts contain zinc, sometimes as much as several parts per million. Organic reagents such as acetic or citric acids may have still more, while others are nearly zinc-free. Distilled water, as well as ordinary water as it comes from service pipes, contains some zinc. All kinds of rubber so far examined contain zinc. Everything used in the analytical operations of testing for zinc should be tested before it is used. A blank test should be frequently made on all materials used. It is ordinarily simpler to apply a correction for the amount of zinc found in the blank test than to try to obtain and use zinc-free reagents. The amount of this correction should be minimized by using reagents and apparatus as nearly as possible free of zinc.

Reagents

1. Dithizone (diphenylthiocarbazone). Fifteen milligrams in 100 cc. of chloroform. Other proportions optional. The usual (Eastman) commercial reagent is not always found satisfactory. It may be purified as described by Clifford and Wichmann (*3*), Wilkins et al. (*17*), or Winkler (*19*).

2. Chloroform. Ordinary U. S. P. grade is found suitable. It should dissolve dithizone easily, and produce a dark green solution. When greatly diluted, the dithizone solution must still have the same green tint, not soon changing to yellow which would indicate presence of some oxidizing agent that makes it useless. Impure or used chloroform may be recovered by distillation. A small amount of sodium thiosulfate with very little sodium hydroxide dissolved in water is added to the flask containing the chloroform before distilling. No previous washing is necessary. For good purification it is again distilled with a similar cover of water containing sodium thiosulfate. The water in the distillate is separated by freezing it out in a refrigerator.

Another method was proposed by Biddle (*1*), who washed the impure chloroform with sulfuric acid and distilled over lime.

3. Ammonia, free of zinc. The usual strong reagent, specific gravity 0.9, is diluted with water, 1 to 4, or to other desired concentration.

4. Water, free of zinc. Best obtained by distilling ordinary distilled water from a Pyrex apparatus fitted with an efficient spray trap. The distilling flask should be frequently cleaned out, so that there will be little accumulation of zinc or other metals in it. A less effective method for preparing zinc-free water consists in extracting zinc and other metals from it by shaking out with chloroform and dithizone repeatedly, until no more zinc is removed.

5. Ammonium Citrate, free of zinc. A 10 per cent solution of citric acid is made alkaline with ammonia and repeatedly shaken out with dithizone and chloroform until no more zinc is extracted.

6. Hydrochloric Acid, as nearly free of zinc as possible. This cannot be freed of zinc by distillation, as the zinc passes over with the acid at ordinary pressure. Nearly zinc-free acid may be prepared by slowly running ordinary c. p. hydrochloric acid into concentrated sulfuric acid, and absorbing the hydrochloric acid gas in pure water. No heat is required.

Apparatus

No unusual apparatus is needed. The most used are conical separatory funnels of 60-, 125-, and 500-cc. capacity with well-fitting stoppers and stopcocks, preferably of Pyrex glass. A glass containing zinc (Jena or other) is not permissible. No grease or lubricant other than water is used on stopcocks. All brass, copper, or zinc apparatus should be avoided. It is easy to introduce enough zinc from the fingers to ruin results after handling a brass stopcock. The small quantities (5 to 10 cc.) of chloroform constantly required are most conveniently delivered from a 200-cc. separatory funnel with a very short stem.

A supply of small (15 to 20 cc.) shell vials or sample tubes with flat clear bottoms is most convenient for containing the pink chloroform-dithizone-zinc extracts till the analyst is ready to make color readings on them. These tubes should be closed with good smooth corks, never with rubber stoppers.

For titrations of zinc dithizone solutions with bromine, glass-stoppered 60-cc. narrow-mouthed bottles are most convenient. Burets of 5-cc. capacity divided in 0.05 cc. are used for measuring the titrating solutions.

Extracting Zinc from Solution by Dithizone

Place the solution in a conical separatory funnel large enough to hold as much more as the volume of the solution and add dilute ammonia till alkaline. If a precipitate is produced, add hydrochloric acid till it dissolves, then 1 to 2 cc. of reagent 5, and again make the solution alkaline with ammonia. It must remain clear. Add several drops of reagent 1 and 5 cc. of chloroform, and shake somewhat vigorously for a few seconds. Let stand a minute to separate. In the absence of zinc or other heavy metal the chloroform remains green, and the water is brownish yellow from dithizone dissolved in the alkaline solution, except that if the solution contains much ammonium salts the excess dithizone produces very little color in it. If zinc is present the chloroform is colored some shade of red, the more zinc the redder. Add more dithizone, again shake the mixture, and repeat this treatment until the chloroform becomes purplish or bluish from excess dithizone and the watery layer is yellow from the excess dithizone except in presence of much ammonium salts. Other metals if present may modify the color of the chloroform. When it is judged that excess dithizone is present, draw off the chloroform layer into another separatory funnel, add more chloroform and dithizone to the watery mixture in the first separatory funnel, shake out again, and draw off the chloroform layer into the second separatory funnel. This second extract should be green, or only slightly reddish, indicating that practically all the zinc was obtained in the first extraction. In this process amounts of dithizone, chloroform, water, and ammonia may vary considerably without much effect on the final result, provided that excess of dithizone is used so that all zinc is extracted. The second separatory funnel contains the zinc-dithizone complex with an excess of dithizone, which is removed by shaking out two or three times with three times its volume of slightly ammoniacal

water, about 0.02 N. Very strong ammonia decomposes the red zinc complex and causes low results. Each time after the chloroform settles the watery layer is siphoned off, more water is added, and it is shaken again. Only 5 to 10 seconds of vigorous shaking is necessary each time to produce adequate washing. When the watery layer is colorless and the chloroform is some shade of red, washing is sufficient. If copper or some other metal that reacts other than zinc is present, the chloroform may have some other color than the bluish red of pure zinc alone. The chloroform is now drawn off into a suitable container for estimation of the zinc, as described below. The red complex of zinc dithizone is so nearly insoluble in the ammoniacal wash water that it is scarcely possible to detect any loss of zinc in the normal washing process, which is necessary to remove the excess dithizone so that the chloroform remains pink or red, not modified by uncombined dithizone. Excessive washing tends toward low results.

The effects of variations in washing and some other variations in treatment were as given in Table I. For each test 10γ of zinc were taken, and usually about 10 cc. of chloroform were used. For each washing 20 to 30 cc. of 0.02 N ammonia were used, and the mixture was shaken vigorously about 5 seconds, then let stand a few minutes till the aqueous layer was nearly clear. This was siphoned off and the washing repeated.

Table I. Effects of Variations

	No. of Washings	Zinc Found
	3	10.0
	3	10.0
	6	10.0
	6	8.9
With large excess of dithizone	3	11.0
	6	10.8
Washed with water only	3	10.0
	3	10.0
With 7 cc. of chloroform	5	10.3
With 20 cc. of chloroform	5	7.7
With 20 cc. of chloroform	3	10.0

Measurement of Zinc in Chloroform Extract

The amount of zinc in the red chloroform-dithizone extract is proportional to the intensity of color for amounts of 0 to 10γ of zinc. Much larger amounts of zinc are difficult to compare. Carbon tetrachloride acts like chloroform, except that the color is about one-fifth less in tetrachloride. The color may be measured by any of the usual colorimetric methods. However, this tint of red is difficult to compare. The standard cup may contain 10γ of zinc, or for very small amounts of zinc 5γ of zinc are better. A blue light filter in the eyepiece of the comparator produces a tint easier to compare.

Since the solutions of the unknown are frequently not clear and are sometimes off color for various reasons, it is often difficult to make an accurate measure of the amount of zinc by means of the usual comparator. A good approximation may be made by matching the unknown against known amounts prepared in the same manner, using smaller flat-bottomed tubes similar to Nessler tubes. Because the color fades and changes tint somewhat with time, it is necessary to prepare the standard comparison tubes, containing known amounts of zinc, anew every day or two. For ordinary use a set of tubes containing 1, 2, 4, 6, and 10γ of zinc in 10 cc. is satisfactory. Rough estimates may be made by comparing with pieces of pink Cellophane which have been calibrated against known amounts of zinc. A number of dyes and colored solutions were tried as color standards. The only one found which closely matches the zinc-dithizone color and has any permanence in water solutions is Amaranth 107, of the National Aniline and Chemical Company, which does very well for amounts up to 5γ of zinc in 10 cc. But no watery solution can match closely the appearance of the zinc-dithizone complex in chloroform because of the great difference in density and refractive index of water and chloroform. No colored glass which nearly matches the color has been found.

Measurement by Titration with Bromine

Several oxidizing agents destroy the red color of zinc-dithizone in chloroform, probably by breaking some bond in the dithizone molecule. A solution of bromine in carbon tetrachloride of such strength that 1 cc. equals about 10γ of zinc has been found very good for estimating amounts of zinc from 5 to 30γ. The solution has a pale yellow color similar to that produced by 2 drops of methyl orange in 50 cc. of alkaline solution. It is prepared by dissolving bromine in carbon tetrachloride and determining its strength relative to zinc by titrating against known amounts of zinc which have been separated by dithizone as above described. This bromine solution is nearly equal in strength to 0.001 N thiosulfate. A solution of bromine in chloroform changes in strength so rapidly that it is not reliable after several hours; therefore carbon tetrachloride is used. The chloroform solution of dithizone and zinc to be titrated is placed in a 60-cc. glass-stoppered narrow-mouthed bottle, and the bromine solution is added slowly with frequent vigorous shaking of the bottle until the red color fades to colorless, or yellowish when much zinc is present. The end point is not distinct; therefore some excess of bromine is added, and after a minute about 1 cc. of 20 per cent potassium iodide in water followed by a little starch solution and 5 cc. of water containing 1 per cent sodium bicarbonate. The excess bromine liberates iodine which is titrated to colorless with 0.001 N thiosulfate. This method is applicable to amounts of zinc from 3 to 30γ; for smaller amounts the color comparison method is better.

Difficulties

Some of the difficulties likely to be met are lack of a more positive and exact means for measuring the minute amounts of zinc (this lack is common to other methods for measuring such small amounts); presence of lead, copper, or other metals, which if not removed may be estimated as zinc; formation of emulsions difficult to separate; presence of solids which tend to occlude zinc during the extraction process; formation of precipitates, which occlude zinc during the extraction process; and absorption of zinc by filter media.

Emulsions. Emulsions are likely to form during shaking of chloroform with watery solutions, especially if some organic matter or finely divided solid such as clay is present. The extraction and washing of the chloroform extract are carried out as usual until the excess dithizone is removed, and then the emulsion is run slowly through a tube closed at one end by a piece of bolting silk or other firm fine-meshed fabric. This breaks up the emulsion, which is then returned to the separatory funnel to separate the water from the chloroform. Formation of emulsions is minimized by avoiding violent shaking. In many cases the emulsion is most easily broken by addition of more chloroform, after removal of the separated water and gentle mixing, so that water and chloroform in the emulsion separate.

Precipitates. Another difficulty which is likely to cause low results in estimation of zinc by the dithizone method is caused by any substance in the solution which produces a precipitate when the solution is made alkaline. The most common are Fe^{+++}, Ca^{++}, and PO_4^{---}. Addition of 1 to 2 cc. of a 10 per cent solution of ammonium citrate usually prevents formation of a precipitate and permits complete extraction of the zinc. Insoluble solid matter such as clay may be precipitated under the conditions of the dithizone test and carry with it some of the zinc. The only known remedy for this is removal of the solid matter by sedimentation or centrifuging before making the test.

Absorption by Filter Media. No sort of filter has been

found suitable for filtering out solid matter. Filter paper or pulp, absorbent cotton, asbestos, and apparently any kind of porous absorbent material take up small amounts of zinc from a solution passing through them. Subsequent extraction of the filter with dilute acid removes part of the zinc. If the same filter is used repeatedly, it may absorb zinc from one solution and permit some of the absorbed zinc to go into the next solution. When the solution contains only 1 to 2γ of zinc, the whole of it may be retained, by the filter, so that no zinc is detectable in the filtrate. Since the acid used to extract the zinc from the filter is itself not free of zinc, a correction must be made for it, and since the correction may sometimes be larger than the zinc in the sample, the corrected result is of uncertain value. This difficulty is avoided by sedimentation or centrifuging instead of filtering out solid matter.

For means of avoiding difficulty due to oxidation of dithizone by F^{+++} by use of hydroxylamine, see Wilkins et al. (*17*).

In all cases where volumes of 200 cc. or more of water and considerable amounts of reagents which are not zinc-free must be used in a determination of a few gammas of zinc in a sample, the result found may be in error to the extent of 10 to 50 per cent. The only remedy for this difficulty is to use zinc-free reagents.

Interference by Other Metals

Some 15 to 20 metal ions are extracted from slightly alkaline water solutions by a chloroform solution of dithizone. The same reagents extracts several of them from more or less acid solutions, so that by appropriate regulation of pH and by addition of some other reagent it is possible to isolate most of them. Before undertaking such separations one should look over the papers by Fischer and collaborators (*7, 8, 16*). Fischer has described procedures for many separations.

The scheme for separations shown in Table II is based on Fischer's statements, with some suggestions from others. Great excess of one metal may hinder or prevent complete separations.

Mn, unless present in large amounts, is separated along with Fe^{+++} by the same treatment.

A satisfactory separation of Zn from Co and Ni by means of dithizone seems yet to be unknown.

Fe^{++} and Sn^{++} are rendered inactive by changing to the higher state of oxidation. Bi is separated from Cu by addition of tartaric acid.

For more precise description of separations see: for silver, Fischer et al. (*11*); mercury, Winkler (*19*) and Fischer (*6*); lead, Clifford and Wichmann (*3*); zinc, Fischer and Leopoldi (*10*); bismuth, Willoughby and associates (*18*); copper, Fischer and Leopoldi (*9*); by polarigraph, Heller, Kuhla, and Machek (*12*); separations in general, Fischer (*8*), and White (*16*). The dithizone method for lead has been thoroughly studied in a model way by Clifford and Wichmann (*3*). White (*16*) gives an informative article on "Dithizone as an Analytical Reagent" with a bibliograpy of about 40 references.

Zinc along with other metals extracted by the dithizone method may be estimated by means of the polarigraph of Heyrovsky (*13*) without separation of the other metals if they do not greatly exceed the zinc in amount. The procedure is described by Heller, Kuhla, and Machek (*12*). This is perhaps the neatest available method for estimating zinc in presence of lead, copper, and several other metals.

Table II. Scheme for Separations

pH of Aqueous Solution	Metal Ions Extracted by Dithizone in Chloroform
Less than 2	Nobel metals plus Hg
2 to 3	Cu, Bi, Sn^{++}
4 to 7	Zn, Cd, Pb, Tl, and all the above
7 to 10	All the above. Washing with 0.04 *N* ammonia removes Sn^{++}. Addition of KCN leaves only Pb, Tl, or Bi if not previously removed
Above 11	Cd remains, Zn is removed

Effect of pH on Partition of Zinc

Fischer (*10*) implies that zinc is completely extracted from an acetate solution at pH 4 by dithizone in carbon tetrachloride, thus making possible its separation from lead. The writer has not been able to verify this. Instead there is a partition of the zinc between the aqueous and the chloroform or carbon tetrachloride, the amount in each solution depending on the pH of the aqueous solution. Fischer used carbon tetrachloride which permits a better, though not complete, separation of lead and zinc than chloroform. With chloroform as solvent lead begins to be extracted at about pH 5 and is completely separated at pH 7. Portions of 10 gammas each of zinc in water were extracted by chloroform dithizone with following results: At pH 3, 0; pH 4, 1; pH 5, 4; pH 6, 7; pH 7 to 10, 10; pH 11, 2.5γ. So it appears that zinc and lead overlap and are therefore not separable at any certain pH. A simple and exact method depending on the use of potassium thiocyanate has been worked out as follows:

Separation of Zinc from Lead

Make the solution alkaline with ammonia and extract with dithizone in chloroform as usual. After washing out the excess dithizone, add 2 cc. of a 5 per cent water solution of potassium thiocyanate, shake, and separate. The lead remains in the chloroform, which is washed with a little water and separated. Add the wash to the aqueous solution of potassium thiocyanate which now contains the zinc. Run this into a dish, acidify with hydrochloric acid, and evaporate to dryness on the steam bath to remove CN^-. Add to the dry residue 1 to 2 cc. of *N* hydrochloric acid and water enough to cover it all, and heat a few minutes. Cool and test the solution for zinc with dithizone as usual.

Table III. Separation of Zinc from Lead

Amounts Taken Pb	Amounts Taken Zn	Found[a] Zn
γ	γ	γ
50	0	3
10	2	1.4
10	10	9.8
50	0	3.1
10	2	2.6
10	10	9.6

[a] The blank on reagents was so small that no correction for it was made.

Separation of Zinc and Copper

First, extract from the solution both zinc and copper by the usual dithizone procedure as if only zinc were present, and wash out most of the excess with 0.02 *N* ammonia as usual. This separation removes the zinc and copper from iron, calcium, and other substances which might later interfere.

Second, shake out the dithizone-chloroform solution of zinc and copper with about 5 cc. of 0.5 *N* hydrochloric acid. Draw off the chloroform layer into another separatory funnel. Wash the acid with a little chloroform and add this to the other chloroform solution. Shake this out with another 5 cc. of 0.5 *N* hydrochloric acid. Now draw off the chloroform layer, which contains the copper, and add the acid solution to the first acid extract. This solution contains the zinc, which may be separated by the usual dithizone procedure. The chloroform extract contains the copper with excess dithizone which may be removed by washing with 0.02 *N* ammonia. The copper in the purified extract may be estimated by the same methods used for zinc or by McFarlane's method (*15*).

This separation is not exact. A trace of zinc seems to remain with the copper and a little copper with the zinc. No means of making it more exact was found.

A less exact separation may be made in absence of iron, etc., by bringing the solution to pH 3, then adding 2 cc. of sodium acetate (25 per cent solution in water) of pH 3 and shaking out 3 or 4 times successively with dithizone in chloroform which removes the copper, leaving the zinc in the aqueous solution.

Corrections for blank in reagents were made on all these separations. More exact results could be obtained if purer reagents were available.

Accuracy and Reproducibility of Results. The accuracy of results is of the same order as that of ordinary

Table IV. Separation of Zinc and Copper

Amount Taken Cu γ	Amount Taken Zn γ	Found Zn γ	
0	10	9.7	
10	10	9.7	
50	0	0	After correction for blank
0	0	2.0	Blank on reagents
50	10	9.0	
10	5	5.4	
10	2	2.2	
10	10	9.8	
Plant ash extract = 1 gram of original material	15.2, 15.8	Also contains about 10γ of Cu	
HCl extract of soil = 0.06 gram of original material	28, 29, 29, 31	Contains much Fe, Al, Ca, etc., and about 40γ of Cu	
Same plus 10γ of Zn, corrected for added Zn	24, 26		

Table V. Zinc Found by Bromine Titration Method

	Zn Found, γ
1 gram of sheep manure, water extract	19.2 20.0 20.8
Same + 10γ of zinc	28.0 − 10 = 18.0 30.4 − 10 = 20.4
1 gram of chicken manure, water extract	21.6
Same + 10γ of zinc	31.2 − 10 = 21.2
1 gram of cow manure, water extract	16 16 16
Same + 10γ of zinc	25 − 10 = 15 25 − 10 = 15

Table VI. Zinc Extracted from Soils by Various Reagents

Soil No.	Water (1:5)	CO_2 water (1:10)	HCl to pH 5 (1:10)	1 N HCl (1:2)	Total by Fusion[a]
		P. p. m. in air-dry soil			
1	0.21	0.42	3.9	200	326
59	0.11	0.20 0.25	0.51 0.60	17	24
80	0.05 0.02	0.00 0.03	0.20 0.25	13 15	22
89 (contains $CaCO_3$	0.02 0.01	0.00 0.00	0.06 0.12	6	46
112	..	0.02 0.03	0.00 0.05	5	26
127	0.02	0.02	0.04 0.02	3	192
103	0.01 0.05	0.05 0.03	0.06 0.07	4 6	20

[a] Total zinc found by the fusion method described by Boggs and Alben (2).

colorimetric work, 5 to 10 per cent, limited by the accuracy of the instruments used in making the comparisons. In absence of interfering substances, results are reproducible as nearly as can be estimated by the eye. It may be that greater precision would be attainable by use of a suitable photoelectric color comparator.

The bromine titration method, not sensitive enough for less than 3γ of zinc, usually is reproducible within 5 to 10 per cent on amounts of 5 to 20γ of zinc.

Tables V and VI show the amounts of zinc found in some manures and soils and indicate something in regard to reproducibility of results. Certain discrepancies in the figures given are attributed to impurities in reagents, to faulty technic, and to the very small amounts of zinc extracted in many cases. Other results indicating the reliability of the methods are presented above.

Summary

A simple, convenient, quickly performed dithizone test for estimating amounts of zinc of 0.001 to 0.100 mg. is described. The method is not well adapted to measurement of amounts much greater than 0.1 mg.

Qualitatively the dithizone test for zinc is probably the most sensitive known. After isolation of the zinc by means of dithizone, the amount of zinc in the red-colored chloroform extract may be measured by color comparison or by titration with bromine. Means are discussed for overcoming several difficulties which may appear.

Many other metals besides zinc produce colored complexes with dithizone. By means of suitable solvents, the use of which is described, zinc is separated from other metals which are most likely to interfere in estimation of the zinc.

Literature Cited

(1) Biddle, D. A., Ind. Eng. Chem., Anal. Ed., **8**, 79 (1936).
(2) Boggs, H. M., and Alben, A. O., *Ibid.*, **8**, 97–9 (1936).
(3) Clifford and Wichmann, *J. Assoc. Official Agr. Chem.*, **19**, 130 (1936).
(4) Deckert, W., *Z. anal. Chem.*, **100**, 385 (1935).
(5) Fischer, H., *Wiss. Veröffent. Siemens-Konzern*, **4**, 158 (1926).
(6) Fischer, H., *Z. anal. Chem.*, **103**, 241 (1935).
(7) Fischer, H., *Z. angew Chem.*, **47**, 65 (1934).
(8) *Ibid.*, **47**, 685 (1934).
(9) Fischer and Leopoldi, *Ibid.*, **47**, 90 (1934).
(10) Fischer and Leopoldi, *Z. anal. Chem.*, **97**, 385 (1934).
(11) Fischer, Leopoldi, and Uslar, *Ibid.*, **101**, 1 (1935).
(12) Heller, K., Kuhla, G., and Machek, F., *Mikrochemie*, **18**, 193 (1935).
(13) Heyrovsky, J. J., *Ibid.*, **12**, 26–64 (1932).
(14) Hibbard, P. L., Ind. Eng. Chem., Anal. Ed., **6**, 423–5 (1934).
(15) McFarlane, W. D., *Biochem. J.*, **26** (1), 1022–23 (1932).
(16) White, W. E., *J. Chem. Education*, **13**, 369 (1936).
(17) Wilkins, E. S., Jr., Willoughby, C. E., Kraemer, E. O., and Smith, F. L., 2nd, Ind. Eng. Chem., Anal. Ed., **7**, 33 (1935).
(18) Willoughby et al., *Ibid.* **7**, 285 (1935).
(19) Winkler, W. O., *J. Assoc. Official. Agr. Chem.*, **18**, 638–44 (1935).
(20) Winter, O. B., Robinson, H. M., Lamb, F. W., and Miller, E. J., Ind. Eng. Chem., Anal. Ed., **7**, 265 (1935).

Received July 3, 1936.

Courtesy, U. S. Bureau of Mines

Ignition of Coal Dust in Test

Refractometric Determination of Fat in Chocolate

JOSEPH STANLEY, W. A. Cleary Corporation, New Brunswick, N. J.

A rapid refractive method for determining total fat in chocolate has been devised. A refractometer of the Abbé or butyro type is used in conjunction with tricresyl phosphate, dibutyl phthalate, or diethyl phthalate as solvent. The method should prove especially useful to chocolate plants for control purposes. The results obtained check the official extraction method satisfactorily.

THE fat content of chocolate is an important factor in the cacao industry, and particularly in the manufacture of coatings has a great bearing on the properties of the chocolate. It became even more important with the introduction of vegetable lecithin in the chocolate industry. As is well known, a few tenths of a per cent of vegetable lecithin can thin down a chocolate coating to an extent equivalent to the addition of some 5 per cent of cocoa butter. The two prime factors in chocolate technology are therefore fat content and viscosity, which are standardized and controlled for each coating in all modern chocolate plants. The viscosity of the melted chocolate is rapidly ascertained by means of the MacMichael viscometer, but unfortunately no equally rapid and accurate method has been available for determining the fat content.

In the plant the fat content and viscosity must be determined while the batch is running, and adjustments made with the cocoa butter and lecithin to conform to established standards. It is clear, therefore, that a rapid method for fat is most essential in the chocolate industry. Viscosity (*16*), fat content, and lecithin content are so closely interrelated that a rational discussion of one must include the other two also (Table I).

TABLE I. INTERRELATIONSHIP OF FAT, LECITHIN, AND VISCOSITY

	Fat, %	MacMichael Viscosity
Heavy chocolate	33.80	1360
Same chocolate, with 4 per cent of cocoa butter	37.80	213
Same chocolate, with 0.25 per cent of lecithin	33.80	205

This investigation was undertaken to devise a rapid and safe refractometric method for the determination of fat in chocolate. A number of the newer solvents were investigated and finally tricresyl phosphate, dibutyl phthalate, and diethyl phthalate were chosen as most satisfactory.

The official method of the Association of Official Agricultural Chemists (*2*) for fat in cacao products is satisfactory, but is much too long for control purposes and requires extensive apparatus and skilled personnel for its proper execution. To get around these disadvantages some use a centrifugal method which in the hands of experienced operators has been found to yield good results. (This centrifugal method is used in a number of plants, but to the writer's knowledge it has never been published in detail.) It consists in mixing a weighed portion of sample with petroleum ether in a weighed centrifuge tube and centrifuging. The solvent is decanted, and the extraction and centrifuging are repeated twice. The residue is then dried at 40° to 50° C. for 30 minutes, and weighed, the loss in weight being calculated to fat. A good densimetric method was invented by Harris (*8*), involving the use of an adjusted proprietary solvent (largely *o*-dichlorobenzene) as the extractant. The sample is extracted with the solvent and filtered, and the density of the filtrate is ascertained with a hydrometer which reads directly in percentage of fat. The refractive method described in this paper is faster and more accurate than either the centrifugal or the densimetric method referred to previously.

Chiefly on account of their speed and convenience, refractive methods are coming to the fore. We find them in use for the determination not only of fat, but of total solids in liquid eggs (*1, 3*) and even of hygroscopic moisture in seeds, using glycerol as the solvent (*15*). The author has developed a rapid refractometric method for the determination of sucrose, lactose, and dextrose in chocolate to be published later.

One of the earliest to do work in this field was Richter (*13*), who used a mixture of ethyl ether and ethyl alcohol as the solvent. Hasse and Bake (*9*) used a mixture of ethyl ether and ethyl acetate as the solvent. The chief disadvantages of these methods are the expense and volatility of the solvents used. Wesson (*14*) succeeded in partially overcoming the disadvantage of volatility by using as the solvent a technical grade of monochloronaphthalene commonly known as Halowax. But Halowax is far from a perfect solvent for this purpose. It has an obnoxious and persistent odor, and it irritates the skin. Operators who have to use Halowax continually complain that it acts somewhat as an asphyxiant. In spite of these disadvantages and its high price, it has found some use as a solvent for the refractometric (*4, 5*) determination of oil in oil-bearing materials.

Leithe (*11, 12*) has done considerable work on the refractometric analysis of cacao products. For the fat determination he uses a specially manufactured petroleum ether (b. p. 90–100° C.) as the solvent, and the immersion refractometer. For control purposes the use of so volatile and inflammable a solvent as petroleum ether and the immersion refractometer is considered impractical. A prolonged period of extraction will extract all the fat, but cacao beans and cocoa shells generally require some sort of heat treatment (*10*). A rapid refractometric fat test must therefore preferably involve heating with the solvent, and for this purpose the solvent must be practically involatile and noninflammable. More recently Demkovskiĭ (*6*) suggested the use of chlorobenzene as a refractometric extractant. This solvent is rejected on account of its volatility. At about the same time Ermakov (*7*) recommended the use of α-bromonaphthalene for the same purpose. But this solvent is the bromine homolog of Halowax and was condemned *a fortiori* for similar reasons.

Refraction of Solvents

A solvent suitable for this purpose should first of all have an index of refraction differing from that of cocoa butter to an extent consistent with accuracy—that is, it should differ sufficiently in index to allow duplicate tests to check one another within 0.1 per cent. Such a solvent should be as cheap as possible. In addition, it must be a good solvent for cocoa butter, odorless, noninflammable, and easily secured. Moreover, it must not affect the operator's health, and must have a very high boiling point and low viscosity. Different batches of solvent should not differ materi-

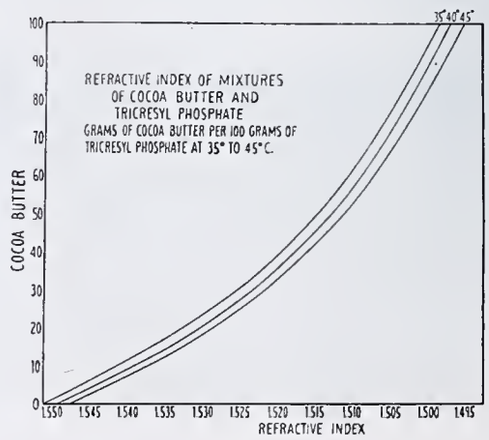

FIGURE 1

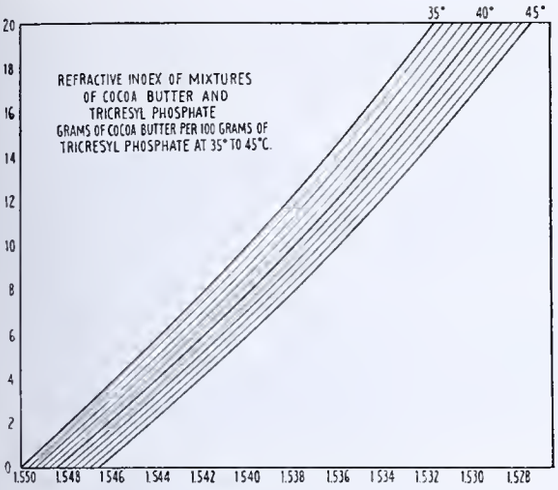

FIGURE 2

lly in index of refraction, so that a single graph can be used permanently. These specifications are met by tricresyl phosphate, diethyl phthalate, and dibutyl phthalate (furnished by the American-British Chemical Supply Co., Inc., 180 Madison Ave., New York, N. Y.). The tricresyl phosphate used was the C grade, which consists of a mixture of the meta and para isomers practically free from the ortho. As the meta and para isomers of tricresyl phosphate present in grade C have the same density and index of refraction, this mixture may be regarded as a single entity as far as this test is concerned.

The indices of refraction at 40° C. of the fats encountered in the chocolate industry are: cacao fat 1.4573; butter fat 1.4547; and coconut oil 1.4484. From these indices it is seen that the presence of butter fat in milk chocolates (which might run as high as 20 per cent of the total fat) does not influence the accuracy of the refractometric method. The presence of coconut oil would give high results. Very occasionally one may come across a sample containing coconut oil to which this refractive method is inapplicable, but for the general run of chocolates, and especially for control purposes, the probable presence of coconut oil need give us little concern.

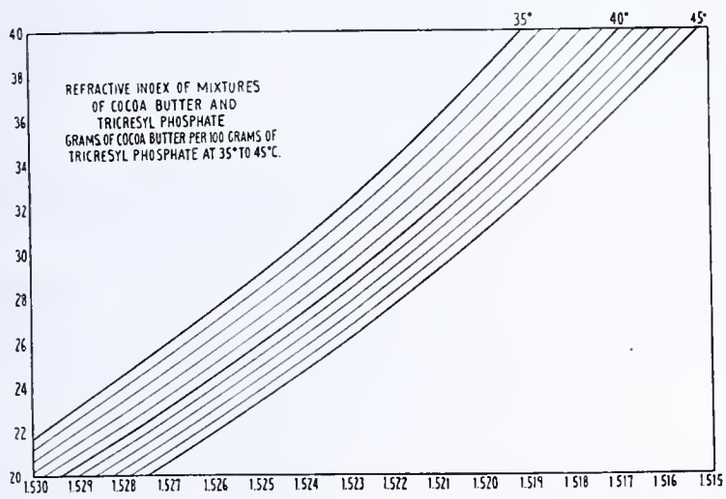

FIGURE 3

The index of refraction and boiling point of the above solvents are as follows:

Solvent	Index of Refraction at 40° C.	Boiling Point, 760 Mm. ° C.
Tricresyl phosphate	1.5486	420
Dibutyl phthalate	1.4855	340
Diethyl phthalate	1.4948	295

It was considered advisable to work with the phthalates as well, since these can be used with the narrow-range butyro-refractometer. The dispersion of the ordinary butyro-refractometer is not corrected for the phthalates with the same exactness as it is for oils, but by using twice the sample as indicated in Figures 7 and 8 this difficulty can be reduced to a minimum. In the case of tricresyl phosphate an equal weight of sample and solvent is satisfactory, since not only can the dispersion be corrected by means of the Amici prisms, but the refraction of tricresyl phosphate is higher than either phthalate.

To facilitate the use of this method in the plant it was decided to do away with the analytical balance, by using a large sample weighed on a rough balance sensitive to 0.05 gram. In addition the chocolate and solvent are warmed together and stirred, producing a perfectly homogeneous mixture. The tests were always carried out using at least 10 grams of chocolate and 10 grams of either phthalate. If the balance used is not of suitable accuracy, twice the above quantities can be used. Using the above weights of solvent, the loss due to warming can be neglected. For tricresyl phosphate a digestion temperature as high as 75° C. can be used, whereas for the phthalates the temperature should not exceed 50° C. In fact, it was found that the digestion with tricresyl phosphate can be left overnight in an oven at 100° C. without loss in weight exceeding a few milligrams, which is entirely negligible. As the digestion period used in the analysis is 10 to 15 minutes, no difficulty can arise from this point. The temperature used is also limited by the nature of the sample examined—for example, milk chocolates should not be heated beyond 40° C. but dark chocolates can be heated higher, say to 75° C. The reason for this is that milk chocolates tend to coagulate and subsequently filter slowly.

Graphs and Tables

In constructing the curves for tricresyl phosphate, known mixtures of cocoa butter and solvent were weighed out on the analytical balance, and refracted at 35° to 40° C., using a Valentine refractometer reading to five decimal places. For this purpose the Abbé refractometer can be used with equal accuracy, despite the fact that it reads to four decimal places only.

Table II was constructed using filtered pure prime pressed cocoa butter. The figures in the first column show grams of cocoa butter per 10 grams of tricresyl phosphate. The figures of Table II were plotted in Figure 1 on a small scale, and in Figures 2 to 4, inclusive, on a large scale, interpolating between 35° and 45° in degree intervals. (Large-sized graphs are available from the American Lecithin Co., Elmhurst, N. Y.) Thus in an actual analysis, if one uses an equal weight of solvent and chocolate, the percentage of fat can be read directly from Figures 2 to 4, inclusive, provided one has ascertained the index of refraction of the filtered mixture at any temperature between 35° and 45° C.

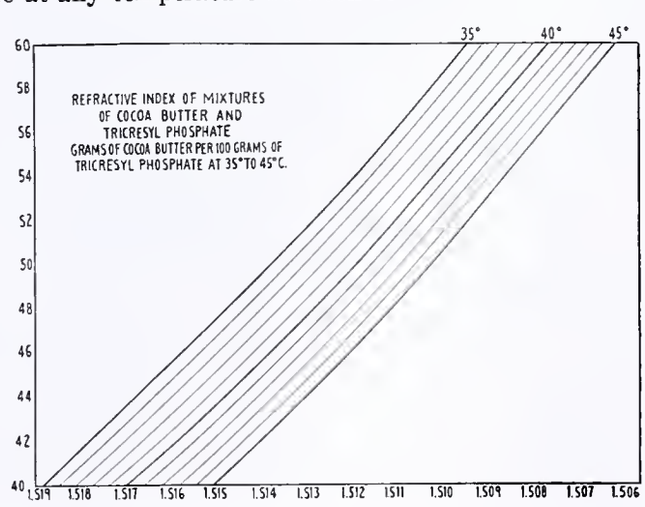

FIGURE 4

Table II. Refractive Index of Cocoa Butter and Tricresyl Phosphate

(Concentration of cocoa butter is expressed as grams of fat per 10.000 grams of solvent.)

Cocoa Butter per 10 Grams of Solvent	Refraction 35° C.	40° C.	45° C.
0.000	1.55039	1.54841	1.54659
0.250	1.54772	1.54563	1.54380
0.500	1.54498	1.54283	1.54115
0.750	1.54243	1.54031	1.54823
1.000	1.53892	1.53774	1.53593
1.250	1.53765	1.53533	1.53343
1.500	1.53547	1.53336	1.53167
1.750	1.53348	1.53150	1.52940
2.000	1.53146	1.52950	1.52700
2.250	1.52943	1.52738	1.52548
2.500	1.52774	1.52560	1.52400
2.750	1.52613	1.52445	1.52213
3.000	1.52434	1.52223	1.52049
3.250	1.52283	1.52076	1.51900
3.500	1.52148	1.51953	1.51778
3.750	1.52026	1.51814	1.51649
4.000	1.51856	1.51695	1.51524
4.250	1.51740	1.51540	1.51380
4.500	1.51649	1.51444	1.51253
4.750	1.51515	1.51307	1.51130
5.000	1.51358	1.51177	1.50997
5.250	1.51261	1.51081	1.50921
5.500	1.51185	1.50960	1.50819
5.750	1.51049	1.50906	1.50723
6.000	1.50967	1.50775	1.50619
6.500	1.50825	1.50615	1.50448
7.500	1.50495	1.50309	1.50110
8.500	1.50196	1.50014	1.49828
9.500	1.49950	1.49772	1.49570
10.000	1.49804	1.49627	1.48450

The graphs with the phthalates were constructed in a similar manner, and are shown in Figures 5 and 6. The graphs for dibutyl phthalate actually used in an analysis are shown in Figures 7 and 8. These graphs were constructed from readings taken on the butyrorefractometer at 48° C., using 2 parts of sample to 1 part of dibutyl phthalate. Under these conditions the graphs read directly in percentage of fat in sample.

In using ratios of solvent to sample other than 1 to 1 with tricresyl phosphate, or 1 to 2 with the phthalates, one should multiply whatever ratio is used by 100, divide this into the cocoa butter reading corresponding to the index of refraction, and then multiply this quotient by 100 to get the percentage of fat in the sample.

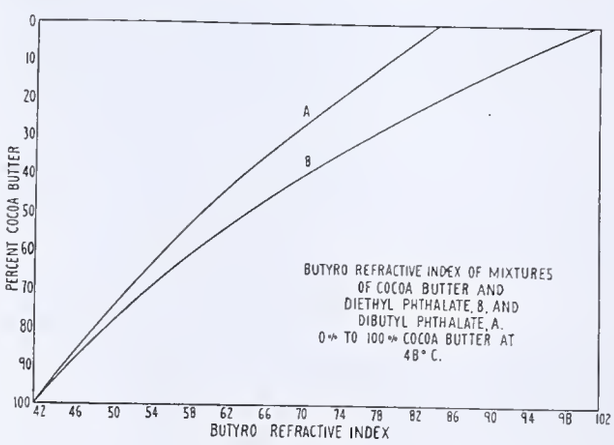

Figure 5

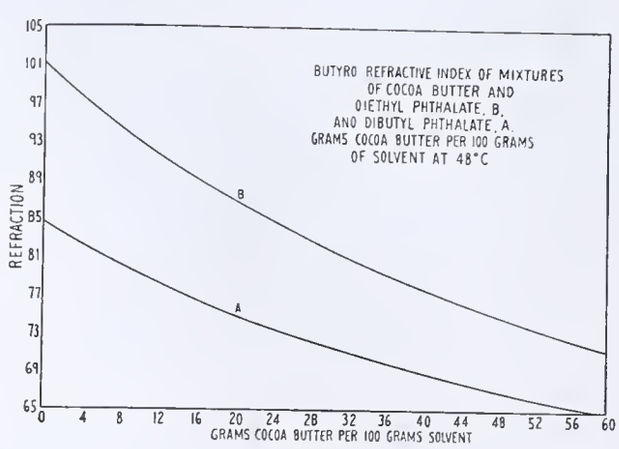

Figure 6

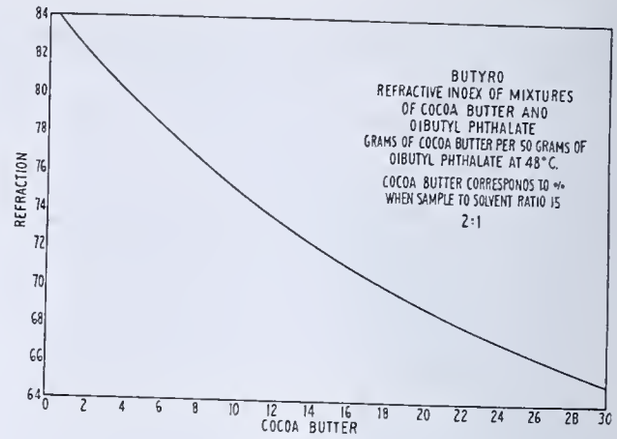

Figure 7

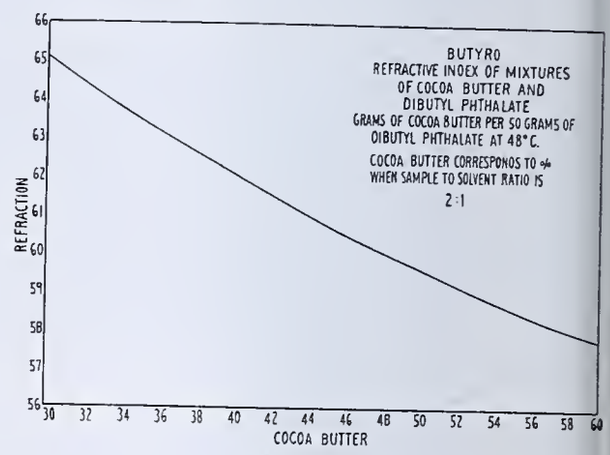

Figure 8

Method

The technic of the method using tricresyl phosphate is as follows:

Weigh 20 grams of sample in a 100-cc. low-form, lipped beaker on a balance sensitive to 0.05 gram, and then weigh in 20 grams of tricresyl phosphate. Set in a warm place until the chocolate has melted, stir thoroughly, then set again in the warm place for 10 minutes. The temperature can be as high as 75° C. but for milk chocolates it should not exceed 40° C. At the end of this time stir thoroughly and filter. The filtration is best accomplished without using a funnel, as follows: Open a 24-cm. fluted No. 1 Whatman or similar filter paper in a 100-cc. tall-form, unlipped Pyrex beaker so that the apex of the filter paper touches the bottom of the beaker. Pour the sample into the paper and set the beaker in the same warm place.

By using this technic one can obtain in a few minutes 5 to 10 cc. of filtrate, which are certainly enough for a determination of refractive index. Refract between 35° and 45° C., noting the exact temperature. Look up the percentage of fat in Figures 2 to 4, inclusive. By preference the author uses an Abbé refractometer whose temperature is controlled thermostatically at 40° C. In getting the zero point for the solvent, run a blank without, of course, using any sample, but going through the same heating period, filtration, etc. The difference between this blank reading and its supposed reading as obtained from Figure 2 constitutes the correction to be used in the analysis, and rarely exceeds a few units in the fourth decimal place. Its variation is due not only to slight differences in the composition of the solvent, but to slight shifts in the zero point of the instrument itself.

If the reader is equipped with only a butyrorefractometer, he must use dibutyl phthalate as the solvent. In this case he must add only one-half the weight of solvent, and warm the mixture of solvent and sample to a temperature not to exceed 50° C. for the digestion. He must also refract the filtrate at 48° C. in order to use the curves of Figures 7 and 8. Under the above conditions these curves read directly in percentage of fat in the samples.

In unusual cases the fat content of a sample of chocolate will cceed 60 per cent. In such cases the method can still be used, rovided one-half the usual amount of sample is taken. The ading obtained on the graph is doubled to get the percentage fat in the sample.

Lecithin in the small amounts used in chocolate products oes not interfere with the accuracy of this method.

Table III shows some results obtained by this method when mpared to the A. O. A. C. official method. The solvent sed was tricresyl phosphate.

As ordinarily used, this method gives low results with coa shells and cocoa itself. At present an investigation is nder way to discover the best grinding and digestion procedure which will give correct results for these products also.

Table III. Comparison of Refractive and Official Methods

(Using tricresyl phosphate as solvent)

Sample	Refractive Method	Official A. O. A. C. Method
	%	%
Chocolate liquor	53.54	53.20
	50.22	50.02
	51.60	51.92
Dark chocolate	39.05	39.23
	41.15	40.82
	36.88	36.93
	40.00	39.89
	37.85	38.17
	38.40	38.37
	39.00	38.80
Skim-milk chocolate	38.80	38.83
	34.80	35.22
	35.21	35.02
Whole-milk chocolate	32.75	33.09
	34.28	34.08
	26.81	27.19
Light chocolate	31.37	31.64
	33.34	33.50
Eskimo pie coating	52.35	52.06
	51.85	51.59

Acknowledgment

The author wishes to thank the American-British Chemical Supply Company for its assistance and courtesy in furnishing samples of various solvents. In addition thanks are due John Ritchie, chief chemist, Loft, Inc., and Benjamin Zenlea, chief chemist, Walter Baker and Co., for their counsel and criticism of this method. Thanks are also due to William A. Cleary, vice president, and Joseph Eichberg, president of the American Lecithin Company, Inc., who inspired and directed this research to a successful conclusion.

Literature Cited

(1) Almquist, Ind. Eng. Chem., Anal. Ed., 4, 305 (1932).
(2) Assoc. Official Agr. Chem., Official and Tentative Methods of Analysis, pp. 158 et seq., 1930.
(3) Bailey, Ind. Eng. Chem., Anal. Ed., 7, 6, 385 (1935).
(4) Coleman, D. A., and Fellows, H. C., U. S. Dept. Agr., *Dept. Bull.* **1471** (1927).
(5) Coleman, D. A., and Fellows, H. C., U. S. Dept. Agr., *Tech. Bull.* **71** (1928).
(6) Demkovskii, *Masloboino Zhirovoe Delo*, **11**, 171 (1935).
(7) Ermakov, *Ibid.*, **11**, 282 (1935).
(8) Harris, C. P., Ind. Eng. Chem., Anal. Ed., **2**, 4, 410 (1930).
(9) Hasse and Bake, *Chem.-Ztg.*, 47, 557 (1923).
(10) Intern. Assoc. Chocolate Mfrs., Brussels, Bulletin (August, 1935).
(11) Leithe, *Z. Untersuch. Lebensm.*, 67, 369, 535 (1934); **68**, 369 (1934); *Z. angew. Chem.*, 47, 734 (1934); *Chem.-Ztg.*, **59**, 325 (1935).
(12) Leithe and Miller, *Z. angew. Chem.*, **48**, 414 (1935).
(13) Richter, *Z. Untersuch. Lebensm.*, **24**, 312 (1912).
(14) Wesson, D., *Cotton Oil Press*, 4, 3, 70 (1920).
(15) Zaichenko, P., and Rekhin, B., *Masloboino Zhirovoe Delo*, **10**, 60 (1934).
(16) Zenlea, B. J., *Cocoa and Chocolate* (June, 1935).

Received June 6, 1936.

Detection of the Elements in Organic Compounds

ROBERT H. BAKER and CHARLES BARKENBUS
University of Kentucky, Lexington, Ky.

A PRELIMINARY detection of the elements is essential to the rapid identification of an organic compound d, although the sodium fusion method has been widely used, is well known that nitrogen often escapes detection.

Graebe (*4*) attributes the frequent failure of the method to e easy formation of nitrogen gas, and Feist (*2*) adds that ghly volatile compounds often escape detection. Although hrer (*6*) states that the detection is infallible if the vapors e repeatedly passed over the hot sodium, no practical thod for carrying out this operation has been found. ter this manuscript had been submitted to the editor there peared an article by Miceli (*8*) which is essentially a simfication of Kehrer's method. Many special tests have been scribed, such as those of Zenghelis (*10*) and Högl (*5*), but st of them are impractical and applicable only to nitrogen. Castellana (*1*) dropped the organic material into an ignited xture of potassium carbonate and magnesium, but Flieringa found that this procedure often assimilated enough nitro- n from the air to give a positive test; hence, the original jection of Graebe is overcome and it is merely necessary to nove the air from the tube. Flieringa accomplished this incorporating hydrated sodium carbonate in the mixture, t the authors find that the sensitivity of the reaction is luced. They created inert atmospheres by adding such ids as sodium acetate, naphthalene, and paraformaldehyde, with the invariable result that the sensitivity was reduced, probably because of dilution of the vapors of the organic material. Ether is superior to these materials, for the reason that it is completely vaporized before it is necessary to heat the organic material. Back-diffusion of the air is prevented by means of the glass-wool plug, and increased sensitivity is assured by passing the vapors over the ignited mixture.

The test as described below is positive for as little as 0.46 mg. of aniline, which represents a theoretical concentration of 0.032 mg. of cyanide ion per 5 cc. of leachings, whereas Kolthoff (*7*) found the sensitivity of the Prussian blue reaction to correspond to 0.01 mg. of cyanide ion per 5 cc.; hence the sensitivities of the production and the detection of cyanide are of the same order.

The method of testing for nitrogen as cyanide in the leachings when sulfur is absent has been used as a measure of the effectiveness of the various fusion mixtures; less specific directions are likely to lead to erroneous results. The tests for sulfur, for nitrogen in the presence of sulfur, and for the halogens are described by Shriner and Fuson (*9*).

The test has been applied successfully to a large number of compounds of various compositions and is in general use by all students of organic chemistry at the University of Kentucky. No difficulty has been met in testing the nitro compounds, although according to Shriner and Fuson (*9*) they

often escape the sodium fusion. One compound—namely, diazobenzene sulfonic acid—failed to give the expected result because of the violence of the detonation. Many compounds containing no nitrogen have been tested and in no case has a nitrogen test been obtained.

Procedure

The fusion mixture is prepared by grinding to a fine powder two parts of anhydrous potassium carbonate and one part of magnesium powder. It retains its usefulness over a long period and may be easily dispensed from the bottle by means of a spoon shaped to contain approximately 0.2 gram of the mixture.

Filling the Tube. Place 2 drops of liquid or the equivalent weight of solid in the bottom of a 75-mm. soft-glass test tube, being careful that the liquid has not wet the sides of the tube. Then, holding the tube at an angle about 30° from the horizontal, allow to slide down it, to within about 1 cm. of the substance, about 0.2 gram of the magnesium-potassium carbonate mixture. This should extend about 3 cm. up the tube. Allow 2 drops of ether to run down onto the mixture, and plug the mouth of the tube tightly with glass wool.

The Ignition. Holding the tube at the same angle with forceps, heat in the hottest portion of the Bunsen flame, beginning directly under the mixture and nearest the mouth of the tube. When the mass begins to glow, bring the lower end of the tube into the flame so as to distill the substance over the glowing mass. Continue the heating so as to keep the mass glowing and the substance distilling, finally turning the burner up and heating the full length of the tube to dull redness. Then carefully drop it into a 15-cm. (6-inch) test tube containing 20 cc. of water, shake vigorously to break up the ignition tube, filter, and use the filtrate for the various tests.

The compound to be tested must not be heated until the reaction between the carbonate and the magnesium has started. Failures by those unfamiliar with the test have been traced to the omission of this precaution.

Test for Nitrogen in the Absence of Sulfur. To 5 cc. of the filtrate add 5 drops each of 10 per cent sodium hydroxide, 4 per cent ferrous ammonium sulfate, and 20 per cent potassium fluoride. Allow the tube to stand in boiling water for 3 minutes, then cool by shaking in cold water. Add a drop of 5 per cent ferric chloride and acidify by the addition of 6 N sulfuric acid until the precipitated hydroxides just dissolve. The appearance of the blue coloration is indicative of the presence of nitrogen.

Conclusions

The magnesium–potassium carbonate method of fusion of organic compounds has been studied and found to be superior to the older sodium fusion. The test materials are more easily prepared, preserved, and handled than is metallic sodium. The method of fusion is equally as rapid, more reliable, and less dangerous than the sodium fusion.

Literature Cited

(1) Castellana, *Gazz. chim. ital.*, 34, II, 357 (1904).
(2) Feist, *Ber.*, 35, 1559 (1902).
(3) Flieringa, *Pharm. Weekblad*, 57, 3 (1920).
(4) Graebe, *Ber.*, 17, 1178 (1884).
(5) Högl, *Mitt. Lebensm. Hyg.*, 24, 164 (1933).
(6) Kehrer, *Ber.*, 35, 2523 (1902).
(7) Kolthoff, *Z. anal. Chem.*, 57, 14 (1918).
(8) Miceli, *J. Chem. Education*, 13, 515 (1936).
(9) Shriner and Fuson, "Identification of Organic Compounds," p. 61, New York, John Wiley & Sons, 1935.
(10) Zenghelis, *Compt. rend.*, 173, 308 (1921).

Received October 23, 1936. Contribution from the Chemical Laboratory of the University of Kentucky.

Determination of Potassium

By Means of an Aqueous Solution of Trisodium Cobaltinitrite in the Presence of Nitric Acid

L. V. WILCOX
U. S. Department of Agriculture, Bureau of Plant Industry, Rubidoux Laboratory, Riverside, Calif.

An aqueous solution of trisodium cobaltinitrite replaces the familiar two-solution reagent. Nitric acid, rather than acetic acid, is used as the acidifying agent to maintain the nitrate-nitrite equilibrium and thereby prevent nitrite decomposition. The resulting precipitate is granular, heavy, and easily filtered and washed. The gravimetric and volumetric procedures for the determination of potassium by this new method are described. The normality of the oxidizing solution bears a stoichiometric relation to the potassium of the precipitate and the equation for the reaction is shown. The absolute accuracy as well as the reproducibility appears to be within ±0.05 mg. expressed as potassium.

THE cobaltinitrite reaction has been studied by a large number of workers and its application to the quantitative determination of potassium forms the subject matter of an already voluminous literature. Almost without exception the two-solution reagent of Adie and Wood (*1*) has been used resulting in an extremely fine precipitate, difficult to filter, of variable composition, and bearing no evident stoichiometric relation to a volumetric solution used in its estimation. As a result of a theoretical consideration of this reaction, another reagent is suggested which overcomes the difficulties mentioned above.

In the method here described, use is made of an aqueous solution of trisodium cobaltinitrite as the precipitating reagent and the reaction is carried out in the presence of nitric acid. Trisodium cobaltinitrite has been used extensively as a qualitative reagent for potassium, but its use with nitric acid in the quantitative determination of potassium is thought to be an innovation. The following advantages result: (1) The precipitate is crystalline and heavy, comparing favorably with barium sulfate in ease of filtering and washing; (2) the composition appears to be constant and practically

independent of the Na^+ concentration; (3) the determination can be completed either gravimetrically by drying and weighing the precipitate or volumetrically by titration with potassium permanganate in acid solution.

TABLE I. GRAVIMETRIC AND VOLUMETRIC DETERMINATION OF POTASSIUM AS DIPOTASSIUM SODIUM COBALTINITRITE

	Gravimetric		Volumetric	
Potassium Present	Weight of precipitate	Potassium found	$KMnO_4$[a] 0.0514 *N*	Potassium found
Mg.	*Mg.*	*Mg.*	*Cc.*	*Mg.*
2.00	11.5	1.98	5.46	1.99
2.00	11.5	1.98	5.41	1.97
3.00	17.4	3.00	8.28	3.02
3.00	17.5	3.01	8.36	3.05
4.00	22.7	3.91	10.88	3.97
4.00	23.0	3.96	10.96	4.00
5.00	29.0	4.99	13.68	4.99
5.00	29.1	5.01	13.66	4.99
10.0	58.4	10.0	27.14	9.91
10.0	58.2	10.0	27.22	9.94

[a] Standardized by means of sodium oxalate. 1 cc. = 0.365 mg. of potassium.

While the author has not attempted to include a bibliography, the number of papers published currently evidences a keen interest in, and a need for, a more satisfactory method for potassium in small quantities, especially in waters, soil extracts, and plant materials.

It is the experience of the writer that the cobaltinitrite method, as usually applied, gives high results, which appear to be due to the occlusion of material from the precipitating medium. The Adie and Wood reagent obtained by mixing a solution of cobaltous acetate in acetic acid with a solution of sodium nitrite may contain, in addition to the trisodium cobaltinitrite, cobaltous acetate, sodium acetate, sodium nitrite, and acetic acid, and approaches saturation with the oxides of nitrogen. Obviously, a reagent containing less extraneous material would be desirable. Trials were made with an aqueous solution of trisodium cobaltinitrite, the sample being acidified in this case with acetic acid. The results were more nearly quantitative but still slightly high. There was also some decomposition of the reagent during precipitation, as evidenced by the evolution of gas.

Nitrous acid or nitrites in acid solution are unstable and the decomposition can be represented by the equation:

$$3HNO_2 = HNO_3 + 2NO + H_2O$$

The equilibrium constant for this reaction is given by Latimer and Hildebrand (*2*) as $K=30$, which indicates that it might be rather easily reversed, or, stated in another way, the addition of nitric acid should retard the decomposition of nitrite. Accordingly, nitric acid was substituted for acetic acid. The results were so satisfactory that these reagents were made the basis for the quantitative methods herein described.

It has been the practice, in the volumetric determination of potassium, to use an arbitrary factor for the oxidizing solution. In the procedure developed by the writer, this is not necessary; in fact, a stoichiometric relation exists between the potassium in the precipitate and the normality of the potassium permanganate solution. It is suggested that the permanganate be standardized by the use of pure sodium oxalate and the value in terms of potassium be calculated on the basis of the oxidation-reduction reaction given below.

The volumetric determination depends upon the oxidation of the nitrite of the precipitate with permanganate in acid solution. It has not been emphasized that the cobalt, present as Co^{+++}, under these conditions is a strong oxidizing agent equal to potassium permanganate and that it therefore oxidizes an equivalent amount of nitrite. The reaction can be represented by the following equation:

$$K_2NaCo(NO_2)_6 + 11KMnO_4 + 14H_2SO_4 = 5CoSO_4 + 9MnSO_4 + 2Mn(NO_3)_2 + 5NaNO_3 + 21KNO_3 + 14H_2O$$

Here, $30NO_2$ or 60 reducing equivalents are balanced by $11KMnO_4$ or 55 oxidizing equivalents plus 5 oxidizing equivalents from the cobaltic-cobaltous couple.

Therefore, $11KMnO_4$ or 55 equivalents are required for 10K or:

$$\frac{10K}{55} = \frac{390.96}{55} = 7.1084 \text{ grams of K per equivalent of } KMnO_4$$

Then, cc. of $KMnO_4$ × normality of $KMnO_4$ × 7.1084 = milligrams of K in the sample titrated.

Gravimetric Determination of Potassium

REAGENTS. Trisodium cobaltinitrite solution. Prepare an aqueous solution containing 1 gram of the salt of reagent quality in each 5 cc., allowing 5 cc. for each determination. Filter before use. The solution is stable for some time, but the writer prefers to make up a fresh lot before each set of determinations. Nitric acid, approximately normal and 0.01 *N*. Ethyl alcohol, 95 per cent.

PROCEDURE. The aliquot for analysis should contain between 2 and 15 mg. of potassium in a neutral aqueous solution of 10-cc. volume. Add 1 cc. of 1 *N* nitric acid and 5 cc. of the sodium cobaltinitrite solution, mix, and allow to stand for 2 hours. Filter in a porous-bottomed porcelain filtering crucible, the tare weight of which is known, using 0.01 *N* nitric acid in a wash bottle to make the transfer. Wash 10 times with 2-cc. portions of the dilute nitric acid and 5 times with 2-cc. portions of alcohol. Evacuate until quite dry. Wipe the outside with a cloth, dry for 1 hour at 110° C., cool in a desiccator, and weigh.

The composition of the precipitate can be represented by the formula $K_2NaCo(NO_2)_6 \cdot H_2O$. K = 17.216 per cent.

Volumetric Determination of Potassium

REAGENTS. In addition to the reagents listed under the gravimetric procedure, except 95 per cent ethyl alcohol, the following will be required: sodium hydroxide, approximately 0.5 *N*, sulfuric acid, concentrated; potassium permanganate solution, standard 0.05 *N*; sodium oxalate solution, standard 0.05 *N*.

PROCEDURE. Follow the gravimetric procedure through the precipitation and washing with nitric acid. Omit washing with alcohol. Wash the precipitate into a 250-cc. beaker, place the crucible in the beaker, and make to about 100 cc. with water. Add 20 cc. of 0.5 *N* sodium hydroxide and boil for 3 minutes. Withdraw into another beaker a slight excess of standard potassium permanganate, make to 50 cc. with water, and add 5 cc. of concentrated sulfuric acid. Pour the hot potassium cobaltinitrite solution into the cold potassium permanganate solution, transfer the crucible, and wash the beaker with a small amount of water. Add an excess of standard sodium oxalate solution, heat to boiling, and complete the titration with potassium permanganate.

Cc. of $KMnO_4$ × normality of $KMnO_4$ × 7.1084 = milligrams of K in sample titrated.

Table II shows the effect of a number of cations. The volume in each case was 10 cc., so that the concentration of Na^+ in sample 2 is approximately 1 *N*, in addition to the Na^+ of the reagent. Ca^{++} and Mg^{++} in concentrations to 0.2 *N* appear to have little effect (samples 4 and 7) and likewise 0.1 *N* Ba^{++} (sample 9). The high result shown as

TABLE II. EFFECT OF VARIOUS CATIONS ON THE GRAVIMETRIC DETERMINATION OF POTASSIUM

(In each case, 5.00 mg. of potassium were present.)

Sample	Salt Added Formula		Weight of Precipitate	Potassium Found
		Mg.	*Mg.*	*Mg.*
1	$NaNO_3$	340	29.0	4.99
2	$NaNO_3$	850	29.3	5.04
3	$Ca(NO_3)_2 \cdot 4H_2O$	118	28.9	4.98
4	$Ca(NO_3)_2 \cdot 4H_2O$	236	28.8	4.96
5	$Ca(NO_3)_2 \cdot 4H_2O$	472	27.9	4.80
6	$Mg(NO_3)_2 \cdot 6H_2O$	128	28.7	4.94
7	$Mg(NO_3)_2 \cdot 6H_2O$	256	29.0	4.99
8	$Mg(NO_3)_2 \cdot 6H_2O$	512	28.4	4.89
9	$Ba(NO_3)_2$	130	28.8	4.96
10	$Ba(NO_3)_2$	325	38.4	6.61
11	NH_4NO_3	2	30.2	5.20
12	NH_4NO_3	5	32.5	5.60

TABLE III. GRAVIMETRIC DETERMINATION OF POTASSIUM IN PLANT MATERIAL

Sample	1		2	
Alfalfa sample, grams	1.1403		0.9987	
Potassium chloride added, grams	0		0.0961	
Potassium found, entire sample, mg.	52.0	52.0	96.2	96.4
Potassium referred to 1 gram of sample, mg.	45.6	45.6	96.3	96.5
Potassium added to 1 gram of sample 2, mg.	..	..	50.4	50.4
Theoretical weight of potassium sample 2 (1-gram basis), mg.	(45.6 + 50.4)		96.0	96.0
Total potassium found in 1 gram of sample 2, mg.	..	..	96.3	96.5
Recovery of total potassium, per cent	..	..	100.3	100.5

sample 10 resulted from the use of 325 mg. of barium nitrate or approximately 0.25 N Ba ammonium must be absent.

Silica in small amounts, as silicate, causes no difficulty, but the hazard that it will separate as silica gel when acidified warrants its removal. Sulfate and chloride in large amounts tend towards low results, the error being in the order of 1 to 2 per cent. Acetate will produce correspondingly high results.

The volume of 1 N nitric acid used can vary from 0.5 to 5 cc. without measurable effect. The temperature of the solution during precipitation should be about 20° C. Lower temperatures give high values—e. g., 10° C. gave a positive error of 2 per cent while at 25° to 30° C. the result was low or the error was −2 per cent. The time allowed for precipitation was chosen arbitrarily. At the end of 1 hour, the results are slightly low, while at 7 hours they average about 2 per cent high. The temperature at which the precipitate is dried may vary from 80° to 120° C.

Table III presents the results of an analysis of plant material for potassium by the gravimetric procedure. In this case the potassium was separated directly from an acid solution of the plant ash. The sample analyzed was the aboveground portion of alfalfa grown in sand culture with a nutrient solution. Duplicate samples were weighed into platinum dishes. To sample 2 a known amount of potassium chloride was added. The samples were dried and ignited in the presence of sulfuric acid. The white ash was digested with water containing 2 cc. of 1 N nitric acid, filtered, and made to 100 cc. Duplicate 10-cc. aliquots were taken for analysis.

Consideration of the tables here presented and experience with the method over a period of approximately 1 year seem to justify the statement that the reproducibility and absolute accuracy fall within the limits of ±0.05 mg. of potassium.

Literature Cited

(1) Adie, R. H., and Wood, T. B., *J. Chem. Soc.*, 77, 1076–80 (1900).
(2) Latimer, W. M., and Hildebrand, J. H., "Reference Book of Inorganic Chemistry," New York, Macmillan Co., 1929.

RECEIVED September 28, 1936.

Physical Properties of Asphalt

Viscosity-Temperature Susceptibility

SEWARD MASON, R. J. LOOMIS, AND S. D. PATTERSON, Montana State Highway Department, Materials Laboratory, H. G. NEVITT AND L. C. KRCHMA, Socony-Vacuum Oil Company, Inc., White Eagle Division, Kansas City, Mo.

PREVIOUS papers, such as those of Holmes, Collins, and Child (*2*), Traxler and Schweyer (*5*), and Nevitt and Krchma (*4*), have discussed indexes for the rates of change of viscosity of asphalts with temperature, but very few references are available that discuss this question with respect to several asphalts, particularly domestic asphalts, over the usual pentration range. Holmes, Collins, and Child carefully made the necessary analysis and comparisons on the basis of the available indexes but, as pointed out by Traxler and Schweyer and by Nevitt and Krchma, the indexes employed were for a good part empirical. The asphalt viscosity index (A. V. I.) and the viscosity-temperature susceptibility coefficient (V. T. S.) were suggested as indexes of fundamental physical significance which would more logically indicate the rates of change of the viscosities with temperature.

On the basis of a comparison of the most acceptable indexes made by Nevitt and Krchma, it appeared that the viscosity-temperature susceptibility coefficient was most suitable because of its relative independence of the consistency and the temperature ranges over which it is to be determined. Accordingly in the present investigation the viscosity-temperature characteristics of several domestic asphalts and one Mexican asphalt have been studied over the usual penetration ranges, using the viscosity-temperature susceptibility coefficient as the index.

Standard A. S. T. M. procedures were employed wherever possible. The penetrations were determined at 25° C. exactly following the A. S. T. M. procedure. The viscosities were determined at 98.89° C. (210° F.) and 135° C. (275° F.) using a thermostatically controlled Saybolt viscometer with interchangeable Universal, Furol, and asphalt orifices (*3*).

A special thermometer which met the Saybolt thermometer requirements for the 135° C. viscosities was used; for the 98.89° C. viscosities the usual Saybolt thermometer was used.

The results reported are an average of at least three independent determinations of the viscosity. Times of efflux appreciably below 50 seconds were avoided, or usually checked using the next smaller orifice. Similarly times of efflux more than 600 seconds were run on the next larger orifice whenever possible.

The A. P. I. Saybolt viscosity conversion (*1*) was used to convert Saybolt viscosities to kinematic units. The viscosities determined by the "asphalt tip" were multiplied by 10 to convert to Saybolt Furol viscosities. This conversion is believed to be within the limits of the errors inherent in the determinations of Saybolt viscosities at these elevated temperatures.

The viscosity-temperature susceptibility coefficient was calculated from the formula given by Nevitt and Krchma (*4*) where μ_1 and μ_2 are the kinematic viscosities at absolute temperatures T_1 and T_2.

$$\text{V. T. S.} = 0.221 \frac{\text{Log}\left(\frac{(\text{Log}\,\mu_1 + 0.8)}{(\text{Log}\,\mu_2 + 0.8)}\right)}{\text{Log}\,\frac{T_2}{T_1}}$$

Table I. Viscosity-Temperature Susceptibility Coefficient of Typical Commercial Asphalts

Type	Manufacture	Penetration At 25° C.	Viscosity At 98.89° C.	Viscosity At 135° C.	V. T. S.
Mexican	Steam	24	1152[a]	78[a]	0.736
		97	221[a]	245[b]	0.717
		213	111[a]	150[b]	0.707
Smackover	Steam	21	687[a]	535[b]	0.739
		55	209[a]	235[b]	0.720
		92	152[a]	179[b]	0.732
		149	105[a]	136[b]	0.726
		231	783[b]	112[b]	0.722
Illinois	Vacuum-steam and air	44	349[a]	298[b]	0.769
		75	218[a]	233[b]	0.731
		106	167[a]	191[b]	0.737
		179	96[a]	127[b]	0.732
		257	67[a]	98[b]	0.731
Midcontinent	Vacuum-steam	27	439[a]	360[b]	0.756
		82	162[a]	188[b]	0.732
		142	102[a]	124[b]	0.759
		188	76[a]	110[b]	0.722
Wyoming	Vacuum-steam	32	339[a]	292[b]	0.770
		69	164[a]	174[b]	0.765
		100	125[a]	142[b]	0.767
		150	857[b]	106[b]	0.774
		197	674[b]	88[b]	0.781
		309	442[b]	676[c]	0.753
		Soft	266[b]	462[c]	0.759
Wyoming	Steam	23	480[a]	375[b]	0.772
		41	259[a]	241[b]	0.769
		78	146[a]	164[b]	0.755
		133	89[a]	112[b]	0.765
		180	70[a]	95[b]	0.766
		222	541[b]	77[b]	0.770
West Texas	Vacuum-steam	30	224[a]	204[b]	0.790
		102	79[a]	95[b]	0.798
		134	61[a]	81[b]	0.786
		207	408[b]	61[b]	0.782
California	Vacuum-steam	20	270[a]	207[b]	0.840
		96	88[a]	90[b]	0.855
		156	57[a]	67[b]	0.854
		207	454[b]	58[b]	0.842
		300	334[b]	48[b]	0.836
Montana	Pressure still	28	138[a]	111[b]	0.902
		80	61[a]	64[b]	0.899
		122	467[b]	541[c]	0.876
		194	322[b]	420[c]	0.875
		283	248[b]	362[c]	0.907

[a] Viscosity expressed in seconds using asphalt tip.
[b] Viscosity expressed in Furol seconds.
[c] Viscosity expressed in Universal seconds.

Table II. Viscosity-Temperature Susceptibility Coefficient of Tars

Type of Tar	Sample No.	V. T. S.
Vertical retort	1–V	1.13
	2–V	1.16
By-product coke oven	3–C	1.29
	4–C	1.19
	5–C	1.20
	6–C	1.24
	7–C	1.19
Horizontal retort	8–H	1.155
	9–H	0.956

The results, summarized in Table I, are on Mexican, mackover, Illinois, Midcontinent, Wyoming, West Texas, 'alifornia, and Montana asphalts of the usual penetration ınges. The materials are listed roughly in order of their iscosity-temperature susceptibility coefficient; the Mexican sphalt has the lowest by a small margin, while of the raight-run asphalts the California has the highest. The ıaterial of highest viscosity-temperature susceptibility coficient listed in Table I is a pressure-still residue of Monına crude. Examination of the pressure-still residuals data Nevitt and Krchma (*4*) indicates that these products may ave a still higher viscosity-temperature susceptibility cofficient of 0.9 to 1.0. Tars (unfiltered) have a coefficient of .1+, as is indicated by calculations based on the data of olkmann, Rhodes, and Work (*6*), summarized in Table II.

Judging from the available recent data covering the viscosity-temperature characteristics of bituminous materials, the values for the coefficient vary from 0.7 for straight-run low-temperature susceptibility asphalts to 1.2+ for tars.

The uniformity over the consistency range of the various asphalts investigated confirms the conclusion that the viscosity-temperature susceptibility coefficient is a suitable index and, using the Standard Saybolt viscometer, it is an index readily applicable at the present stage of asphalt technology.

Literature Cited

(1) Am. Petroleum Inst., Report of Committee on Viscosity Standards, 1922–1924.
(2) Holmes, Collins, and Child, Ind. Eng. Chem., Anal. Ed., **8**, 100 (1936).
(3) Nevitt, Socony-Vacuum Oil Co., White Eagle Div., *Tech. Bull.* **13** (1933); *Natl. Petroleum News*, p. 28 (April 3, 1935).
(4) Nevitt and Krchma, Ind. Eng. Chem., Anal. Ed., **9**, 119 (1937).
(5) Traxler and Schweyer, *Physics*, **7**, 67 (1936).
(6) Volkmann, Rhodes, and Work, Ind. Eng. Chem., **28**, 721 (1936).

Received November 27, 1936. Laboratory tests were made at the Montana Highway Commission Materials Laboratory.

A Simple Auto-Bubbler Pipet

MILTON BURTON AND THOMAS W. DAVIS

Chemistry Department, New York University, New York, N. Y.

THE writers have recently required in some gas analyses a small auto-bubbler pipet which would permit the complete and ready removal of contained liquid for subsequent analysis. The Francis auto-bubbler (*1*) was not suited to this requirement. The Matuszak bubbler (*2*) also has a region from which liquid is not readily removable and, in addition, is rather difficult for even the competent amateur to construct. The design indicated in Figure 1 obviates these difficulties. During use, the lower part of the unit shown is dipped into an Erlenmeyer flask.

The bead, *A*, is of Jena glass specially selected for roundness. The rest is Pyrex. The tube, *B*, is ground smooth on emery cloth where the bead is to rest and then the bead is ground in with a few easy turns, using emery powder. No special care need be taken with this latter operation. Tube *B* is now sealed off at its lower end and one side is blown out into a thin bubble which is contacted to a thinned portion of tube C. The hole at *D* is then blown out in the flame. The order of construction of the rest of the apparatus is obvious. Care should be taken in preparing the inner seal at *E* to pull out tube *C* so that hole *D* comes directly below the inner seal. This will eliminate all dead space. Tube *C* should be large enough to permit free movement of the bead. Accurate centering of tube *B* is then not essential.

The operation of the pipet is self-evident.

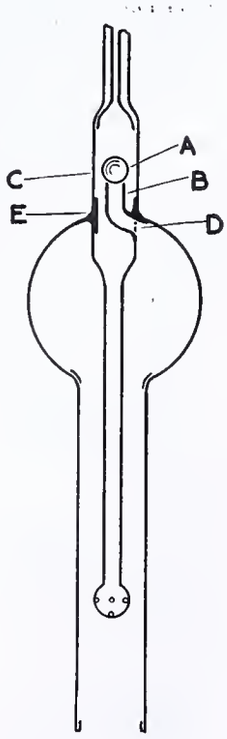

Figure 1. Auto-Bubbler Pipet

Literature Cited

(1) Francis, U. S. Patent 1,850,499 (1932).
(2) Matuszak, U. S. Patent 2,001,581 (1935).

Received January 21, 1937.

Carbonate Content of Oil Lye

Clarified by Centrifugation and Long Settling

JOHN E. S. HAN, Shanghai, China

THE small amount of carbonate remaining in volumetric sodium hydroxide solutions after different treatments for carbonate removal has been determined by Han and Chao (*3*). Although the "oil lye" method does not remove carbonate as completely as precipitation with barium salts, yet it has the decided advantage of not introducing foreign ions into the solution. The long time required for the solid carbonate to settle out is sometimes a disadvantage.

Han and Chao found that when settling was hastened by heating as recommended by Pregl (*4*), the oil lye contained 0.09 to 0.19 per cent of carbonate. (The carbonate content was expressed in terms of total alkali. Thus on an average 0.15 per cent of the Na_2O present was in the form of Na_2CO_3.) Allen and Low (*1*) shortened the time of settling by centrifuging oil lye at 2200 to 2300 r. p. m. for 30 minutes. Their data were obtained by a volumetric procedure somewhat different from that of the author and were not checked against a standard method. The centrifuge method, however, has a distinct advantage over that of Pregl in not requiring heating which might increase the solubility of sodium carbonate. The author considered it worthwhile to redetermine the carbonate content of centrifuged oil lye by both gravimetric and volumetric methods.

The author prepared oil lye by dissolving sodium hydroxide (reagent quality) in an equal weight of water, allowing it to cool, and centrifuging four 250-cc. portions in closed tubes at 2000 to 2300 r. p. m. for 30 minutes. The lye became perfectly clear and most of the solid matter packed tightly on the bottom of the tubes. A small amount of solid matter, however, remained floating on the surface of the lye and could be easily disturbed on the introduction of a siphon.

For volumetric analysis the simplified procedure of the author (*2*) was used. An Erlenmeyer flask was freed from carbon dioxide, filled with oil lye, and attached to the buret as shown in Figure 1. The buret was filled with *N* hydrochloric acid in the absence of carbon dioxide. No titration head was used, as entry of carbon dioxide was prevented by soda-lime guard tubes.

The carbonate content of the siphoned lye was slightly higher than that of the filtered lye; on an average they amounted to 0.11 and 0.10 per cent, respectively. Neither the siphoned nor filtered lye was perfectly clear, because of the presence of minute quantities of solid particles which had passed through. (The carbonate contents were slightly lower than the average value of oil lye clarified by heating, which also became slightly turbid on cooling.)

The author also examined a number of long-settled oil lyes; some had been settled for 1 to 5 months, and others for 2 to 2.5 years. Their carbonate contents seem to depend primarily on the temperature at which they were settled. Lyes 1 to 5 months old, which were settled and siphoned (or filtered) at temperatures not higher than 18° C., contained 0.07 per cent of carbonate, while three lots of lyes 2 to 2.5 years old all contained 0.09 per cent. The lyes 2 to 2.5 years old had been settled for much longer periods and were siphoned or filtered at temperatures not higher than 19° C., but they had passed two successive summers (with maximum temperature of 38° C.) in contact with solid sodium carbonate. Apparently the redissolved sodium carbonate formed supersaturated solutions.

Experimental data for the centrifuged lyes and settled lyes 4 to 5

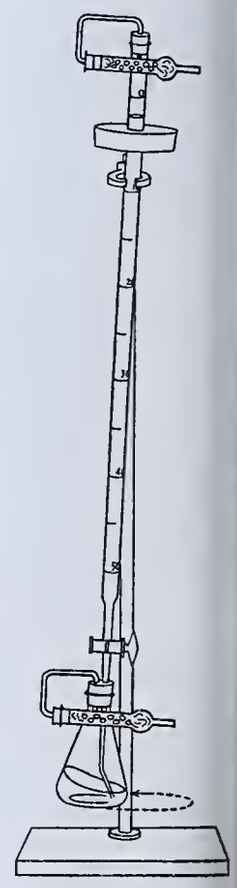

FIGURE 1

TABLE I. COMPARISON OF GRAVIMETRIC AND VOLUMETRIC METHODS

Oil Lye No.	Description of Oil Lye	Gravimetric Method: Oil Lye Used[a] Vol.	Total Na_2O	CO_2 found	Na_2O in form of carbonate		Volumetric Method: 1st End Point 0.9983 *N* HCl	0.02066 *N* HCl	2nd End Point 0.02066 *N* HCl	0.02518 *N* NaOH	Na_2O in Form of Carbonate: Direct calculation	Corrected (−0.02
		Cc.	*Grams*	*Gram*	*Gram*	%	*Cc.*	*Cc.*	*Cc.*	*Cc.*	%	%
1	Freshly prepared oil lye, cooled to 17° C., centrifuged, and siphoned	45	25.66	0.0193	0.0272	0.11	42.80	0.64	2.10	0.67	0.124	0.10
		45	25.66	0.0194	0.0273	0.11	42.80	0.76	1.68	0.28	0.129	0.11
		..	...	....	....	.. (0.11)	42.81	0.86	2.38	0.84	0.131	0.11 (0.11)
2	Freshly prepared oil lye, cooled to 17° C., centrifuged, and filtered through Jena filter tube (G3)	90	51.18	0.0370	0.0521	0.10	42.68	0.80	1.88	0.50	0.123	0.10
		90	51.18	0.0372	0.0524	0.10	42.68	0.84	2.38	0.94	0.119	0.10
		90	51.18	0.0370	0.0521	0.10 (0.10)	42.68	0.48	1.62	0.32	0.119	0.10 (0.10)
3	Settled for 5 months, siphoned	90	51.42	0.0264	0.0372	0.07	41.90[c]	0.52	2.02	0.84	0.096	0.08
		90	51.42	0.0266	0.0375	0.07	41.90[c]	0.90	1.84	0.74	0.090	0.07
		90	51.42	0.0272	0.0383	0.07 (0.07)	41.90[c]	0.50	1.54	0.48	0.092	0.07 (0.07)
4	Settled for 4 months, filtered through Jena filter crucible 1G3	90	50.59	0.0256	0.0361	0.07	41.22[c]	0.64	1.54	0.50	0.091	0.07
		90	50.59	0.0250	0.0352	0.07	41.22[c]	0.33	1.42	0.40	0.091	0.07
		90	50.59	0.0246	0.0347	0.07 (0.07)	41.22[c]	0.46	1.47	0.42	0.094	0.07 (0.07)
5	Settled for 4 months, filtered through Jena filter crucible 1G4	90	52.23	0.0245	0.0345	0.07	42.56[c]	0.68	1.14	0.08	0.099	0.08
		90	52.23	0.0242	0.0341	0.07	42.56[c]	0.15	1.29	0.28	0.090	0.07
		90	52.23	0.0248	0.0349	0.07 0.07)	42.56[c]	0.48	1.54	0.38	0.102	0.08 (0.08)

[a] Original oil lye without dilution, prepared by dissolving sodium hydroxide in an equal weight of water.
[b] 45 cc. of original oil lye diluted to 871 cc. and 45 cc. of the solution obtained used for each titration.
[c] 1.022 *N*.
Figures in parentheses are averaged values.

nonths old are given in Table I. All filtrations were carried ut by gravity, without suction and without access of car- on dioxide. Pressure was obtained by maintaining a fairly igh column of lye over the filtering medium.

Oil lye can be conveniently settled and stored in paraffin- ined bottles until needed. Preference should be given to he centrifuge method rather than the heating method, when il lye must be clarified in a short time.

The author is indebted to K. F. Tseng and M. I. Okada for permission to use the laboratories of the Shanghai Science Institute for part of the experiments.

Literature Cited

(1) Allen and Low, Ind. Eng. Chem., Anal. Ed., 5, 192 (1933).
(2) Han, *Ibid.*, 6, 209 (1934).
(3) Han and Chao, *Ibid.*, 4, 229 (1932).
(4) Pregl, *Z. anal. Chem.*, 67, 23–7 (1925).

Received November 10, 1936.

Anhydrous Sodium Carbonate as a Standard of Reference in Acidimetry

Stability of Sodium Carbonate in the Temperature Range 300° to 400° C.

G. FREDERICK SMITH AND G. F. CROAD, University of Illinois, Urbana, Ill.

THE generally accepted procedure for the preparation of anhydrous sodium carbonate by the conversion of pure odium bicarbonate calls for decomposition at 300° C. Valdbauer, McCann, and Tuleen (*3*) state that this con- ersion can be carried out at temperatures from 102° to 450° C. he wide difference between the previously accepted maxi- um temperature of 300° C. and the findings of Waldbauer nd collaborators (*3*) has led to the present investigation.

Preparation of Materials

Constant-Boiling Hydrochloric Acid. This was made by e process described by Foulk and Hollingsworth (*1*), and the stillation flask and condenser as well as the pressure-regulating parati were exact duplicates of those which they described. nce but two fractions of distilled acid were desired, the receiver as modified as shown in Figure 1. By its use the first 400 ml. of stillate were collected with the receiver in position as shown in igure 1. The last portion of distillate, 50 ml. of constant- oiling acid, was collected in the smaller of the two receivers ter the receiving flasks had been inverted without discontinuing e process of distillation. The constant-boiling hydrochloric id was taken at 750-mm. pressure, after correcting the existing rometric reading with the pressure-regulating system as own. A 5000-ml. flask was placed between the acid receiver om the still and the pressure-regulating device to minimize ctuations in the water manometer shown. Ten grams of atinum scrap were used in the distilling flask to prevent bump- g, the distillate was collected at a rate of 4 to 5 ml. per minute recommended, and 50 ml. of undistilled acid were left in the still.

Anhydrous Sodium Car- onate. Pure sodium bicar- onate was dissolved in pure ater to make a saturated lution at 80° C., which was tered and allowed to cool. e sodium bicarbonate thus tained was centrifuged and ied at approximately 50° C. alitative tests showed the sence of chloride, sulfate, tassium, etc. Anhydrous dium carbonate was pre- red from the bicarbonate the process described by ith and Hardy (*2*). The dium bicarbonate was dis- ciated at 290° C. at 1- to nm. pressure during a riod of 1 hour and stored glass-stoppered bottles in a siccator over anhydrous agnesium perchlorate. The paratus assembly for this eparation is shown in Fig- e 2.

Figure 1. Apparatus for Preparation of Constant-Boiling Hydrochloric Acid

Approximately 0.2 *N* Hydrochloric Acid. Portions of constant-boiling hydrochloric acid were weighed from weight burets, transferred to calibrated volumetric flasks, and diluted to volume.

Experimental Procedure

The purity of the anhydrous sodium carbonate was first experimentally demonstrated. Weighed portions of anhydrous sodium carbonate (corrected to the vacuum basis) were weighed into 400-ml. beakers, dissolved in water, and titrated, using the standard hydrochloric acid and Bureau of Standards calibrated burets. The agreement between the calculated normality of hydrochloric acid and the values found by this method, assuming the anhydrous sodium carbonate to be pure, is indicated by the following series of results:

0.2320	0.2320	0.2322	0.2319	Av. 0.2320	(calcd. 0.2318)
0.2005	0.2003	0.2000	0.2002	Av. 0.2002	(calcd. 0.2002)

The results show an agreement to within less than 0.01 per cent of theory, and are typical of results obtained from 10 different solutions of standard hydrochloric acid from different samples of prepared constant-boiling acid. The indicator used in these titrations was an aqueous solution of 0.10 per cent methyl orange and 0.25 per cent indigo carmine. The color change is from green in basic solution to gray at the end point and violet in acid solution. It is concluded that the anhydrous sodium carbonate was pure as prepared.

Change in Alkaline Value

Samples of the same preparation of anhydrous sodium carbonate were heated for 4 hours at various temperatures between 300° and 390° C. and used to standardize a given solution of standard hydrochloric acid made from constant-boiling material as described.

The results, shown in Table I, are averages from at

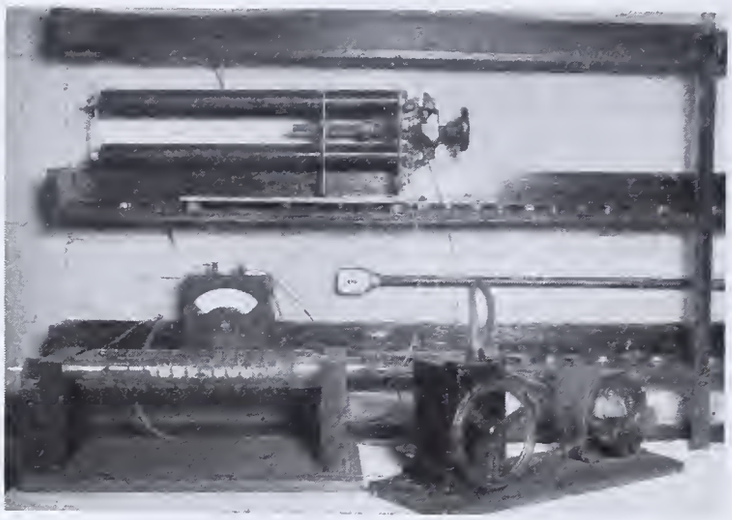

FIGURE 2. APPARATUS FOR PREPARATION OF ANHYDROUS SODIUM CARBONATE FROM BICARBONATE

least two closely agreeing duplicates. At 390° C. the error in the determination of acid normality is 3 per cent for the 4-hour time of decomposition. By plotting the data of Table I with temperature on one axis and acid normality on the other, it is seen that an approximate straight-line relationship is involved. There is no reason to believe that at 475° C. the error involved in a 4-hour treatment would not double the inaccuracy to approximately 6 per cent or more.

TABLE I. INFLUENCE OF TEMPERATURES BETWEEN 300° AND 390° C. ON ALKALINE VALUE OF ANHYDROUS SODIUM CARBONATE

(Time of heating 4 hours at indicated temperature. Normality of HCl used on weight basis, 0.2121)

Temperature ° C.	Normality of HCl Found	Change in HCl Normality
300	0.2121	0.0000
330	0.2097	0.0024
370	0.2075	0.0046
380	0.2070	0.0051
390	0.2061	0.0060

Determination of Decomposition

The experiments of Table I are repeated at a temperature of 390° to 400° C. with intervals of 0.25 to 3 hours. In this case a stream of dry, carbon dioxide-free air was passed over the sample and the evolved gases containing carbon dioxide of decomposition were then passed through ascarite and anhydrone in a weighed Turner tube to absorb evolved carbon dioxide. The loss in weight of the sample was also determined as a check. The results, shown in Table II, indicate a fair degree of agreement between the loss in weight of samples and the recovered weight of carbon dioxide evolved. With longer time intervals the rate of evolution of carbon dioxide seems to accelerate, possibly because of the effect of accumulation of sodium oxide as impurity. The time of reaction was not sufficiently extended to substantiate this point.

STUDIES IN CLOSED SYSTEM. The experiments of Table II were repeated with the changed condition that the system was kept closed until the end of the time interval involved and was then flushed out with a stream of dry, carbon dioxide-free air, and the carbon dioxide evolved was then absorbed and weighed. The rate of decomposition would in this case be expected to diminish as the accumulation of carbon dioxide increased. This was found to be the case, as shown in Table III.

An examination of Table III and comparison with Table II show that the rate of decomposition in a spacious closed system is about equal to that in a system in which the evolved carbon dioxide is removed rather than allowed to accumulate. Only at the 3-hour period of heating is the rate lessened. A graph of these data shows a rapid decrease in the change of evolution of carbon dioxide with increase in time, indicating that the vapor pressure of sodium carbonate at 400° C., which results in the evolution of carbon dioxide, does not appreciably retard the rate of decomposition until sufficient has accumulated. This effect is governed by the volume of the decomposition chamber.

TABLE II. DECOMPOSITION OF SODIUM CARBONATE AT 390° to 400° C. AT VARIOUS TIME INTERVALS

(As determined by loss in weight and weight of CO_2 evolved.)

Weight of Na_2CO_3, gram	0.7569	0.7564	0.7107	0.9116	0.7414
Time heated, min.	15	30	60	180	360
Weight of Na_2CO_3 after heating, gram	0.7552	0.7534	0.7070	0.9064	0.7285
Weight loss, gram	0.0017	0.0030	0.0037	0.0052	0.0129
Weight of CO_2 found, gram	0.0017	0.0032	0.0036	0.0063	0.0117
Av. per cent decomposition	0.23	0.40	0.51	0.63	1.66

TABLE III. DECOMPOSITION OF SODIUM CARBONATE AT 390° TO 400° C. AT VARIOUS TIME INTERVALS IN A CLOSED SYSTEM

(As determined by loss in weight and the weight of CO_2 evolved.)

Weight of Na_2CO_3, gram	0.5733	0.6687	0.6590	0.7744	0.8902
Time heated, min.	15	30	60	180	360
Weight of Na_2CO_3 after heating, gram	0.5716	0.6654	0.6552	0.7688	0.8831
Weight loss, gram	0.0017	0.0030	0.0038	0.0056	0.0071
Weight of CO_2 found, gram	0.0015	0.0032	0.0046	0.0062	0.0075
Av. per cent decomposition	0.28	0.46	0.64	0.76	0.80

The experiments of Table II were repeated at a temperature of 310° to 315° C., to test the possibility of heating sodium carbonate at a temperature above 300° C., which is the upper limit permissible according to Smith and Hardy (*2*) and many other investigators. Samples of approximately 1 gram lost in weight 0.0012 and 0.0015 gram, and the carbon dioxide evolved weighed 0.0014 and 0.0016 gram, respectively. A solution of 0.2120 *N* hydrochloric acid was restandardized using these samples, and the values 0.2096 and 0.2091 *N* were found.

Conclusions

From the experimental evidence it is to be concluded that anhydrous sodium carbonate dissociates to give off carbon dioxide gas at temperatures above 300° C. Heating for 1 hour at 310° to 315° C. results in an error of more than 1 per cent in the alkaline value of the sodium carbonate so treated. Heating at temperatures up to 400° C. greatly increases the error, using either an open or closed vessel for the decomposition. The authors cannot agree with Waldbauer, McCann, and Tuleen (*3*) that anhydrous sodium carbonate can be heated to 475° C. without alteration in neutralization equivalent. The dynamic method of determining the carbon dioxide pressure of sodium carbonate heated above 300° C. proves that there is an appreciable decomposition and that the resulting product is not suitable for use as an acidimetric standard. Anhydrous sodium carbonate, such as that prepared for this investigation from sodium bicarbonate with vacuum dissociation at 300° C., is suitable for use in acidimetry.

Literature Cited

(1) Foulk and Hollingsworth, *J. Am. Chem. Soc.* 45, 1220 (1923).
(2) Smith and Hardy, *J. Chem. Education*, 10, 507 (1933).
(3) Waldbauer, McCann, and Tuleen, IND. ENG. CHEM., Anal. Ed. 6, 336 (1934).

RECEIVED August 25, 1936.

MICROCHEMISTRY

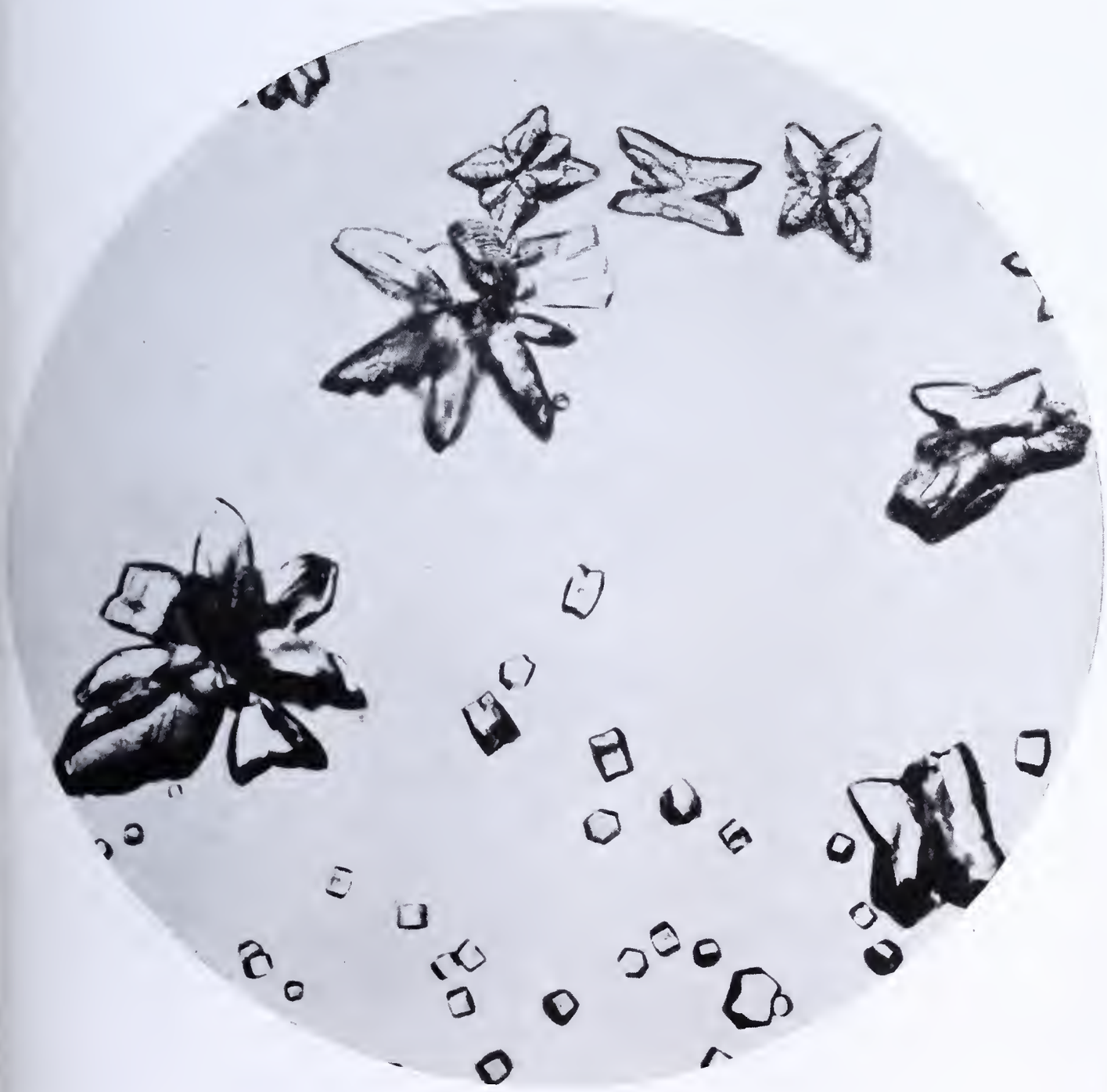

Photomicrograph
by courtesy of
A. A. Benedetti-Pichler

Bismuth
Cobalticyanide

The Living Cell

Physical Properties of and Microchemical Reactions

ROBERT CHAMBERS, M. J. KOPAC, AND C. G. GRAND

Department of Biology, Washington Square College, New York University, New York, N. Y.

THE micromanipulative technic depends upon a mechanical contrivance to manipulate microneedles and pipets in the field of the compound microscope. The tips of the needles and pipets, which are generally made of glass, are as fine as can be devised and the adjustments of the mechanism holding them are exceedingly accurate. For example, the tips of the two needles can be inserted into a living cell having a diameter of only 7 to 8 microns and, by moving the needles apart, the cell can be stretched without destroying it. However, successful injection of a fluid into such a small cell is a matter of chance. With the present development of the technic, microinjections which are sufficiently reproducible for a serious study—e. g., the effects of chemical reagents on the interior of living cells—must be done on much larger cells. Examples of these are the fresh-water ameba and marine eggs of the sea urchin and starfish. These cells on the average have a diameter of about 0.01 cm.

The value of the micromanipulation technic for studying the properties of protoplasm becomes evident when one realizes that protoplasm exists as such only when it is confined within microscopic dimensions and is bounded by its peculiar membrane. It is this membrane which determines the property of selective permeability of the living cell.

The actual existence of this membrane as a definitely differentiated structure has been regarded hitherto as hypothetical. It can be demonstrated by the micromanipulation method in various ways. A striking one is the microinjection into a living cell of the solution of a nontoxic dyestuff to which the cell is normally impermeable. The color of the injected solution quickly diffuses through the interior of the cell and stops on reaching the cell boundary. Evidently the interior of the cell is freely permeable to the dye and the inability of the dye to get in from without the cell or to pass out from within must be ascribed to a surface layer which is impermeable to the dye from either side.

Interesting cases are the injection of sodium bicarbonate and the ammonium chloride into the cytoplasm of a starfish egg. It has long been known that carbon dioxide and ammonia readily penetrate living cells, while the highly dissociated hydrochloric acid and sodium hydroxide do not. This selective action of the cell is strikingly shown by immersing starfish eggs in a solution of sodium bicarbonate. In this alkaline solution the eggs develop an intracellular acidity. On the other hand, an intracellular alkalinity occurs when the eggs are exposed to a solution of ammonium chloride which is acid. However, when these solutions are injected directly into the eggs the effects are reversed. This is because the injection brings the entire solution into the interior of the cell, with the result that the internal protoplasm reacts to the alkalinity of the bicarbonate and to the acidity of the ammonium chloride solutions.

The protoplasm of a living cell is able to repair a torn surface if the tear is not too extensive, and if the environment is normal. This is well illustrated in microdissection experiments on starfish eggs in sea water. No breakdown occurs if the tip of the needle is moved slowly through the protoplasm and out of its surface; but if the piercing action is performed suddenly, the surface film disrupts and the exposed cytoplasm will begin to spread out and its granules to scatter in the medium. While this is occurring, films may appear around the masses of the disorganizing material which swell and burst. Frequently films form beneath the disorganizing region within what is still normal cytoplasm. These films may unite and reach the intact, original plasma membrane which surrounds the healthy portion of the egg. After this no further disintegration occurs and the protoplasm, with its intact membrane, rounds up to constitute a diminutive but viable egg.

Calcium salts enhance the formation of the plasma membrane, while sodium and potassium salts tend to do the reverse. This reaction must not be confused with the action of these salts on the extraneous coatings of cells which are stiffened and coagulated by calcium. Calcium in the medium tends to stabilize the plasma membrane but, at the same time, to increase its fluidity.

Microinjection experiments present strong evidence that water forms a continuous phase in protoplasm. Aqueous solutions diffuse readily through the cytoplasm of such diverse types of cells as protoplasts of root-hair cells, amebas, various ova, muscle fibers, nerve cells, and ciliated epithelial cells. To ensure success the injection must be performed gradually; otherwise a localized disintegration may occur,

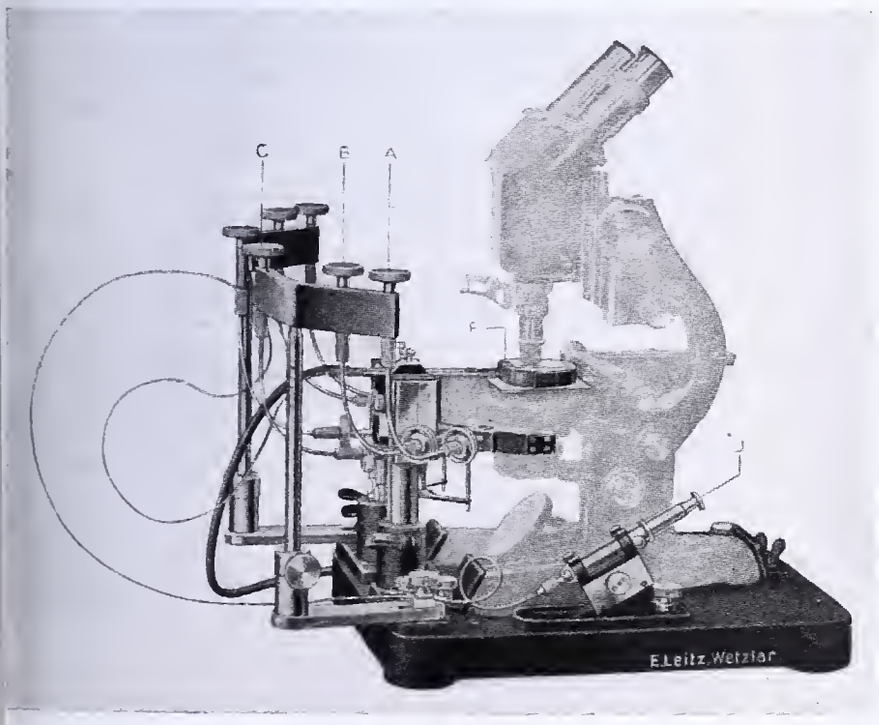

FIGURE 1. MICROMANIPULATOR WITH MICROSCOPE IN POSITION FOR OPERATION

Screw heads *A*, *B*, and *C* by means of flexible shafts control the movements of the microneedles which extend horizontally into the moist chamber, *F*, below the objective of the microscope. *A* and *B* control the two horizontal movements; *C*, the vertical. *J* is the plunger of the syringe which controls the pressure through a long, coiled copper capillary tube for the microinjections.

FIGURE 2. HIGHLY MAGNIFIED PHOTOGRAPH OF PART OF STARFISH EGG, SHOWING SEMIFLUID NATURE OF PROTOPLASM
Left, strand of protoplasm drawn out with the tip of a microneedle
Right, this strand on being released immediately flows back into the egg

and the resulting injury may spread and produce complete cytolysis. Frequently, however, a membrane may form around the disintegrating region to constitute a vacuole while the rest of the protoplasm remains unaffected.

The water within the cytoplasm freezes readily. To demonstrate this, the interior of the subcooled cell must be inoculated with an ice crystal, since the plasma membrane tends to obstruct the spread of freezing from outside the cell. In the ameba, the freezing is in the form of feathery ice crystals which spread in all directions from the site of inoculation. In the case of the muscle fiber of a frog, the ice forms long, slender columns between denser longitudinally arranged constituents of the fiber. If the frozen condition is maintained for more than a few minutes, the ice columns progressively enlarge and the ensuing dehydration of the protoplasm becomes irreversible.

Since protoplasm is an organized structure which is destroyed by crushing, it is obvious that a determination of the hydrogen-ion concentration of extracts of crushed tissue cannot be a reliable clue to the intensity of acidity within the living cell. The microinjection of lipoid-insoluble indicators into the protoplasm has given results least open to question, but even then the color tends to be more or less rapidly segregated in vacuoles. Values obtained for the intracytoplasmic pH by the best available methods lie between 6.8 and 7.2. These values have been obtained by injecting a series of indicators of overlapping ranges into such cells as echinoderm eggs, various somatic cells of vertebrates and the protoplasts of plant cells and of amebas. In Metazoa the cell nucleus has been found to be consistently more alkaline than the cytoplasm, the colorimetric value from injected indicators being in the neighborhood of pH 7.6 to 7.8.

The relatively neutral reaction of the internal protoplasm suggests that much of the protein present is on the alkaline side of its isoelectric point. This is borne out by the ease with which coagulation occurs when salts of polyvalent cations, even in very dilute concentrations, are injected into such cells as echinoderm eggs, amebas, and the protoplasts of plant cells. For example, calcium chloride in all concentrations down to 0.005 M and mercuric chloride in very low concentrations produce a coagulating effect which is either restricted or extensive according to the amount injected. The injection of sodium and potassium chlorides has no such effect, presumably because they form soluble salts of the majority of proteins present.

To the enzyme chemist the living cell is an important object of study because (1) the cell is a producer of enzymes and (2) many enzymatic processes take place in the cell. The endoenzymes, particularly those of the peptidase group, are of extreme interest. Recently the development of apparatus and methods by Linderstrøm-Lang and Holter, of Copenhagen, have made possible the quantitative study of the peptidase activity of single cells.

For the study of this activity on cellular material, the following procedure is used:

A small Jena-glass test tube of about 250-cu. mm. capacity is used as a reaction and titration vessel. In this are placed 4 to 7 cu. mm. of glycerol and water, to which is added the material (cells or cell fragments) under investigation. After a suitable time (usually 30 to 60 minutes) 7 cu. mm. of substrate are added. By this time the cell should be completely cytolyzed. The substrate most commonly used is a 0.2 M solution of the dipeptide, alanylglycine. The resulting mixture is stirred electromagnetically and placed in a water bath thermostatically controlled at a temperature of 40° C. After 24 to 48 hours the digestion is stopped by adding about 30 cu. mm. of 0.05 N hydrochloric acid in acetone. To this are added 150 cu. mm. of an acetone solution of naphthyl red which is used as an indicator. The titration is completed by adding known amounts (with a microburet) of 0.05 N hydrochloric acid in alcohol until a constant pH value as indicated by the color of the dye is reached. The color standard has the same dimensions as the reaction vessel. The cleavage of the substrate is determined in terms of cubic millimeters of hydrochloric acid necessary to complete the titration.

Holter and Kopac performed the following experiments on amebas to determine what role, if any, the various granules (particularly the neutral red and Janus B staining) and crystals play in the peptidase activity.

The amebas are transferred to small centrifuge tubes which are previously half-filled with a 2 per cent solution of Zulkowsky's soluble starch, which because of its density serves as a pycnotic cushion for the amebas while they are centrifuged. It has been found that stratification of the various inclusions can be accomplished by centrifuging at 2000 r. p. m. for 5 minutes and then at 7500 r. p. m. for 10 minutes. The amebas become essentially ellipsoidal and all granules, crystals, and other dense components collect at the centrifugal pole. Lipid components collect at the centripetal pole.

The centrifuged amebas are cut with two microneedles to separate the centrifugal and centripetal portions. The two fragments are transferred to separate reaction vessels to which 7 cu. mm. of phosphate buffer (pH 7.4) have previously been added. One hour later, 7 cu. mm. of substrate are added, the contents of each vessel are thoroughly mixed, and finally the vessels are placed in a water bath at 40° C. The period of digestion was varied between 18 and 24 hours. The amount of splitting of the substrate was determined by titrating with hydrochloric acid.

In a similar manner the peptidase activity of normal and denucleated amebas were compared. The nucleus of the ameba can be easily removed with a microneedle without causing the loss of any cytoplasm. Denucleated amebas were kept living for 24 hours before their enzymatic activity was determined. The results of these investigations on the peptidase activity of amebas are being published elsewhere.

In some experiments the successive changes in a cell are too rapid to be studied properly. However, a motion-picture film of these changes may be repeatedly reviewed. Photographs of microdissection experiments have been taken usually at 24 frames per second, making possible a record, for the duration of each exposure, of $^1/_{48}$th second.

RECEIVED January 5, 1937. Presented before the New York Section of the American Chemical Society, December 11, 1936.

Colorimetric Microdetermination of Cobalt and Potassium

C. P. SIDERIS, Pineapple Producers Coöperative Association, Ltd., Honolulu, Hawaii

The amount of potassium in the potassium-sodium cobaltinitrite precipitate is obtained indirectly by determining colorimetrically the cobalt in the acid solution of the precipitate with the use of nitroso R-salt (disodium salt of 1-nitroso-2-hydroxy-3,6-naphthalenedisulfonic acid). It is shown that the cobaltinitrite precipitate contains potassium and cobalt in the atomic ratio 1 to 2. The nitroso R-salt gives with cobalt solutions an intensely colored solution of a red dye which is extremely stable.

IN 1921 van Klooster (*3*) suggested the nitroso R-salt for the qualitative identification of cobalt, but no one seems to have adopted this reagent for the colorimetric determination of cobalt or the indirect determination of the potassium in the cobaltinitrite precipitate. Nitroso R-salt, disodium salt of 1-nitroso-2-hydroxy-3,6-naphthalenedisulfonic acid, may be obtained from the Eastman Kodak Company, or prepared in the laboratory following van Klooster's directions (*3*). This reagent gives colorations with nickel ion (brownish yellow) and with ferrous ion (green). The intense red coloration with cobalt ion develops rapidly in solutions buffered by the addition of acetate.

For the colorimetric determination, 10-ml. portions of acidified cobalt chloride solutions are measured off into test tubes. Each portion is treated with 2 ml. of sodium acetate solution and 1 ml. of the nitroso R-salt reagent, and the mixture is agitated for 5 seconds. The red coloration, which appears immediately, is very stable and may be used for colorimetric comparison either immediately or in the course of a few hours or even 2 or 3 days.

Table I shows that accurate results are obtained if the quantity of cobalt lies between 0.025 and 0.25 mg. The validity of Beer's law within this range is further borne out by the fact that identical results are obtained with standard solutions containing from 0.025 to 0.100 mg. of cobalt. In order to avoid the use of a calibration curve, it is therefore recommended to adjust the concentration of cobalt solution so that it lies between the limits of 0.0025 and 0.025 mg. of cobalt per ml. before proceeding to the colorimetric estimation. The volumes of the reagents should be increased proportionately if more than 10 ml. of the cobalt solution are used for the colorimetric determination.

TABLE I. CONTROLS FOR THE COLORIMETRIC DETERMINATION OF COBALT WITH THE USE OF NITROSO R-SALT

(The standard solutions contained the following quantities of cobalt: A, 0.100 mg.; B, 0.050 mg.; C, 0.025 mg.)

μ Cobalt Given	Cobalt Found: Standard A	Standard B	Standard C	Mean	Error
μ	μ	μ	μ	μ	%
500	267	266	265	266	−48
250	250	250	250	250	0
200	200	200	200	200	0
125	125	125	123	124	− 0.8
100	100	100	100	100	0
75	75	77	75	76	+ 1.3
50	50	50	50	50	0
25	25	25	25	25	0
10	8	7	5	7	−30

Determination of Potassium

The methods based on the precipitation of the potassium as cobaltinitrite and known previous to 1932, such as that of Jacobs and Hoffman (*2*), have been discussed by Peters and Van Slyke (*5*). Since 1932 a few other modifications (*4, 6, 7, 8, 9*) have been published which offer certain distinct advantages. Except for the gravimetric and electrolytic methods, all depend on the determination of the nitrite content of the precipitate, either volumetrically with permanganate or colorimetrically by the formation of azo dyes. The permanganate titration presents difficulties in the determination of very small quantities of potassium, since the recognition of the end point lacks precision. The colorimetric determination of nitrite, although highly sensitive, is not very reliable on account of the instability of the azo dye. The colorimetric method of Morris and Gerdel

(*4*), read by the writer after the nitroso R-salt method had been developed and extensively used, possibly offers advantages similar to the one discussed in this paper.

Table II. Controls for Determination of Potassium by Colorimetric Determination of the Cobalt Content of the Potassium Cobaltinitrite Precipitate

K Given	Number of Determinations	K Found, Arithmetical Mean	Average Deviation of Mean, ±Mg. K	Coefficient of Variability
Mg.		*Mg.*		%
2.000	2	1.950	35	1.8
1.000	5	1.000	0	0
0.750	1	0.750	.	..
0.500	5	0.490	7	1.4
0.250	5	0.251	5	2.0
0.125	2	0.118	5	4.2
0.094	3	0.092	1	1.1
0.063	2	0.068	3	4.4
0.047	3	0.047	2	4.2
0.032	3	0.031	4	13
0.016	1	0.012	.	..
0.008	1	0.006	.	..

The procedure for the determination of potassium is described below as it has been developed for the analysis of the ash of biological (plant) materials.

A quantity of organic matter or ash is taken that is expected to contain from 0.04 to 0.1 mg. or more of potassium. The ash is dissolved in 5 ml. of 1 per cent hydrochloric acid. Without filtering off the insoluble material, the solution is made alkaline to phenolphthalein by the addition of sodium hydroxide and boiled for 15 minutes in order to remove any ammonia. The precipitate formed with sodium hydroxide will contain any ions which, if not precipitated at this stage, might interfere with the determination. The solution is filtered, and the precipitate washed with hot water. As a rule 20 ml. of hot water will be sufficient for washing. The combined filtrate and washings are acidified to a pH of 3 to 6 by the addition of hydrochloric acid.

The rest of the procedure varies according to the quantity of potassium expected. If less than 1 mg. of potassium is present, the precipitation of the cobaltinitrite is carried out in a centrifuge tube (A); with larger quantities of potassium, the usual laboratory technic may be used (B).

A. If the amount of potassium does not exceed 1 mg., the entire filtrate is transferred to a centrifuge tube of 15-ml. capacity, which must have been thoroughly cleaned beforehand. The centrifuge tube is placed in a steam bath and its contents are evaporated to a volume of 0.5 ml. or less. If the volume of the solution should exceed 0.5 ml. to any appreciable extent, the following precipitation of the potassium cobaltinitrite may not be complete. The contents of the centrifuge tube are cooled, and then 5 ml. of the alcoholic sodium cobaltinitrite reagent are added slowly. The contents are mixed thoroughly with gentle agitation, and the centrifuge tube is placed for 4 hours, or preferably overnight, in a refrigerator. It is then centrifuged for 5 minutes with 5000 r. p. m., or for 7 minutes with 1350 r. p. m., and the supernatant liquid to a distance of 5 mm. above the precipitate is removed by means of a capillary siphon of approximately 1-mm. bore, as described by Peters and Van Slyke (*5*). The siphon is fixed in a 3-hole stopper, and operated by controlled suction. Care must be taken not to remove floating particles of the precipitate.

The washing of the precipitate is performed as follows: First 10 ml. of water are allowed to flow down the sides of the centrifuge tube and to mix with the residual fluid above the precipitate without disturbing the latter. After centrifuging 5 minutes, the liquid is removed as described above. Now 5 ml. of acetone are added, the precipitate is agitated slightly with a pointed glass rod, and centrifuged, and the liquid is removed with the capillary siphon. The treatment with 5-ml. portions of acetone is repeated until the washings no longer show a yellow coloration; three washings with acetone are usually sufficient.

To effect the solution of the cobaltinitrite precipitate, 5 ml. of 1 *M* sulfuric acid are added, and the centrifuge tube is placed in a water bath. Heating for 5 to 10 minutes will give a complete solution of the precipitate. The solution is diluted to a definite volume chosen so as to obtain a potassium concentration between 0.003 and 0.035 mg. of potassium per ml. (corresponding to 0.0023 and 0.026 mg. of cobalt per ml.), and the determination of cobalt is carried out as described above.

B. If from 1 to 100 mg. of potassium are present, the entire filtrate from the sodium hydroxide precipitate, which may have a volume from 50 to 100 ml., is received in a 200-ml. beaker and evaporated on a water bath to a volume of 1 ml. or less. It is cooled, and then 20 ml. of the alcoholic sodium cobaltinitrite reagent are added slowly. It is mixed thoroughly with gentle agitation, the beaker is placed for 4 hours, or preferably overnight, in a refrigerator, and the solution is then filtered with the use of suction through a filter tube with a very compact layer of thoroughly washed asbestos. The beaker and precipitate are washed repeatedly with water until the washings no longer show a yellow coloration. The filter tube is connected to a clean suction flask, and the precipitate is treated in the tube with 10 ml. of hot 1 *M* sulfuric acid. Without applying suction, it is allowed to stand for 5 to 10 minutes until no more yellow particles can be seen. Suction is applied, and the precipitate is washed with distilled water to collect all the cobalt of the precipitate in the suction flask. If the precipitate resists solution, the entire contents of the filter tube may be transferred into a beaker containing 10 ml. of 1 *M* sulfuric acid and 10 to 20 ml. of water. The mixture is heated on a water bath and filtered through filter paper. In either case, the filtrate is finally diluted to a known volume, so as to obtain a potassium concentration between 0.003 and 0.035 mg. of potassium per ml. before proceeding to the colorimetric determination.

Table II presents the results of the application of the method to the analysis of solutions of known potassium content. The precision of the method is indicated by listing the absolute average deviation of the mean, and the coefficient of variability (relative average deviation). The accidental deviations are due mostly to mechanical loss of precipitate, incomplete washing of precipitate, or the introduction of potassium by the glass or by soaps employed in the cleaning of the centrifuge tubes.

As to methodical errors, Peters and Van Slyke (*5*) and Bonneau (*1*) are of the opinion that variations in the weight of the cobaltinitrite precipitate are in part due to variations in the state of hydration of the precipitate, but that aside from the water of hydration the precipitate has the constant composition $K_2NaCo(NO_2)_6$, providing the precipitate forms in a solution in which the ratio Na to K exceeds 22; the sodium of the reagent was included in calculating the Na to K ratios. If the above ratio was smaller than 22, the precipitate tended more towards the composition $K_3Co(NO_2)_6$, and when the Na to K ratio was lowered to 1, the precipitate was almost entirely $K_3CO(NO_2)_6$. The directions given above for the precipitation of the cobaltinitrite possibly assure the composition $K_2NaCo(NO_2)_6$ of the precipitate. The data of Table II, which have been obtained by determining the cobalt content of the precipitates by comparison with known quantities of cobalt (cobalt standard solutions), indicate that the ratio K to Co is actually 2 to 1 and not 3 to 1. Finally, interferences with the colorimetric determination of the cobalt are prevented in the determination of potassium, as the procedure takes care of the eliminations of ions (Ni, Fe) which interfere with the nitroso R-salt reaction of the cobalt.

Reagents

Standard Cobalt Solution. Dissolve 3.043 grams of $CoCl_2 \cdot 6H_2O$ in water, add 5 ml. of 13 *M* hydrochloric acid, and dilute with water to 1 liter. One milliliter of this solution contains 0.7537 mg. of cobalt, which is equivalent to 1.000 mg. of potassium. This standard is relatively concentrated, and aliquots taken for comparisons must be diluted from 100 to 500 times.

Nitroso R-Salt Reagent. Dissolve 0.5 gram of nitroso R-salt in 100 ml. of water. The solution should be kept in the refrigerator to prevent spoilage.

Sodium Acetate Solution. Dissolve 100 grams of sodium acetate by heating with 200 ml. of water. Filter.

Sodium Cobaltinitrite Reagent. Dissolve 25 grams of sodium cobaltinitrite in 200 ml. of water, place in the refrigerator for 24 hours, and then filter. Immediately before use, mix portions of this solution with equal volumes of 95 per cent ethyl

alcohol. The alcoholic mixture should be discarded if it cannot be used immediately.

Acknowledgment

The author wishes to express his appreciation to R. Tam for his assistance.

Literature Cited

(1) Bonneau, L., *Bull. soc. chim.*, [4] 45, 798 (1929).
(2) Jacobs, H. R. D., and Hoffman, W. S., *J. Biol. Chem.*, 93, 685 (1931).
(3) Klooster, H. S. van, *J. Am. Chem. Soc.*, 43, 746 (1921).
(4) Morris, V. H., and Gerdel, R. W., *Plant Physiol.*, 8, 315 (1933).
(5) Peters, J. P., and Van Slyke, D. D., "Quantitative Clinical Chemistry," Vol. II, Baltimore, Williams & Wilkins Co., 1932.
(6) Robinson, R. J., and Putnam, G. L., Ind. Eng. Chem., Anal. Ed., 8, 211 (1936).
(7) Schueler, J. E., and Thomas, R. P., *Ibid.*, 5, 163 (1933).
(8) Taylor, F. H. L., *J. Biol. Chem.*, 87, 27 (1930).
(9) Volk, N. J., and Truog, E., *J. Am. Soc. Agron.*, 26, 537 (1934).

Received September 1, 1936. Published with the approval of the Director as Technical Paper No. 93 of the Pineapple Experiment Station, University of Hawaii.

Micromethod for Determining Viscosity of Lubricating Oils

HARRY LEVIN, The Texas Company, Beacon, N. Y.

A method is described for the determination of viscosity of a few milligrams of petroleum lubricating oils. It is based on the rate of rise of the sample into a clean fine vertical capillary. In the known samples examined, it has been found that this rate of rise is directly related to the absolute viscosities of the samples.

WITHOUT being habitually concerned with micro quantities of sample as are those engaged in biological sciences, even in industrial oil laboratories one has frequent need for information as to viscosity of very small samples. As a result a method has been developed for determining absolute viscosity on about 15 mg. of material which has found application in numerous instances where small amounts of material were available, such as oil left in sprayed cotton and textiles, unsaponifiable of fatty oils, oil films, and components separated in the usual chemical analysis of oil sludges.

The method is based on the rate of rise of the oil into a fine vertical capillary, the actuating force being surface tension, and is preferably used with only a few milligrams of material.

Viscosity measurements based on the rate of rise into a capillary have long been made in the petroleum industry on kerosenes by means of the Saybolt thermoviscometer; but here the actuating force is the head of oil, not its surface tension, and the sample needed is approximately a pint.

Small sample viscometers have recently been described by Lidstone (*1*) and by Schneider and McConnell (*2*). In the former, the liquid is sucked up into a capillary tube above the height to which it would rise because of its surface tension, and then allowed to fall back under gravity, the time being taken for the passage of the meniscus between any two points, and corrections being made for capillary rise and for drainage. Lidstone mentions as drawbacks to his method the large capillary rise and the somewhat doubtful drainage correction. The method of Schneider and McConnell employs 0.5 to 2 ml. of oil, in a "falling ball–inclined tube" type of viscometer.

Since the author's method is based on the rate of rise into a clean tube, drainage errors, which are large when efflux from fine capillaries is measured, are obviated, and a few milligrams of sample suffice.

A very detailed treatment has been given by Washburn (*3*), who has calculated the rate of advance of the meniscus of a liquid into horizontal and vertical capillaries.

Apparatus

Delivery pipet: a 20-cm. length of heavy-walled 1-mm. capillary glass tubing, one end ground to a cone. A line is etched around the tube at a point 25 mm. from the ground end, and another 6 mm. above that. (The capacity to the first mark is 0.02 ml. at 25° C.)

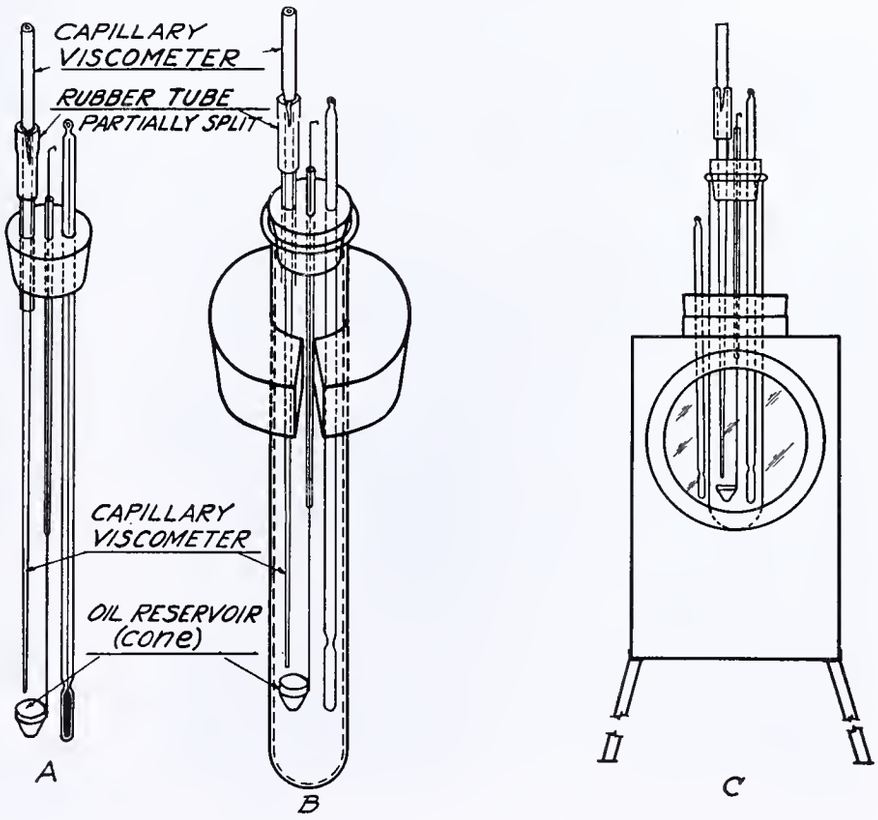

Figure 1. Diagram of Apparatus

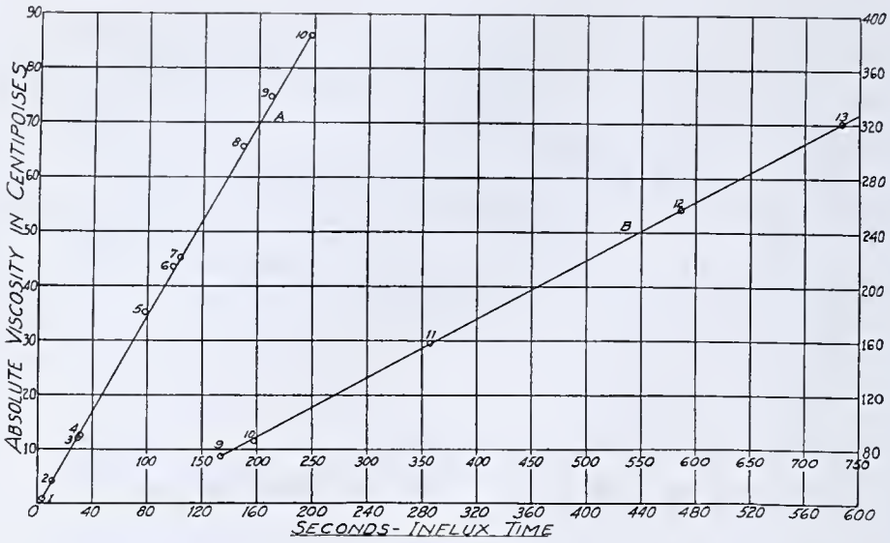

FIGURE 2

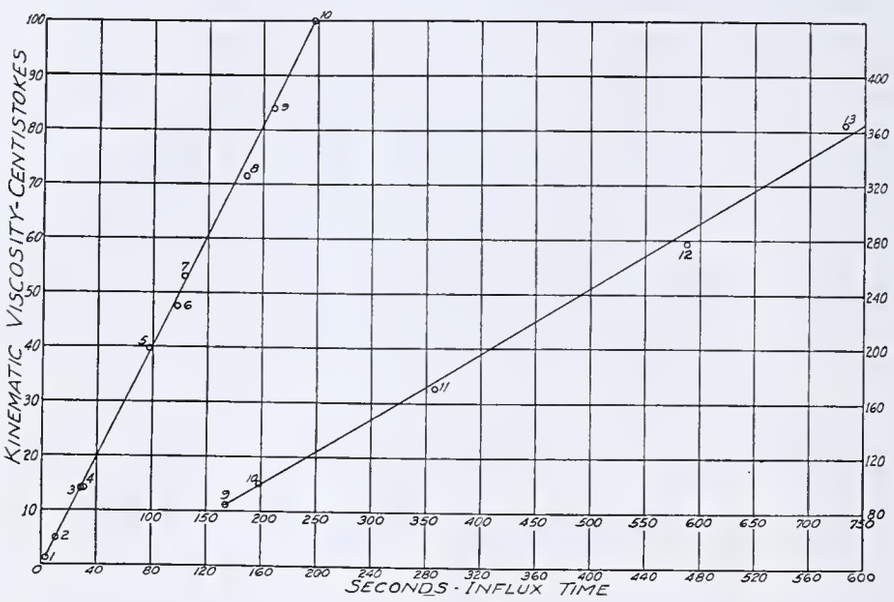

FIGURE 3

Oil reservoir: a hollow metal cone, 1 mm. thick, 8 mm. in outside diameter at top, 8 mm. deep outside, having four internal vertical grooves about 0.3 mm. deep. To the side of this is vertically soldered a 25-cm. length of 1-mm. steel rod.

Capillary viscometer: a 30-cm. piece of glass tubing drawn from a longer piece of capillary tubing having a 1-mm. bore and 5-mm. outside diameter, so that the tube to be used has about an 8-cm. length of substantially uniform 0.17-mm. bore at one end, the other end being the original tubing. This tube has a mark etched on it 25 mm. above the small end, another 13 mm. above that, and a third 13 mm. above the second.

Thermostat: a Vogel-Ossag viscometer water bath was found very satisfactory.

Miscellaneous: a test tube, 200 × 25 mm. (air bath); viscosity thermometers, A. S. T. M. type; rubber tubing 0.32-cm. (0.125-inch) bore; corks; and a stop watch.

Procedure

The sample to be examined is drawn into the delivery pipet to a point between the two marks and as close to the lower one as possible. Holding it vertically, the oil is allowed to drain to the lower mark, the sides and bottom of the pipet being wiped clean with a lintless cloth. The sample is then transferred from the delivery pipet to the oil reservoir, which should be in its place in the cork assembly as shown in Figure 1, *A*. Transfer is effected by bringing the end of the pipet into light contact with the inside of the cone, warming the pipet to assist very viscous oils, and forcing out the final portions by gently blowing into the top of the pipet through a tube filled with cotton. The cork assembly is then inserted into the test tube, *B*, which in turn is installed in the water bath, as in *C*.

The bath temperature and the air temperature inside the test tube should be within 0.06° C. (0.1° F.) of the desired test temperature throughout the test. This is easily accomplished with the Vogel-Ossag bath.

When the thermometer in the test tube has been at the desired temperature for 5 minutes, the actual viscosity measurement can be started by lowering the capillary viscometer into the oil reservoir and at the same moment starting the stop watch. The periods in seconds are then recorded as the oil rises by capillarity to the first, second, and third lines.

The time in seconds required for the sample to reach the middle line is used to obtain the absolute viscosity in centipoises, by reference to a curve based on data obtained with samples of known viscosity. For the author's capillary viscometer the curve shown as Figure 2 applies. It will be noted that there is a straight-line relationship between seconds of influx time and absolute viscosity in centipoises, the B curve being a continuation of the A curve to a different scale, for convenience, and both curves having in common the 74.7- and 86-centipoise points.

The relationship to kinematic viscosity is not so direct (Figure 3). The relationship to Saybolt Universal viscosity is more irregular still, as can be seen from Figure 4, despite the fact that it is drawn to a rather coarse scale to accommodate all the samples on one curve.

A curve established for liquids of one type will not be accurate for others having a very different surface tension. The curve must be based on samples of the type of the unknown.

TABLE I. RATIOS OF LINE TIMES

No.	Product	Gravity ° A. P. I. at $\frac{60}{60}$° F.	Saybolt Universal Viscosity at 100° F.	Kinematic Viscosity at 100° F., Centistokes	Absolute Viscosity, Centipoises	Influx Time in Seconds, Mark 1, a	to Mark 2, b	Mark 3, c	Influx Ratios $\frac{c}{a}$	$\frac{c}{b}$	$\frac{b}{a}$
1	Kerosene	50.2	33	1.4	1.06	1.3	3	7.5	6.0	2.50	2.40
2	300 burning oil	36.9	42	5.0	4.1	3.5	10.5	24	6.9	2.29	3.0
3	Spindle oil	29.4	74	14.1	12.2	10.5	29.5	67	6.3	2.25	2.8
4	Transformer oil	24.1	74	14.1	12.6	11	31	70	6.4	2.26	2.8
5	Turbine oil	26.9	184	39.7	35.2	27.5	78	173	6.3	2.22	2.8
6	Refrigerating oil	20.9	219	47.6	43.5	34.5	98	223	6.5	2.27	2.8
7	Motor oil	31.8	244	53.1	45.2	38	103	232	6.1	2.25	2.7
8	Turbine oil	20.5	327	71.5	65.5	53.5	148	335	6.3	2.26	2.8
9	Heavy red paraffin oil	24.9	383	83.9	74.7	59	168	375	6.4	2.23	2.8
10	Motor oil	30.2	457	100.2	86	71	198	...	...	...	2.8
11	Motor oil	19.7	779	171	157	131	358	807	6.2	2.25	2.7
12	Bus oil	19.4	1260	277	256	214	587	1308	6.1	2.23	2.7
13	Airplane oil	26.6	1672	365	321	267	732	1606	6.0	2.19	2.7

The kinematic viscosities of samples 1 and 2 were determined by means of a Vogel-Ossag apparatus, the equivalent Saybolt Universal viscosities being calculated by means of the A. S. T. M. equations. The Saybolt Universal viscosities determined on samples 3 through 13 were converted to their equivalent kinematic viscosities, likewise by means of the A. S. T. M. equations. The absolute viscosities were calculated from the kinematic viscosities and densities of the samples.

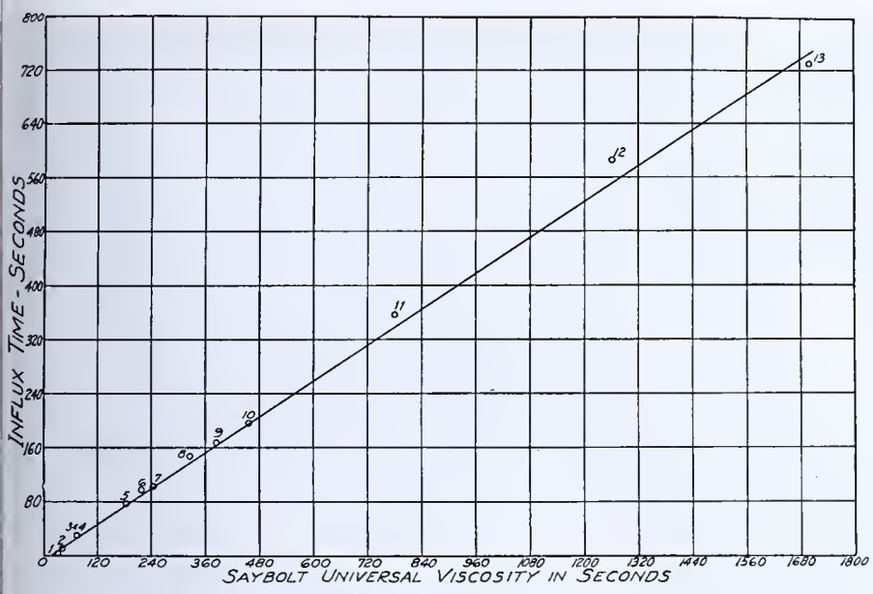

FIGURE 4

As the actual capacity of the capillary viscometer to the top mark is 1.1 cu. mm., 5 mg. of oil in the oil reservoir would be ample for a test, if the apparatus were so calibrated. To check a determination, it is only necessary to clean the viscometer and return it to the oil left in the reservoir. The removal of the 1 mg. of sample contained in the viscometer has no appreciable effect on the depth of oil left in the conical reservoir, and the check test may therefore be made without the necessity of cleaning the reservoir and replenishing the oil. When not actually in use, the capillary viscometer is held above the oil reservoir by means of a piece of partially split rubber tubing (Figure 1, *A*).

When the capillary viscometer is clean and all conditions are correct, there is a definite relationship between the three line times, and when this relationship exists for the sample it is known that conditions were right. The time of rise to these three points is noted only for a check on conditions. Table I shows the ratios of line times for the author's particular capillary viscometer, as well as the data on which his curves are based. They can be determined for another by using a series of oils of known viscosities, as he did.

It was not the author's experience that many difficulties were caused by dirt clogging or lodging in so fine a tube as this capillary viscometer. The apparatus was promptly cleaned after each test; the oil reservoir by rinsing in hot benzene, followed by acetone, and blowing with air to dryness; the capillary viscometer by immersing the narrow end in a test tube of hot benzene, drawing the liquid through by application of vacuum to the other end, following with a wash of clean benzene, then with acetone, and finally sucking air through to dryness. When not in use, the apparatus is protected from dust.

Acknowledgment

The author wishes to acknowledge his appreciation of the helpful criticisms of Louis C. Roess.

Literature Cited

(1) Lidstone, F. M., *J. Soc. Chem. Ind.*, 54, 189T (1935).
(2) Schneider, H. F., Jr., and McConnell, T. A., IND. ENG. CHEM., Anal. Ed., 8, 28 (1936).
(3) Washburn, E. W., *Phys. Rev.*, 17, 273 (1921).

RECEIVED November 18, 1936.

Microchemical Analysis of Pigments

Used in the Fossae of the Incisions of Chinese Oracle Bones

A. A. BENEDETTI-PICHLER
Chemical Laboratories of Washington Square College, New York University, New York, N. Y.

THE chief find of archeological excavation at the Yin Hsü site near Anyang, in northern Honan province, consists of a mass of inscriptions incised upon turtle plastrons and bovine scapulas, ascribed to the Shang epoch which is conventionally dated from 1766 to 1122 B. C. Turtle plastrons and bones were used in divination. The omens were read from cracks made by scorching pits in the bone or shell. Shoulder-blade divination was widespread in Asia, but the use of turtle shell represents a special development, and the engraving of the oracular reports upon the oracular bone and shell seems to be distinctive of the royal court of Shang. Many of the specimens still retain black or red color pigments in the fossae of the incisions.

The pigments of two specimens belonging to the Princeton University collection were investigated on request of Roswell S. Britton of the Department of Mathematics, Washington Square College, who pointed out that the red pigment is assumed to consist of cinnabar while the black pigment is thought to be the blood of animals used in divination.

To obtain samples of the pigments without damage to the objects, the oracle bones were mounted on the stage of a binocular microscope (40× total magnification), and a Leitz

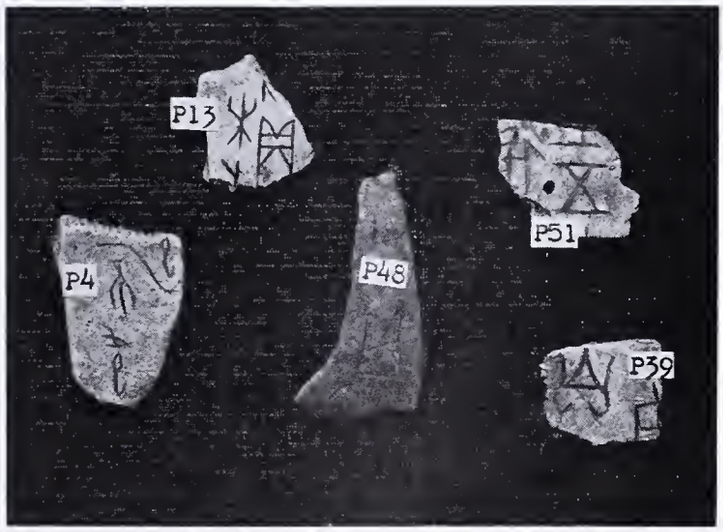

FIGURE 1. CHINESE ORACLE BONES OF THE PRINCETON UNIVERSITY COLLECTION, 3/4 NATURAL SIZE

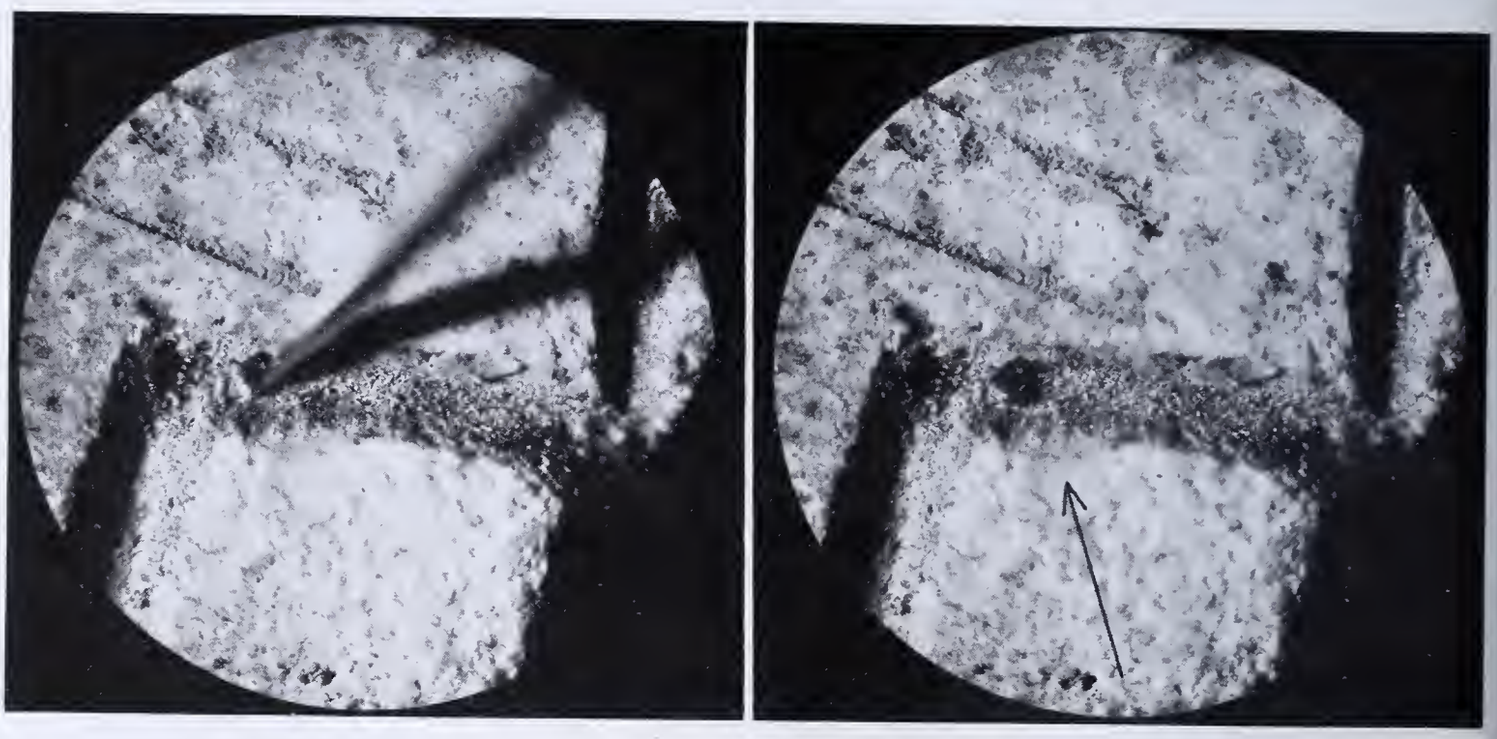

FIGURE 2. LOOSENING OF RED PIGMENT, 20×

Left, steel needle prying pigment loose
Right, loosened pigment indicated by arrow

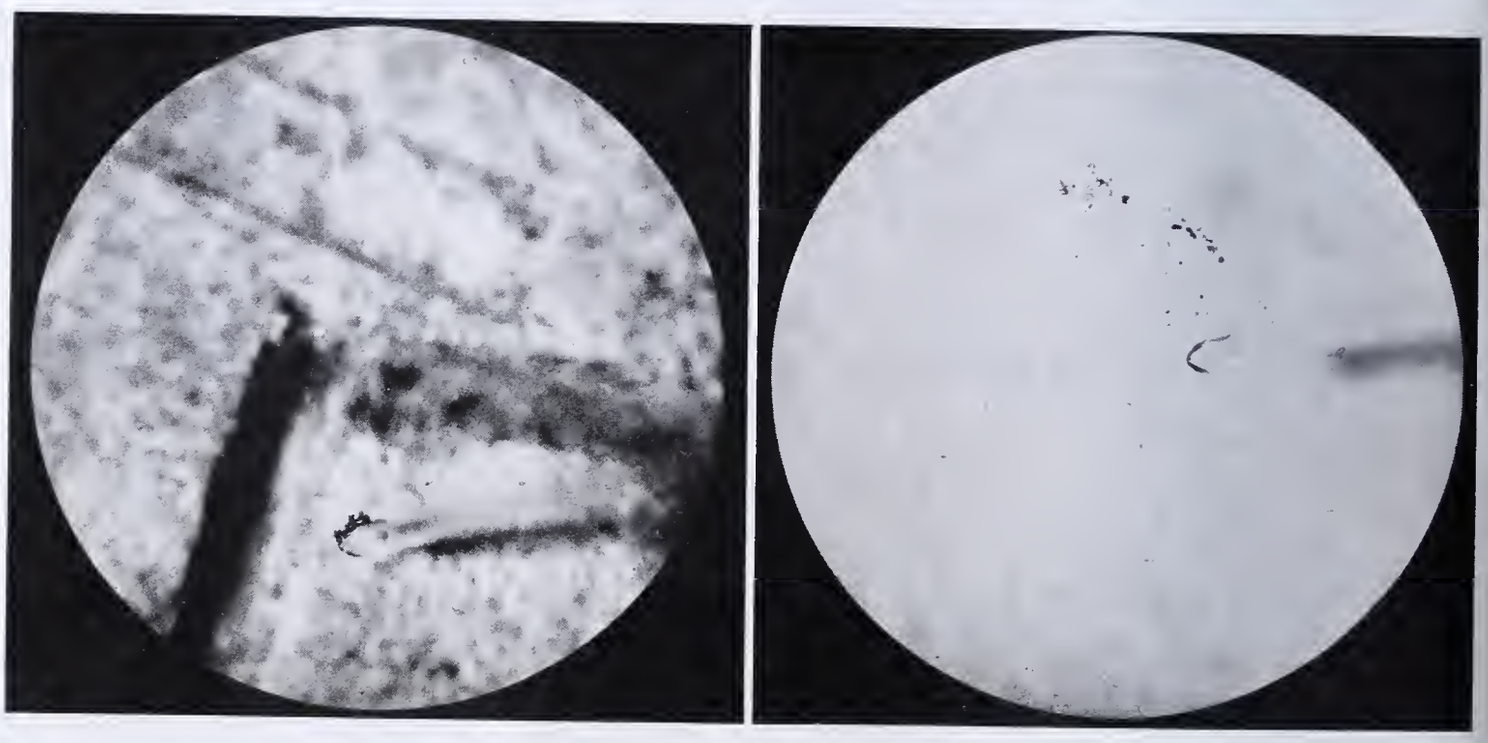

FIGURE 3. MANIPULATION OF RED PIGMENT, 20×

Left, pigment attached to glass thread visible above surface of oracle bone
Right, pigment collected in drop of water

simplified manipulator, allowing motions in the three directions with the use of rack and pinion, was used to remove small quantities of the pigment. The analysis of the red pigment will be used to give a detailed account of the procedure.

Analysis of Red Pigment

Specimens P39 and P51 (Figure 1) showed this red pigment of the characteristic color of cinnabar in the incisions. The sample for analysis was taken from specimen P39 from the first horizontal bar just below the label. Comparison of Figures 1 and 2 will permit the determination of the exact location.

First, a steel needle mounted in the manipulator was used to break loose a small amount of the pigment (Figure 2, left). Figure 2, right, shows the small cluster of pigment particles loosened by the needle. The microscope is focused on the pigment in the incision and not on the surface of the bone. The steel needle was then exchanged for a glass thread, the point of which was treated with a trace of glycerol so as just to give a surface film (*1*, *3*). On touching the loose pigment particles with the point of the glass thread, they become attached to the latter and can be safely removed. Figure 3, left, shows the point of the glass thread with particles of pigment attached to it. Now the specimen was removed from the stage of the microscope, and a glass slide carrying a drop of 0.3 cu. mm. of water was put in its place. After focusing on the drop, the point of the glass thread was lowered into the drop. Contact of the thread with

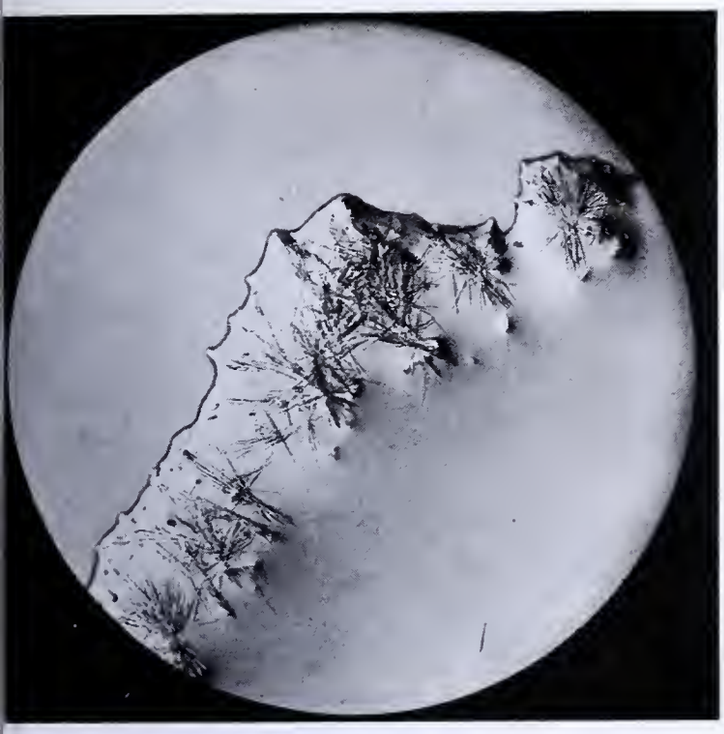

FIGURE 4. CRYSTALLIZATION OF CALCIUM SULFATE, 100×

he water caused the particles of pigment to float off (Figure 3, ght).

Microscopic examination (80×) of the pigment showed that t consisted of a mixture of red particles and of colorless to ellowish particles which latter showed distinct birefringency. Neither kind of particle was attacked by cold hydrochloric cid. This test was carried out by inverting the slide and lacing it on the opening of a bottle containing 13 *M* hydrohloric acid in such a way that the droplet with the particles n it could absorb hydrogen chloride from the gas space of he bottle.

Since color and solubility of the red pigment pointed toward innabar, it was decided to apply a confirmatory test without further preliminaries. To this end the droplet containing the pigment particles was allowed to evaporate, after covering the slide with a larger beaker to protect it from dust. A drop of 1 cu. mm. of 1 per cent calcium chloride solution was then added to the particles, which remained behind collected in a circular area of approximately 2-mm. diameter. The slide was inverted and placed upon the opening of a bromine water bottle, so that the droplet of calcium chloride solution with the pigment particles hung into the gas space of the bottle. After 5 minutes the drop assumed a brown coloration due to an excess of bromine dissolved.

The slide was removed from the bromine water bottle, and the preparation examined under the microscope. All of the red pigment particles had disappeared, while the yellowish and colorless particles remained unchanged by the action of the bromine. These latter birefringent particles are probably quartz or silicate minerals. After a short time crystals of $CaSO_4 \cdot 2H_2O$ appeared along the edge of the droplet. Figure 4 shows the appearance of this test. However, this photomicrograph was taken from a test made for the purpose of comparison on a small particle of elementary sulfur. The crystallization of calcium sulfate after oxidation and solution of the red pigment by bromine indicates the presence of sulfur in the pigment (*2*).

The test drop was allowed to evaporate completely. For the detection of mercury according to Emich (*3*), the residue was dissolved in 2 cu. mm. of 3 *M* hydrochloric acid, the solution taken up in a capillary, and there treated with a 1-mm. length of fine copper wire. After heating in the water bath for 5 minutes, the amalgamation of the copper wire was noticeable with the unaided eye. The wire was removed from the capillary, placed on a piece of filter paper, and there washed with a few drops of water. The washings were absorbed by the filter paper used to support the wire. Finally the wire was dried by pressing between filter paper, and then transferred into a dry capillary tube. Application of heat caused the mercury to distill off the wire. The condensate of mercury droplets obtained in the finely drawn-out part of the capillary tube was inspected under the microscope. Figure 5, left, shows the distillate obtained in the actual test by illumination with transmitted light while Figure 5, right, shows the same portion of the capillary tube in reflected light over a black background.

The characteristic hue of the red pigment, its insolubility in strong hydrochloric acid, and the detection of approximately equivalent quantities of sulfur and mercury in the bromine water solution prove beyond doubt that the red pigment consists of mercuric sulfide.

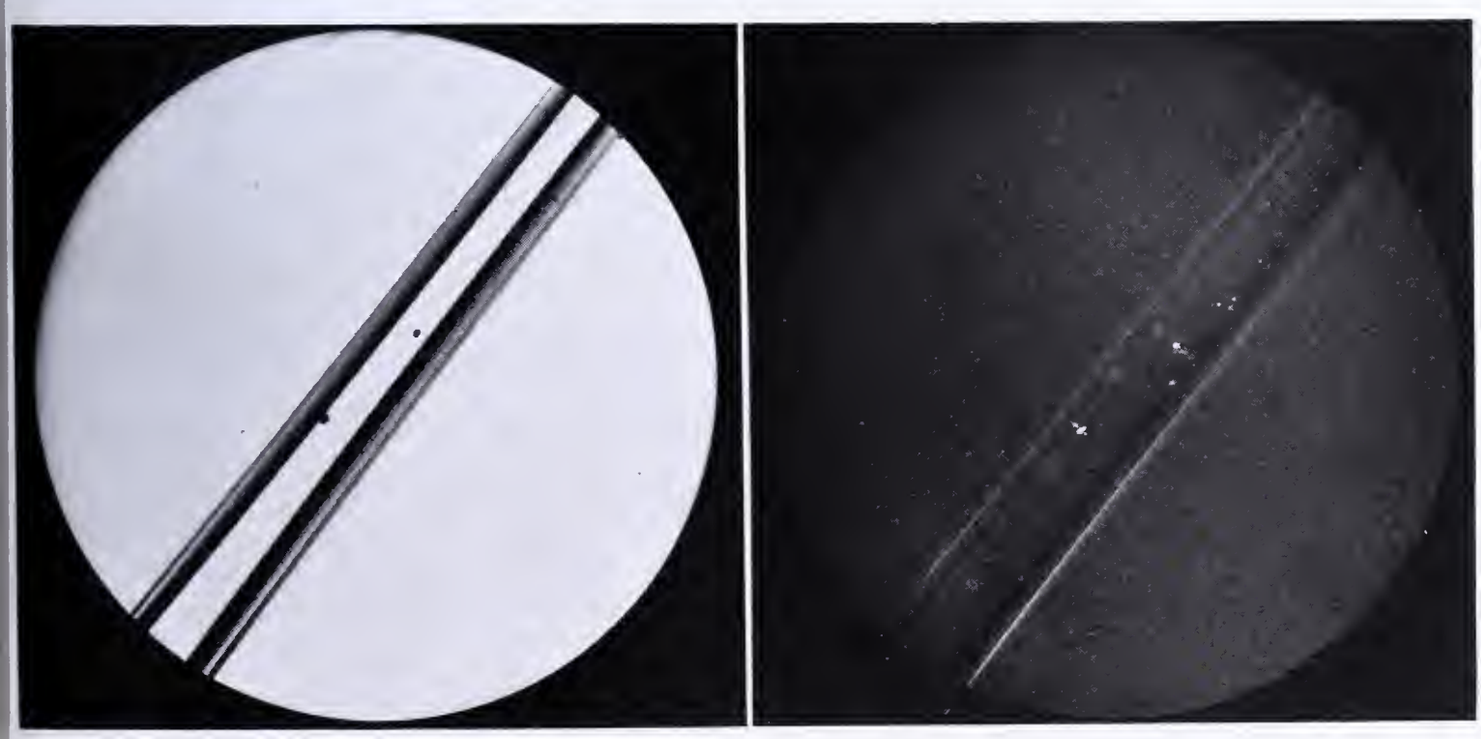

FIGURE 5. DISTILLATE OF MERCURY, 50×

Left, transmitted light
Right, reflected light and black background

Analysis of Black Pigment

The black pigment employed on specimens P4, P13, and P48 (Figure 1) was analyzed with the use of the technic described above. The black pigment, like the red pigment, appears mixed with the same colorless anisotropic matter, quartz or silicate, possibly loess in which the fragments have been buried for centuries. The black pigment seems to have been partially destroyed, since the content of black pigment particles varies considerably in the different specimens. The pigment of P13 appeared distinctly black, while the pigment of P48 should have been designated rather as grayish white. The difference is apparent in Figure 1. Specimen P13 was selected for the analysis of the pigment, and samples were taken from the large symbol in the right-hand corner of the specimen.

One sample was transferred into a droplet of water and treated with hydrochloric acid and bromine; these reagents were without action. After evaporation of the test droplet, the material was again carefully examined under the microscope and then ignited. On ignition the color of the black particles changed to white. A test for sulfur tried on another sample gave a negative result. Other samples were treated with sodium hydroxide solution and with glacial acetic acid; neither reagent had any solvent action on the black pigment.

According to these findings it may be assumed that the black pigment consists of some carbonaceous matter. Negative results with the hemin test of Teichman are not conclusive as far as the origin of this carbonaceous matter is concerned.

Value of Microchemical Method

The above report on the analysis of the pigments found in the incisions of Chinese oracle bones, Yin bones, may serve to demonstrate the use of those microchemical methods which have been termed classical. The amount of material required for such simple analysis may be judged from Figure 3. For the case under discussion, the claim can be made without hesitation that so little material was used for chemical analysis that even microscopic inspection of the specimens would be unable to prove that such an analysis had ever been carried out.

Literature Cited

(1) Benedetti-Pichler, A. A., and Spikes, W. F., "Introduction to the Microtechnique of Inorganic Qualitative Analysis," Douglaston, N. Y., Microchemical Service, 1935.
(2) Emich, F., *Z. anal. Chem.*, 32, 163 (1893).
(3) Emich, F., and Schneider, F., "Microchemical Laboratory Manual," New York, John Wiley & Sons, 1932.

RECEIVED January 5, 1937. Presented before the New York Section of the American Chemical Society, December 11, 1936.

ANALYTICAL EDITION

INDUSTRIAL and ENGINEERING CHEMISTRY

Harrison E. Howe, Editor

Determination of Carbon Monoxide in Air

ADAM A. CHRISTMAN, WALTER D. BLOCK, AND JULIUS SCHULTZ
University of Michigan Medical School, Ann Arbor, Mich.

THE most commonly accepted methods for the determination of carbon monoxide in air are so well described elsewhere (*1*, *5*, *8*, *11*) that only a brief mention of them will be made in this paper. The iodine pentoxide method, which depends upon the liberation of iodine when the dried gas mixture containing carbon monoxide is passed over heated iodine pentoxide, is probably one of the most accurate and sensitive. Accurate results, however, can be obtained by this method only by skilled analysts, who appreciate the many sources of error in each step of the method, from the preparation of a suitable sample of iodine pentoxide to the final iodine titration. Moreover, because of the time required to season the iodine pentoxide and establish reliable blank determinations, this method is not convenient if only an occasional determination of carbon monoxide is to be made.

Because of the toxicity of carbon monoxide in relatively low concentrations, a simple method, which may be used for the detection and quantitative determination of from 1 to 10 parts per 10,000 parts of air, should be of great value. The authors believe that analysis by the method described can be made with a minimum of special apparatus, without undue technical difficulties, and with an accuracy approaching that of the iodine pentoxide method. The time required for the laboratory manipulations for check determinations is less than 1 hour, and concentrations of carbon monoxide which would prove toxic if breathed for a period of 1 hour, may be detected qualitatively in a few minutes. A rough quantitative measure of the carbon monoxide, based on the time required for the qualitative test, is also obtained in the same procedure.

Principle of Present Method

The air under examination is brought in contact with palladium chloride and if carbon monoxide is present, the following reaction occurs: $CO + PdCl_2 + H_2O = Pd + CO_2 + 2HCl$. Böttger (*3*) was the first to use palladium chloride for the detection of carbon monoxide, and it has since been used by various workers, notably C. Winkler (*12*) and Brunck (*4*), for the quantitative determination of carbon monoxide. These latter authors were interested in the measurement of relatively high concentrations of carbon monoxide and calculated their results from the weight of metallic palladium formed in the above reaction. More recently, however, L. Winkler (*13*) has utilized this reaction for the determination of carbon monoxide in concentrations comparable to those given in the present work. By his procedure, the metallic palladium formed in the reaction is treated with bromine in excess of that required to form palladium bromide and the excess bromine is determined by titration. A recent Bureau of Mines publication (*2*) has reviewed the detection and semiquantitative determination of carbon monoxide by ampoules containing palladium salt solution.

In the present method, a definite volume of palladium chloride solution is exposed to the air containing carbon monoxide and after the reaction of carbon monoxide and palladium chloride is completed, the excess of the chloride is separated from the metallic palladium by filtration, and the palladium chloride is determined colorimetrically. The addition of potassium iodide, in excess of that required to precipitate the palladium chloride as palladous iodide, dissolves the latter salt to give a red solution, which, in the presence of a protective colloid such as gum ghatti, remains perfectly clear for at least 24 hours. This procedure for the colorimetric determination of palladium chloride was employed by Christman (*6*) for the determination of carbon monoxide in blood.

Reagents

GUM GHATTI SOLUTION. Five grams of gum ghatti are added to 500 cc. of distilled water and allowed to stand for 24 to 48 hours with occasional shaking. After filtration, a clear solution results which appears to keep indefinitely, although it becomes slightly turbid on standing and must be refiltered from time to time.

ALUMINUM SULFATE. A 10 per cent solution.

POTASSIUM IODIDE. A solution containing 15 grams of this salt per 100 cc. of solution. Since this solution develops a yellow tinge on standing, only enough for immediate use is prepared.

PALLADIUM CHLORIDE SOLUTION. Five hundred milligrams of palladium chloride (Baker and Company) dried at 100° C. for 1 hour are placed in a 400-cc. beaker and covered with 150 cc. of distilled water, 2.5 cc. of concentrated hydrochloric acid are added, and the mixture is heated until complete solution of the palladium chloride results. After cooling, this solution is transferred to a 500-cc. volumetric flask and made up to volume. Analysis of the resulting solution by the standard gravimetric procedure, which consists of the precipitation of palladium in acid solution as the salt of dimethylglyoxime (*9*), indicated that the palladium chlo-

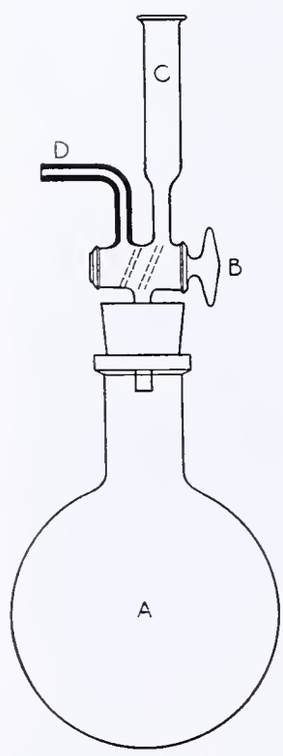

FIGURE 1. APPARATUS

ride was 99.5 per cent pure. It is advisable, if large volumes of this solution are made, to store it in a number of well-stoppered, small bottles rather than in one large bottle, to minimize the deterioration due to exposure to air and dust when samples are removed for use.

Procedure

The apparatus required for this determination is shown in Figure 1. Flask *A* is a 500-cc., round-bottomed, short-necked Pyrex flask, fitted through a one-hole rubber stopper with a two-way stopcock, *B*. The volumes of these flasks with the stopcocks in position must be determined, and for convenience in calculation, it is desirable that these flasks be of approximately the same volume. The flasks used in the present work varied in volume from 528 to 532 cc. One of the upper outlets of the stopcock is fitted with a small reservoir, *C*, which has a capacity of approximately 7 cc. The second upper outlet of the stopcock, *D*, extends upward for 2 to 3 cm. and is then bent at right angles away from the reservoir for another 2 to 3 cm. The lower outlet of the stopcock is cut off at approximately 4.5 cm. and protrudes through the lower surface of the stopper far enough (0.5 to 1.0 cm.) to ensure the passage of palladium chloride into the flask without contact with the stopper. The inside diameter of tube *D* should be less than 1.5 mm.

The flasks are attached to a vacuum pump, connected with a manometer evacuated to less than 1 mm. of pressure, and the stopcocks are closed. There is no appreciable change in the pressure within these flasks at the end of 24 hours, provided the stopcocks are properly ground and greased and all rubber connections are tightly fitted. Stopcocks that do not meet these requirements should not be used. Lubricants which contain ingredients that react with palladium chloride must not be used. Lubriseal (Arthur H. Thomas Company) has proved satisfactory. The samples of gas for analyses are obtained by opening the stopcocks of several of these evacuated flasks until equilibrium with the air to be analyzed is attained. Tube *D* of the flask containing the sample to be analyzed is connected by pressure tubing with tube *D* of an evacuated sample flask of approximately the same volume. The stopcocks are now turned so that the contents of the two flasks are brought into equilibrium. After a few seconds, the stopcocks are closed and the flasks are disconnected.

Three cubic centimeters of the palladium chloride solution and 0.2 cc. of the aluminum sulfate solution are introduced into reservoir *C* and quantitatively transferred to the flask by three 1-cc. washings of distilled water. Care is taken at all times to prevent the access of air into the flask. The flask is now shaken gently at various intervals for the next 2 hours, particularly during the period when the major part of the metallic palladium is forming, to prevent the formation of a layer of metallic palladium on the surface of the liquid which will prevent the free access of the carbon monoxide to the palladium chloride. The presence of aluminum sulfate facilitates the flocculation of the colloidal palladium. After the period of shaking, the flasks are allowed to stand at least 4 hours before the determination is completed; in most of the authors' work, the flasks were allowed to stand overnight or for 24 hours. In comparative studies, the results for the 6-hour period of reaction were sometimes identical with those obtained for the longer period, and in other cases, slightly lower. The differences, however, are so small that for practical work the shorter period of reaction is recommended.

The excess of palladium chloride is now quantitatively separated from the metallic palladium by filtration into 50-cc. volumetric flasks. The volume of liquid in the 50-cc. flasks, after the apparatus and filter paper have been thoroughly washed, is usually 25 to 30 cc. If the filter paper is satisfactory, this solution should be perfectly clear. Schleicher and Schüll 5.5-cm., No. 589 Blue Ribbon, or Whatman No. 40 filter paper has proved very satisfactory for this filtration. Two cubic centimeters of gum ghatti are added to the solution and mixed, and 5 cc. of 15 per cent potassium iodide are added directly to the solution with shaking. Since it has been found that small amounts of palladium chloride are adsorbed by the filter paper, these last traces of palladium chloride are removed by washing the filter twice with 2-cc. portions of the potassium iodide solution and once with a 1-cc. portion. Each washing with potassium iodide solution is followed by small volumes of distilled water. These washings are filtered directly into the colored solution already in the volumetric flask and the contents of the flask are finally made up to volume. A trace of caprylic alcohol added to the flask will minimize the foaming due to the gum ghatti.

The standard for the colorimetric comparison is prepared by the addition of 2 cc. of the palladium chloride solution, 25 cc. of water, 2 cc. of gum ghatti solution, and 10 cc. of 15 per cent potassium iodide to a 50-cc. volumetric flask. The last solution is added with shaking and the resultant solution made up to volume. The color produced by the addition of potassium iodide reaches maximum intensity in a few minutes and remains constant for at least 24 hours. The standard color is set at 20 mm.

Sample Calculation. The volume of the sampling flask and the flask with which it was equilibrated was 530 cc. The sample of air was taken at 23° C. and 744 mm. pressure. From the colorimetric determination, it was calculated that 1.582 mg. of palladium chloride had been reduced by carbon monoxide. This reduction was due to the carbon monoxide in 265 cc. of air, since the flasks to which palladium chloride was added were at a pressure of 0.5 atmosphere. One milligram of palladium chloride is reduced by 0.1261 cc. of carbon monoxide at 0° C. and 760 mm. pressure. Therefore:

$$1.582 \times 0.1261 \times \frac{760}{744} \times \frac{296}{273} \times \frac{10{,}000}{265} = 8.34 \text{ parts of carbon monoxide per 10,000 parts of air}$$

In the above equation, $\frac{0.1261 \times 760 \times 10{,}000}{273 \times 265}$, which is equal to 13.25, will appear in all calculations. Therefore, the simplified equation

$$13.25 \times \frac{\text{absolute temperature at which sample was taken}}{\text{barometric pressure in mm. at which sample was taken}} \times \text{milligrams of palladium chloride reduced} = \text{parts of carbon monoxide per 10,000 parts of air}$$

may be used. The value for the first term of this equation will vary with the volume of the flask used in the analysis.

Blank Determinations. Various amounts of metallic palladium were mixed with known volumes of palladium chloride in flasks as shown in Figure 1. The separation of the palladium chloride from the metallic palladium and the subsequent colorimetric determination of the palladium chloride were made as previously described. There was always a small loss of palladium chloride, which was greater in the presence of larger amounts of metallic palladium. Since such a loss of palladium chloride would yield slightly too high results for carbon monoxide, correction factors must be subtracted. If 0.5, 1.0, 1.5, and 2.0 mg. of palladium chloride are reduced, subtract from the final values, as calculated above, 0.19, 0.28, 0.33, and 0.38 part of carbon monoxide, respectively. Occasionally, as pointed out below, when the content of carbon monoxide is high, it is desirable to divide the sample a second time, so that only one-quarter of the original sample is represented in the actual analysis. In such a case, the blanks given above would be doubled.

Results

To check the accuracy of the method, definite volumes of an analyzed sample of carbon monoxide were transferred from an accurately calibrated gas pipet to an evacuated sample flask. Air, free of carbon monoxide, was then allowed to enter the flask until equilibrium was established. The flask was then equilibrated with an evacuated flask of equal volume and the analysis completed as previously described. A typical series of results, given in Table I, represents analyses made during a period of 2 weeks from a carefully analyzed sample of carbon monoxide after the analytical procedures had been well standardized, and has been corrected for blanks as previously described. The average recovery of carbon monoxide is 95 per cent.

To check the accuracy of the method further, comparative analyses were made by this method and the iodine pentoxide method.

Five-liter samples of gas were used for the latter method; the gas was dried by passage over anhydrone and phosphorus pentoxide before it reached the iodine pentoxide. The iodine pent-

oxide was prepared by the method of Lamb, Bray, and Geldard (*10*) and supported on granulated pumice. The oil bath containing the iodine pentoxide tube was maintained at a temperature of 160° to 165° C. All glass connections were used from the point of entry of the gas into the iodine pentoxide tube to the 10-bulb iodine absorption pipet. The iodine was titrated with 0.01 *N* sodium arsenite with all necessary precautions. Blank determinations were made before and after each analysis.

The results of the comparative analyses, given in Table II, indicate a good agreement between the two methods. In general, analyses 1 to 6, in which the gas mixture consisted of carbon monoxide and nitrogen, were somewhat higher by the present method than by the iodine pentoxide method. However, for gas mixtures prepared by mixing carbon monoxide with air, analyses 7 to 10, inclusive, and the garage air samples, analyses 11 and 12, the values obtained by the present method are 94 to 99 per cent of that of the iodine pentoxide method. These latter values are in agreement with the recoveries of carbon monoxide when known volumes of the gas were measured and analyzed (Table I).

Table I. Analysis of Measured Volumes[a] of Carbon Monoxide by the Palladium Chloride Method

Experiment	Present	Found	Recovery
	Cc.	*Cc.*	%
1	0.056	0.054	96
2	0.073	0.069	95
3	0.107	0.102	95
4	0.130	0.129	99
5	0.151	0.141	93
6	0.153	0.145	95
7	0.186	0.175	94
8	0.204	0.196	96
9	0.212	0.200	94
10	0.244	0.227	93
11	0.267	0.250	94
12	0.298	0.289	97
13	0.334	0.327	98
14	0.386	0.357	93
15	0.421	0.405	96
			Av. 95

[a] The volumes of gas indicated in column 2 were transferred quantitatively from the gas buret to the evacuated 500-cc. gas-analysis flasks. Air was then allowed to enter until equilibrium was established. By this means samples of air containing from 1 part of carbon monoxide per 10,000 parts of air (expt. 1) to 8 parts per 10,000 (expt. 15) were available for analysis.

The lower values by the present method as compared to the iodine pentoxide method for samples 7 to 12, inclusive, are due to the interference of oxygen in the reduction of palladium chloride by carbon monoxide. This was demonstrated in numerous experiments in the following manner:

After the gas sample had been divided between two flasks, and the palladium chloride, aluminum sulfate, and water had been added, air, free of carbon monoxide, was allowed to enter one flask until equilibrium was established. The reaction of carbon monoxide with the palladium chloride was allowed to proceed in the second flask at a pressure of 0.5 atmosphere. In every case, the values for carbon monoxide in the latter flask were from 5 to 10 per cent higher than in the flasks in which the reaction of palladium chloride and carbon monoxide occurred at atmospheric pressure. To determine why the lower values for carbon monoxide were obtained in the flasks to which air had been admitted, pure oxygen and nitrogen were substituted for air in experiments similar to that just described. The values for carbon monoxide obtained after the admission of oxygen were 20 to 25 per cent lower than control determinations made in the usual manner. The values obtained after the admission of nitrogen were only 2 to 3 per cent lower than those of control experiments. These results indicated that the major interference in the reaction of palladium chloride with carbon monoxide, when air is admitted into the reaction flask to bring it to atmospheric pressure, is due to oxygen rather than to nitrogen. To minimize this interference of oxygen, all reactions have been carried out at pressures of 0.5 atmosphere or less.

A rough correlation which is valuable for qualitative work may be made between the concentration of carbon monoxide in air and the time required for the first appearance of the metallic palladium. For 10, 8, 6, 4, and 2 parts of carbon monoxide per 10,000 parts of air, under the experimental conditions previously described, the first appearance of the metallic palladium is approximately 5, 12, 17, 35, and 60 minutes, respectively. These are average values obtained from numerous observations. Individual variations in check determinations are sometimes as great as 5 minutes. Such a qualitative test is of great value, however, because concentrations of carbon monoxide greater than 10 parts per 10,000, which would be dangerous to breathe for a period of 1 hour, form a black scum of metallic palladium on the surface of the yellow palladium chloride in a short time. The above values are based on reactions at normal laboratory temperatures (20° to 25° C.). Berger and Yant (*2*) have shown that the rate of reaction of palladium chloride and carbon monoxide is retarded at temperatures below 10° C.

If one has no knowledge of the approximate concentration of carbon monoxide in the gas under examination, the sample is divided in the usual manner and palladium chloride, aluminum sulfate, and water added to only one of the flasks. If the appearance of the metallic palladium is so immediate as to suggest a concentration higher than 10 parts per 10,000, the flask at half atmospheric pressure, to which no reagents have been added, may be equilibrated with an evacuated flask, thus obtaining samples containing one-quarter of the original sample. The reagents may again be added to only one of these flasks to determine whether an additional division of the sample is desirable before the quantitative procedure is carried out.

Gases, other than carbon monoxide, react with palladium chloride. The unsaturated hydrocarbons such as acetylene and ethylene, as well as hydrogen, will reduce palladium chloride to metallic palladium and hydrogen sulfide will precipitate palladium chloride as the sulfide. The sensitivity of palladium chloride solutions to reduction by hydrogen depends upon their method of preparation. Daller (*7*) has noted that distinctly acid palladium chloride solutions are less sensitive to hydrogen reductions than buffered solutions. L. Winkler (*13*) observed no reduction of his palladium chloride solution with a 1 per cent hydrogen mixture, but did observe some reduction with a 5 per cent concentration of hydrogen. Since his preparation of palladium chloride was buffered with sodium acetate, its sensitivity to reduction by hydrogen cannot be compared with the acid solution of palladium chloride used in the present work. Five hundred cubic centimeters of air containing 0.25, 0.50, 1.0, and 2.0 cc. of pure hydrogen were shaken with 3 cc. of palladium chloride solution, prepared as previously described, without evidence of reduction in 24 hours. Palladium chloride, on the other hand, exposed to ethylene in concentrations of 6 to 8 parts per 10,000, gave evidence of reduction after 3 to 4 hours.

If the air under examination contains unsaturated hydrocarbons or hydrogen sulfide in amounts which would yield high results for carbon monoxide, these interfering substances may be effectively removed by successive passage of the gas through a scrubber solution of bromine water and a 33 per cent potassium hydroxide solution. The bromine solution is prepared by adding one volume of water to two volumes of saturated bromine water. To every 100 cc. of this mixture are added 5 grams of potassium bromide. In the present work, to ensure the formation of small bubbles of gas and permit efficient washing, aeration tubes of sintered glass were used.

Prior to taking a sample for analysis, the gas under examination must be forced through the scrubber solutions until the gas above these solutions has been replaced. The gas is then drawn through the scrubber solutions into the analysis flask at a slow rate to ensure complete absorption of the interfering substances. The rate of passage must also be slow to ensure the complete removal of bromine vapor by the alkali. After the air has stopped bubbling through the absorbent

solutions, an atomizer bulb is attached and air is forced through the solutions, and into the analysis flask until a slight positive pressure within the flask is obtained. The flask is then disconnected from the scrubber system and the stopcock opened momentarily to allow the flask to come to atmospheric pressure. In the analyses reported in experiments 11 and 12, Table II, the air was washed in the manner just described. Several samples of the air (experiment 11), without washing, indicated a content of 6.48 parts of carbon monoxide per 10,000 parts of air, as compared to 6.43 for the washed sample. This would indicate that for the analysis of garage air, the removal of interfering substances is not necessary for practical control work.

Table II. Comparative Analyses for Carbon Monoxide in Gas Mixtures[a]

(All results are expressed as parts of carbon monoxide per 10,000 parts of air.)

Experiment	Present Method	Iodine Pentoxide Method
1	1.38	1.30
2	2.46	2.69
3	5.61	5.25
4	7.02	7.00
5	7.93	7.90
6	10.36	9.90
7	2.10	2.09
8	6.25	6.60
9	7.64	8.10
10	11.90	12.10
11	6.43	6.75
12	4.16	4.20

[a] Experiments 1 to 6, inclusive, represent analyses of carbon monoxide in carbon monoxide and nitrogen mixtures; 7 to 10, inclusive, analyses of carbon monoxide in carbon monoxide and air mixtures, and 11 and 12, analyses of carbon monoxide in a gas mixture taken from a closed garage in which a motor was in operation.

Many laboratories may not be equipped with a vacuum pump which will evacuate a flask to 1 mm. of pressure as recommended. If the sampling flasks can be partially evacuated by a foot pump or water pump to a known reduced pressure, the volume of gas obtained for analysis by opening the stopcock at the site of examination may be readily calculated. Moreover, if it is not necessary to pass the gas through scrubber solutions, a sample of air may be taken by the displacement method—i. e., an analysis flask filled with water may be emptied at the site of examination and the flask restoppered. If the flasks with which these sample flasks are equilibrated in the analytical procedure are evacuated to 20 to 25 mm. instead of 1 mm., the pressure within the flasks, after the sample has been divided, is slightly greater than 0.5 atmosphere. Since, as pointed out previously, reactions carried out at full atmospheric pressure were only 5 to 10 per cent lower than those at half atmospheric pressure, the results should be but slightly lower than those obtained by the procedure recommended above.

Summary

A comparatively simple procedure requiring very little special apparatus is described for the determination of carbon monoxide in air. The method is based primarily on the fact that palladium chloride is reduced by carbon monoxide and the excess of palladium chloride which is present is determined colorimetrically after addition of potassium iodide.

Acknowledgment

A grant from the Faculty Research Fund to support this research project is gratefully acknowledged. The authors also wish to express their appreciation to William Fredericks of the Department of Chemistry for his coöperation in the analyses made by the iodine pentoxide method.

Literature Cited

(1) Am. Gas Assoc., "Gas Chemist's Handbook," 3rd ed., pp. 289–315, New York, 1929.
(2) Berger, L. B., and Yant, W. P., *U. S. Bur. Mines Rept. Investigations* 3030 (1930).
(3) Böttger, R., *J. prakt. Chem.*, 76, 233–5 (1859).
(4) Brunck, O., *Z. angew. Chem.*, 25, 2479–81 (1912).
(5) Burrell, G. A., and Seibert, F. M., and Jones, G. W., *Bur. Mines Bull.* 197, 63–70 (1926).
(6) Christman, A. A., and Randall, E. L., *J. Biol. Chem.*, 102, 595–609 (1933).
(7) Daller, W., *Z. anal. Chem.*, 103, 83–8 (1935).
(8) Dennis, L. M., and Nichols, M. L., "Gas Analysis," rev. ed., pp. 232–54, New York, Macmillan Co., 1929.
(9) Hillebrand, W. F., and Lundell, G. E. F., "Applied Inorganic Analysis," pp. 281–2, 292–3, New York, John Wiley & Sons, 1929.
(10) Lamb, A. B., Bray, W. C., and Geldard, W. J., *J. Am. Chem. Soc.*, 42, 1636–48 (1920).
(11) Lunge, G., and Ambler, H. R., "Technical Gas Analysis," 2nd ed., pp. 226–40, London and Edinburgh, Gurney and Jackson, 1934.
(12) Winkler, C., *Z. anal. Chem.*, 28, 269–78 (1889).
(13) Winkler, L., *Ibid.*, 97, 18–27 (1934); 100, 321–4 (1935).

Received December 4, 1936.

The Preparation of Thin Films

T. P. SAGER
National Bureau of Standards, Washington, D. C.

VARIOUS means which have been suggested for the preparation of thin films of rubber and similar materials include their deposition on glass, porcelain, sheet metal, and mercury. The use of rigid surfaces is open to the objection that in the case of some materials the adhesion of the film may be troublesome. The removal from such surfaces, of films of materials which are subject to permanent deformation on stretching, tends to lessen the uniformity of their thickness. In connection with the study of the permeability to gases of thin films unsupported by fabric, a satisfactory and simple method was found for their preparation.

Regenerated cellulose sheeting, extensively employed for wrapping purposes, is used as the base upon which the films are deposited. For this purpose it is essential to employ sheeting which has not been coated with a moisture-proofing composition. The material is held taut between closely fitting steel hoops. The film-forming materials are applied in the form of their solutions in volatile solvents. Uniformity of film thickness is obtained by using dilute solutions and a plurality of coats. After the solvents have evaporated and, when necessary, the deposited film has been cured at elevated temperatures, the uncoated surface of the regenerated cellulose is covered with water. Within a short time the film may be readily loosened and removed without any appreciable stretching or other damage.

This method of preparation is obviously suitable only for films of materials not appreciably affected by moisture. Thin films of rubber, Thiokol, Neoprene, cellulose derivatives, and oleoresinous varnishes were successfully prepared in this manner. The length of time that the film is in contact with the moist regenerated cellulose is not sufficient, with these materials, to produce any change in their appearance.

Received February 20, 1937. Published by permission of the Director of the National Bureau of Standards, U. S. Department of Commerce.

Absorption of Hydrogen in Liquid Reagents

A New Solution for the Analytical Determination of Hydrogen in Gas Mixtures

DONALD T. BONNEY WITH WILBERT J. HUFF
Department of Gas Engineering, Johns Hopkins University, Baltimore, Md.

TECHNICAL methods of gas analysis for the determination of hydrogen in general use in the United States depend almost universally upon procedures employing explosion or combustion. Of these, the fractional combustion over copper oxide (*6, 7, 16, 17, 20, 21, 25–29, 31*) or the "slow combustion" (*9, 10, 18, 30*) over a glowing platinum spiral is generally preferred. The chief disadvantage of the copper oxide method is the time required for the determination, during which the operation must be constantly attended.

The "slow combustion" method, while accurate under proper control, is not satisfactory when more than one hydrocarbon is also present in the mixture, and is generally restricted to the determination of methane and ethane. The manipulations required are exacting and the danger of an explosion must constantly be guarded against.

While a number of absorption methods involving liquid reagents have been proposed, the use of these has been limited. Dilute palladium chloride solutions (*8, 24*), sodium oleate solutions containing finely divided activated nickel (*1, 3*), sodium chlorate solutions in contact with a palladium activator (*13, 14, 15*), and silver permanganate solution (*11*) have been suggested. The reactions involved have, however, generally been deemed slow or unsatisfactory or the preparation of the reagent and apparatus troublesome and expensive.

Among the methods previously advanced, the most satisfactory appears to be that of Paal and Hartman (*23*), who employed a sodium picrate solution containing a very active and stable palladium colloid (*22*). In accuracy, it has been shown by a number of investigators (*2, 4, 5, 12*) to be equal or superior to combustion methods. It is, however, time-consuming, a single determination requiring as high as 30 minutes. Furthermore, the absorbent is expensive, because of the high palladium colloid content, and with high concentrations of hydrogen it is soon spent. Brunck (*4*) suggested the use of a higher sodium picrate content, and also advanced a method for recovering the palladium catalyst from the spent solution.

For simplicity and ease of operation, an automatic pumping pipet has been developed in the laboratories of this department. This frees the operator from the necessity for constant vigilance and so minimizes the objections raised against the time required, and by setting up more favorable contact conditions between the solution and the gaseous mixture increases the rate of absorption. These desirable features suggested the use of reagents hitherto considered too sluggish to be practicable and so directed attention to the determination of hydrogen by liquid reagents.

While the method of Paal and Hartman (*23*) appeared to be the most satisfactory of those hitherto advanced, it was soon recognized that it would be desirable to replace the sodium picrate with a substance having a higher rate of absorption and having also the property of being readily reoxidized to its original form without affecting the palladium catalyst, thereby giving a much longer life.

Preliminary Experiments

A rapid preliminary study, largely qualitative in nature, was made on a variety of materials. Among the inorganic substances, sodium metavanadate catalyzed by colloidal palladium showed some activity. To this mixture other metals were added, including silver, cerium, thorium, molybdenum, tungsten, uranium, and manganese. Molybdenum solutions when used alone gave some promise. A ferric citrate–colloidal palladium solution showed an absorption slightly greater than did the palladium colloid alone.

The colloid used was a sodium protalbinate–palladium colloid prepared in a manner essentially similar to that of Paal and Amberger (*22*).

Preparations

SODIUM PROTALBINATE. Fifty grams of powdered egg albumin were added slowly with stirring to 250 cc. of a 3.0 per cent sodium hydroxide solution. The mixture was heated at 95° to 100° C. on a water bath with occasional stirring, until practically all the albumin had dissolved. During this digestion considerable ammonia was evolved. The solution was filtered to remove impurities, chiefly inorganic salts. The filtrate was then made slightly acid with 6 *N* acetic acid, the protalbinic acid being precipitated. After settling for 12 hours the precipitated protalbinic acid was made into a thin paste with water and dialyzed for 3 days with distilled water in a Cellophane sack.

The purified protalbinic acid was dissolved by the addition of excess sodium hydroxide solution and again dialyzed until

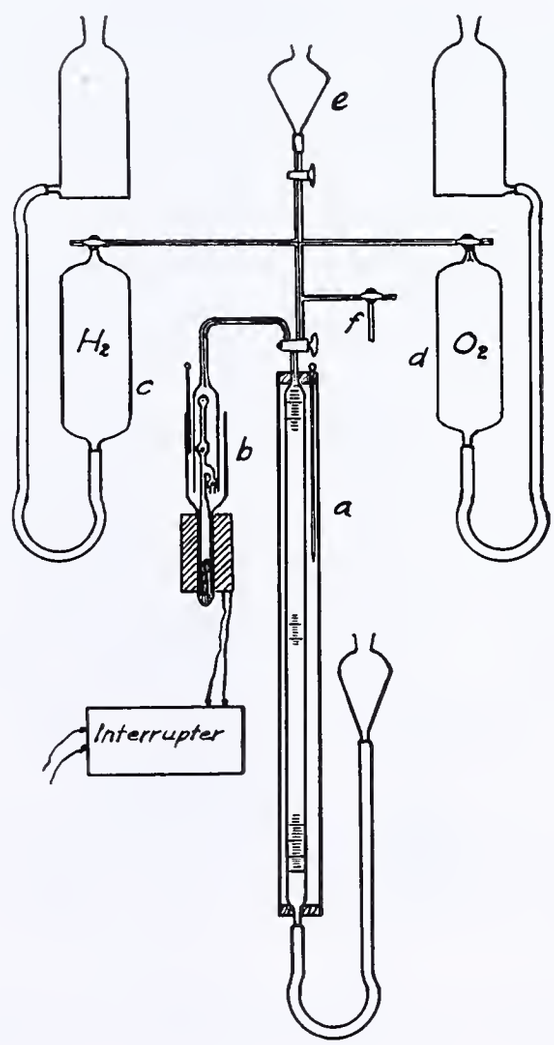

FIGURE 1. APPARATUS FOR ACTIVITY TESTS

neutral to litmus. The resulting sodium protalbinate solution was evaporated to a small bulk at 60° to 70° C. and then precipitated and freed from water by several successive additions of 95 per cent alcohol. The sodium protalbinate was further dried in a desiccator. Yield, 14.6 grams or 29.2 per cent.

Sodium Protalbinate-Palladium Colloid. Three grams of sodium protalbinate were dissolved in 50 cc. of water and sufficient sodium hydroxide was added to combine with the chlorine of the palladium chloride. The palladium chloride solution, containing 4 grams of palladium chloride (2.0 grams Pd) in 70 to 80 cc. of water, was added slowly while stirring. A yellow-red precipitate first formed but redissolved. An excess of hydrazine was added drop by drop while stirring and the solution was then allowed to stand for several hours. The resulting solution was dialyzed with distilled water in a Cellophane sack until neutral to litmus and free from chlorides. During dialysis the solution increased in volume considerably because of osmosis. The colloid, thus freed from salts, was evaporated to dryness at 60° to 70° C. and further dried in a desiccator.

The palladium colloid preparation was obtained in the form of glistening black plates, soluble in water and alkaline solutions.

Early in the investigation, it was recognized that organic compounds having a quinoid structure might prove satisfactory, because of their ability to shift readily back and forth between the quinone and the hydroquinone forms on alternate oxidation and reduction. A serious difficulty in the use of the simple quinones is their extremely low solubility in water. However, 1,2-naphthoquinone and a number of the anthraquinone sulfonates are soluble to some extent. Accordingly, the use of these was investigated. The 1,2-naphthoquinone solutions tested decreased gradually in activity, but good results were obtained with the anthraquinone sulfonates.

Absorption of Hydrogen by Anthraquinone–Colloidal Palladium Solutions

As the preliminary tests had shown the solution containing sodium anthraquinone disulfonates to be promising, the course of the investigation was directed toward the development of this reagent for use in standard gas analysis.

Preparation of Anthraquinone Disulfonates. It is, of course, desirable to have the organic material which undergoes alternate reduction and oxidation present in a high concentration if possible. The solubilities of the various disulfonates of anthraquinone vary widely, depending upon the position in the molecule assumed by the sulfonic acid radicals. According to Lauer (*19*), the 2,7-sodium anthraquinone disulfonate is very much more soluble than the others, and the procedure followed in the synthesis was designed to favor a high yield of the disulfonates and particularly the 2,7-compound. The isolation of any particular salt was considered unnecessary. The procedure followed in the sulfonation was, in general, similar to that of Lauer. At a later date it was found that sodium 2,7-anthraquinone disulfonate or the corresponding disulfonic acid is offered in an impure state by commercial sources.

Absorption Apparatus. The apparatus employed for measuring the rate of absorption of hydrogen by solutions, shown diagrammatically in Figure 1, was designed to simulate the conditions of routine analysis as much as possible.

It consists essentially of a water-jacketed buret, *a*, an absorption pipet, *b*, hydrogen and oxygen reservoirs, *c* and *d*, and a reservoir of flushing liquid, *e*. A second pipet could be attached at *f* when desired, either for the storage of nitrogen or for the absorption of gases other than hydrogen. Acidulated salt water was used as the flushing liquid and as the confining liquid in the buret.

As previously mentioned, the usefulness and convenience of procedures for the analytical absorption of hydrogen in liquid reagents had been enhanced by the development of an automatic pumping pipet. Accordingly, the determinations were usually made in a pipet of this kind, shown diagrammatically in Figure 2.

The pumping mechanism consists of the solenoid, *a*, glass-enclosed iron plunger *b*, valves *c* and *c'*, spray bulb *d*, and timing device *e* to make and break the circuit of the solenoid. When the circuit to the solenoid is closed the plunger rises, forcing the reagent up through tube *f*. Valve *c* is forced shut, *c'* opens, and the reagent is sprayed against the walls of the pipet. When the current to the solenoid is broken the plunger falls, valve *c'* closes, and *c* opens, allowing fresh reagent to be drawn in above the plunger. The removal of solutions and cleansing of the pipet were facilitated by constructing the pipet in three sections. Upon removal of the top section, the pumping mechanism can be lifted out and all parts readily drained and washed. During the study of the effect of temperature on the activity of the reagent, the pipet was cooled or heated by means of the water bath, *h*. Heat was supplied by an immersion heater consisting of a coil of resistance wire enclosed in Pyrex tubing.

When it was desired to operate out of contact with air, the upper and lower sections of the pipet were sealed by a rubber ring containing the thermometer and a rubber gas bag, such as is generally employed to prevent access of air to the back chamber of the usual absorption pipet.

Determination of Activity of Reagent. The production of the crude disulfonates of anthraquinone by laboratory syntheses gives a mixture of compounds. Accordingly, a number of preparations were made and examined to obtain as active a solution as conveniently possible and to determine the duplicability of the results.

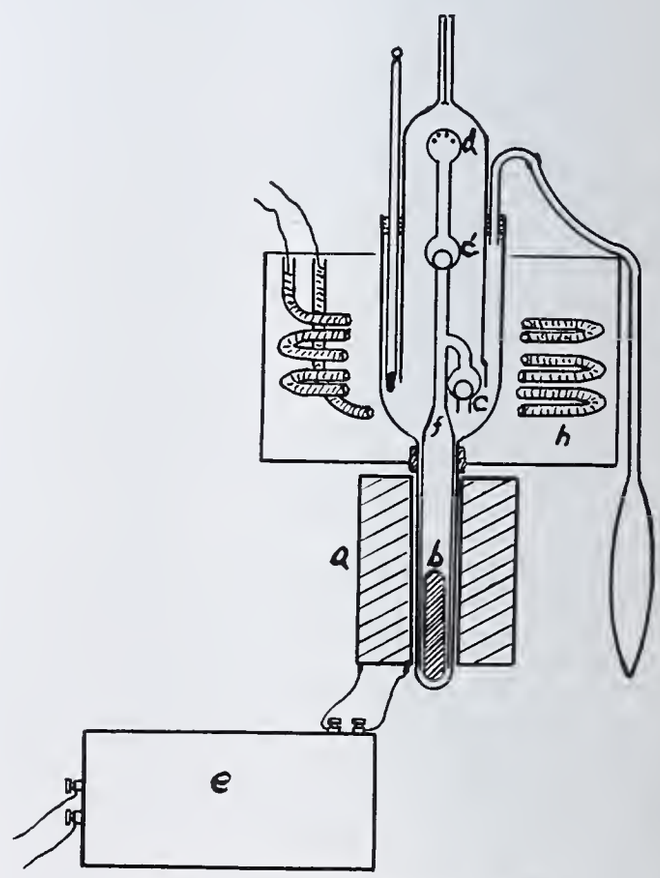

Figure 2. Pipet for Activity Tests

The values for the sodium anthraquinone disulfonate content include soluble impurities which may result from the preparation, including, of course, important amounts of sodium chloride. The tests were carried out as follows:

The sample of hydrogen, usually about 100 cc., was measured in the buret and 50 cc. were then transferred to the absorption pipet. The pipet was closed, a stop watch started, and the circuit for the pumping device closed. After 4 minutes, the pumping action was stopped and the unabsorbed hydrogen

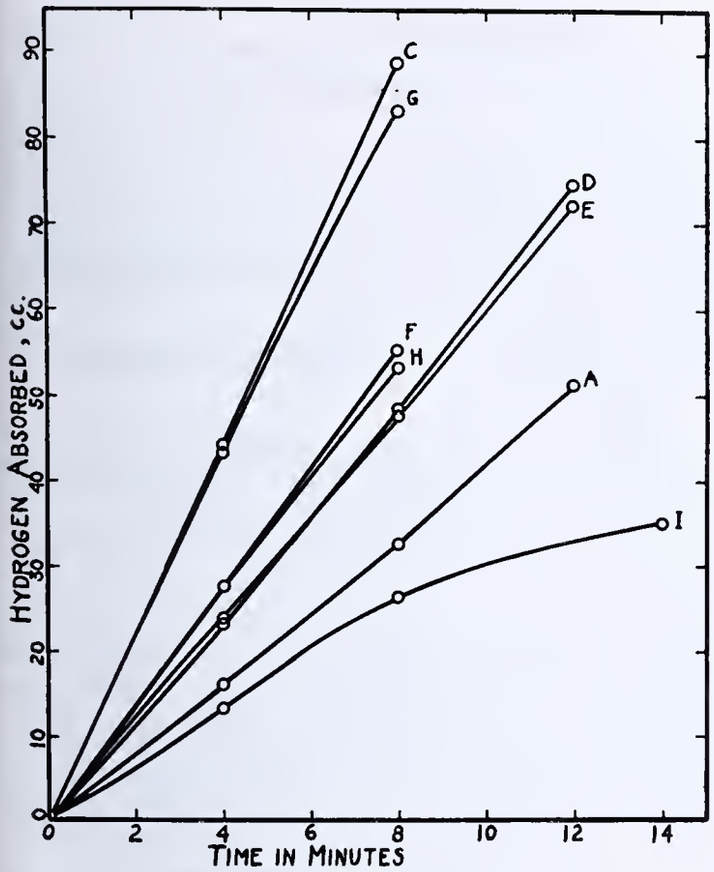

FIGURE 3. HYDROGEN ABSORPTION ACTIVITY OF ANTHRAQUINONE–PALLADIUM COLLOID SOLUTIONS

(Letters on curves correspond to those shown in Table I.)

drawn back into the buret and measured. The period of 4 minutes was chosen because in most cases it gave convenient absorption values. The maximum amount that could be absorbed in any one run was 50 cc. In all tests the current of the solenoid circuit was held constant and the speed of the pumping action adjusted to 33 to 34 strokes per minute. The temperature of the solution was read during each run. The solutions were revivified by oxygen between tests unless otherwise indicated.

SUMMARY OF ACTIVITY TESTS. A summary of the absorption rates of tests of a number of solutions prepared is shown in Table I. In order to present the data as briefly as possible, only one value of the absorption rate for each solution is given. The value selected is that for the maximum rate which was obtained at a temperature approaching as closely as possible 25° C. The low absorption values for solutions D, F, E, and A are probably due to high sodium chloride content in the anthraquinone, resulting in false values for the weight of sodium anthraquinone disulfonate. Moreover, the composition of the colloidal palladium employed in some of the earlier solutions was doubtful, as trouble was sometimes experienced in securing a completely soluble product.

The activity of the solutions given in Table I is shown graphically by Figure 3, in which the volume of hydrogen absorbed is plotted against the absorption time.

COMPARISON OF ABSORPTION RATES WITH PUMPING AND BUBBLING PIPET. As indicated, this reagent was intended primarily for use with the pumping pipet employed in the tests of Table I. However, because of the limited extent to which this type of pipet has been applied, a comparison of the absorption rates of the anthraquinone reagent in a pipet more generally employed should be of interest. As the bubbling pipet is commonly employed in technical gas analysis, this type was selected for the comparison (similar to Fisher Scientific Company No. 10-645). In recent years a number of modifications of the bubbling pipet have been made, many of which appreciably increase the rate of absorption. In this study, however, it was considered advisable to restrict the comparison to a single type, so the simple bubbling pipet was selected, as it is probably the most generally used.

Although the reagent used (solution F) was of rather low activity, satisfactory comparative values were obtained, as slight errors in time did not appreciably affect the absorption values. In the absorption tests with the bubbling pipet the time was noted both for the actual bubbling period and for the total elapsed time, as an appreciable amount of time is required to withdraw the hydrogen after each pass.

The results of the comparison of the absorption rate with the two types of pipet were as follows:

	Cc./min.
Automatic pumping pipet	4.76
Bubbling pipet, actual bubbling time	3.85
Bubbling pipet, total time	2.30

COMPARISON OF ABSORPTION RATE OF ANTHRAQUINONE REAGENT WITH SODIUM PICRATE REAGENT. Although the sodium anthraquinone disulfonate reagent was developed principally to give a life longer than that of the Paal and Hartman reagent by virtue of the fact that it may be readily reoxidized, it also offers the advantage of a greater activity. This is demonstrated by the comparison of the absorption rates of the two solutions:

	Cc./min.
Anthraquinone reagent (solution C)	9.30
Paal and Hartman's sodium picrate reagent	2.85

VARIATION OF ACTIVITY WITH TEMPERATURE. An increase in the activity of the reagent with increasing temperature was to be expected from the behavior of palladium black and the sodium picrate–palladium colloid solution of Paal and Hartman. The variation of activity with temperature was studied over the range of 10° to 35° C. employing two reagents (solutions C and F). In this range the increase of activity averaged 2.8 cc. or 26 per cent per 10° temperature rise. A decrease in activity was noted in each case after heating to above 35° C. Upon subsequent removal of the solutions, a portion of the palladium was found to have precipitated, indicating that the reagent becomes unstable at 35° to 40° C. This is, however, no serious disadvantage for, although the activity does increase with temperature, the rate of increase hardly warrants the complication and expense required when means for heating the solution is introduced.

Determination of Hydrogen in Gas Mixtures

In order to establish the value of the anthraquinone–palladium colloid reagent, the behavior of the reagent toward mixtures of hydrogen with the various other gases commonly encountered in technical analysis was next examined. These mixtures included hydrogen and oxygen, hydrogen and nitrogen, hydrogen and saturated hydrocarbons, hydrogen and carbon monoxide, and hydrogen and carbon disulfide.

TABLE I. SUMMARY OF ACTIVITY TESTS

Solution	Composition Sodium anthraquinone disulfonate *Grams*	Palladium *Grams*	Maximum H_2 Absorption Rate *Cc./min.*	Temp. *° C.*
C	15.0	1.0	11.07	23.5
G	16.0	1.0	10.44	29.5
D	18.7 (NaCl?)	0.7	6.23	26.0
F	38.0 (NaCl?)	1.8	6.68	27.5
E	10.0 (NaCl?)	0.7	6.01	24.3
A	8.0 (NaCl?)	0.7	4.21	25.0
H	9.0 grams sodium nitro anthraquinone sulfonate	1.9	6.50	23.0
I	(Pd alone)	1.0	3.30	29.0

Hydrogen and Oxygen. Hydrogen and oxygen are simultaneously absorbed by the anthraquinone reagent at a rate higher than their individual absorption rates. In the case of detonating gas ($2H_2 + O_2$) the rate is extremely rapid and no change takes place in the anthraquinone reagent. Unless the concentration of one of them is known, however, determinations of a mixture of hydrogen and oxygen can give only the total content of both gases. The simultaneous absorption of hydrogen and oxygen may be advantageous in certain procedures.

Hydrogen and Nitrogen. The determination of hydrogen in hydrogen-nitrogen mixtures of varying composition is shown in Figure 4. The determinations were made employing the most active solutions, C and H, which had been prepared according to the method adopted as being the most satisfactory. The time necessary for the determination of hydrogen in gaseous mixtures varies from about 2 minutes for low concentrations up to 10 minutes for a concentration of 50 per cent. For the usual gaseous mixtures encountered in routine analysis, the hydrogen concentration is seldom much above 50 per cent.

Table II. Analyses of Natural Gas

	Hydrogen Found by		
	Anthraquinone–palladium colloid reagent		Copper oxide tube (Bureau of Mines apparatus)
	%	%	%
C_nH_{2n}	0.8	1.0	0.8
O_2	0.8	1.0	1.0
H_2	3.0	3.0	2.9
C_nH_{2n+2} and N_2	95.4	95.0	95.3

Hydrogen and Saturated Hydrocarbons. In technical gas analysis, in accordance with the usual sequence, the hydrogen would be determined in the presence of saturated hydrocarbons and nitrogen. The behavior of the reagent with hydrogen-saturated hydrocarbon mixtures was therefore examined. From analogy with the behavior of the Paal and Hartman solution it was expected that the anthraquinone reagent would be satisfactory for the determination of hydrogen in the presence of saturated hydrocarbons.

This was verified by the results shown in Table II, using in one case the anthraquinone reagent for the hydrogen determination in natural gas and in the other the fractional combustion of the same gas mixture over copper oxide.

Effect of Carbon Monoxide and Carbon Disulfide on the Activity of Reagent

Carbon monoxide and organic sulfur compounds are important catalyst poisons frequently present in industrial gases. Accordingly, the effect of the presence of carbon monoxide and carbon disulfide upon the activity of the reagent was investigated. The results of this study may be briefly summarized as follows:

Carbon Monoxide. (1) Hydrogen and carbon monoxide may be removed simultaneously by the anthraquinone–palladium colloid reagent. (2) The absorption rate is extremely slow because of the poisoning effect of carbon monoxide. (3) Upon complete revivification with oxygen the reagent regains its original activity.

Carbon Disulfide. Carbon disulfide acts as a powerful poisoning agent for both the absorption of hydrogen and the subsequent revivification with oxygen. However, after standing in contact with air for a period of from 2 to 3 weeks the reagent regains its original activity. A concentration (2.3 per cent) of carbon disulfide very much higher than that found in gases for public utility work was employed in this test to exaggerate the effect of the low concentrations in industrial gases.

Capacity, Life, and Revivification of Reagent

Capacity. Although the reagent has the advantage of being readily reoxidized by contact with oxygen or air, it is necessary for it to have some capacity for absorbing hydrogen. The greater the capacity, of course, the greater will be the number of hydrogen determinations possible before revivification becomes necessary. A test was therefore carried out to determine the volume of hydrogen that could be absorbed before the solution became too sluggish for use. During this test the reagent was sealed from the atmosphere by the rubber ring and gas bag previously mentioned. The volume of the reagent was 120 cc.

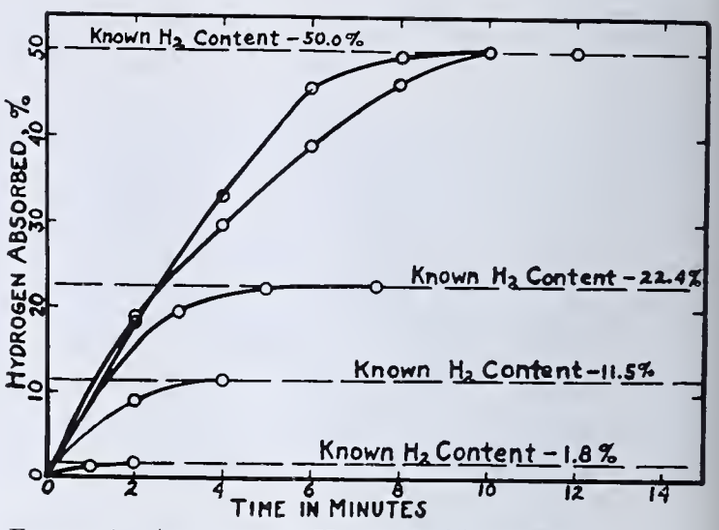

Figure 4. Analyses of Hydrogen-Nitrogen Mixtures, Solution C

The results of this test are shown in Figure 5. It is seen that the hydrogen absorption rate is still satisfactory after 800 cc. have been absorbed.

Revivification and Life of the Reagent. The revivification of the anthraquinone reagent by oxygen or air has been mentioned frequently. Some data showing the rate and completeness of the revivification are of interest, as it affects so greatly the life, and thereby the economy, of the reagent. The rate of revivification, as would be expected, varies with the amount of the reduced material present and the oxygen concentration. During the determination of the hydrogen absorption rates under the various conditions set up in the study of the reagent, the solutions were kept in a highly oxidized state in order to eliminate the effect of the degree of reduction. Under this condition, not necessary in practice, the revivification proceeds rather slowly. It may be said, conservatively, that with a corresponding state of reduction, the rate of oxygen absorption during revivification is as great as that of hydrogen absorption, and probably exceeds it. Apparently, the influence of the hydrogen-ion concentration upon the rate of revivification is also important.

That complete revivification may be effected has been shown repeatedly throughout the investigation by the absorption of oxygen volumes during revivification equivalent to the hydrogen previously absorbed.

The ability of the reagent to be completely revivified suggests the possibility of a long life. Of the solutions so far prepared, all but two have been removed from operation in order to recover the palladium for use with other preparations and for no other reason. The two exceptions suffered loss of activity due to precipitation of the palladium by excessive temperatures purposely used during the study of the variation of activity with temperature. It so happened that these solutions (C and D) were subjected to the greatest number of hydrogen absorption tests. Solution C, whose volume was 120 cc., absorbed a total volume of 2708 cc. Prior to the drop in activity at elevated temperature, 2250 cc. of hydrogen had been absorbed with no loss in activity. The loss of activity after the absorption of 2708 cc. amounted to 10 per cent.

Solution D, whose volume was 120 cc., had absorbed a volume of 2860 cc. before it was subjected to excessive temperature with a resulting loss of activity. However, after the precipitated palladium colloid was filtered out and replaced by fresh colloid, the solution was continued in use, and absorbed approximately 2000 cc. more of hydrogen.

Although the effect of long standing has not been thoroughly studied, a comparatively inactive solution (solution A) had stood from January 9 to September 20 without apparent loss of activity or precipitation of the colloid.

Application of Reagent to Standard Gas Analysis Practice

Activity of Reagent in a Standard Size Pumping Pipet. With the standard 200-cc. automatic pumping pipet the activity of the reagent is somewhat increased, owing to the greater surface exposed. Thus, with pure hydrogen the value of the maximum absorption rate for solution C is 14.5 cc. per minute in comparison to 10.8 cc. per minute with the small pipet employed in most of the activity tests.

Use in Routine Gas Analysis. From this investigation the anthraquinone–palladium colloid reagent appears, at present, to offer a satisfactory method for the determination of hydrogen in routine gas analysis. Its use may be limited to some extent, however, by the type of apparatus employed: It would probably not be applied to apparatus of the Bureau of Mines type equipped with copper oxide tube, as this apparatus would require the addition of at least two extra pipets, one for the hydrogen reagent and one, or perhaps two, for the carbon monoxide reagent. From the standpoint of both time and accuracy it would be undesirable to restrict the use of the copper oxide tube in this apparatus to the determination of carbon monoxide.

The application of this reagent seems feasible with apparatus of the types of the United States Steel Corporation, Bone and Wheeler, the Elliott, the Illinois modification of the Morehead (equipped with slow combustion pipet), Hempel, Sheppard, and the Bureau of Mines type equipped with the extra absorption pipets and without the copper oxide tube. In the analysis of gases of low hydrogen and carbon monoxide content, the use of this reagent appears to be preferred to the fractionation over copper oxide.

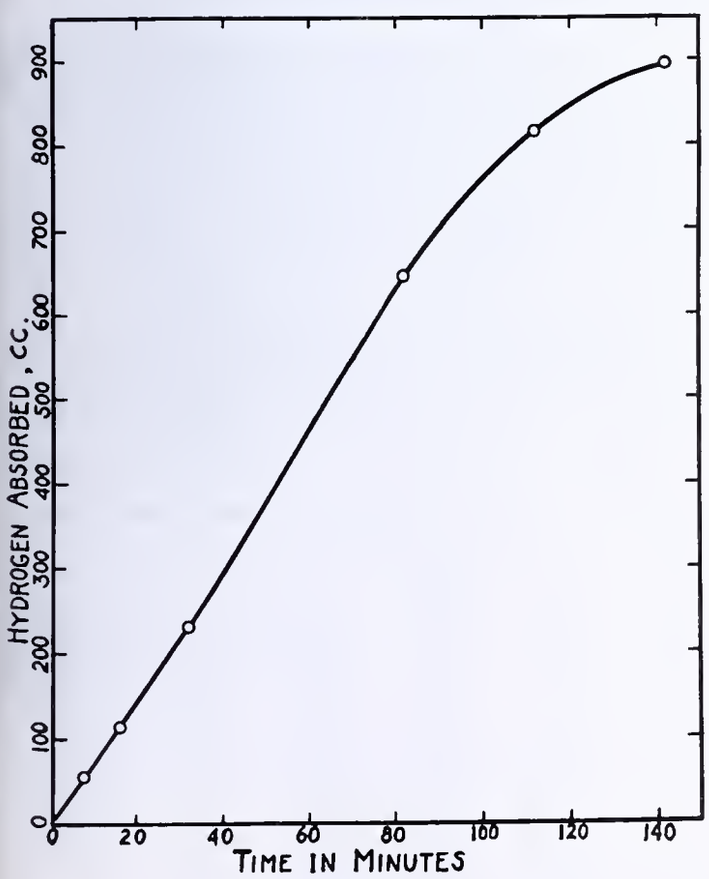

Figure 5. Hydrogen Absorption Capacity of Reagent, Solution C

Further Development

In order to be economic the methods of preparation should be reduced to a production routine and, if possible, simplified. An investigation of the effect of the variation in alkalinity must be carried out. It appears that the hydrogen-ion concentration controls to a marked degree the rate of absorption of both hydrogen and oxygen and the tendency of the reagent to foam. An increase in the foaming tendency with use was attributed to the absorption of carbon dioxide from the air with accompanying increase in hydrogen-ion concentration. Upon addition of a small amount of sodium hydroxide, no foaming occurred. In the case of the two most active reagents, solutions C and H, the foam broke immediately upon stopping the pumping action.

Summary

The literature concerning the various liquid reagents which have been proposed for the determination of hydrogen has been reviewed and a brief criticism of such methods has been made.

A new reagent has been developed, consisting of an aqueous solution of sodium anthraquinone 2,7-disulfonate and colloidal palladium peptized by an alkaline albumin compound, sodium protalbinate. This reagent has the advantage of being readily revivified by contact with oxygen or air, assuring active hydrogen absorption over long periods of operation.

The characteristics of the reagent, with particular reference to its application to routine gas analysis, have been studied and may be summarized as follows:

1. The reagent is more active than any liquid reagent tested by the authors for the determination of hydrogen. With pure hydrogen the absorption rate, in a suitable gas-analysis pipet, is about 15 cc. per minute.
2. The reagent operates satisfactorily at room temperature.
3. Hydrogen may be determined accurately in the presence of nitrogen and saturated hydrocarbons. The absorption is complete.
4. In routine analysis carbon dioxide, unsaturates, oxygen, and carbon monoxide should be removed prior to the hydrogen determination.
5. Although temporarily poisoned by carbon monoxide and carbon disulfide, the reagent regains its activity upon standing in contact with oxygen or air.
6. Hydrogen and oxygen may be removed simultaneously.
7. The reagent appears to remain active after standing several months and appears to be unaffected by light.
8. The capacity is sufficient to care for a number of determinations before revivification becomes necessary. The spent reagent is completely and simply revivified by contact with air or oxygen.

Literature Cited

(1) Anderson and Katz, J. Ind. Eng. Chem., 10, 23 (1918).
(2) Beet, *Fuel*, 7, 44 (1928).
(3) Bossard and Fischeli, *Z. angew. Chem.*, **28**, I, 365 (1915).
(4) Brunck, *Chem.-Ztg.*, 34, 1313, 1334 (1910).
(5) Burrell and Oberfell, J. Ind. Eng. Chem., 6, 992 (1914).
(6) *Ibid.*, 8, 228 (1916).
(7) Campbell, *Am. Chem. J.*, 17, 688 (1895).
(8) Campbell and Hart, *Ibid.*, **18**, 294 (1896).
(9) Coquillon, *Compt. rend.*, 83, 394 (1876); **84**, 458, 1503 (1877).
(10) Dennis and Hopkins, *J. Am. Chem. Soc.*, **21**, 398 (1899).
(11) Hein and Daniel, *Z. anorg. allgem. Chem.*, **181**, 78 (1929).

(12) Hempel, *Z. angew. Chem.*, 25, 1841 (1912).
(13) Hoffman, *Ber.*, 49, 1650, 1663 (1916).
(14) Hoffman and Ebert, *Ibid.*, 49, 2369 (1916).
(15) Hoffman and Schneider, *Ibid.*, 48, 1585 (1915).
(16) Hurst and Rideal, *J. Chem. Soc.*, 125, 685 (1924).
(17) Jäger, *J. Gasbeleucht.*, 41, 764 (1898).
(18) Kaleta, *Chem.-Ztg.*. 45, 651 (1921).
(19) Lauer, *J. prakt. Chem.*, 130, 185 (1931).
(20) Nielson, *Fuel*, 3, 204 (1924).
(21) Ott, *J. Gasbeleucht.*, 62, 89 (1919).
(22) Paal and Amberger, *Ber.*, 37, 124, 2195 (1904); 38, 1401 (1905).
(23) Paal and Hartman, *Ibid.*, 43, 243 (1910).
(24) Phillips, *Am. Chem. J.*, 16, 254 (1894).
(25) St. John, *J. Phys. Chem.*, 33, 1438 (1929).
(26) Taplay, *J. Gas Lighting*, 118, 217, 285 (1912).
(27) Taylor, J. Ind. Eng. Chem., 6, 845 (1914).
(28) Terres and Manguin, *J. Gasbeleucht.*, 58, 8 (1915).
(29) Ubbelohde and de Castro, *Ibid.*, 54, 810 (1911).
(30) Weaver and Ledig, J. Ind. Eng. Chem., 12, 368 (1920).
(31) Wibaut, *Chem. Weekblad*, 11, 498 (1914).

Received December 15, 1936. Presented before the Division of Gas and Fuel Chemistry at the 89th Meeting of the American Chemical Society, New York, N. Y., April 22 to 26, 1935. The experimental material of this paper is abstracted from a dissertation presented to the Board of University Studies of the Johns Hopkins University by Donald T. Bonney in partial fulfillment of the requirements for the degree of doctor of philosophy, June, 1935.

A Spectrophotometric Method for the Determination of Iron in Ores

J. P. MEHLIG, Oregon State College, Corvallis, Ore.

The spectrophotometric method employing the molecular extinction coefficient has been satisfactorily applied to the determination of iron, by measuring the transmittancy of light at given wave lengths through the system consisting of the amethyst-colored complex formed by the addition of salicylic acid to ferric ions in acetic acid solution.

VARIOUS constituents, either naturally colored or forming colored systems with appropriate reagents, may be determined colorimetrically by means of visual or photoelectric comparison with colorimetric standards consisting of known amounts of the constituent being measured or of some other system equivalent in color. Another colorimetric method involves the use of a spectrophotometer, with which known solutions may be used to construct a curve coördinating transmittancy of light of a given wave length and concentration of the constituent. Determination of the transmittancy of an unknown solution enables one to read off concentration from the curve, as in the determination of manganese in steel (*3*). A variation of the method, eliminating the curve and employing the molecular extinction coefficient, has been used in the determination of copper in ores (*4*).

In order to test further the reliability of the latter type of method, particularly with samples containing higher percentages of the desired constituent, determinations of iron were made on a series of ores, as shown in Table I. The system measured consisted of the amethyst-colored complex formed by the addition of salicylic acid to a solution containing ferric ions in the presence of acetic acid. All transmittancy measurements were made with the photoelectric spectrophotometer built for Purdue University by the General Electric Co. The molecular extinction coefficients as determined for solutions of known iron content varied from 1144 at 460 mμ through 1622 at 520 mμ to 1528 at 550 mμ.

Procedure

A 0.2-gram ore sample was dissolved in concentrated hydrochloric acid and oxidized with concentrated nitric acid, and the solution was accurately diluted to 1000 ml. at 30°. The amethyst color was produced in 10 ml. of this solution according to the directions of Snell (*5*), and the volume was then accurately made up to 100 ml. at 30°. Particular care was taken to have the pH value of the final solution within rather close limits. Bech (*1*), in discussing the photoelectric determination of salicylic acid with ferric chloride, says that a decrease in pH value reduces the color intensity and that the pH value should not be below 2.2.

By means of the spectrophotometer the transmittancy of the amethyst solution in a 1-cm. cell was determined at intervals of 10 mμ from 460 to 550 mμ, inclusive. These wave lengths were chosen because they include the flat portion of the spectral transmission curve where readings are more nearly accurate. The photometer scale was frequently checked with Bureau of Standards glasses. Using the value of the extinction coefficient determined for the wave length in question, the percentage of iron was calculated (*4*) and the average of the ten figures was taken as the percentage of iron in the sample.

The results of the determination of iron in twelve ores are shown in Table I, which also includes for comparison the figures obtained by the dichromate method with diphenylamine as indicator (*2*).

Attention should be called to the possible effect of a small error in determining the transmittancy. The photometer scale of the instrument used can be read only to the nearest 0.1 per cent. For an ore containing about 50 per cent of iron, each 0.1 per cent on the scale corresponds to about 0.17 per cent of iron, or a percentage error of 0.34. It was therefore thought best to make the transmittancy measurements at as many as ten different wave lengths and then to take the average of the resulting percentages. This should

Table I. Results Obtained by the Spectrophotometric Method

Sample No.	Iron by dichromate method	Spectrophotometric Values: Average iron for 10 wave lengths	Deviation from mean: Average	Deviation from mean: Maximum	Difference between methods
	%	%	%	%	%
1	37.62	37.62	0.08	0.23	0.00
2	36.84	36.93	0.12	0.24	+0.09
3	36.12	36.07	0.12	0.26	−0.05
4	35.11	35.13	0.07	0.18	+0.02
5	34.45	34.53	0.09	0.16	+0.08
6	52.83	52.75	0.16	0.31	−0.08
7	49.59	49.34	0.25	0.39	−0.25
8	50.68	50.35	0.33	0.50	−0.33
9	52.20	52.09	0.13	0.27	−0.11
10	54.04	53.94	0.16	0.36	−0.10
11	56.00	55.97	0.17	0.25	−0.03
12	57.62	57.60	0.06	0.13	−0.02

give a more reliable figure than to take the average of ten readings at any one wave length.

The spectrophotometric method, provided a spectrophotometer possessing the precision of the Purdue instrument is used, is capable of giving results for iron in ores which will be within ±0.30 per cent of the values given by the dichromate titration method and many will be within ±0.10 per cent. Results may be duplicated on the same sample with a precision of about ±0.10 to ±0.20 per cent.

TABLE II. COMPARISON OF PERCENTAGE ERRORS IN IRON AND COPPER DETERMINATIONS

	Percentage Error		
	Maximum	Minimum	Average
Iron, 12 samples	0.65	0.00	0.20
Copper, 11 samples	1.98	0.00	0.69

In Table II is shown a comparison of the reliability of the results for iron, on a percentage basis, with those previously obtained by the writer (*4*) for copper ores, where the actual percentages were much lower. The figures indicate that the spectrophotometric method involving the use of the molecular extinction coefficient can be satisfactorily extended to the determination of iron where the percentage of the constituent determined is relatively high.

Summary

The spectrophotometric method employing the molecular extinction coefficient has been applied to the determination of iron in ores. Although the iron content is relatively high, the percentage error is smaller than when similar transmittancy measurements were made on the copper-ammonia system where the copper content was relatively very low.

The spectrophotometric method gives results for iron in ores which check well with those given by the dichromate method.

Acknowledgments

The writer wishes to express his sincere appreciation to M. G. Mellon, Department of Chemistry, Purdue University, in whose laboratory this investigation was conducted, and to thank him for his kind interest, helpful criticism, and profitable suggestions and for the use of the Purdue spectrophotometer. Thanks are also given to H. W. Swank, G. Dragt, and E. R. Wright of Purdue for their aid in adjusting the spectrophotometer.

Literature Cited

(1) Bech, P. F., *Dansk Tids. Farm.*, 9, 289 (1935).
(2) Mahin, E. G., "Quantitative Analysis," p. 242, New York, McGraw-Hill Book Co., 1932.
(3) Mehlig, J. P., IND. ENG. CHEM., Anal. Ed., 7, 27 (1935).
(4) *Ibid.*, 7, 387 (1935).
(5) Snell, F. D., and C. T., "Colorimetric Methods of Analysis," Vol. I, p. 301, New York, D. Van Nostrand Co., 1936.

RECEIVED September 1, 1936.

Determination of Acetylmethylcarbinol

Effect on Certain Analytical Procedures

A. F. LANGLYKKE AND W. H. PETERSON, University of Wisconsin, Madison, Wis.

SINCE acetylmethylcarbinol is found in varying quantities among the fermentation products of a large variety of bacterial cultures and enzymatic preparations (*3, 8, 11, 13, 14, 15*), a knowledge of its characteristics and its effect on various analytical procedures is particularly desirable. Because of the nature of the compound it reacts in many of the common analytical procedures, causing error in the final results. Thus, because of its reducing properties it interferes in the common methods for the determination of reducing sugars. Since it is volatile it appears in distillates and causes error in the analyses for volatile products. It reacts with alkaline iodine and therefore interferes with the ordinary method for the determination of acetone (*6*). It gives rise to acid products on oxidation and in this way interferes with methods for the determination of alcohol which depend on oxidation.

The acetylmethylcarbinol used for these experiments was obtained from the Lucidol Corporation, Buffalo, N. Y. The liquid material was crystallized by holding for one month at a temperature of approximately −10° C. The material so obtained was of a mushy consistency and showed a yellow coloration and pungent odor which were removed by washing several times with ether. The resulting white crystalline powder gave a melting point which varied from 84° to 125° C., depending on the rate at which the oil bath was heated. Statements in the literature indicate that the melting point of dimeric acetylmethylcarbinol is rather irregular and varies with the method of crystallization (*1, 2*).

Determination of the molecular weight of the crystalline material by elevation of the boiling point indicated an initial value of about 160 which dropped to 101 after boiling for 25 minutes because of conversion to the monomer. Other investigators (*1, 2*) have found molecular weights for acetylmethylcarbinol dimers which ranged from 170 to 195 as compared to the theoretical value of 176.

Reaction with Alkaline Iodine

Since acetylmethylcarbinol contains the acetyl group (CH_3CO—) directly linked to carbon, it will react with alkaline iodine to form iodoform (*5*). To verify the nature of the reaction between acetylmethylcarbinol and iodine, aliquots of standard aqueous solutions of the compound (containing 3 to 10 mg.) were made alkaline with 1 *N* sodium hydroxide and standard iodine solution was added. Iodoform was precipitated and, after standing for 10 to 15 minutes, the excess iodine was liberated by the addition of 1 *N* sulfuric acid and titrated. The averages of a large number of determinations are presented in Table I. The iodine used approaches six atoms per molecule of iodoform, which supports the following formulation for the reaction:

$$3I_2 + 6NaOH = 3NaOI + 3NaI + 3H_2O$$
$$CH_3CHOHCOCH_3 + 3NaOI = CHI_3 + CH_3CHOHCOONa + 2NaOH$$

The iodoform isolated from one reaction sublimed at 118° to 119° C. as compared to the reported value of 119° (*9*). Lactic acid was recovered from the products of the reaction by extraction of the acidified solution with ether. From the ether extract the zinc salt was prepared and analyzed. The water of crystallization was determined by drying to a constant weight at 110° C., the zinc content by ignition, and lactic

Table I. Reaction of Acetylmethylcarbinol with Alkaline Iodine

Sample	0.1 N I_2 per Mg. CH_3CHOH-$COCH_3$	Atoms I per Molecule CH_3CHOH-$COCH_3$	Per Cent of Theory
	Cc.		
Crystals washed with ether	0.671	5.91	98.5
Ether-washed product recrystallized from acetone	0.672	5.92	98.7
Theoretical for reaction	0.681	6.00	100.0

Table II. Volatility of Acetylmethylcarbinol in Aqueous Solution

Fractions, Percentage of Total Distilled	Acetylmethylcarbinol in Distillate — Concentration of Solution: 0.005%	0.02%	0.072%	0.10%	Av.
	%	%	%	%	%
25	31.8	32.1	31.5	..	31.8
50	59.7	60.3	59.6	59.2	59.7
75	83.7	83.9	83.1	..	83.6

acid by the method of Friedemann and Graeser (*4*) with the following results:

Calcd. for $Zn(C_3H_5O_3)\cdot 3H_2O:H_2O$ 18.2. Found: 18.0
Calcd. for $Zn(C_3H_5O_3)$:Zn 26.9, $CH_3CHOHCOOH$ 74.0. Found: Zn 29.0, $CH_3CHOHCOOH$ 73.9.

The data show that the product isolated was nearly pure inactive zinc lactate containing three molecules of water of crystallization. The high zinc content is probably due to the presence of small amounts of excess zinc—e. g., zinc hydroxide—which raise the zinc value but have no appreciable effect on the other analyses.

Volatility

The rate of distillation of acetylmethylcarbinol from aqueous solution was determined by a modification of the method of Virtanen and Pulkki (*18*). In order to prevent condensation and reflux, an insulating hood made from a large metal can was used to cover the distillation flask and in order to ensure uniform heating, a metal shield was used to protect the Bunsen burner. In the experiments 200 cc. of solution were distilled and three 50-cc. fractions were collected. These fractions as well as the residue were analyzed by application of the iodoform reaction. The percentage of acetylmethylcarbinol in the distillates was found to be independent of the rate of distillation when the precautions to prevent reflux were observed. The data for the distillation of solutions varying in concentration from 0.005 to 0.1 per cent are presented in Table II.

As shown by the data, the distribution of acetylmethylcarbinol during distillation is constant and independent of the concentration of the solution. A quantitative expression for the volatility may be calculated by application of the formula used by Virtanen and Pulkki (*18*):

$$k = \frac{\log y_1 - \log y_2}{\log x_1 - \log x_2}$$

In this equation y_1 represents the amount of volatile compound in the solution at the beginning of distillation and y_2 the amount at the end, while x_1 represents the amount of water at the beginning and x_2 the amount at the end. The values for the distillation constant, k, as calculated from the average figures for the first, second, and third fractions (Table II) were 1.330, 1.297, and 1.298. On comparison with the figures of Virtanen and Pulkki (*18*) it is seen that acetylmethylcarbinol is a little more volatile than propionic acid (k = 1.239 to 1.245) and less volatile than butyric acid (k = 1.940 to 2.035).

In the determination of acetone in a fermented medium containing acetylmethylcarbinol, a correction must be made which depends on the concentration of acetylmethylcarbinol and the volume of distillate collected. If 25 per cent of the liquid is distilled off, approximately 32 per cent of the acetylmethylcarbinol will be contained in the distillate. For other volumes distilled, the correction may be applied most conveniently by plotting a curve using the values of Table II, or the correction may be made by calculation using the equation

$$\log \frac{y_1}{y_2} = k \log \frac{x_1}{x_2}$$

When 35 per cent of the liquid is distilled, $\frac{x_1}{x_2} = \frac{100}{65}$, and setting k equal to 1.31 the value for y_2, the amount of acetylmethylcarbinol remaining undistilled, is found to be 56.8 per cent. Therefore, 43.2 per cent of the acetylmethylcarbinol will be found in the distillate.

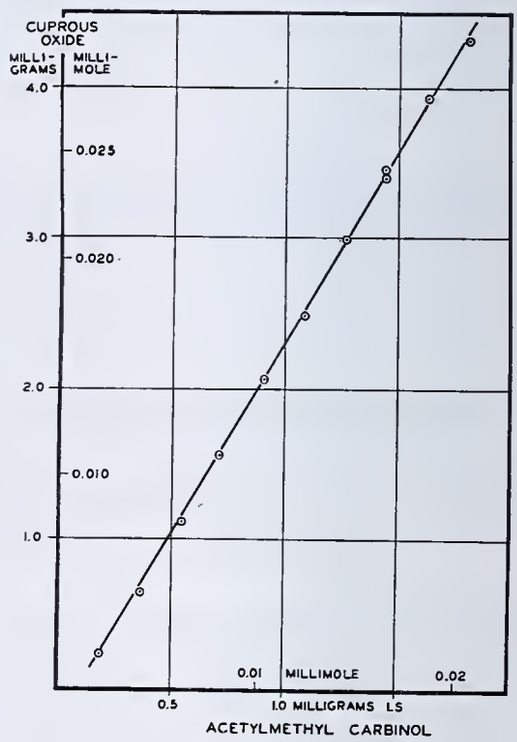

Figure 1. Cuprous Oxide Produced in Reduction of Shaffer-Hartmann Sugar Reagent by Acetylmethylcarbinol

Reaction with Oxidizing Reagents

In order to determine the corrections to be applied in the analyses for reducing sugar, two methods for the determination of glucose were investigated. These were the Shaffer-Hartmann method as modified by Stiles, Peterson, and Fred (*17*), which depends on the reduction of copper and iodometric determination of the cuprous oxide produced, and the Hagedorn-Jensen method (*7*), which depends on the reduction of potassium ferricyanide to ferrocyanide and titration of the excess ferricyanide with dilute standard thiosulfate solution. In each case varying amounts of an aqueous solution of acetylmethylcarbinol were submitted to the procedure used in the determination of the reducing sugars and the extent of reduction of the reagent was determined. The results are shown graphically in Figures 1 and 2.

Reduction of Cupric Sulfate. According to Kling (*12*), acetylmethylcarbinol is oxidized by alkaline cupric oxide

to acetic acid, but such a result was not obtained in these experiments. Stahly and Werkman (*16*) report that 3.01 grams of cuprous oxide are produced from each gram of acetylmethylcarbinol under the conditions of the Munson-Walker method. In the copper-reduction method used, the tubes are only loosely stoppered to prevent oxidation by the air and loss of volatile products is not prevented. It is also possible that the 15-minute reaction period is not long enough for complete reaction. For these reasons the amount of copper reduced does not bear a stoichiometric relation to the amount of acetylmethylcarbinol in the sample, although there is a regular relation between these two variables.

If acetylmethylcarbinol is oxidized to diacetyl, two hydrogen equivalents per mole are required, while for the oxidation to acetic acid four hydrogen equivalents are necessary. As calculated from the graph of Figure 1, 2.95 hydrogen equivalents are actually used in the oxidation, which shows that only about one-half of the diacetyl formed is further oxidized to acetic acid. The points described a straight line, which does not, however, pass through the origin. This apparent anomaly can be explained only on the assumption that a constant small amount of acetylmethylcarbinol escapes oxidation, or that a constant small amount of diacetyl is lost through evaporation.

Reduction of Ferricyanide. As in the reduction of copper, the reduction of ferricyanide proceeds without complete conversion of the acetylmethylcarbinol to acetic acid. In this case 2.67 hydrogen equivalents are required, although more variation was observed in this reaction. This is shown by the fact that the individual points on the graph of Figure 2 do not correspond so well to a straight line as in the case of the reduction of copper.

Oxidation with Acid Potassium Dichromate

In the determination of butyl and ethyl alcohols by the method of Johnson (*10*), a distillate containing the neutral volatile products from a bacterial fermentation is oxidized by means of acid potassium dichromate solution and the acid resulting from the oxidation is removed by distillation. Two fractions are collected and the content of butyl and ethyl alcohols in the original sample is calculated from the titrations of these fractions. Since acetylmethylcarbinol yields acid products on oxidation, it is of interest to know what effect this compound will exert in the alcohol method.

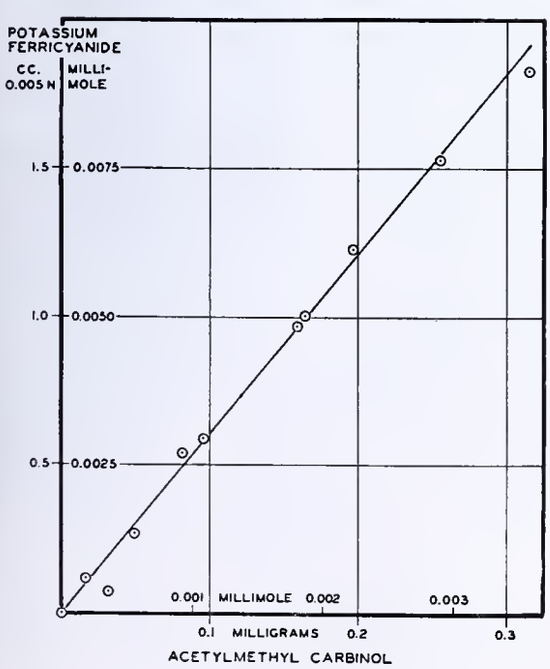

Figure 2. Reduction of Potassium Ferricyanide (Hagedorn-Jensen Reagent) by Acetylmethylcarbinol

Table III. Effect on Johnson Method for Butyl and Ethyl Alcohols

Acetylmethylcarbinol Sample	Alcohol Indicated: Actual, Butyl alcohol	Actual, Ethyl alcohol	Theoretical[a], Butyl alcohol	Theoretical[a], Ethyl alcohol
Mg.	*Mg.*	*Mg.*	*Mg.*	*Mg.*
5	−0.01	5.26	0	5.23
10	0.14	10.48	0	10.46
15	0.14	15.87	0	15.69
Av. (per mg. acetoin)	0.007	1.053	0	1.046

[a] Based on assumption that one mole of acetylmethylcarbinol is equivalent to two moles of ethyl alcohol.

Samples of 5, 10, and 15 mg. of acetylmethylcarbinol in aqueous solution were analyzed according to the procedure for the determination of alcohols by the Johnson method (*10*). In Table III the results obtained are expressed as milligrams of butyl and ethyl alcohols. The oxidation of acetylmethylcarbinol by the acid dichromate yields acetic acid, and therefore for purposes of correcting any alcohol determinations one mole of acetylmethylcarbinol corresponds to two moles of ethyl alcohol.

Determination of Acetylmethylcarbinol

Since acetylmethylcarbinol reacts quantitatively with alkaline iodine reagent and since the carbinol is distilled from aqueous solution at a definite rate which is independent of the concentration, it was possible to develop a method for its determination in which these properties were applied. Attempts to separate the carbinol from the fermented medium were unsuccessful, as neither ether extraction nor constant volume distillation gave a quantitative recovery of the compound.

In order to apply the iodoform reaction directly to the determination of acetylmethylcarbinol it is necessary to eliminate from the sample any other compounds which will react with the iodine reagent. Acetone is commonly present in large excess over the acetylmethylcarbinol content in some fermentations, but this compound is practically completely eliminated by distillation of half the volume of an aqueous solution. Ethyl alcohol in appreciable concentration will also react with alkaline iodine, although this reaction is very incomplete at room temperature and in the short reaction time used. However, it is also completely eliminated by half distillation. Butylene glycol is also likely to occur in association with acetylmethylcarbinol in fermentations and will react with alkaline iodine in 15 minutes at room temperature to produce an apparent acetylmethylcarbinol content equivalent to 10 per cent of its own weight. However, because of the nonvolatility of this compound, the error resulting by analysis of the third quarter of distillate is negligible.

By far the most convenient method for the determination of acetylmethylcarbinol involves direct distillation from the fermentation mixture, and by this method quantitative results could be obtained. The disadvantage of direct distillation from the culture medium lies in the fact that many of the media are prone to foam badly during distillation. However, many ordinary media may be directly distilled in the fractional distillation procedure and certain procedures may be applied to minimize foaming when this characteristic is displayed.

It was found that a mineral salts–peptone-glucose medium which had been fermented by *A. aerogenes* in the presence of an excess of calcium carbonate could not be distilled, because of excessive foaming. To correct this condition the culture was acidified with sulfuric acid, heated just to boiling and, after cooling, filtered by suction through an asbestos mat.

Table IV. Direct Determination of Acetylmethylcarbinol by Fractional Distillation of Culture

Sample	Acetylmethylcarbinol Found	Added	Found (after addition)	Recovery of Added Acetylmethylcarbinol	
	Mg./100 cc.	*Mg./100 cc.*	*Mg./100 cc.*	*Mg./100 cc.*	%
Sterile salts–peptone medium	..	49.2	50.3	50.3	102.1
	..	21.0	21.4	21.4	101.9
Cl. polymyxa in 6% corn mash	40.3	49.6	89.5	49.2	99.2
A. aerogenes in salts-peptone medium	29.1	37.8	67.9	38.8	102.7
A. aerogenes in salts-peptone medium (excess $CaCO_3$)	39.4	44.0	85.1	45.7	103.9
A. aerogenes in salts-peptone medium	18.2	10.0	28.1	9.9	99.0
Cl. acetobutylicum in 6% corn mash	37.4	49.8	87.1	49.7	99.8

The resulting product showed considerable less tendency to foam, but as an added precaution the sample was diluted to four times the volume before applying the distillation procedure. By this procedure quantitative results could be obtained.

For the results reported in Table IV the following general procedure was used:

Enough of the culture to give 100 cc. of clear filtrate is filtered through a fluted filter and 100 cc. of the clear filtrate are then pipetted into the 300-cc. distillation flask which contains 6 or 8 glass beads to prevent bumping. The flask is directly connected to a short condenser by means of a ground-glass joint and is supported by a ring bearing a wire gauze with an asbestos mat center. The insulating hood is placed over the flask, and heating is started with a burner which is protected by a shield so as to guarantee uniform heating. The rate of heating is so adjusted that the distillate which collects is cold and the medium under distillation boils evenly. A fraction of exactly 50 cc. is collected in a volumetric flask and may either be discarded or used in the determination of the more volatile products of the fermentation. A second fraction of exactly 25 cc. is then collected and analyzed by the iodoform reaction.

The contents of the 25-cc. volumetric flask are added to 15 cc. of 1 *N* sodium hydroxide in a 150-cc. Erlenmeyer flask. The volumetric flask is rinsed with 3 portions of a few cubic centimeters of water and the rinsings are added to the sample in the Erlenmeyer. Then while the flask is constantly shaken in one hand, exactly 5 cc. of 0.2 *N* iodine are added by rapid dropping from a pipet held in the other. The precipitation of iodoform begins almost immediately and after 10 minutes the reaction is complete. After standing for 10 to 15 minutes out of direct sunlight, 20 cc. of 1 *N* sulfuric acid are run into the flask and the liberated iodine is titrated immediately to the starch end point with standard 0.1 *N* sodium thiosulfate solution. A semimicroburet which may be read accurately to 0.01 cc. is used. A blank for the purpose of standardizing the iodine solution is run on 5 cc. of the iodine solution, with distilled water replacing the sample in the ordinary procedure.

Since one mole of acetylmethylcarbinol is equivalent to 6 atoms of iodine, one millimole (or 88 mg.) is equivalent to 60 cc. of 0.1 *N* iodine. Then, for each cc. of 0.1 *N* iodine used in the iodoform reaction there are 1.467 mg. of acetylmethylcarbinol in the sample. According to Table II, 23.9 per cent of the acetylmethylcarbinol in the sample appears in the third quarter of distillate. Therefore, to obtain the total acetylmethylcarbinol content of the 100-cc. sample distilled, the content of the third quarter of distillate is divided by the factor 0.239.

The results reported in Table IV were obtained on a variety of cultures as shown. The salts-peptone medium used consisted of 0.07 per cent dibasic ammonium phosphate, 0.5 per cent peptone, 0.1 per cent asparagine, and tap water. In the case of the fermentations 3 per cent of glucose was added. The corn mash was made up with 6 per cent of corn meal in tap water. In the second column of Table IV are given the concentrations of acetylmethylcarbinol as determined directly on the culture by the procedure outlined. Acetylmethylcarbinol was then added in the amounts given in the third column and the content of the samples so prepared was again determined with the results expressed in the fourth column. In the fifth and sixth columns are entered the recoveries of the added acetylmethylcarbinol as obtained from the difference between the determinations before and after the addition of a known quantity of acetylmethylcarbinol. The data reported are the averages of triplicate analyses. The deviation of individual results from the average ranged from 0 to 4.1 per cent and averaged 1.13 per cent. The average error in the recovery of added acetylmethylcarbinol was 2.2 per cent.

The recoveries are in general a little high, and the average recovery is about 101.2 per cent. Therefore, a somewhat higher degree of accuracy may be obtained if the recovery is determined separately for each different medium used, as this value will vary somewhat with the nature of the solution under analysis. Thus, if instead of using the value of 23.9 per cent recovery as determined for aqueous solutions a corrected value of 23.6 per cent is used, the errors in the determinations reported would vary from −2.2 to +2.7 per cent.

Summary

Because of the unique nature of the compound, acetylmethylcarbinol affects a variety of common analytical procedures. Methods for the correction of acetone, alcohol, and reducing sugar determinations in the presence of acetylmethylcarbinol are described. Based on its volatility and iodoform reaction, a method for its quantitative determination has been developed.

Literature Cited

(1) Diels, O., and Stephan, E., *Ber.*, **40**, 4336 (1907).
(2) Dirscherl, W., and Braun, E., *Ibid.*, **63B**, 416 (1930).
(3) Elion, L., *Biochem. Z.*, **171**, 40 (1926).
(4) Friedemann, T. E., and Graeser, J. B., *J. Biol. Chem.*, **100**, 291 (1933).
(5) Fuson, R. C., and Bull, B. A., *Chem. Rev.*, **15**, 275 (1934).
(6) Goodwin, L. F., *J. Am. Chem. Soc.*, **42**, 39 (1920).
(7) Hagedorn, H. C., and Jensen, B. N., *Biochem. Z.*, **135**, 46 (1923).
(8) Horovitz-Vlassova, L. M., and Rodionova, E. A., *Zentr. Bakt. Parasitenk.*, II Abt., **87**, 333 (1933).
(9) Intern. Crit. Tables, Vol. I, p. 176, New York, McGraw-Hill Book Co., 1926.
(10) Johnson, M. J., Ind. Eng. Chem., Anal. Ed., **4**, 20 (1932).
(11) Kay, H. D., *Biochem. J.*, **20**, 321 (1926).
(12) Kling, A., *Bull. soc. chim.*, (3) **35**, 209 (1909).
(13) Mayé, P., *Compt. rend. soc. biol.*, **81**, 635–7 (1918).
(14) Neuberg, C., and Reinfurth, E., *Biochem. Z.*, **143**, 553 (1923).
(15) Pederson, C. S., and Breed, R. S., *J. Bact.*, **16**, 163 (1928).
(16) Stahly, G. L., and Werkman, C. H., *Iowa State Coll. J. Sci.*, **10**, 205 (1936).
(17) Stiles, H. R., Peterson, W. H., and Fred, E. B., *J. Bact.*, **12**, 427 (1926).
(18) Virtanen, A. I., and Pulkki, L., *J. Am. Chem. Soc.*, **50**, 3138 (1928).

Received October 26, 1936. Supported in part by a grant from the Special Research Fund of the Graduate School, University of Wisconsin.

Estimation of Acetone

C. O. HAUGHTON, Courtaulds Ltd., Coventry, England

AMONG the best-known methods for the quantitative estimation of acetone are the iodoform and oxime nethods. In estimating samples of pure acetone by these nethods, however, the author was surprised to find that esults of over 102 per cent were obtained. The details of rocedure in the estimations are set out below.

Iodoform Method

About 2 cc. of the acetone were pipetted into a weighed 250-cc. tandard flask containing about 50 cc. of water, making sure hat the sample fell into the water without touching the glass. The flask was shaken gently to mix and weighed again, and water vas then added to the 250-cc. mark. Now 20 cc. of N sodium ydroxide were run into a glass-stoppered bottle of 150-cc. apacity, and after thoroughly mixing, 5 cc. of the dilute acetone olution were added to the bottle and mixed. Fifty cubic centineters of 0.1 N iodine solution were then added drop by drop from pipet, swirling the contents of the bottle during the addition vhich took about 3 minutes. Originally the 50 cc. were run rom the pipet at full rate, the addition taking about 30 seconds, ill it was found that low results were liable to be obtained, as bserved by Goodwin (*4*) and others (*1*). After adding the odine, the stopper was inserted and the bottle left 10 minutes. Then 21 cc. of N sulfuric acid were added, mixed, and the liberted iodine was estimated by titration with 0.1 N sodium thiolfate, using starch as indicator. A blank determination was lso carried through, the difference between the two titrations iving the cubic centimeters of thiosulfate equivalent to the odine absorbed.

The results are given in Table I. In experiments 1 to 3 ommercially pure acetone was used, containing less than .2 per cent of water as estimated by the gasoline method.[1] In xperiments 4 to 17 the acetone was dried by standing over arium oxide several days and then redistilled. The acetone sed in experiment 18 was obtained by fractionation, taking he portion boiling at 55.7° C. at 760 mm. pressure; the pecific gravity at 20° C. was 0.792.

ABLE I. RESULTS FOR PURE ACETONE BY IODOFORM METHOD

Expt.	Sample Titrated	Thiosulfate	Factor	Acetone
	Gram	*Cc.*		%
1	0.01265	13.30	0.0996	101.3
2	0.03163	33.30	0.0996	101.5
3	0.03169	33.45	0.0996	101.7
4	0.03129	33.08	0.0998	102.0
5	0.03152	33.10	0.0999	101.5
6	0.03152	33.10	0.0999	101.5
7	0.03152	33.40	0.0999	102.4
8	0.03152	33.40	0.0999	102.4
14	0.03149	66.8	0.0500	102.5
15	0.03159	33.60	0.0999	102.8
16	0.03128	33.36	0.0993	102.4
17	0.02573	25.86	0.1054	102.5
18	0.03139	33.35	0.0999	102.8

In experiments 1 to 6 the iodine was added rapidly, but in ne other experiments it was added slowly, as already menoned. In the latter the results are more consistent though igher. The mean percentage of acetone in experiments 7 to 3 is 102.5 per cent. The thiosulfate used was standardized very few days against potassium dichromate and once against odine, both analytically pure reagents.

Oxime Method

The procedure followed was that described by Marasco 3), except that the indicator used was the modified methyl range recommended by Hickman and Linstead (*5*). This was found to give the same end point in the titration, but it was much more sharply defined (*7*).

The acetone solutions were made up as described under the iodoform method. Two beakers, each containing 400 cc. of the hydroxylamine hydrochloride solution (0.2 per cent) neutralized to a steel-gray color with the modified indicator, were placed on a sheet of white paper, 25 cc. of the acetone solution were added to one of the beakers, and the acid liberated was titrated with 0.1 N sodium hydroxide till the colors in the two beakers matched again. The end point can be determined to one drop of 0.1 N sodium hydroxide and is permanent for 5 minutes.

Taking Marasco's factor as correct—i. e., 1 cc. of 0.1 N sodium hydroxide is equivalent to 0.00614 gram of acetone—the results shown in Table II were obtained.

TABLE II. RESULTS FOR PURE ACETONE BY OXIME METHOD

Expt.	Sample Titrated	Sodium Hydroxide	Sodium Hydroxide Factor	Acetone
	Gram	*Cc.*		%
10	0.1574	26.30	0.1000	102.6
11	0.1579	26.50	0.1000	103.0
12	0.1579	26.40	0.1000	102.6
13	0.1579	26.45	0.1000	102.8
19	0.1578	26.40	0.1000	102.7
20	0.1571	26.05	0.1011	102.9
21	0.1588	26.30	0.1011	102.8
22	0.1586	26.20	0.1011	102.5

The mean percentage of acetone given by this method is 102.7 per cent, which agrees closely with the value obtained by the iodoform method. This is to be expected, since Marasco's factor 0.00614 was obtained by checking the strength of his acetone solution by means of Messinger's iodoform method, assuming Messinger's method to be correct. Marasco's factor should therefore be changed to 0.00598—i. e., 1 cc. of 0.1 N sodium hydroxide is equivalent to 0.00598 gram of acetone. In other words, the oxime reaction

$$CH_3COCH_3 + NH_2OH{\cdot}HCl = (CH_3)_2C{:}NOH + HCl + H_2O$$

when carried out as described by Marasco, goes to 97.1 per cent of completion and not 94.4 per cent as he states.

Test for Formate in Iodoform Reaction Products

From the above experiments it appears that acetone, when estimated by Messinger's method (following the precautions advised by Goodwin, *4*) reacts with about 2.5 per cent more iodine than is required by the equation

$$CH_3COCH_3 + 4NaOH + 6I = CHI_3 + CH_3COONa + 3NaI + 3H_2O \quad (1)$$

It is possible that a small portion of the acetone reacts with iodine according to the equation

$$CH_3COCH_3 + 5NaOH + 10I = 2CHI_3 + HCOONa + 4NaI + 4H_2O \quad (2)$$

By this reaction 10 atoms of iodine instead of 6 are used.

To test if any formate is present in the reaction products the following procedure was adopted:

About 1 gram of acetone was added to 600 cc. of N sodium hydroxide in a 2-liter flask, and 1.17 liters of 0.1 N iodine were run in very slowly from a tap funnel, shaking continuously. When all the iodine had been added (45 minutes) the flask was left standing for 15 minutes and then the iodoform was filtered off. After acidifying the filtrate with 20 cc. of pure sulfuric acid diluted to 60 cc., about 5 cc. of mercury were added and the flask was shaken for an hour to remove the excess iodine. (Sodium thiosulfate was first used for neutralizing the iodine, but

[1] This method consists in adding gasoline to a sample of the acetone till cloud is formed at 20° C., the gasoline being checked against acetone of nown water content.

it was found to decompose into sulfur dioxide and sulfur in the subsequent steam-distillation. Then iron filings were tried, but the ferrous iodide formed also appeared to decompose in the steam distillation, giving free iodine. Hence, mercury was used instead.)

The solution, having been completely decolorized by the mercury, was filtered and the filtrate was steam-distilled after the addition of 2 cc. of sulfuric acid. When all the volatile acid had distilled over, about 5 liters of distillate having been collected, the distillate was neutralized with N sodium hydroxide, using phenolphthalein as indicator. Then 3 cc. of N sodium hydroxide were added in excess and the solution was evaporated down to 200 cc. Now 50 cc. of 5 per cent mercuric chloride solution were added to the clear solution (filtered, if necessary) and boiled for an hour under a reflux condenser (*2*). The white precipitate was filtered through a Gooch filter, washed with cold water, dried, and weighed.

A blank experiment was made taking 1 gram of glacial acetic acid in 600 cc. of N sodium hydroxide and adding 225 cc. of 0.1 N iodine, 27 grams of potassium iodide, 1 liter of water, then 20 cc. of concentrated sulfuric acid diluted to 60 cc. The iodine was decolorized by adding mercury and the rest of the experiment carried out exactly as before.

Finally a check experiment was made like the blank, except that the acetic acid contained a known weight of formic acid. The results are given in Table III.

Table III. Formic Acid Found in Iodoform Reaction Products

Expt.	Sample Taken		Mercuric Chloride Ppt.	Formic Acid Found
	Gram		*Gram*	*Gram*
1	0.96	Me_2CO	0.045	0.0044
2	1.0	AcOH (blank)	None	None
3	1.0	AcOH containing 0.04 gram HCOOH (check)	0.331	0.0323
4	0.96	Me_2CO	0.0664	0.0064
5	1.0	AcOH (blank)	0.0004	Negligible

The blank experiments, 2 and 5, show a negligible weight of formic acid. Experiment 3 shows that the method is satisfactory for estimating small amounts of formic in acetic acid. Experiments 1 and 4, though apparently carried out under the same conditions, do not agree very well in the weight of formic acid found, which is low in both cases. In experiment 4, 0.96 gram of acetone gave 0.0064 gram of formic acid. This would account for an apparent value of 100.6 per cent in the iodoform method for estimating acetone, which is considerably lower than the figure 102.5 actually found. However, the acetic acid found in the steam-distillation was only 80 per cent of the theoretical amount; it may be that both formate and acetate were occluded in the iodoform. The experiments, therefore, support the view that Reaction 2 takes place to some extent.

In applying Messinger's method to the estimation of methylethyl ketone, Cassar (*3*) found that constant results of 110.5 per cent were obtained for the ketone under specified conditions. He accounted for this by assuming that two simultaneous reactions occur.

$$CH_3CH_2COCH_3 + 6I + 4NaOH = CHI_3 + CH_3CH_2COONa + 3NaI + 3H_2O$$

$$CH_3CH_2COCH_3 + 10I + 5NaOH = 2CHI_3 + CH_3COONa + 4NaI + 4H_2O$$

The first reaction is the normal one, but the second one also occurs in which more iodine is taken up, thus giving results 10.5 per cent too high; this explanation is analogous to the one given in this paper to account for the high result of 102.5 per cent obtained in the estimation of pure acetone.

Summary

Messinger's method (*4*) was found to give results of 102.5 per cent acetone in the estimation of pure samples.

Marasco's oxime method (*6*) gives results in good agreement with Messinger's method, but as his factor is obtained from Messinger's method of analysis it is incorrect. The value 0.00614 should be changed to 0.00598 for the weight of acetone equivalent to 1 cc. of 0.1 N sodium hydroxide.

The indicator methyl orange–xylene cyanol (*5*) was found to give a very sharp end point in the oxime titration.

A small amount of formic acid was detected among the products of Messinger's iodoform reaction, showing that some of the acetone probably reacts according to the equation

$$CH_3COCH_3 + 5NaOH + 10I = 2CHI_3 + HCOONa + 4NaI + 4H_2O$$

Literature Cited

(1) Ardagh et al., Ind. Eng. Chem., **16**, 1134 (1924).
(2) Brit. Standard Specification No. 576, p. 10, 1934.
(3) Cassar, H. A., Ind. Eng. Chem., **19**, 1061 (1927).
(4) Goodwin, L. F., *J. Am. Chem. Soc.*, **42**, 39–41 (1920).
(5) Hickman and Linstead, *J. Chem. Soc.*, **121**, 2502 (1922).
(6) Marasco, M., Ind. Eng. Chem., **18**, 701 (1926).
(7) Pemberton, Card, and Craven, *J. Soc. Chem. Ind.*, **54**, 163T (1935).

Received November 16, 1936.

A Modified Mercury Seal for Stirrers

LINDSAY H. BRIGGS, Auckland University College, University of New Zealand, Auckland, New Zealand

THE mercury seal for stirrers here described has been found useful in catalytic hydrogenations and oxidations where absorption of gas is measured at atmospheric pressure. Usually in such reactions stirring must be done with a gas-tight stirrer or else some system of shaking employed, both of which methods are simplified by use of the present seal for stirrers.

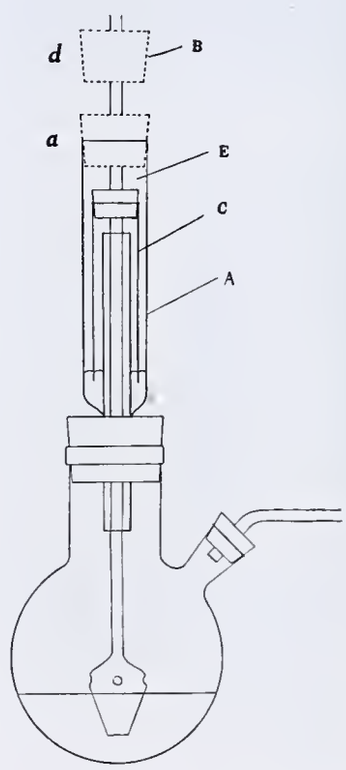

In the accompanying figure a cross section of the seal and stirrer is shown. The outer tube, A, is elongated thus enabling a stopper, B, to be slid down the stirrer rod, closing the top of the seal. In order to fill the reaction vessel with the desired gas, mercury is first added in just sufficient quantity to cover the lower end of the tube, C, as shown, and stopper B is slid down to position a. The flask is then evacuated, the air in E bubbling past the mercury without forcing any over. The required gas is then admitted up to atmospheric pressure, which automatically again closes the ends of C, and the stopper is slid up the stirrer rod to position d. More mercury can then be added to the seal to increase the safety margin and the stirrer set in motion.

Care must be taken to ensure that mercury is not forced into the reaction flask by a fall in pressure which must be kept approximately at atmospheric pressure.

Received December 10, 1936.

Determination of Zirconium in Steels with *n*-Propylarsonic Acid

H. H. GEIST AND G. C. CHANDLEE, The Pennsylvania State College, State College, Pa.

THE usefulness of *n*-propylarsonic acid as a reagent for the determination of zirconium in the presence of other metallic ions has been shown (*1*, *3*). However, the determination of a constituent in an alloy steel presents a special case because of the large amount of iron present and varying amounts of other elements that may be present. Benzenearsonic acid has been investigated for this determination (*4*).

Materials

With the exception of the determinations in the presence of large amounts of tungsten, 3-gram samples of Bureau of Standards steel No. 55 were used. For high-tungsten steels a reference sample containing 18.17 per cent of tungsten, 3.85 per cent of chromium, and 0.95 per cent of vanadium was used. To the solutions of these steels were added measured amounts of zirconium in the form of zirconyl chloride and measured quantities of other salts as desired.

A saturated water solution (approximately 5 per cent) of Eastman's *n*-propylarsonic acid was used as the reagent. Further purification of the reagent was found unnecessary.

Other Constituents

IRON. The presence of the constituents commonly found in alloy steels causes little difficulty in this determination. The precipitation of zirconium is complete in the presence of these large amounts of iron. A small quantity of iron is adsorbed in the zirconium precipitate, but a complete separation is obtained by reprecipitation.

TITANIUM, ALUMINUM, CHROMIUM, COBALT, NICKEL, COPPER, URANIUM, VANADIUM, THORIUM, AND MOLYBDENUM. The separation from these elements is complete in one precipitation. It is not necessary to precipitate from a solution containing hydrogen peroxide to avoid interference of titanium. In this respect *n*-propylarsonic acid differs from the other acids of this group so far investigated.

CARBON, SILICON, AND TUNGSTEN. These constituents are removed by filtration, following the usual procedure of evaporation of the solution and dehydration of the residue. The small amount of tungsten that possibly escapes removal by this procedure does not interfere in the subsequent determination.

PHOSPHORUS. As suggested by Simpson and Schumb (*5*), any zirconium remaining in the silica residue as phosphate can be recovered by a sodium carbonate fusion.

TIN. At the acidity used tin is partially precipitated by *n*-propylarsonic acid and the ignited zirconium dioxide contains some tin oxide. The method suggested by Caley and Burford (*2*) for the removal of tin oxide—treatment with ammonium iodide and ignition—was found to be very satisfactory and residues containing only zirconium dioxide were obtained.

Procedure

Dissolve 3 grams of steel in 40 cc. of concentrated hydrochloric acid and add sufficient concentrated nitric acid to oxidize the iron. Evaporate to dryness, moisten the residue with concentrated hydrochloric acid, evaporate again to dryness, and bake for about 30 minutes at 105° to 110° C. Take up the residue with 10 cc. of concentrated hydrochloric acid and warm gently until solution is complete. Dilute the solution to 100 cc., filter while hot, and wash the residue well with hot water. Reserve the filtrate and treat the residue as follows:

Ignite the residue in a platinum crucible and volatilize the silica by treatment with hydrofluoric and sulfuric acids in the usual manner. Fuse the residue with sodium carbonate. Extract with hot water, filter, and wash well with hot water. Discard the filtrate. Ignite the residue in platinum and fuse with potassium pyrosulfate, avoiding a large excess. Extract with water and a few drops of sulfuric acid, filter, and wash with hot water; add the filtrate to the main filtrate.

Dilute the combined filtrates to a volume of 300 cc. Heat to boiling and precipitate the zirconium with 40 to 50 cc. of a 5 per cent water solution of *n*-propylarsonic acid. Digest for 30 to 60 minutes, filter while hot, and wash with hot water. (Suction may be employed if desired, the filter paper being fortified with a platinum or a paper cone.)

Return the filter paper containing the precipitate to the original beaker and disintegrate by warming gently with 10 cc. of concentrated hydrochloric acid. Add 100 cc. of water and reprecipitate the zirconium by adding 10 cc. of the *n*-propylarsonic acid solution. Digest for 30 minutes, filter, and wash well with hot water as previously described. Ignite in porcelain over a Meker burner. If tin is absent, no further treatment is necessary. If tin is present, add ammonium iodide and ignite. Repeat the treatment with ammonium iodide until constant weight is obtained. Weigh as zirconium dioxide.

Experimental Data

In the analyses made by the procedure described above, steels of varying composition were made by dissolving 3-gram samples of Bureau of Standards steel No. 55 and adding to the solution measured quantities of zirconyl chloride and solutions of salts of other metals desired. For the determination of zirconium in a high-tungsten steel 3-gram samples of a reference steel containing 18.17 per cent of tungsten were used. The results are given in Tables I and II.

TABLE I. DETERMINATION OF ZIRCONIUM IN STEELS

(3-gram sample of Bureau of Standards steel No. 55)

Constituents Added[a]	Zirconium Found					
	Gram[b]	%[b]	*Gram*[c]	%[c]	*Gram*[d]	%[d]
Ti^{++++}, Al^{+++}, Cr^{+++},	....	..	0.0101	0.34	0.0489	1.60
Co^{++}, Ni^{++}, Cu^{++},	....	..	0.0091	0.30	0.0495	1.62
UO_2^{++}, VO_3^{-}, MoO_4^{--}	....	..	0.0094	0.31	0.0489	1.60
	....	..	....	..	0.0494	1.62
	....	..	....	..	0.0504	1.66
	....	..	....	..	0.0502	1.65
Above elements and Sn^{++++}	0.0034	0.11	....	..	0.0500	1.64
	0.0032	0.11	....	..	0.0508	1.67
	0.0031	0.10	....	..	0.0508	1.67
	0.0028	0.09	....	..	0.0500	1.64
	0.0030	0.10				
Ti^{++++}, Al^{+++}, UO_2^{++},	....	..	....	..	0.0495	1.62
MoO_4^{--}, VO_3^{-}, WO_4^{--}	....	..	....	..	0.0488	1.60
	....	..	....	..	0.0491	1.61
	....	..	....	..	0.0492	1.61
Th^{++++}, Ni^{++}, Cu^{++}	....	..	....	..	0.0491	1.61
	....	..	....	..	0.0488	1.60
	....	..	....	..	0.0491	1.61

[a] 0.02 gram of each metal.
[b] 0.0035 gram = 0.11%.
[c] 0.0098 gram = 0.33%.
[d] 0.0490 gram = 1.61%

TABLE II. DETERMINATION OF ZIRCONIUM IN A HIGH-TUNGSTEN STEEL

(3-gram sample of alloy steel, 18.17 per cent tungsten)

Constituents Present				Zirconium Found[a]	
	Gram		*Gram*	*Gram*	%
W	0.5451	P	0.0007	0.0498	1.63
Cr	0.1155	Si	0.0054	0.0496	1.62
V	0.0285	C	0.0225	0.0492	1.61
Mn	0.0105				

[a] Zr present, 0.0487 gram = 1.60%.

Summary

Zirconium can be determined in steels with *n*-propylarsonic when present in amounts as low as 0.1 per cent and in the presence of titanium, aluminum, chromium, cobalt, nickel, copper, uranium, vanadium, thorium, molybdenum, and tungsten.

Tin is partially precipitated by this reagent, but the zirconium dioxide residues obtained upon ignition may be freed from tin oxide by adding powdered ammonium iodide and igniting.

Literature Cited

(1) Arnold, F. W., and Chandlee, G. C,. *J. Am. Chem. Soc.*, 57, 8 (1935).
(2) Caley, E. R., and Burford, M. G., Ind. Eng. Chem., Anal. Ed., 8, 114 (1936).
(3) Chandlee, G. C., *J. Am. Chem. Soc.*, 57, 591 (1935).
(4) Klinger, P., and Schliessmann, O., *Arch. Eisenhüttenw.*, 7, 113 (1933).
(5) Simpson, S. G., and Schumb, W. C., Ind. Eng. Chem., Anal. Ed., 5, 40 (1933).

Received December 9, 1936.

Quantitative Spectrographic Analysis

Increased Accuracy in the Logarithmic Sector Method

HARLEY A. WILHELM, Iowa State College, Ames, Iowa

A new eyepiece for making readings on sector lines has internal comparison densities and an internal scale. Results obtained with it on logarithmic sector lines give a mean error per individual reading of ±0.060 mm., which is one-third the error that has been reported for readings made with the ordinary measuring eyepiece. A high degree of accuracy is attainable in the determination of relative intensities of spectrum lines by means of the logarithmic sector and the new eyepiece. The result is an increase in the accuracy of this system of quantitative analysis.

TWYMAN and Simeon (*5*) have described the logarithmic sector method of obtaining relative intensities of spectrum lines, and have discussed the use of this method of photometry in quantitative spectrographic analysis. In this system of quantitative analysis, a metal disk having a logarithmic periphery is placed directly in front of and very close to the slit of a stigmatic spectrograph. Rotation of the disk during an exposure causes the effective time of the exposure to vary along the slit; therefore the lines that are produced on the photographic plate decrease in density along their lengths and fade out at one end.

The lengths of the lines in spectrograms that are produced by this kind of exposure vary according to the intensities of the spectrum lines in the light source. Since the intensities of the lines are dependent on the quantities of the elements giving the lines, accurate readings that are simply related to lengths of lines are necessary in analyses made with the logarithmic sector. The purpose of this paper is to present an accurate, rapid, and convenient method for making readings on such lines.

The common practice in line measurement is to use a low-power eyepiece (containing an internal millimeter scale graduated in 0.1 mm.) directly on the gelatin of the plate which is placed on an illuminated opal glass. The length of a line is determined as the distance from the intense end of the line to a point at which the line seems to fade out.

Consistent results are not always obtained in making such measurements with the ordinary measuring eyepiece because the weaker end points of fading lines are difficult to determine. The analyses are, therefore, subject to considerable error. Errors of ±0.1 and ±0.2 mm. in these measurements are equivalent to errors of ±4.5 and ±9 per cent, respectively, in the intensities of the spectrum lines.

Martin, Burke, and Knowles (*3*) have determined a mean error of ±0.18 mm. per individual reading with an ordinary measuring eyepiece. Some workers who use this method of measurement consider that an average of three independent determinations must be made in order to keep the error within ±0.2 mm.

Many devices and processes for decreasing the errors in line length determinations have been investigated. Smith (*4*) has reviewed several of these investigations, and recently a method for making the measurements by means of a reversed measuring microscope has been described (*3*). However, each of these methods requires additional time, special apparatus, or both; and none shows promise of generally replacing the ordinary measuring eyepiece.

Basis for New Method of Reading Lines

In the "internal standard" method, which is usually employed in a spectrographic analysis by the logarithmic sector, the composite spectrum of the sample includes the spectrum of the unknown quantity of the element being determined and the spectrum of a known fixed quantity of another element, the internal standard. Two lines, one from the spectrum of each of these two elements, make a "line pair"; and the difference in the lengths of these two lines, when referred to a working curve, gives the quantitative result. The working curve is a graph showing the differences in lengths of the lines of the "line pair" for a series of known compositions of the element that is under estimation. Differences in lengths of lines are, therefore, the important values to be determined from spectrograms in this system of analysis.

It has been shown (*3*) from the equation of the logarithmic sector and the Schwarzschild relation that the gradation of density toward the ends of the long and the short lines should be exactly similar. This has been tested at points within 10.5 mm. from the dense ends of the sector lines and found to hold for lines on the same plate. Therefore, if measurements are made from points of a certain density on spectrum lines to the more exposed ends of the lines, the difference in the measured distances on two lines will be exactly equal to the difference in the entire lengths of the two lines. In addi-

tion, if a fixed point on the scale of a measuring eyepiece is always placed on the lines at the points having this density and the scale is read at the intense ends of the lines, the difference in the readings on two lines will be exactly equal to the difference in lengths of the two lines. Differences in such readings will serve the same purpose as differences in lengths of lines for the construction of working curves and for the subsequent analyses.

The internal comparison density eyepiece, described below, is used for making readings from points of equal density on the lines.

The New Eyepiece

The description and use of the comparison density eyepiece, which the present author has designed for the determination of differences in line lengths, are given with the aid of Figure 1.

a and *b* represent two arrangements of the reference spectrum line, *R*, in the field of the eyepiece. An eyepiece with either arrangement can be used in making the readings. The 20-mm. glass scale, *S* (drawn without its 0.1 mm. divisions), the reference spectrum line, *R*, and the lines, D_1 and D_2, that point out comparison densities are within the eyepiece. The lines of the "line pair," *A* and *B*, are on the spectrogram.

The reference spectrum line, *R*, is a sector line that has been removed from a spectrogram and permanently mounted on the glass beside the scale. In order to make this transfer, the original spectrogram and the glass scale are placed in dust-free water and the line, with sufficient gelatin to cover the field of the eyepiece, is cut from the plate by means of a razor blade. The film of gelatin is transferred to the glass scale, and the scale with the adhering gelatin film is then removed from the water. The gelatin is dried in the proper position and then covered with a clear colorless lacquer.

A high-contrast plate of low graininess and a slit of the same width as that used in the analytical work should be used when producing the reference line for the eyepiece. An Eastman spectroscopic Type 144-0 plate (*1*), a slit width of 0.04 mm., and the copper arc spectrum were used in the production of the reference spectrum line for the material presented in this paper.

D_1 is a fine line that points out an easily perceptible comparison density on the reference spectrum line at a point about 2 to 3 mm. from the faint end of the spectrum line. This density corresponds to a point on or near the contrast part of the characteristic curve for the plate and is sufficiently low to allow the eye to distinguish readily between it and another density of slightly different value.

The rest of the optical system and the mounting of the parts of this eyepiece are the same as for the ordinary measuring eyepiece with an internal scale.

A reading on the spectrum line, *A*, is made by placing the eyepiece on the plate in such a manner that *A* appears parallel to and, when possible, between *R* and the scale, as shown in the figure. The scale is then moved along *A* until the density of *A* at D_1 is equal to that of *R* at D_1. With the eyepiece in this position, a reading is made on the scale at the dense end of *A*. The difference in this reading and one made in the same way on *B* gives the difference in lengths of the two lines which is necessary for the analysis.

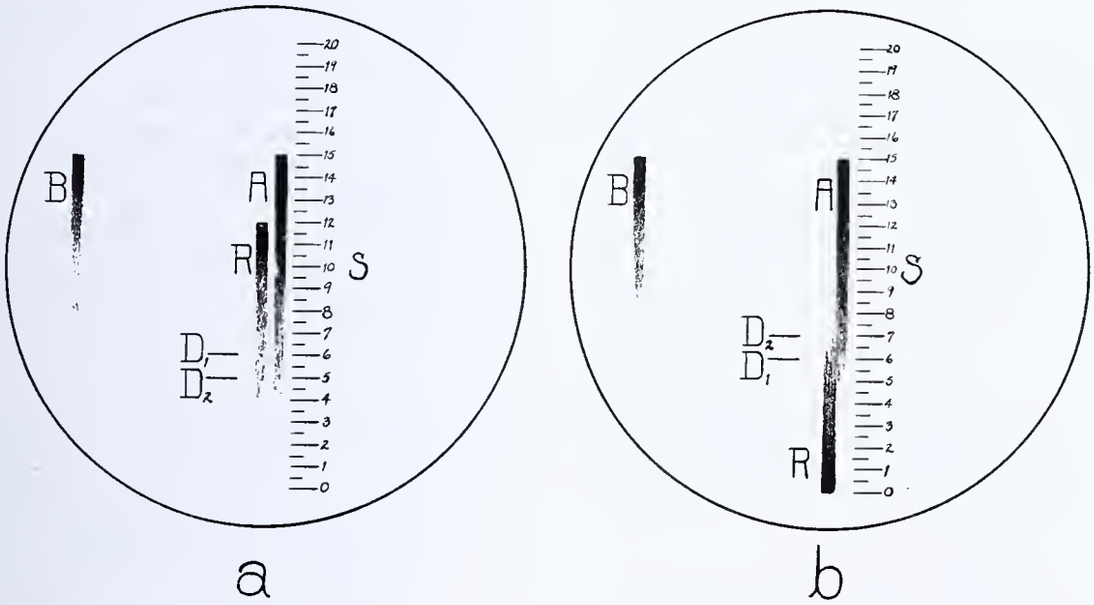

FIGURE 1. DIAGRAM REPRESENTING TWO ARRANGEMENTS OF REFERENCE LINE

Other comparison densities, such as D_2, are used in making readings when singularities exist on the spectrum lines at D_1. Also, a density less than that at D_1 can be used in reading very short lines, and a density greater than that at D_1 can be used in reading exceedingly long lines. In any case, the same comparison density must be used on both lines of the "line pair" in order to get one value for the difference in their lengths.

Although all readings for Table I were made with the reference spectrum line, *R*, fading in the same direction as the line being observed (Figure 1, *a*), the arrangement with *R* fading in the opposite direction to the line being observed (Figure 1, *b*) gives very good results.

Accuracy Obtainable

In order to make an estimate of the mean error of the readings made with the comparison density eyepiece, the copper arc spectrum was recorded by means of a Hilger E.1 spectrograph and the logarithmic sector on Types II-0, III-0, IV-0, and 144-0 Eastman spectroscopic plates (all plates used in this work were developed for 8 minutes at 18° C. in an Eastman developer, Formula D-19); and five lines on each plate were chosen for the test readings. A series of twenty readings, one on each of the five lines on each plate, was taken and then the series repeated until a total of five readings had been made on each line on each of three consecutive days. This gave fifteen nonconsecutive readings, which were made on the scale at the nearest 0.05 mm., for each of the five lines on each plate.

Although the Type 144-0 plate gave best results, the small errors made on Types III-0, IV-0, and 144-0 were practically identical; so the values in Table I, which represent the seventy-five readings that were made on the Type IV-0 plate, give also the order of errors made in the readings on Types III-0 and 144-0.

Series 1, 2, and 3 of Table I show the first three readings that were made on each of the lines on the Type IV-0 plate, and average 1 shows the averages of these readings for each of the spectrum lines. In averages 2, 3, 4, and 5 are the averages by threes for the other twelve series of readings on this plate that are not given in the table, and in average 6 are the averages of the fifteen readings on each line. The mean error per individual reading was determined by com-

paring individual readings with the corresponding values in average 6, and the mean error per average of three readings was determined by comparing averages 1, 2, 3, 4, and 5 with the corresponding values in average 6. These mean errors are arithmetical mean errors that have been increased by ±0.006 mm., the mean error of the mean of seventy-five readings.

Table I. Readings on Type IV-0 Plate

Copper Arc Lines:	2618 Å.	2766 Å.	2824 Å.	2883 Å.	2961 Å.
	Mm.	*Mm.*	*Mm.*	*Mm.*	*Mm.*
Series 1	11.50	11.40	12.60	9.30	13.35
Series 2	11.60	11.35	12.65	9.25	13.25
Series 3	11.50	11.40	12.75	9.40	13.25
Average 1	11.53	11.38	12.67	9.32	13.28
Average 2	11.55	11.42	12.75	9.27	13.30
Average 3	11.55	11.45	12.62	9.20	13.25
Average 4	11.55	11.42	12.65	9.23	13.35
Average 5	11.53	11.35	12.63	9.27	13.28
Average 6	11.54	11.40	12.66	9.26	13.29
Mean error per individual reading					±0.060 mm.
Mean error per average of three readings					±0.034 mm.

Twenty measurements on that portion of the periphery of the sector disk corresponding to the points used in comparing densities on these lines gave a mean deviation of ±0.017 mm. from the calculated values for the logarithmic periphery, and a microscopic examination of this portion of the periphery showed no apparent irregularities.

The lines on the Type IV-0 plate were read anew by using D_2 instead of D_1 as comparison density and the values obtained, when compared with those in Table I, showed, within the limits of error indicated by the table, a common difference that was attributable to the difference in the gradation of the reference spectrum line, R, and the gradation of the lines on the plate. Apparently, the effect of singularities on the readings for the table was negligible and the low mean errors, which indicate the precision of the readings, also represent the accuracy obtained with the comparison density eyepiece on the Type IV-0 plate.

The lower contrast and the graininess of the Type II-0 plate introduced a little more variation in the readings, but calculations based on the seventy-five readings on this plate gave a mean error per reading of only ±0.071 mm. and a mean error per average of three readings of ±0.048 mm.

Readings with the new eyepiece were also made on fogged plates and the errors of readings on these plates seem to be about the same as on clear plates.

The ability to make consistent readings on fogged plates and on plates with graininess and the ability to increase the accuracy of the readings on other plates show definite advantages of the comparison density eyepiece over the ordinary measuring eyepiece. Furthermore, eye fatigue effects are much less and very little is lost in rapidity and convenience in working with the new eyepiece.

According to the equation for the logarithmic sector disk (*5*), the mean errors of ±0.060 and ±0.034 mm. that are given in the table correspond to errors of ±2.8 and ±1.6 per cent, respectively, in the determination of the intensities of spectrum lines. These low mean errors show that the logarithmic sector method can give results that are of the order of accuracy obtainable by the best methods in use for the determination of relative spectrum line intensities by photographic means.

In 1932 Harvey (*2*) pointed out that the determining factor with regard to the accuracy obtainable in quantitative spectrographic analysis by means of the logarithmic sector was the accuracy with which it was then possible to determine differences in line lengths. Therefore, the new eyepiece has increased the accuracy obtainable in spectrographic analysis by the logarithmic sector method; but because of factors that affect the excitation and intensity of a spectrum line, the accuracy indicated by reading with the new eyepiece will not be fully attained in some quantitative determinations.

Literature Cited

(1) Eastman Kodak Co., Research Lab., "Photographic Plates for Use in Spectroscopy and Astronomy," 2nd ed., Rochester, N. Y., 1935.
(2) Harvey, A., *Science Progress*, **106**, 1 (1932).
(3) Martin, L. C., Burke, S. A., and Knowles, E. G., *Trans. Faraday Soc.*, **31**, 495 (1935).
(4) Smith, D. M., "Metallurgical Analysis by the Spectrograph," p. 50, London, Adam Hilger, 1933.
(5) Twyman, F., and Simeon, F., *Trans. Optical Soc. (London)*, **31**, 169 (1929–30).

Received December 11, 1936.

Foaming and Priming of Boiler Water and Condenser Leakage

Electrometric Method of Measurement

RICHARD ULMER, Ohio State University, Columbus, Ohio

The usual methods for measuring carry-over of liquid water into the steam from a boiler are by the steam calorimeter (*3*), electrical conductivity (*2*), and chemical titration (*1*). These methods are time-consuming, require expensive equipment, or give questionable results. This paper describes a new electrometric procedure, accurate and rapid, which requires comparatively inexpensive apparatus.

The method is dependent on the fact that condensed contaminated steam from a boiler or condenser has a different electrical conductance than condensed pure steam. Two cells containing identical electrodes are used. A sample of condensed pure steam (distilled water) is placed in one cell and a sample of the condensed contaminated steam in the other. The contaminating solution (boiler water or cooling water as the case may be) is added from a buret to the cell containing the distilled water until the indicating device shows that the electrical conductance is the same as that of the contaminated condensate in the other cell. This indicates that the concentration of contaminant is the same in each cell and therefore the amount of contaminating solution added is a measure of the amount of contamination. This method directly measures the volume of the contaminating boiler or condensing water and is independent of the concentration of these waters.

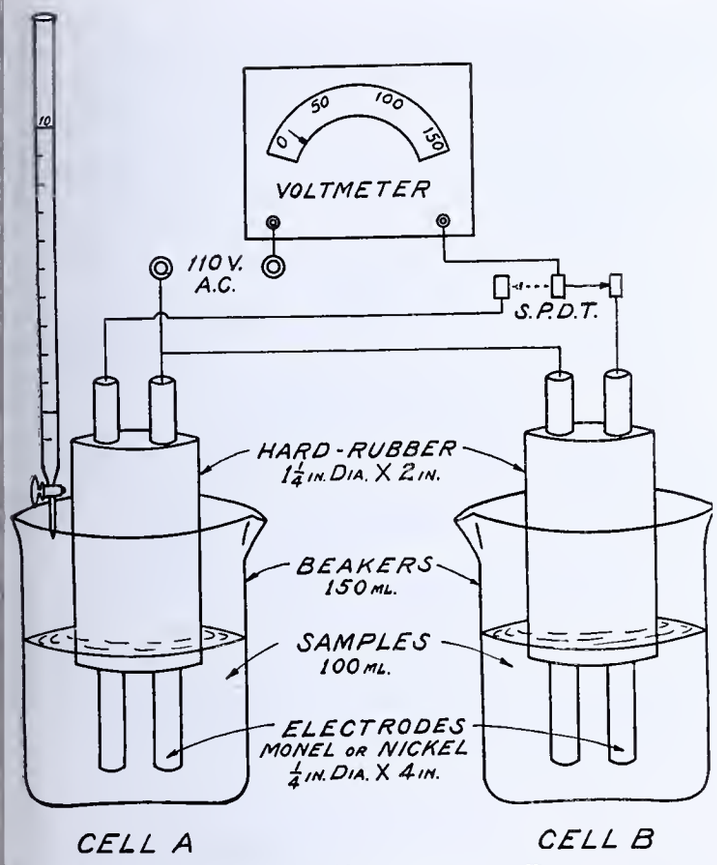

FIGURE 1. APPARATUS FOR ELECTROMETRIC DETERMINATION OF CARRY-OVER AND CONDENSER LEAKAGE

Apparatus

The apparatus employed is shown in Figure 1.

CELLS. The samples are placed in 150-ml. beakers, in each of which is an electrode assembly of Monel or nickel rods 0.65 × 10.8 cm. (0.25 × 4.25 in.) fixed with water-tight connections in 3.2 × 5.1 cm. (1.25 × 2 in.) hard-rubber holders. The distance which the electrodes extend into the solution is adjusted so that they are just covered by a 100-ml. sample, and so that the same voltmeter reading is obtained for each cell when filled with 100 ml. of dilute salt solution at room temperature.

BURET. A 10-ml. buret graduated in 0.05 ml. is preferable, although any ordinary one may be used.

SWITCH. A single-pole double-throw switch is required.

VOLTMETER. Any ordinary alternating current voltmeter with a 0- to 150-volt range may be used, but one with a resistance of about 2500 ohms is most satisfactory for use with a 110-volt alternating current circuit.

At first thought an ammeter would seem more suitable and, of course, one of appropriate range could be used. An outside resistance would, however, be necessary, and since the instrument is employed only as an indicating device, a voltmeter is more practical because it already has a high resistance.

Procedure

FOR CARRY-OVER. Three samples are required, *a*, condensed pure steam leaving the boiler when carry-over is known not to be occurring, or recently boiled distilled water; *b*, condensed steam leaving the boiler when carry-over is suspected; and *c*, a sample of the boiler water obtained at the same time as *b*.

The electrodes in each cell are connected in either a 110- or a 220-volt alternating current circuit with the voltmeter in series as shown in Figure 1. It will be observed that either cell can be thrown in by the switch. Measurements are made as follows:

One hundred milliliters of the sample taken when carry-over was not occurring or 100 ml. of distilled water are placed in cell *A*, and 100 ml. taken when carry-over is suspected, in cell *B*. Voltmeter readings are then taken for both cells. If the readings are the same, indicating that both solutions have the same concentration of electrolytes, there is no carry-over. If the reading for cell *B*, however, is greater than for cell *A*, there is carry-over, the percentage of which is then obtained by adding boiler water (sample *c*) from the buret to cell *A*, until the reading for cell *A* has increased to that for cell *B*. This indicates that the electrical conductance, and hence the concentration of boiler water, is the same in both cells. The number of milliliters of boiler water added gives the percentage of carry-over.

This assumption that the boiler water added to 100 ml. of distilled water is the same percentage as that in 100 ml. of condensed contaminated steam is, of course, not strictly accurate, but the error introduced is negligible, especially in the lower ranges where errors are more significant.

The error introduced by the fact that cell *A* contains more solution than cell *B* is also negligible, as experiment showed.

FOR CONDENSER LEAKAGE. Condenser leakage may be obtained by the same procedure as for carry-over, the samples required being, *a*, condensate entering the condenser, *b*, condensate leaving the condenser, and *c*, cooling water. One hundred milliliters of *a* and *b* are placed in the cells, voltmeter readings are taken, and sample *c* is added to the cell containing *a* until the voltmeter readings are the same for both cells. The volume of cooling water added gives the percentage of condenser leakage.

Experimental

A synthetic boiler water containing 250 p. p. m. of sodium chloride was used in obtaining the results in Table I. Samples in cell *B* were made by diluting a known amount of this standard solution, and distilled water was used in cell *A*. The experiments of Tables I and II were conducted with a set of electrodes having the dimensions shown in Figure 1. All readings were made at 22° C.

Discussion of Results

TABLE I. The difference between any two adjacent readings in columns 2 or 3 shows the sensitivity of the method in the concentration range as given in column 1. As might be expected, the sensitivity is greater at low concentrations than at high and is also greater when using the 220-volt circuit. This greater sensitivity at low concentrations is a decided advantage, because it is in this region that accuracy of measurement is needed. The sensitivity and accuracy of the method increase with the concentration of the boiler water. If this is as much as 1000 p. p. m., a few hundredths of a per cent of carry-over can be detected and measured.

TABLE II. Since the titration of chlorides by the Mohr method is frequently employed in measuring carry-over, the

TABLE I. VARIATION OF VOLTMETER READINGS WITH CHANGE IN CONCENTRATION OF SODIUM CHLORIDE

Sodium Chloride Present	Readings: 110-volt circuit and voltmeter with 150-volt scale and 5364 ohms resistance	Readings: 220-volt circuit and voltmeter with 300-volt scale and 10,760 ohms resistance
P. p. m.	*Volts*	*Volts*
0.0	16.0	53.0
0.5	20.0	65.0
1.0	23.0	76.0
2.0	29.0	93.0
4.0	38.0	115.0
6.0	46.0	133.0
8.0	52.0	147.0
11.0	60.0	161.0
15.0	66.5	174.0
18.0	71.5	180.0
21.0	76.0	185.0
26.0	80.0	191.0
36.0	86.0	199.0
46.0	91.0	205.0
56.0	94.0	209.0
66.0	96.0	211.0

Table II. Comparison of Mohr and Electrometric Methods for Determination of Carry-Over

Sample	Percentage of Carry-Over: Calculated	Electrometric method	Mohr method
1	0.10	00.09	Too low to determine
2	0.20	0.23	
3	1.00	1.02	0.7
4	1.50	1.50	1.3
5	4.00	4.21	4.0
6.	6.00	6.3	6.7
7	7.50	7.8	7.9
8	12.00	12.1	11.4
9	20.00	20.4	19.7
10	30.00	30.3	30.4

results in Table II are of special interest. They show that the Mohr method is of no value if carry-over is much below 1 per cent. The proposed electrometric procedure, however, gives excellent results at such low concentrations.

Detection of Carry-Over

It is evident from the above data that a suitable alternating current voltmeter connected in a 110- or a 220-volt circuit to electrodes in a cell through which condensed steam bled from the line is flowing makes an inexpensive and highly sensitive means for detecting the beginning of carry-over. Although it might be thought that by suitable calibration such an instrument could be used directly for measuring the carry-over, this is not the case unless the concentration of the boiler water is constant, which would be true only under special conditions.

An apparatus similar to the one described above was successfully used by the author over a period of 4 years in a large power plant, both for measuring carry-over and for detecting the beginning of carry-over.

Acknowledgment

This investigation originated during the author's employment in one of the power plants of the Columbus Railway Power and Light Co., and the details were worked out as part of the boiler water studies conducted at the Ohio State University by C. W. Foulk. The author wishes to express his grateful appreciation of the generous aid of the National Aluminate Corporation, of Chicago, and of the Engineering Experiment Station of the Ohio State University.

Literature Cited

(1) Foulk and Groves, Ind. Eng. Chem., 25, 800 (1933).
(2) Hecht and McKinney, *Trans. Am. Soc. Mech. Engrs.*, 53, 11, 139 (1931).
(3) Mathews, F. J., "Boiler Feed-Water Treatment," 4th ed., pp. 77–86, Chemical Publishing Co. of N. Y., Inc., 1931.

Received November 20, 1936.

The Determination of Gold

F. E. BEAMISH, J. J. RUSSELL, AND J. SEATH, University of Toronto, Toronto, Ontario, Canada

A new procedure has been developed for the analysis of gold and its separation from the platinum group of metals. Precipitation is extremely rapid, the gold is easily filtered, and occlusion of the platinum metals is negligible. The precipitation can be made from cold solutions. A considerable number of organic reagents may be used for the determination of gold and the results obtained by means of these reagents are included in this report.

THE separation of gold from the platinum group of metals in an assay bead is generally accomplished by means of reduction with sulfur dioxide, ferrous sulfate, or oxalic acid. The use of ferrous salts is restricted by the difficulties incident to the subsequent separation of iron from the rest of the platinum metals. The authors have had very little success with oxalic acid because of the slow precipitation of gold previously treated with aqua regia and sodium chloride. The gold precipitated by means of oxalic acid separates in a fine state of division which makes the complete filtration difficult and uncertain, and reprecipitation is necessary because of the persistent tendency of the gold to carry palladium with it. Sulfur dioxide precipitates gold from acid solution, but in this case there is a pronounced tendency of the gold to occlude platinum.

The following is a summary of an investigation instigated to find a more efficient reagent for the separation and estimation of gold when present together with the platinum metals. Lenher (*3*), in the report of his attempt to find methods by which derivatives of the aurous type of gold might be prepared, gives a list of photographic developers and other organic reagents which precipitate gold instantly from either acid or alkaline solutions. It was decided to determine whether these reagents could be used for the quantitative estimation of gold and for its separation from the platinum metals.

Precipitation of Gold by Hydroquinone

The weighed sample of gold was dissolved in aqua regia, evaporated to dryness in the presence of sodium chloride, and moistened 3 times with hydrochloric acid, and the residue was dissolved in about 15 cc. of water and 5 cc. of concentrated hydrochloric acid. The solution was filtered through a 7-cm. paper, and the volume was adjusted to 50 cc. by washing, and then brought to boiling. Precipitation was slowly induced by means of 5 per cent aqueous hydroquinone solution (this solution retains its efficiency as a reducing reagent for as long as a week), and then a volume of 3 cc. was added for every 25 mg. of gold. Boiling was continued for 20 minutes, and the mixture was allowed to cool and filtered through a porous-bottomed filtering crucible of grade A2. (These crucibles may be purchased from Staatliche Porzellan Manufaktur, Wegelystrasse 1, Berlin NW 87, Germany, or from the usual apparatus supply houses in North America.) Whatman's 7-cm. No. 42, and Munktell's No. 00 filter paper were used in some cases and found entirely satisfactory. The precipitate was washed with about 100 cc. of hot water. Precautions must be taken at this point to see that all the gold is washed out. Fine particles remain in the bottom of the beaker and can best be

Table I. Precipitation of Gold by Means of Hydroquinone

Gold Added *Mg.*	Gold Recovered *Mg.*	Gold Added *Mg.*	Gold Recovered *Mg.*
4.698	4.700	34.64	34.64
4.477	4.479	36.07	36.09
4.414	4.430	30.83	30.85
27.31	27.31	151.2	151.4
26.44	26.44	151.7	151.9
24.84	24.84	152.5	152.3

observed by means of a flashlight. Small pieces of ashless filter paper may be used to remove any small precipitate of gold which persistently adheres to the walls of the beaker. Beakers of 150-cc. capacity were found most suitable. The results are given in Table I.

Experiments made to determine the efficiency of hydroquinone as a reducing agent for gold from cold 1.2 *N* hydrochloric acid solutions indicated that the reduction was complete after the mixture was allowed to stand for about 2 hours. At the end of 0.5 hour a solution containing 33.79 mg. of gold yielded 33.33 mg. and at the end of 2 hours yielded 33.79 mg. of gold.

Separation of Gold from Platinum and from Palladium

A palladium sulfate solution was made up and by analysis with dimethylglyoxime was found to contain 24.85 mg. of palladium per 25.00 cc. of solution. The weighed sample of spectroscopically pure gold was added to 25.00 cc. of this solution, the mixture was taken to dryness, aqua regia was added, and the nitric acid was removed by 3 evaporations with small amounts of hydrochloric acid in the presence of sodium chloride. The residue was dissolved with the aid of a few drops of hydrochloric acid and the solution was filtered and washed to a volume of 45 cc. Then 5 cc. of concentrated hydrochloric acid were added. The gold was precipitated as previously described and washed to a volume of about 150 cc. of solution. Dimethylglyoxime solution was added directly. The palladium dimethylglyoxime was filtered through a Whatman's No. 42, 11-cm. filter paper and burned according to the standard procedure. The results obtained are given in Table II.

A platinum solution, by analysis with sodium formate, was found to contain 25.75 mg. of platinum per 25.00 cc. of solution. A gold solution was made up to contain 25.07 mg. of gold per 25.00 cc. of solution and by analysis was found to contain 25.04 mg. of gold.

Table II. Separation of Gold from Palladium and Gold from Platinum

Added			Recovered		
Gold	Palladium	Platinum	Gold	Palladium	Platinum
Mg.	*Mg.*	*Mg.*	*Mg.*	*Mg.*	*Mg.*
16.85	24.85	...	16.83	24.85	...
13.70	24.85	...	13.69	24.85	...
17.14	24.85	...	17.10	24.90	...
18.33	24.85	...	18.36	24.85	...
25.07	...	25.75	25.05	...	25.75
25.07	...	25.75	25.03	...	25.70
25.07	...	25.75	25.06	...	25.85

Twenty-five cubic centimeters of each of these solutions were mixed and 5 cc. of concentrated hydrochloric acid added. The gold was precipitated as previously described, except that 3 cc. of 1 per cent hydroquinone solution were used. The filtrate was taken to dryness on a steam bath and the residue baked over a Meker burner for about 5 minutes. The walls of the beaker were exposed to the full flame until the small amount of organic matter was burned off. Aqua regia was added and the platinum dissolved over the steam bath. The cover and the walls were washed down with water and the nitric acid was removed by 3 evaporations with small amounts of hydrochloric acid in the presence of sodium chloride. The walls of the beaker were again washed and the solution was evaporated to dryness. Water was added and the solution filtered through a 7-cm. Whatman's No. 40 paper.

In order to avoid possible loss of traces of platinum, the paper was burned in a large porcelain crucible and the residue dissolved in aqua regia and evaporated to remove nitric acid. About 10 cc. of water were added and the liquid was filtered into the original platinum solution. The volume was made up to about 225 cc., boiled, and adjusted to pH 6 by means of sodium bicarbonate solution and bromocresol purple, as described by Beamish and Russell (*1*). The solution was boiled and the platinum precipitated by careful addition of about 100 to 125 mg. of sodium formate crystals. Boiling was continued for about 45 minutes and the mixture set aside for about 10 hours and filtered. Adhering platinum was removed with 1 or 2 small pieces of ashless filter paper and the residue was washed with 200 cc. of water. It was found that if the precipitate was allowed to stand, filtration was considerably accelerated and addition of an electrolyte to the wash water was not necessary, as in no case did platinum pass through the filtering crucible. The small blank obtained by this procedure was determined and subtracted. The results obtained are given in Table II.

An attempt was made to precipitate platinum directly from the gold filtrate by means of hydrogen sulfide, but it was found that the precipitation was not complete.

Comparison of Hydroquinone and Sulfur Dioxide

When a precious-metal assay bead is parted by means of sulfuric acid, platinum, palladium, and gold appear in the aqua regia extract, accompanied sometimes by small proportions of rhodium, iridium, osmium, and ruthenium; consequently it is necessary to know the effect of the hydroquinone reagent on acid solutions of each of these metals. The authors include results in Table III comparing the action of these two reagents with respect to the properties of occlusion of platinum and palladium. This is done because it has been generally accepted that gold precipitated by means of sulfur dioxide carries with it appreciable amounts of platinum metals. The procedure followed in the case of reduction with sulfur dioxide is that outlined by Hillebrand and Lundell (*2*).

Table III. Occlusion of Platinum and Palladium in the Precipitation of Gold

Reagent	Added			Gold Recovered	Error
	Gold	Platinum	Palladium		
	Mg.	*Mg.*	*Mg.*	*Mg.*	%
Sulfur dioxide	33.79	...	...	33.78	−0.03
	33.79	25.75	...	34.15	+1.07
	33.79	...	25.00	33.81	+0.06
	33.79	...	50.00	33.86	+0.21
Hydroquinone	33.79	...	...	33.81	+0.06
	33.79	50.00	...	33.80	+0.03
	32.19	23.41	22.95	32.30	+0.34
	36.07	23.27	21.04	36.09	+0.06
	33.57	22.93	24.48	33.55	−0.06
	33.79	...	50.00	33.78	−0.03
	168.97	25.75	...	168.73	−0.15

The results indicate that gold precipitated by means of sulfur dioxide carries with it appreciable amounts of platinum and that gold precipitated with hydroquinone does not seem to occlude platinum or palladium when these metals are present up to double the weight of the gold present.

Sodium sulfite reagent was also tried and here again the occlusion of salts produced very appreciable errors.

Experiments were made to determine the effect of hydroquinone on 1.2 *N* hydrochloric acid solutions of rhodium, iridium, osmium, and ruthenium and proved that precipitation did not occur even after standing some days. In the case of platinum when the solution was adjusted to pH 6 and hydroquinone added, no precipitate appeared. When a solution of palladium was adjusted to pH 6 and just sufficient hydrochloric acid added to dissolve the brown oxide, hydroquinone immediately produced a gray precipitate from the boiling solution. The filtrate obtained from this precipitate after the mixture had been left standing for about 1 hour failed to show palladium with either dimethylglyoxime or *p*-dimethylamino benzilidene rhodanine.

Hydroquinone in the Determination of Gold in Alloys

A solution containing 33.83 mg. of gold and 25.0 mg. of copper was evaporated to dryness and taken up with aqua regia, and the nitric acid removed by the usual method. The gold was precipitated from a 1.2 *N* hydrochloric acid solution as previously described and weighed 33.80 mg.

A second solution was prepared containing 25.07 mg. of gold, 7 mg. of nickel, and 5 mg. of zinc. The gold was precipitated from this acid solution and weighed 25.07 mg. A second sample weighed 25.08 mg. Gold was precipitated from two solutions containing the above proportions of gold, zinc, and nickel and the precipitate was left standing in contact with the solution for a period of about 10 hours. The results were 25.16 and 25.16 mg. of gold. This indicates that occlusion occurred, because hydroquinone left in contact with 1.2 *N* hydrochloric acid solutions of nickel, zinc, and copper produced no precipitate. In the case of dental alloys which contain silver, the silver can be removed as the chloride; the remaining solution can be treated directly

for gold after removal of nitric acid. Tungsten interferes, because it precipitates as tungstic acid in acid solutions and must first be removed.

Table IV. Precipitation of Gold by Various Organic Reducing Reagents

Reagent	Gold Added	Gold Recovered
	Mg.	*Mg.*
Amidol (hydrochloride salt of 1,3-diamino-4-hydroxybenzene)	33.83	33.86 33.83
Rhodinal (*p*-aminophenol hydrochloride)	33.83	33.82 33.81
Resorcinol	33.83	33.79 33.83
Pyrogallol	33.83	33.83 33.84
Hydroxyhydroquinone	33.83	33.85 33.82
Phenylenediamine	33.83	33.86 33.82
Pyrocatechol	33.83	33.86 33.83
Photol (sulfate salt of *p*-*N*-methyl aminophenol)	33.83	33.83 33.86
Phloroglucinol	25.07	25.06 25.08
o-Aminophenol	25.07	25.07 25.08
Phenol	33.83	6.82

In view of the fact that hydroquinone precipitates gold so efficiently, it seemed worth while to investigate the possible application of related organic compounds to the estimation of gold. The procedure used for these determinations was identical to that described for hydroquinone. A few of the reagents tried are given in Table IV.

Summary

A 1 per cent aqueous solution of hydroquinone precipitates gold rapidly and completely from 1.2 *N* acid solutions. Occlusion of platinum and palladium is negligible when they are present even in the proportion of 2 to 1 of gold. Hydroquinone will precipitate gold from cold acid solutions but about 2 hours' contact is necessary for complete precipitation.

Hydroquinone precipitates gold directly from acid solutions containing copper, nickel, and zinc and consequently offers a rapid method for the determination of gold in alloys containing these base metals.

Palladium dimethylglyoxime can be precipitated directly from the filtrate of the gold precipitation.

Platinum can be determined in the filtrate from the precipitation of gold after heating the evaporated residue to destroy the organic matter and then digesting it with a little aqua regia.

Acknowledgment

The authors are indebted to E. C. Forbes of the Department of Chemistry for assistance in obtaining some of the results.

Literature Cited

(1) Beamish, F. E., and Russell, J. J., Ind. Eng. Chem., Anal. Ed., 8, 141 (1936).
(2) Hillebrand and Lundell, "Applied Inorganic Analysis," p. 288, New York, John Wiley & Sons, 1929.
(3) Lenher, V., *J. Am. Chem. Soc.*, 35, 547 (1913).

Received November 24, 1936.

The Rapid Analysis of Zinc-Sodium Amalgams

HERMAN A. LIEBHAFSKY, Research Laboratory, General Electric Company, Schenectady, N. Y.

A RECENT study of the reactivities of zinc amalgams (*2*) has shown that the absolute rates at which they are oxidized by various oxidizing agents—e. g., the oxygen of the air—increases only slightly with the concentrations of the amalgams. As a result, concentrated amalgams seem inert; dilute amalgams appear to be extremely reactive. This peculiar behavior of zinc amalgams makes possible a satisfactory, rapid analytical method, which can probably be modified to suit other cases, for the determination of zinc and sodium in zinc-sodium amalgams, provided the zinc concentration exceeds 0.01 per cent.

To a weighed sample of the amalgam in a dry Erlenmeyer flask, approximately twice the volume of standard acid equivalent to the sodium is slowly added from a pipet. The acid and amalgam are gently whirled about in the flask for 20 seconds, at which time violent hydrogen evolution should have ceased. The excess of acid remaining is determined by titrating with standard base, phenolphthalein being used as indicator. The amalgam, which will now contain no sodium and will have lost no appreciable amount of zinc if the procedure has been properly carried out, is next transferred to a cell—e. g., of the H type—where its electromotive force is measured against a concentrated known zinc amalgam as reference electrode with a 1 *M* zinc sulfate–0.05 *M* sulfuric acid solution serving as electrolyte. The unknown concentration of zinc is then calculated from the measured electromotive force by means of the Nernst equation, $E = RT/NF \ln (Zn)_1/(Zn)_2$. (It has long been known that zinc amalgams deviate systematically from the Nernst equation, *1*. The accuracy of the analytical method described above is usually not great enough to warrant considering these deviations; their effect can be minimized by choosing as reference electrode an amalgam of nearly the same concentration as the unknown.)

The results in Table I were obtained by the above method and serve to test its reliability. For analysis 50- to 75-gram samples of known zinc-sodium amalgams were taken; 5 cc. of *N* sulfuric acid, 0.5 *N* sodium hydroxide, zinc amalgams of known concentration for reference electrodes, and the electrolyte solution were the reagents used. The zinc-sodium amalgams were prepared by dilution from more concentrated known zinc and sodium amalgams. The most concentrated (1 per cent) known zinc amalgam was prepared by dissolving a weighed amount of zinc in a weighed amount of mercury in a hydrogen atmosphere; the known sodium amalgam was obtained by dissolving sodium in mercury and determining the sodium content acidimetrically.

Table I. Analytical Results for Zinc-Sodium Amalgams

	1	2	3	4	5	6
Na added, %	0.082	0.063	0.077	0.082	0.040	0.063
Na found, %	0.084	0.062	0.076	0.080	0.038	0.062
Zn added, %	0.87	0.098	0.059	0.0088	0.0030	$1.7(10^{-4})$
Zn found, %	0.88	0.107	0.059	0.0080	0.0024	Nil

The data in Table I and general experience in this laboratory indicate that the analytical method will usually give results accurate to about 2 to 5 per cent, provided the zinc concentration exceeds 0.01 per cent. As the zinc amalgams become more and more dilute, the inertness of which this analytical method makes use tends increasingly to disappear; and the results obtained are consequently low. Table I clearly illustrates this point; for amalgams more dilute than 0.001 per cent, the method is obviously of little value (No. 6).

Literature Cited

(1) Liebhafsky, H. A., *J. Am. Chem. Soc.*, 57, 2657 (1935).
(2) *Ibid.*, 59, 452–8 (1937).

Received November 25, 1936.

Fractionation and Composition of Sulfonated Oils

RALPH HART, 1440 Broadway, New York, N. Y.

A rapid and reliable procedure is given for the quantitative fractionation or separation of the various fatty components contained in sulfonated saponifiable oils. Data obtained as a result of the application of this method to samples of commercial sulfonated olive and castor oils indicate that the reaction between concentrated sulfuric acid and a fatty glyceride is comparatively simple and that no polymers, or very little, are formed. These findings are contrary to the generally accepted view of the sulfonation reaction. The probable composition of each of the fractions separated is given and the probable course of the sulfonation reaction is represented by an equation.

IN THE manufacture of the ordinary commercial grade of sulfonated oil, made from such oils as castor, olive, neat's-foot, etc., the raw oil is usually treated with about 25 per cent of strong sulfuric acid. In the case of glycerides whose fatty acids have either one double bond or one hydroxyl group, this quantity of acid corresponds approximately to 3 moles of sulfuric acid to 4 of the fatty acids. Actual sulfonation, however, occurs only to the extent of 25 to 30 per cent instead of the theoretical yield of about 75 per cent; hence, the ordinary sulfonated oil is a mixture of sulfonated fat, unchanged glycerides, free fatty acids, and polymerized oils. Because of the complexity of the mixture and of troublesome emulsions formed during extractions with solvents, very little headway has heretofore been made in developing a method to fractionate or separate the different components existing in a sulfonated oil.

There seems to be a feeling among users of sulfonated oils, particularly among leather chemists, that a knowledge of the structural composition of a sulfonated oil might help to explain certain variations and nonuniformity sometimes noted in materials treated with such products. This information would also be of great value in determining the nature of the raw oil or oils used in the process and whether or not the sulfonated product contains any admixture of raw oil. Attempts have therefore been made recently to develop methods for fractionating sulfonated oils. The American Leather Chemists' Association (*3, 6*) had appointed a committee, which left the matter pending, to investigate the determination of neutral fat in sulfonated oils. Winokuti, Igarasi, and Yagi (*10*) outlined a procedure for determining neutral fat, fatty acids, and sulfo oil, which is not supported by sufficient quantitative data, and which yields imperfect separations of the components as well as troublesome emulsions during extractions.

Schindler Method

The best known of the fractionation methods is that of Schindler (*1, 7, 8*). The writer finds the method involved, tedious, uncertain, and inexact. Burton and Robertshaw (*2*) state that the Schindler method, although valuable, is very complicated and gives incomplete separation of the fractions, and that when the sulfated oil contains a high proportion of water or added neutral saponifiable and/or unsaponifiable oil, the fractionation does not yield quantitative results. Some changes in the Schindler method proposed by Theis and Graham (*9*) seem to have improved it very little.

New Method

A procedure is here outlined which separates quantitatively (A) sulfo oil, (B) fatty acids, and (C) neutral fat. The method is not affected by admixtures of saponifiable oils, mineral oils, or water, and is applicable to oils of the type of ricinoleic acid as well as oleic acid. The method is accurate and simple, and check results are easily obtained. A complete fractionation in duplicate may be carried out in about 4 hours. The analysis of the various fractions has also led to a theory of the composition of the sulfo oil and of the chemical reactions that may take place between the acid and the glycerides during sulfonation.

During this investigation it was found that no emulsions are formed and that sharp separations occur when a somewhat concentrated solution of sulfonated oil in water, on either the acid or neutral side, is extracted with ethyl ether or petroleum ether. The extractions may be successively repeated any number of times with the same result, but any attempt to wash the solvent layer with water results in unsatisfactory separations. The ether layer, however, is contaminated with a variable but small amount of sulfo oil—the quantity depending upon the efficiency of the extractions and the ratio of solvent to solution. Every effort made to remove the sulfonated oil from the ether layer proved unsuccessful. Although the emulsions formed upon washing with water were easily broken by small quantities of electrolytes, such as sodium sulfate, the sulfonated oil was found to be redissolved in the ether layer.

By the proper proportioning of the solvent and solution, all the neutral fat and the fatty acids may be quantitatively separated from the sulfo oil by extraction with ether. The ether extract, containing the neutral fat and the fatty acids (and some sulfo oil), is then neutralized and the neutral oil is extracted in a similar manner. The water layer from the ether extraction contains the sulfo oil, substantially free from all unsulfonated fractions. By applying a correction factor for the sulfo-oil contaminant in the ether layer, the neutral fat, fatty acids, and sulfo oil may be quantitatively estimated.

Procedure

FRACTION A, SULFO OIL. Dissolve 10 grams of the sample in 25 cc. of water in a 250-cc. separatory funnel and add 50 cc. of ethyl ether, 5 drops of methyl orange indicator (0.1 per cent solution), and 0.5 N sulfuric acid until the lower layer after vigorous shaking and settling is faintly pink. Shake the mixture vigorously for about 1 minute and allow the layers to separate well. Excess water used in dissolving the sample often results in emulsions or the formation of gels, which, however, may be overcome by the addition of 5 to 15 cc. of alcohol. A moderate turbidity in the water layer after this extraction may be disregarded. Separate the two layers and again extract the water layer—which contains the sulfo oil—with two 25-cc. portions of ether.

Add to the water layer in the separatory funnel 10 grams of solid sodium chloride, 5 drops of phenolphthalein solution (1.0 per cent), and 50 cc. of ether, and titrate with 0.5 N sodium hydroxide solution until the lower layer after vigorous shaking and settling is faintly pink. Now add 5 drops of methyl orange and sufficient 0.5 N sulfuric acid with vigorous shaking until the lower layer is again faintly pink. Add enough dry salt

until a slight excess is present. After settling, discard the lower or salt layer, evaporate the ether from the upper layer, and determine the organically combined sulfuric anhydride and the fatty matter in the residue in the usual way—the former preferably by the acid-titration method (*4*). The ratio of fatty matter to combined sulfuric anhydride gives the correction factor to be used in determining the sulfo oil found in the other fractions. The amount thus determined is ultimately added to fraction A.

Fraction B, Free Fatty Acids. To the combined ether layers from fraction A, containing the free fatty acids and the neutral fat, add 25 cc. of a concentrated solution of sodium chloride, 5 drops of phenolphthalein indicator, and 10 cc. of alcohol, and carefully neutralize the free fatty acids with 0.5 *N* sodium hydroxide solution with vigorous shaking until the lower layer is faintly pink. Add sufficient dry salt until there is a slight excess present, and after shaking well and settling, discard the lower layer. Shake the ether layer vigorously with 50 cc. of water, settle and separate the layers, and extract the water layer with two 25-cc. portions of ether.

Table I. Fractional Analysis of Samples of Sulfonated Olive and Castor Oils

	Sulfonated Olive Oil			Sulfonated Castor Oil		
	I	II	Av.	I	II	Av.
	%	%	%	%	%	%
Fraction A, sulfo oil						
Fatty matter, uncorrected	16.8	16.5	16.7	19.4	18.9	19.2
Combined SO_3	3.33	3.39	3.36	3.98	4.01	4.00
Correction factor (fatty matter/combined SO_3)	...	...	4.97	...	...	4.80
Correction for sulfo oil in fraction B	...	...	3.6	...	...	2.0
Correction for sulfo oil in fraction C	...	...	0.9	...	...	...
Total correction for sulfo oil	...	...	4.5	...	...	2.0
Fatty matter, corrected	...	...	21.2	...	...	21.2
Fraction B, free fatty acids						
Fatty matter, uncorrected	24.5	25.3	24.9	28.8	27.6	28.2
Combined SO_3	0.70	0.74	0.72	0.45	0.37	0.41
Correction for sulfo oil	...	...	3.6	...	...	2.0
Fatty matter, corrected	...	...	21.3	...	...	26.2
Fraction C, neutral fat						
Fatty matter, uncorrected	22.3	21.8	22.1	11.7	12.7	12.2
Combined SO_3	0.20	0.16	0.18	...	Trace	...
Correction for sulfo oil	...	...	0.9	...	...	...
Fatty matter, corrected	...	...	21.2	...	...	12.2
Totals						
Fatty matter found	...	...	63.7	...	...	59.6
Fatty matter theoretical	...	...	63.2	...	...	60.2
Combined SO_3 found	...	...	4.26	...	...	4.40
Combined SO_3 theoretical	...	...	4.40	...	...	4.52

Add to the water layer containing the neutralized fatty acid, 50 cc., of ethyl ether, 10 grams of solid sodium chloride, and 5 drops of methyl orange solution, and titrate with 0.5 *N* sulfuric acid with vigorous shaking until the lower layer is faintly pink. Add a slight excess of dry salt, allow the layers to separate completely after shaking, discard the water layer, evaporate the ether in the upper layer, and determine the combined sulfuric anhydride and fatty matter in the residue in the usual manner. In determining the combined sulfuric anhydride in this fraction as well as in the following, boil with the acid for several hours and agitate frequently, to make sure of complete decomposition. Correct for the presence of sulfo oil by deducting the product of the combined sulfuric anhydride contained in this fraction and the correction factor determined in fraction A.

Fraction C, Neutral Fat. Add 25 cc. of saturated salt solution and 5 drops of phenolphthalein solution to the ether layer from fraction B, containing the neutral fat, and neutralize the free fatty acids, if any, with 0.5 *N* sodium hydroxide solution with vigorous shaking until the lower layer is faintly pink. Now add 5 drops of methyl orange indicator and titrate with 0.5 *N* sulfuric acid, shaking vigorously until the lower layer is again faintly pink. Add a slight excess of salt, discard the lower layer after settling, evaporate the ether from the upper layer, and determine the combined sulfuric anhydride and fatty matter in the residue as outlined above. Correct for the presence of sulfo oil as for fraction B. For greater accuracy, the free and combined fatty acids as soap contained in this fraction, which is usually very small, may be calculated from the acid titration, and the result deducted from this fraction and added to fraction B.

Experimental

Samples of sulfonated olive and sulfonated castor oils of approximately the same concentration in fatty matter were fractionated by this method and the results, based on the weight of the original samples, are given in Table I. Under "totals" at the end of the table, the fatty matter and combined sulfuric anhydride are compared with the results obtained by a direct analysis of the original samples, which results are considered to be the correct or theoretical values. In the sample of sulfonated olive oil the fatty matter is practically equally divided among the three fractions; in the case of the sulfonated castor oil, however, the neutral fat is only about half as much (with a corresponding larger amount of free fatty acids in fraction B), and the amount of sulfo oil is about the same as in the other sample.

Purity of Sulfo Oil in Fraction A. To determine whether or not the sulfo oil fraction was substantially free from unsulfonated fat and fatty acids, the water layer containing the sulfo oil after the regular extraction with ether was further extracted with three 100-cc. portions of the solvent, with the results shown in Table II. Because of the small quantities involved, the results for the combined sulfuric anhydride are necessarily approximate. It will be noticed that the total amount extracted is comparatively small and that successive extractions continued to extract some fatty matter, though in decreasing quantities. The ratio of fatty matter to combined sulfuric anhydride indicates that the total residue had approximately the same composition as the sulfo-oil fraction in Table I. It is therefore reasonable to assume that the latter fraction is substantially free from unsulfonated ingredients.

Purity of Free Fatty Acids in Fraction B. To determine whether or not the free fatty acids in fraction B in the case of the sulfonated olive oil contained any neutral fat, the following tests and calculations were made: The saponification value of the desulfated fatty matter of this fraction was determined and found to be 190.8. The alkali equivalent of the free fatty acids in this fraction, determined as given in the method, was found to be 34.5 mg. of potassium hydroxide per gram based on the original sample, corresponding to 18.1 per cent of free fatty acids (34.5/190.8), compared with 21.1 per cent actually found. A similar result was obtained for the sample of sulfonated castor oil. While the discrepancy between the calculated fatty acids and the fatty matter found may indicate the presence of some neutral oil, the difference is small and of slight practical importance, and it is believed that a more careful analysis would bring the results into closer agreement. Furthermore, some experiments carried out with the neutral fat fraction, discussed below, indicate that all the neutral fat and unsaponifiable matter had probably been quantitatively extracted; hence, the discrepancy probably indicates some polymerization.

Table II. Successive Extractions of Fraction A with Ethyl Ether

Sample	Extraction No.	Volume of Ether	Fatty Matter	Combined[a] SO_3
		C.	%	%
Sulfonated olive oil	1	100	2.2	0.50
	2	100	1.1	0.18
	3	100	0.7	0.18
	Total	300	4.0	0.86
	(Fatty matter/combined SO_3)[a]			4.65
Sulfonated castor oil	1	100	1.5	0.32
	2	100	1.2	0.23
	3	100	1.2	0.16
	Total	300	3.9	0.71
	(Fatty matter/combined SO_3)[a]			5.49

[a] Approximate.

Purity of Neutral Fat in Fraction C. The free fatty acids and combined sulfuric anhydride in this fraction were found to be from a trace to 1.5 mg. of potassium hydroxide for the former and from a trace to 0.25 per cent for the latter,

based on the original samples. These results indicate that the neutral fat fraction is comparatively free from either of these ingredients. To determine whether or not all of the neutral fat in the original sample is contained in this fraction, 100 parts of the sulfonated olive oil were mixed with 50 parts of neutral raw olive oil and the mixture was analyzed for neutral fat. The quantity found was 48.4 per cent, compared with the theoretical value of 47.5. In calculating the theoretical value it was assumed that the neutral fat in the original sample was equal to a 21.2 per cent in accordance with Table I. As a further check, the same oil was mixed with half its weight of mineral oil and the combined neutral fat and unsaponifiable were determined. The latter was then saponified and the mineral oil determined in the usual way. The amount recovered was 32.8 per cent, compared with the theoretical value of 33.3 per cent. The latter does not include the small amount of unsaponifiable matter naturally occurring in the oil.

Composition of Sulfonated Oils

A study of the data obtained in the fractional analysis of sulfonated olive and castor oils, discussed above, has led to some very interesting speculations as to the probable composition of each of the fractions separated and also as to the reactions that may take place during the sulfonation process. It has heretofore been assumed by many investigators that the reactions are very complicated, resulting in the formation of many involved polymers, but this investigation does not bear out these assumptions. The data obtained in this study and the conclusions arrived at follow.

Sulfonated Olive Oil. *Fraction A, Sulfo Oil.* The complete data obtained for the uncorrected sulfo oil in fraction A, Table I, are given in Table III. According to Jamieson (*5*), olive oil consists of 80 to 85 per cent of oleic acid, 4 to 7 per cent of linoleic acid, and the rest saturated fatty acids. For the purpose of this discussion it is assumed that the fatty acids in sulfonated olive oil consist entirely of the oleic acid type and also that the saponification value found for the desulfated fat, which has undoubtedly suffered some hydrolysis and condensation during the heating with mineral acid, is the same as for the fatty matter in the sulfo oil before decomposition. According to Table III, the composition of the sulfo oil corresponds approximately to 40 per cent free fatty acids; sulfonated oil, 80 per cent of maximum sulfonation; and 20 per cent unsaturated oil. In other words, out of every 5 fatty acid residues, 2 consist of free fatty acids, 4 are completely sulfonated, and 1 contains a double bond. There seems to be only one feasible composition that meets with all these conditions—namely,

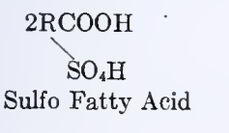

Sulfo Fatty Acid

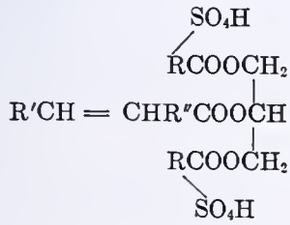

Disulfo Triglyceride

That is, the sulfo oil apparently consists of only two sulfonated compounds—namely, sulfo fatty acids and disulfo triglycerides and precisely in the proportion of 2 molecules of the former to 1 of the latter. The triglyceride may be either symmetrically or unsymmetrically sulfonated.

Fraction B, Free Fatty Acids. It has already been shown that this fraction consists almost entirely of simple free fatty acids. The desulfated fat had a cloud test of 30° C. and a solidification point 1° lower. It had an iodine value of 40.8, indicating that more than half of the unsaturated bonds in the original had been converted to hydroxyl groups, which would also serve to explain the comparatively low saponification value obtained for this fraction—namely, 190.8 instead of about 200 for olive oil fatty acids. Evidently considerable sulfonation had at first taken place but the product decomposed before it was finished.

Table III. Analysis of Sulfo Oil in Fraction A of Sample of Sulfonated Olive Oil

	Based on Original Sample	Based on Desulfated Fatty Matter
Fatty matter, %	16.7	100
Saponification value[a, b]	...	190.0
Acidity, mg. of KOH per gram	13.7	82.0 ≈ 40% ± free fatty acids
Combined SO_3, %	3.26	20.1 ≈ 80% ± of maximum sulfonation
Iodine No.	...	19.2 ≈ 20% ± unsaturated
Cloud test, ° C.	...	38
Solidification point, ° C.	...	33

[a] Sulfonation equivalent as SO_3 = 26.3%.
[b] Iodine equivalent = 86.0

Fraction C, Neutral Fat. The fatty matter of this fraction had the lowest solidification point—namely, 21° C.—a saponification value of 180.8, and an iodine number of 52.5. The low iodine number indicates that sulfonation followed by decomposition has taken place almost to the same extent as in the case of the free fatty acids in fraction B. However, the saponification value is 10 points lower than for fraction B—namely, 180.8 compared with 190.8; hence, the average molecular weight of the fatty matter in this fraction must be greater than for the fatty acids fraction. This indicates that at least part of the neutral fat must be in the form of glycerides, since the polymers would have a lower average molecular weight. Moreover, the extent of the difference in the saponification values indicates, assuming that the nature of the fatty acids is alike in both fractions, that the neutral fat is practically all in the form of glycerides and that practically no polymers can be present. The neutral fat, as shown below, consists probably of di- and triglycerides.

Sulfonated Castor Oil. The sulfo oil in fraction A of the castor oil sample had an iodine number of 77.8, indicating very little sulfonation on the double bond. The degree of sulfonation was about equal to that of the olive oil—namely, about 80 per cent—and the acidity corresponded to about 50 per cent of free fatty acids instead of 40 per cent. It is therefore assumed that the composition of this fraction is similar to that of the corresponding fraction of the olive oil sample, with the exception that the number of double bonds in the former is practically the same as for the raw castor oil.

The free fatty acids in fraction B had an iodine number of 78.9 and an acidity of 176 mg. of potassium hydroxide per gram of desulfated fat. These data indicate that the free fatty acid is nearly all pure ricinoleic acid, with the possibility of a small percentage of polymerized fatty acids. The neutral fat fraction has an iodine number of 81.8 and its composition, as in the case of the olive oil sample, is probably a mixture of di- and triglycerides of ricinoleic acid.

Reactions during Sulfonation

After a careful consideration of the data obtained in this investigation, it is suggested that the following reactions occur when neutral olive oil is treated with concentrated sulfuric acid in the usual commercial practice. Similar reactions probably hold true also for castor oil, except that a

larger amount of free fatty acids is formed because of the greater ease with which the triglyceride of ricinoleic acid is hydrolyzed.

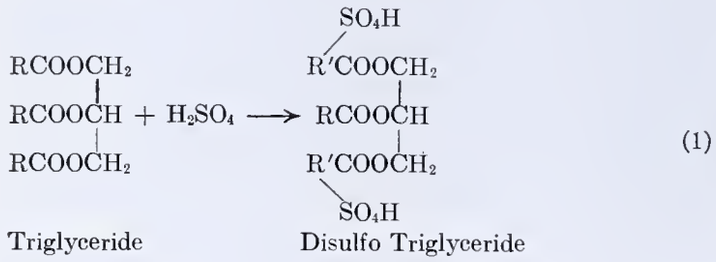

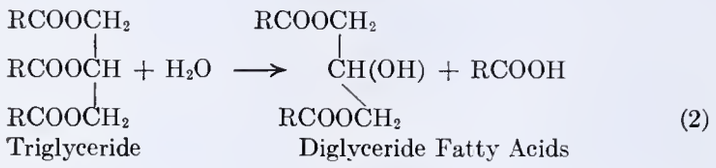

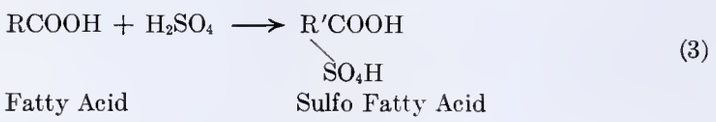

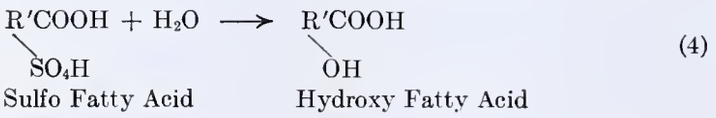

Four reactions seem to take place—namely, the triglyceride is sulfonated, yielding a disulfo triglyceride, probably symmetrically arranged; one-third of another molecule of triglyceride is hydrolyzed, yielding a diglyceride and free fatty acids; the free fatty acid is sulfonated, giving sulfo fatty acid; and finally part of the sulfonated glyceride and fatty acid is decomposed to yield the corresponding hydroxy compounds. These reactions, with the exception of the partial and total hydrolysis of the glyceride and the decomposition of the sulfo oils, may be represented by the following equation:

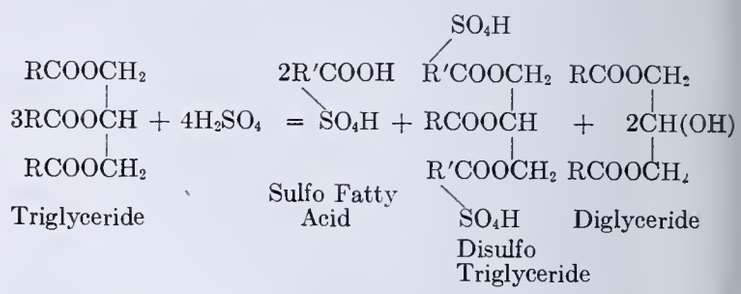

The unsulfated di- and triglycerides would be found in the neutral fat fraction and the sulfo fatty acid and the disulfo triglyceride would be found in the sulfo-oil fraction. The composition of the sulfo oil according to this equation corresponds to the analytical data obtained for this fraction. Hydrolysis of the disulfo triglyceride and the sulfo fatty acid would account for the low iodine numbers obtained for the neutral fat and the free fatty acids, respectively.

Acknowledgment

The writer is indebted to Morris Mytelka of this laboratory for assistance with the analytical work.

Literature Cited

(1) Burton and Robertshaw, *J. Intern. Soc. Leather Trades' Chem.*, **13**, 522 (1929).
(2) *Ibid.*, **17**, 3 (1933).
(3) Hart, R., *J. Am. Leather Chem. Assoc.*, **24**, 576 (1929).
(4) Hart, R., et al., *Am. Dyestuff Reptr.*, **22**, 695 (1933).
(5) Jamieson, G. S., "Vegetable Oils and Fats," A. C. S., Monograph Series, p. 93 (1932).
(6) Priest, G. W., et al., *J. Am. Leather Chem. Assoc.*, **24**, 570 (1929).
(7) Schindler, W., *Collegium*, **1928**, 255.
(8) Schindler and Schacherl, *J. Intern. Leather Trades' Chem.*, **14**, 344 (1930).
(9) Theis and Graham, *J. Am. Leather Chem. Assoc.*, **28**, 51 (1933).
(10) Winokuti, Igarasi, and Yagi, *Tech. Repts. Tohoku Imp. Univ.*, **10**, 387 (1932).

RECEIVED December 11, 1936.

Average Diameter of Particles Just Passing the 325-Mesh Sieve

STEWART S. FRITTS, Edison Cement Corporation, New Village, N. J.

IN THE determination of the specific surface in terms of square centimeters per gram as given by the Wagner turbidimeter (*2*), it is generally assumed that the 325-mesh sieve separates the fraction at 60 microns, although actually it has an aperture of 44 microns. This difference assumes major proportions when calculating the surface area of any finely divided substance such as Portland cement. The errors involved amount to as much as 200 sq. cm. per gram in the finer high-early-strength cements, while for the ordinary grades (1400 to 1900 surface area) the errors may be from 50 to 150 sq. cm. per gram.

About a year ago Traxler and Baum (*1*) made a very comprehensive study of the Wagner turbidimeter and set forth several conclusions and limitations as to its use for the determination of the size distribution of particles in finely divided powders. One of their conclusions was that the 325-mesh sieve separated at nearly 45 microns (*1*).

The largest particle passing a No. 325 sieve is usually assumed to have an average diameter of about 60μ because a square opening measuring 43μ on a side has a diagonal of about 60μ. If only two dimensions (length and breadth) of particles just passing this sieve are measured by means of the microscope, the average diameter usually appears to be 60 μ. However, by measuring the three axes of a large number of particles just passing a No. 325 sieve it was found that the average diameter is nearer 45μ.

In an effort to clarify some of this work the writer has applied Stokes' law in so far as it pertains to the use of the Wagner turbidimeter.

The material under consideration was that issued by the U. S. Bureau of Standards, No. 46r, for the calibration of the No. 200-mesh sieve. It was carefully washed through the 325-mesh sieve having a correction factor of −0.5 to the residue. The retained material was dried in the oven, and 0.3 gram of the residue was prepared for suspension in accordance with the standard method of procedure as applied to the Wagner turbidimeter. The micro-

Table I. Particle Size Determination

(F_0 = 23.00)

Micron	Test No. 1	Test No. 2	Test No. 3
60	21.90	22.05	22.40
55	22.40	22.50	22.70
50	22.70	22.90	22.90
45	22.90	23.00	23.00
40	22.90	23.00	23.00
35	22.90	23.00	23.00
30	22.90	23.00	23.00
25	22.90	23.00	23.00
20	22.90	23.00	23.00
15	22.90	23.00	23.00
10	22.90	23.00	23.00
7.5	22.90	23.00	23.00

ammeter was adjusted to give a reading of 23.00 through the ank plus the clear kerosene, with the light filter remaining in place throughout the period of the test. The suspension was hen agitated, and placed in the path of the light, and readings vere taken as the kerosene in the timing buret passed the marks corresponding to the particle sizes 60, 55, 50, 45, 40 ..... 7.5 nicrons, and recorded in Table I.

Test 1 consisted of the standard procedure for preparing the uspension, where the sample is placed in a test tube with about 5 cc. of kerosene, stirred for 1 minute, transferred to the tank, nd diluted to 335 cc., oleic acid being added to the original mixure to act as a dispersing agent.

Test No. 2 consisted of modifying the procedure by adding he sample to about 100 cc. of kerosene in the tank together vith the oleic acid (8 drops) and stirring the mixture for 1 minute s before. The difference was in the elimination of the close ontact between the brush and the walls of the test tube, thereby emoving all possibilities of a grinding action of the brush on the aterial under consideration.

Test 3 consisted of merely agitating the mixture of the sample, lus oleic acid, plus 335 cc. of kerosene by rotating the tank hrough 180° for approximately 1 minute.

It may be seen that for all tests the particles have either dropped out of suspension or approached a constant value at 45 microns, indicating that the 325-mesh sieve separates at 45 microns and not 60 microns as originally supposed. As for test 1, it may be concluded that the brush has some effect in grinding, although the data may indicate more complete dispersion where the material is in more intimate contact with the agitating medium, which in this case is the brush. This appears to be beyond the purpose of the present paper.

Another point is the introduction of correction factors to the various sieves and in particular the 325-mesh sieve. The standard specifications (A. S. T. M. Designation E11-26) permit a tolerance of 90 per cent in the maximum opening of the No. 325 sieve or a maximum aperture of 84 microns on the side. Consequently, since manufacturing conditions will not permit the fabrication of a perfect sieve having apertures of 43 (or 44) microns, it is necessary to introduce correction factors, either plus or minus, in order to establish some standard or reference value. This is a regular procedure as practiced by the process industries using sieves as a basis of fineness control. The designation of the aperture alone should establish the nominal size of the particles.

The data, as presented from a new viewpoint, give additional experimental proof that the 325-mesh sieve separates at an average particle diameter of 45 microns.

Literature Cited

(1) Traxler, R. N., and Baum, L. A. H., *Proc. Am. Soc. Testing Materials*, **35**, Part II, 457 (1935).
(2) Wagner, L. A., *Ibid.*, **33**, Part II, 553 (1933).

Received November 27, 1936.

A New Reagent for the Detection of Cerium

J. F. MILLER, School of Chemistry and Physics, The Pennsylvania State College, State College, Pa.

INVESTIGATION of various substituted phenylarsonic acids as possible reagents for the determination of cerium evealed a specific colorimetric reaction between ceric cerium nd arsanilic acid. A deeply colored solution formed imediately upon the addition of the reagent to a sulfuric acid olution of ceric ammonium sulfate.

Solutions

Arsanilic acid: a 5 per cent solution of the sodium salt of sanilic acid prepared from Eastman arsanilic acid.

Stock ceric solution: 4.5148 grams of G. F. Smith & Co. ric ammonium sulfate, dissolved in 1 liter of solution, 0.5 *M* sulfuric acid.

Standard ceric solution: 10 cc. of the stock solution, diluted to liter with 0.5 *M* sulfuric acid, giving a solution containing 10 rts per million of cerium.

Experimental

Solutions were made up from the standard ceric solution ntaining 2, 3, 4, and 5 parts per million of cerium. Upon e addition of arsanilic acid solution to 50 cc. of these solons, a pink color, easily distinguishable from blanks conining equivalent amounts of cerium but no reagent, was tained. The intensity of the color produced varied directly th the concentration of cerium present, but was not afted by the concentration of the reagent nor the acidity up 2 *N* sulfuric acid. Acidities above this were not investited. In more concentrated solutions of cerium the color oduced is red-brown.

Ceric cerium can be detected by this reagent in the presence of cerous cerium and the other rare earths. In this investigation it was easily detected in the presence of the following ions: thorium, praseodymium, neodymium, lanthanum, samarium, erbium, terbium, scandium, yttrium, sodium, potassium, ammonium, cupric, beryllium, magnesium, calcium, zinc, strontium, aluminum, titanic, germanium, stannic, vanadate, arsenate, bismuth, molybdate, tungstate, uranyl, manganous, ferric, nickel, nitrate, phosphate, chloride, and acetate.

Fluorides, even in small concentrations, interfere. Zirconium precipitates with the reagent; on filtering, the filtrate is clear, and the precipitate from solutions containing 30 parts per million of cerium has a red color. Zirconium alone gives a white precipitate. Cobalt and chromium, because of the color of the ions, interfere. Cerium can be detected in solutions in which the concentration is about 10 parts per million and that of the other ions is about 100 times as much, except in the cases of cupric, ferric, tungstate, and uranyl, where the cerium concentration must be 20 parts per million and that of the other ions only 50 times as much. For vanadate the concentration of cerium must be 50 parts per million and that of vanadate only 20 times as much. The color obtained is usually pink or red-brown. Care must be taken to avoid excess reagent when thorium is present, as this precipitates slightly.

The tests were made by placing 0.5 cc. of stock ceric solution in a 50-cc. Nessler tube, adding enough of the other ion to give a concentration of 1000 parts per million, and then diluting with 0.5 *M* sulfuric acid to within 5 cc. of the mark. Arsanilic acid solution was then added to the mark and the

solution shaken or stirred. The formation of a pink or red-brown color when compared with a blank indicated a positive test for ceric cerium.

In applying this test to the determination of the presence of cerium in a mineral, the usual methods of decomposition of the mineral are satisfactory, except that the resulting solution must be free of fluorides. Columbium and tantalum are only slightly soluble in most acid solutions not containing fluorides, and it is assumed that they will be removed with silica. After decomposition and solution, the cerium must be oxidized to the ceric state by use of sodium persulfate, sodium bismuthate, or any of the other oxidizing agents used for cerium. The solution may then be tested by addition of 5 cc. of arsanilic acid solution to 50 cc. of the solution. The production of a pink or red-brown color indicates cerium.

An investigation was made of the quantitative possibilities of arsanilic acid as a reagent for cerium, but it was found unsatisfactory for exact work. This is due to a slow fading of the color produced by the reagent in dilute solutions of cerium, or to the formation of a red-brown precipitate in the case of more concentrated solutions. These interferences are noticeable even in the short time of 2 minutes. Precipitation in the case of concentrated solutions is not complete.

Arsanilic acid was investigated as a possible indicator for ceric sulfate titrations, but was found to be unsatisfactory as an inside indicator. When used as an outside indicator, the results obtained in the titration of ferrous iron checked with those obtained using *o*-phenanthroline ferrous complex as indicator.

Summary

The red-brown color produced by arsanilic acid with ceric solutions is very sensitive and can be used in the qualitative detection of cerium in the presence of the elements with which it is commonly found. Fluoride, zirconium, cobalt, and chromium interfere.

The reaction is unsatisfactory for exact quantitative work.

Arsanilic acid can be used as an outside indicator for ceric sulfate titrations, but not as an inside indicator.

Received November 21, 1936.

Examination of Rubber Latex and Rubber Latex Compounds

I. Physical Testing Methods

H. F. JORDAN, P. D. BRASS, AND C. P. ROE
Development Department, United States Rubber Products, Inc., Passaic, N. J.

Physical testing methods for the control of processing of rubber latex are reviewed critically, and methods for measuring accurately the pH, viscosity, and surface tension of preserved and compounded latices are recommended. An improvement in the high-speed stirring test for the "mechanical stability" of latex is described.

PRECISE control is essential to the successful operation of any commercial process, particularly of those processes involving the use of rubber latex. Latex is, of course, a complex natural product; it contains a variety of nonrubber constituents, such as proteins, soaps, and others which control or influence its colloidal properties. In order to ensure uniform behavior of latex in process, it is obviously desirable to test its uniformity as a raw product. It is furthermore important that such tests should be, wherever possible, fundamentally sound and free from the personal equation. Unless the results can be expressed in basic fundamental units, which are independent of the apparatus used and of the operator, confusion will result.

It is the purpose of this paper to review critically the more important general physical tests and methods of analysis which can be applied to latex, particularly from the standpoint of accuracy and sources of error, and to recommend certain procedures on the basis of commercial experience in the authors' control laboratories. Some of the recommended methods have been developed in these laboratories, while others have been improved over procedures given in earlier works on latex (*3*, *6*, *9*). Part I is concerned with physical tests such as pH, surface tension, viscosity, and mechanical stability, while Part II is concerned with analytical methods.

Sampling

It may appear superfluous to discuss methods of sampling latex, which are based on the same principles as sampling for any type of analysis. However, in view of the tendency of any type of latex to cream to a greater or less extent, it cannot be stressed too strongly that care should be taken to obtain a sample which is representative of the entire lot of material.

In the case of latex in drums, particularly concentrated latex, it is advisable to stir with a high-speed stirrer of the propeller type for a period of 10 to 15 minutes before taking the sample. In the case of tank-car lots, the latex should be agitated with an air line which should be moved from one end of the car to the other, and agitation should be continued for at least one-half hour.

Measurement of pH

The pH of latex is probably one of its most important properties, inasmuch as it is related in a fundamental way to the stability of the latex as a colloid. However, only one of the methods which are generally employed for the measurement of pH is adapted to the accurate measurement of the pH of latex.

Indicators are unsatisfactory even for approximate measurements on account of protein errors and difficulties in matching colors. In view of the fact that the glass-electrode apparatus is commercially available, the use of indicators is to be avoided entirely.

The hydrogen electrode is also unsuited for use in latex, on account of the ease with which it is poisoned by certain sulfur-containing proteins and traces of hydrogen sulfide. Other difficulties are also encountered, such as frothing of the latex and a tendency for rubber to deposit on the electrode.

The quinhydrone electrode can, of course, be used only in solutions having pH values lower than 8, or below the pH region of most common practical interest in latex processing. For this reason its use in latex has not been extensively investigated in these laboratories. This electrode has, however, been used extensively by van Harpen (*5*) for measurements of the pH of natural latex.

TABLE I. COMPARATIVE pH VALUES

Samples	Total Solids, %	pH Determined by Glass Electrode *A*	pH Determined by Antimony Electrode *B*	Difference $(B-A)$
Normal latex				
A[a]	30	8.64	8.71	+0.08
B[a]	30	9.46	9.88	+0.42
C[a]	30	9.86	10.27	+0.41
D[a]	30	10.60	11.02	+0.42
E[a]	30	11.96	12.14	+0.18
F	30	9.57	10.11	+0.54
F	35	9.56	9.87	+0.31
G	37.9	9.89	10.26	+0.37
H	36.9	10.31	10.70	+0.39
I	39.3	9.62	10.03	+0.41
Concentrated latex				
A	30	9.46	9.58	+0.12
B	30	9.14	9.32	+0.18
C	30	9.32	9.56	+0.24
3-X creamed latex				
A	30	11.16	11.26	+0.10
B	30	10.60	10.51	−0.09

[a] Modified.

Before the glass electrode was manufactured commercially by Leeds & Northrup and other companies, considerable careful work was done on the calibration and use of the antimony electrode. While the potentials were sufficiently reproducible in buffer solutions to indicate that an accuracy of 0.1 to 0.3 pH could be obtained (depending upon the pH of the solution), the accuracy was found to be less in the case of latex. This is indicated in Table I by a comparison of pH values obtained for latices of various types by means of the antimony electrode and glass electrode, respectively, both of which were carefully calibrated with standardized buffer solutions. All the samples listed were diluted to 30 per cent total solids before measurement, except where indicated.

Inspection of Table I indicates that the difference in pH values between the two electrodes becomes less as the latex is purified to a greater degree—for example, the greatest difference is in normal latex, and the least difference is in the case of three-times-creamed latex. It is well known that hydroxy acids such as citric and tartaric acids, as well as certain sugarlike substances, affect the potential of the antimony electrode. It appears probable that some serum constituent of one of these types is responsible for the difference in results.

These data show that the pH values obtained with the antimony electrode are from 0.1 to 0.5 unit higher than those obtained with the glass electrode. While these differences are reasonably constant for the normal latices tested, this does not necessarily indicate that measurements with the antimony electrode can be accurately corrected to obtain the true pH. It seems entirely possible that samples of latex obtained from different plantations might require corrections of different magnitudes because of differences in the kinds and concentrations of serum constituents. Of course, the antimony electrode cannot be used in latex compounded with sulfur, sulfur-containing accelerators, and certain other chemicals. The use of the antimony electrode is not recommended for latex work.

The glass electrode when properly used is believed to be the most reliable and accurate means for measuring the pH of latex. Very constant and reproducible potentials are obtained, and there is no evidence that the glass electrode is poisoned or affected by any of the latex constituents or common compounding ingredients, with the exception of sodium hydroxide and sodium salts. However, the glass electrode is an empirical electrode and the values obtained by it in latex cannot be checked by a basic standard electrode such as the hydrogen electrode.

Full descriptions of the construction of the electrode and the potentiometric setups are given in manufacturers' pamphlets and in the literature (*7*).

Briefly, the complete cell is as follows:

Standard half-cell (calomel or quinhydrone)	0.120 *N* HCl (pH = 1.0)	glass	solution or latex pH = X	standard half-cell

That portion of the entire potential which measures the pH is, of course, the one arising at the glass-solution interface.

There are certain experimental precautions which have been found advisable on the basis of considerable experience in control work. While the commercially available glass shells are made with remarkable reproducibility, the calibration charts furnished with the glass electrode or printed on the dials of potentiometers of various types are not sufficiently accurate for all electrodes, particularly after the electrodes have been used in alkaline solutions for a considerable length of time. It is advisable to calibrate the electrodes daily in buffer solutions which have been standardized with the hydrogen electrode. The following buffer solutions have been found to be particularly practical for this purpose and if properly stored in stoppered Pyrex containers, they will remain at a constant pH for a period of 2 or 3 months.

Solution I:	
1.0 *N* KOH	50 cc.
2.0 *N* acetic acid	50 cc.
Distilled water to make (pH about 4.5)	500 cc.
Solution II:	
Anhydrous $KHCO_3$	10 grams
1.0 *N* KOH	50 cc.
Distilled water to make (pH about 10.0)	500 cc.

From the calibration data is obtained a calibration chart (pH versus e. m. f.) by drawing a straight line through the two experimental points. More careful calibrations have indicated that this procedure is justified.

On account of the high resistance of the glass electrode, it is necessary to use a very sensitive galvanometer. The Leeds & Northrup type 2500B is generally satisfactory for use with their glass-electrode shells, although difficulties are encountered if the galvanometer cannot be insulated from vibration. A vacuum-tube galvanometer which is marketed by the Hellige Company has been used successfully in control work. The Beckmann acidimeter, which is a portable vacuum-tube potentiometer, has been used successfully in one of the divisions of the company.

On account of the high resistance of the glass electrode, leakage of current around the electrode is occasionally encountered during humid weather unless proper precautions are taken. Such leakages are characterized by difficulty in balancing the circuit and by erratic behavior of the galvanometer. These difficulties can be eliminated by shielding

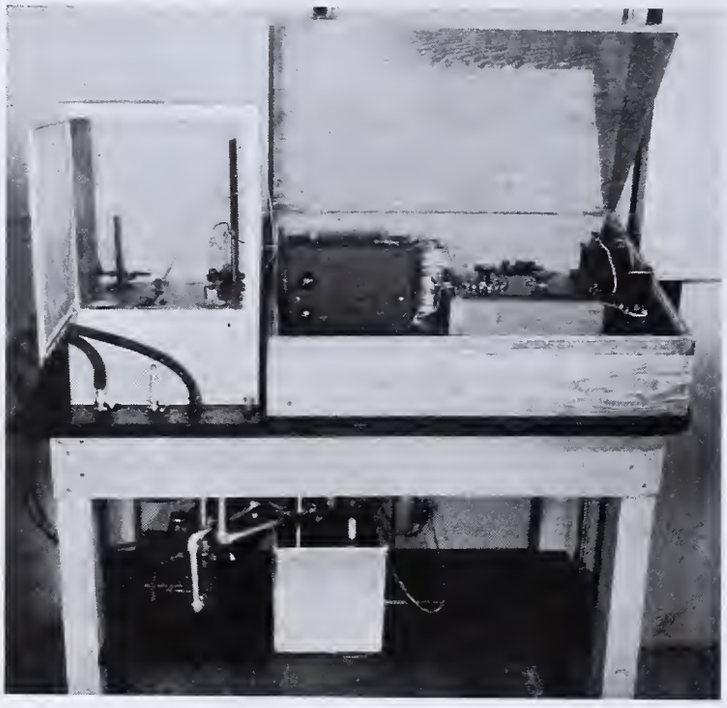

FIGURE 1. pH APPARATUS AND THERMOSTAT

the glass-electrode apparatus, and by making the leads to the galvanometer as short as possible. A suitable setup of this kind is illustrated in Figure 1. The glass electrode and calomel half-cell are enclosed in a metal box with a screen door, and water from a thermostat is pumped through the bottom of the container.

It cannot be too strongly emphasized that the potential of the glass electrode is affected by certain metallic ions above pH 9 to 10, one of the most important of which is sodium ion. This is illustrated by the graph taken from Dole (*1*) which shows the variation in salt error of the glass electrode with pH in solutions containing different metallic ions. In alkaline solutions above pH 10, the potential of the glass electrode is depressed by sodium ion and to a lesser extent by potassium ion. This means that pH measurements of alkaline latices containing sodium hydroxide or sodium soaps would be considerably in error.

Surface Tension

The surface tension of latex is often assumed to be an indication of the foaming and related properties of latex. This relationship has not been too clearly established, but inasmuch as considerable importance is often attached to surface tension values, a standard and accurate procedure should be used for measuring them. Of the methods available, the capillary-rise and bubble-pressure methods are unsuitable. Accurate results can be obtained by the drop-weight method, but the technic is somewhat more cumbersome than is desirable for control.

The ring method is simple in manipulation and gives accurate values if the results are calculated properly. However, very inaccurate results are often obtained because no attention is paid to the important corrections required for the experimental data. Inasmuch as the theory and experimental technic have been treated by Freud and Freud (*2*), and by Harkins and Jordan (*4*), only the more common sources of experimental error will be discussed in this paper.

In outline, the ring method consists in determining the maximum pull of the liquid on a circular wire ring when the ring is withdrawn, and from this pull the surface tension can be calculated. A number of types of apparatus have been developed, all of which consist in principle of a torsion, spring, or chainomatic balance. Directions for operation are given in manufacturers' pamphlets, but the following experimental points should be stressed:

Great care should be taken to maintain scrupulous cleanliness. Glassware should be cleaned with chromic acid solution, and the ring, after cleaning in chromic acid, should be heated to red heat in the oxidizing portion of a Bunsen flame. In this connection care should be exercised to make sure that any salts or latex have been removed from the ring before flaming, or serious damage will result. The wire of the ring should all lie in one plane and the ring should hang in such a way that its plane is parallel to the surface of the liquid.

One of the most common sources of experimental error is that the liquid is often contained in too small a dish, or in a watch glass, with its surface open to evaporation in the air. Accurate measurements can be obtained under such conditions only by accident. It is preferable that the liquid be contained in a fairly large dish which is enclosed in a deep vessel, as illustrated in Figure 3. The outer vessel is covered with a plate with a hole in its center of sufficient size to permit connection of the ring to the balance arm with a fine platinum wire. This is particularly important in the case of latex because of the tendency of this material to "skin over" on its surface. Such skinning over, although invisible to the eye, may increase the values obtained by several dynes. In order to ensure a fresh surface, it is advisable to overflow the inner dish before making measurements.

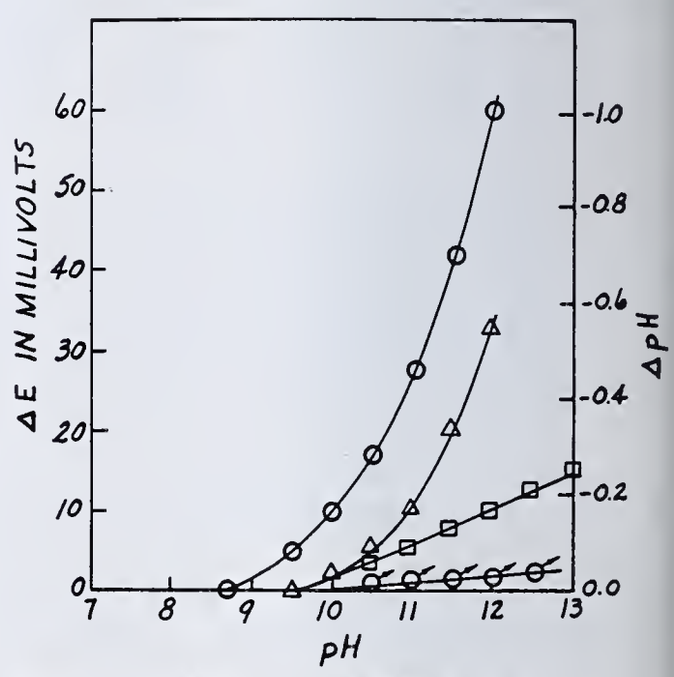

FIGURE 2. ERRORS OF GLASS ELECTRODE IN 1 *N* SOLUTIONS (AFTER DOLE)

△ Li^+, ○ Na^+, □ K^+, ♂ Ba^{++}

Another common source of error lies in the assumption that either the scale gives values directly in dynes per cm. or, in the case of certain apparatus, that the reading in grams is correct. It is important that the balance be directly calibrated in grams, and that the surface tension be calculated from the total pull on the ring by the method given below.

Many surface tension results obtained by the ring method which have appeared in the literature are of no value because it has been incorrectly assumed that the surface tension is related to the pull on the ring by the equation

$$\gamma = \frac{Pg}{4\pi R}$$

where P is the total pull in grams on the ring, g is the acceleration of gravity, and R is the radius of the ring. In order to obtain correct surface tension values, the right-hand member of the above equation must be multiplied by a correction factor to give the equation

$$\gamma = \frac{Pg}{4\pi R} F$$

where the correction factor, F, is a function of $\frac{R^3}{V}$ and $\frac{R}{r}$. V is the volume of liquid raised by the ring above the free surface and is equal to the total pull in grams divided by the density. $\frac{R^3}{V}$ is therefore equal to $\frac{R^3 d}{P}$. $\frac{R}{r}$ is the ratio of the radius of the ring to the radius of the wire from which it is made, and its value is generally given by the manufacturer.

FIGURE 3. SURFACE TENSION APPARATUS

Tables of correction factors for various values of $\frac{R^3}{V}$ and $\frac{R}{r}$ are given by Harkins and Jordan (*4*). From these tables a correction curve for any particular ring (whose $\frac{R}{r}$ value is of course constant) can be constructed. Unless such corrections are made, the results may be considerably in error, depending upon the dimensions of the ring and the material measured.

This is illustrated by the following comparison of corrected and uncorrected ring method results with results obtained by the drop-weight method (Table II). The latices were diluted as indicated in the second column.

In the case of the ring used in these experiments, the uncorrected results obtained by the ring method are approximately 3 dynes per cm. higher than the correct values.

Considerable difficulty has been found in obtaining reproducible results on latex if the total solids content is substantially above 40 per cent, because the viscosity is sufficiently great to prevent the liquid from attaining its equilibrium shape in a reasonable length of time. For this reason, it is desirable to make surface tension measurements on concentrated latex at a standard condition—as, for example, 40 per cent total solids and 0.5 per cent ammonia.

Viscosity

The flow properties of latex and latex compounds are frequently of importance in the handling and processing of

TABLE II. COMPARATIVE RESULTS

	Total Solids	Scale Reading	Total Pull (P)	Surface Tension: Ring method[a] Uncorrected	Ring method[a] Corrected	Drop-weight method
	%		Gram	Dynes per cm.		
Normal latex, A	30	38.7	0.316	38.7	35.6	35.9
Concentrated latex, A	40	34.9	0.285	34.9	31.9	32.2
Concentrated latex, B	40	39.0	0.318	38.9	35.9	35.7
Benzene	—	30.7	0.251	30.8	28.0	28.2[b]

[a] R = 0.637 cm., R/r = 38.8.
[b] Value taken from International Critical Tables.

these materials. As illustrations may be cited dipping and spreading processes. For practical reasons it is convenient to treat the flow properties of latex in a special way, introducing some new terminology. It will be found that viscosity data can be expressed in this terminology in a form which is convenient in the making of practical calculations.

THEORETICAL. A Newtonian or perfectly viscous liquid is characterized by the existence of a linear relationship between an impressed shearing stress and the rate of shear produced. The coefficient of viscosity of such a liquid is defined as

$$\eta = \text{coefficient of viscosity} = \frac{\text{shearing stress per unit area}}{\text{rate of shear produced}} \quad (1)$$

and is a constant over the range of shearing stresses in which the liquid does not exhibit turbulence. The situation is pictured by the solid straight line OX in Figure 4, and the coefficient of viscosity is equal to the reciprocal slope of the line OX.

Liquids in which the relationship between shearing stress and rate of shear is not linear are termed non-Newtonian. Latex is such a non-Newtonian liquid, and a typical stress-rate of strain diagram is shown by the solid line in Figure 4. Now the definition of the coefficient of viscosity remains unchanged in the transition from Newtonian to non-Newtonian liquids and is defined by Equation 1. It is thus plain that the value of η for a non-Newtonian liquid is not a constant over the range in which no turbulence occurs. For instance, η

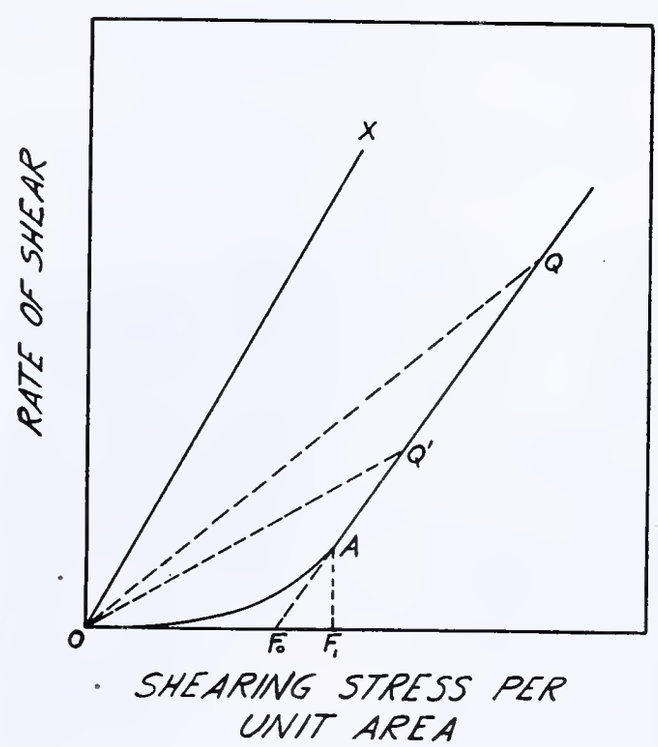

FIGURE 4. SHEARING STRESS–RATE OF SHEAR DIAGRAM
For a Newtonian liquid (OX) and for a Non-Newtonian liquid like latex ($OAQ'Q$)

at Q in Figure 4 is the reciprocal slope of OQ, whereas η at Q' is the reciprocal slope of OQ'. Consequently in the case of a non-Newtonian liquid it is impossible to use the coefficient of viscosity at one shearing stress to calculate the rate of shear at another shearing stress.

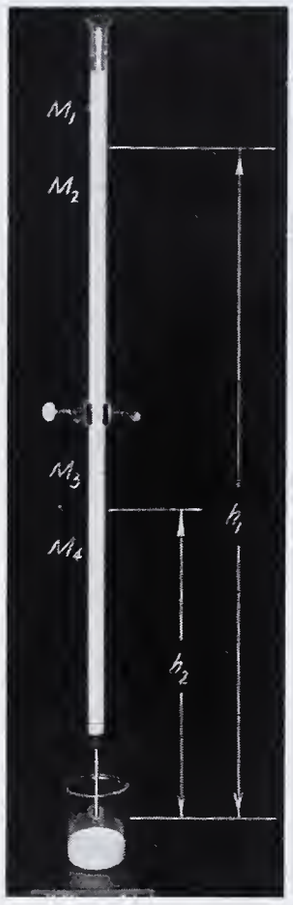

FIGURE 5. CONTROL CAPILLARY VISCOMETER

It is an experimental fact that the stress-rate of strain diagram of latex becomes a straight line for a range of shearing stresses above a given value. This situation is represented by the portion of the solid curve to the right of A in Figure 4. As the shearing stress increases, the coefficient of viscosity of the non-Newtonian liquid approaches the reciprocal slope of the straight portion of the curve. These considerations suggest the following definition in connection with non-Newtonian liquids:

η' = limiting coefficient of viscosity

= reciprocal slope of straight portion of stress-rate of strain curve

In the case of a Newtonian liquid the quantity η determined at a single shearing stress completely specifies the flow properties of the liquid throughout the shearing stress interval in which no turbulence occurs, since the straight line constituting the stress-rate of strain curve passes through the origin of the stress-rate of strain diagram. This is not true in the non-Newtonian case, and in order to complete the specification of flow properties in the straight portion of the curve, it is necessary to know the stress intercept of this straight portion, produced. This stress intercept is denoted by F_0 in Figure 4 and is called the yield point.

The quantities η' and F_0—i. e., limiting coefficient of viscosity and yield point—are constants for any given latex, and from them may be calculated the flow properties of the latex at any point on the straight portion of the stress-rate of strain curve by means of the equation

$$g(F - F_0) = \eta' S \qquad (2)$$

where F = absolute shearing stress per unit area in grams per sq. cm.
F_0 = yield point
g = acceleration of gravity
S = absolute rate of shear

This method has the advantage over the use of true viscosity that only two quantities, η' and F, must be dealt with instead of a series of values, η.

This treatment ignores the nonlinear portion of the stress-rate of strain curve in Figure 4, but it should be clearly realized that the introduction of this treatment was intended solely to simplify calculations of flow properties of latex in the linear portion of the stress-rate of strain curve. Many practical problems fall within this classification. In cases in which the nonlinear portion of the stress-rate of strain curve must be dealt with, it is probably best to resort to the use of true viscosity.

METHODS. In the experience of the authors, two methods of measuring viscosity have been used and found satisfactory for control work: the capillary-flow method and the rotating-cylinder method. Both provide rapid and precise means of measuring the flow properties of latex. The former possesses the advantage that the apparatus may be made from materials stocked in the laboratory. For the control of raw latex the capillary-flow method employing the simple apparatus shown in Figure 5 fulfills all requirements, but with many compounds either a modified capillary-flow apparatus (Figure 6) or a rotating-cylinder viscometer (Figure 7) must be resorted to.

The rotating-cylinder apparatus possesses a wider field of applicability than the capillary-flow setup, but the details of its construction make it rather expensive. The rotating-cylinder method can be made to replace the capillary method in all departments of latex work with the exception of normal latex, which has such a low viscosity as to be out of the most useful range of the rotating-cylinder apparatus with dimensions specified by Mooney and Ewart (*8*). Data on viscosity and limiting viscosity as obtained by these two methods are found to be in good agreement if the points obtained on the stress-rate of strain diagram are on the straight portion of the curve. Yield point results show variations, particularly in compounds of high viscosity. There are reasons for feeling that the rotating-cylinder values are more reliable. These difficulties are probably traceable to the fact that latex does not possess an actual yield point. It is easily shown that the yield value as calculated on the basis of preceding definitions is actually to some extent dependent on the nature of the nonlinear portion of the real stress-rate of strain diagram.

Recent work on the falling-sphere method has resulted in apparatus which may very likely be suitable for use in latex. The writers have had no experience with this method. In general the capillary-flow and falling-sphere methods possess a disadvantage when compared to the rotating-cylinder method—namely, that they are dynamic rather than kinematic methods, and require a knowledge of the density of the material under test.

In order to render the results of viscosity measurements comparable, it is necessary to carry out all determinations on a given type of latex at the same total solids content. A precaution which should be observed in preparing the latex

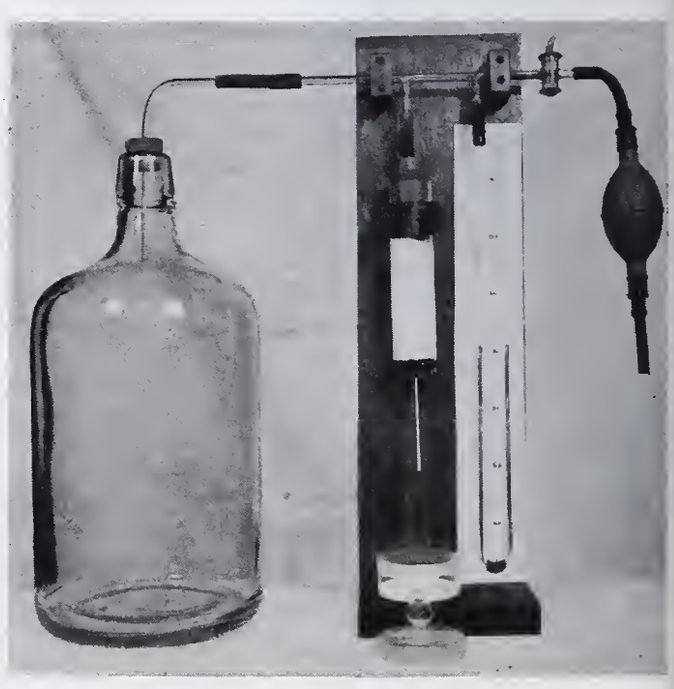

FIGURE 6. MODIFIED CAPILLARY-FLOW APPARATUS

for measurement is to eliminate all gas bubbles. This may be done by deaerating the latex under reduced pressure for several hours.

Capillary-Flow Method. In the capillary-flow method of measuring viscosity the shearing stress is usually produced by the hydrostatic pressure of the liquid above the capillary tube. The apparatus is pictured in Figure 5. It consists of an 80-cm. glass tube 1 cm. in inside diameter with scratches M_1, M_2, M_3, M_4 as shown and a capillary tube of known dimensions inserted in the lower end of the 80-cm. tube by means of a rubber stopper. The method consists of measuring the lengths of time necessary for two equal given volumes of latex, as estimated by the passage of the meniscus through two intervals bounded by scratches on the 80-cm. tube, to flow through the capillary under two different hydrostatic pressures. In terms of Figure 5 the following dimensions have been found suitable for the manipulation of latex:

h_1 and h_2 = heights of midpoints of intervals M_1M_2 and M_3M_4, respectively, above bottom of capillary (h_1 = 65 cm.; h_2 = 30 cm.)
R = radius of capillary (R = 0.040 ± 0.002 cm. for normal latex; R = 0.070 ± 0.004 cm. for creamed or centrifuged latex)
L = length of capillary (10 cm.)
V = volume included in each of intervals M_1M_2 and M_3M_4 (10 cc.)

The numerical values of h_1, h_2, R, and L are so chosen that the two stresses under which the rates of flow are measured both fall on the linear portion of the stress–rate of strain diagram.

With the aid of the following additional notation it is possible to write down formulas for viscosity and yield point in terms of the above characteristics of the apparatus:

t_1 and t_2 = times in seconds for latex meniscus to pass through intervals M_1M_2 and M_3M_4, respectively
d = density of latex in grams per cc.
g = acceleration of gravity (980.6 grams per second per second)
T = temperature in ° C.
η = coefficient of viscosity in poises at temperature T
η_{25} = coefficient of viscosity in poises at 25° C.
η' = limiting coefficient of viscosity in poises at temperature T
η'_{25} = limiting coefficient of viscosity in poises at 25° C.
F_0 = yield point in grams per sq. cm. at T° C.
V = volume of latex (= weight of latex/density of latex)

Then

$$\eta' = K_1 \frac{t_2 t_1}{t_2 - t_1}$$

$$F_0 = K_2 - K_3 \frac{\eta'}{t_2}$$

where

$$K_1 = \frac{\pi R^4 g d\,(h_1 - h_2)}{8\,LV}$$

$$K_2 = \frac{3Rh_2d}{8L}$$

$$K_3 = \frac{3V}{\pi R^3 g}$$

In the testing of highly viscous samples a modified capillary-flow apparatus is sometimes desirable. The modification consists of augmenting the hydrostatic pressure used in the simple apparatus by means of an external superimposed pneumatic pressure. The apparatus for this procedure is pictured in Figure 6. The pneumatic pressure is developed with the aid of a syringe bulb by pumping air into the large glass bottle reservoir shown in the figure. When the desired pressure, as read on the U-tube differential manometer, has been attained, the stopcock in the line leading to the syringe bulb is closed and latex is allowed to flow through the capillary for a given length of time into a large weighing dish. The latex is weighed to an accuracy of 1 per cent, and the process is repeated at one or more different values of the impressed pneumatic pressure. It will be noted that the 80-cm. tube of the simple apparatus has been replaced by a short tube of much larger diameter. The following additional notation will be necessary in order to write down formulas:

d_1 = density of latex in grams per cc.
d_{Hg} = density of mercury in grams per cc.
P_1 and P_2 = pneumatic pressure in cm. of mercury
h_1 and h_2 = average heights in cm. of top of latex column above bottom of capillary at pressures P_1 and P_2, respectively
w_1 and w_2 = weights in grams of liquid delivered at pneumatic pressures P_1 and P_2, respectively, in times t_1 and t_2, respectively

$$\eta' = K_4 \frac{d_{Hg}(w_2P_1 - w_1P_2) + d_1(w_2h_1 - w_1h_2)}{w_1w_2} \frac{t_1t_2}{t_2 - t_1} d_1$$

$$F_0 = K_5P_2 - K_6 \frac{\eta' w_2}{d_1 t_2}$$

where

$$K_4 = \frac{\pi R^4 g}{8L}$$

$$K_5 = \frac{3R}{8L}$$

$$K_6 = \frac{3}{\pi R^3 g}$$

Rotating-Cylinder Method. In this case the shearing stress is produced by falling weights which, by means of a system of strings and pulleys, cause rotation of the cylinder. The complete theoretical expression for the instrument constant may be found in the afore-mentioned article by Mooney and Ewart, but it is too complex to be reproduced here. The form of the equation from which the viscosity of a Newtonian liquid may be calculated from rotating-cylinder viscometer data is, using the same notation as in the discussion of the capillary flow method with some additions

$$\eta = KMt \qquad (3)$$

where K = instrument constant, experimentally determined (with standard liquid)
M = total mass of weights and pans
t = time in seconds for one revolution of rotor

The procedure in going to non-Newtonian liquids is very similar to that employed in discussing the capillary flow

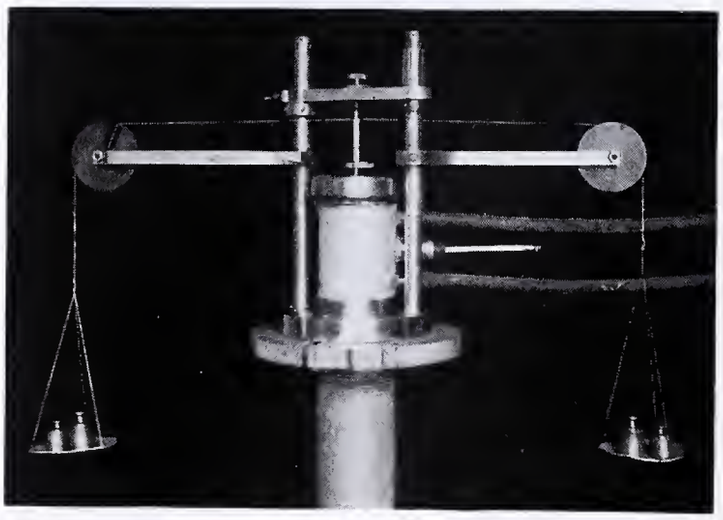

Figure 7. Rotating-Cylinder Viscometer

method. Instead of two pressure heads, two values of M are employed.

Then
$$\eta' = K(M_1 - M_2)\frac{t_2 t_1}{t_2 - t_1} \quad (4)$$

The value of M corresponding to the yield point F_0 is

$$M_0 = M_2 - \frac{\eta'}{Kt_2} = \frac{M_2 t_2 - M_1 t_1}{t_2 - t_1}$$

$$F_0 = LM_0 \quad (5)$$

where

$$L = \frac{3C}{4\pi^2 R_0^2 l_0 \left[1 + \frac{R_0}{3l_0 \sin \Theta_0}\right]} \quad (6)$$

C = circumference of pulleys
R_0 = mean radius of inner and outer cylinders as defined by

$$\frac{1}{R_0^2} = \frac{1}{2}\left[\frac{1}{R_1^2} + \frac{1}{R_2^2}\right]$$

R_1 and R_2 being the radii of the rotor and stator, respectively
Θ_0 = mean angle between bottom of stator and bottom of rotor
l_0 = effective length of cylindrical section of rotor

Temperature Correction. The capillary methods as described above have the disadvantage that thermostatic temperature control is difficult. However, if measurements are made within a few degrees of 25° C., it has been found satisfactory to correct the viscosity values for temperature by means of the following equations:

$$\eta_{25} = \eta\ [1 + 0.02\ (25 - T)] \quad (7)$$
$$\eta'_{25} = \eta'\ [1 + 0.02\ (25 - T)] \quad (8)$$

These equations are of a form which is known to be valid over small temperature intervals for water. The data of the following table permit the calculation of an average temperature coefficient for viscosity measurements in latex of 2.2 per cent per degree Centigrade, but the accuracy of the data is not sufficient to warrant considering the difference between 2 and 2.2 per cent as significant. In short, Equations 7 and 8 represent the best available method of temperature correction of viscosity data. Over a 5° interval on each side of 25° C. they are sufficiently accurate for practical purposes,

Figure 8. Apparatus for Mechanical Stability Test

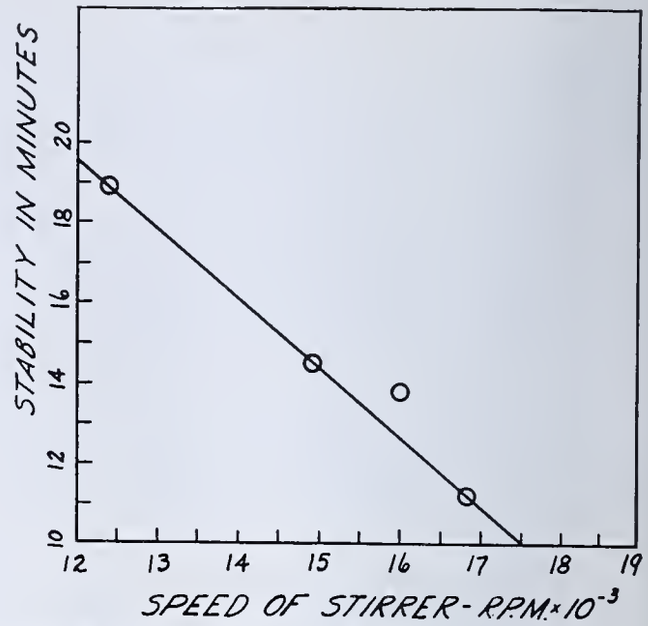

Figure 9. Relation of Mechanical Stability to Speed of Stirrer

except in the case of latices of very high total solids content or those highly thickened with soaps, gums, etc.

Temperature, ° C.	At Total Solids: 44%	46%	48%	50%
25.0	8.50	10.0	11.4	14.2
30.6	7.78	9.62	10.4	12.3
36.1	6.24	7.91	9.24	10.0

Relation between η and η'. As a matter of interest the following relation between the true and limiting coefficients of viscosity is listed:

$$\eta = \eta' \frac{F}{F - F_0} \quad (9)$$

where F is the absolute shearing stress

Mechanical Stability

In the course of handling and processing, latex is often subjected to violent shearing stresses produced by mechanical treatments such as pumping and stirring, which tend to destabilize it. When it is considered that such situations as these are rather frequently encountered, it is unfortunate that there is no adequate means of evaluating the ability of all types of latex to withstand the effects of mechanical agitation. A major hindrance to the setting up of a general mechanical stability test lies in the lack of any precise concept of stability. The notion is a rather vague one at best and varies considerably in different connections.

In the experience of the authors, the high-speed stirring test is the only one which gives results even approximately in accord with the practical stability behavior of latex. The test, apparatus for which is shown in Figure 8, consists of stirring a sample of latex until it coagulates. The stirring is done by means of a small slotted propeller blade which is driven by a high-speed Hamilton Beach motor. It fails in two cases: (1) in very thick compounds, (2) in compounds containing foaming agents. In the first case, the propeller blade tends to beat out a cavity in the latex so that actual stirring ceases after a short time. In the second case, the entire sample may be whipped to a very stable foam which will not coagulate. In uncompounded normal, creamed, and centrifuged latex and in many latex compounds, however, the high-speed stirring test for mechanical stability possesses the most practical advantages of any test known to the authors at present.

The customary procedure for measuring mechanical

stability has been modified in two important details. These are (1) the application of a correction for the speed of the motor, and (2) the method of selecting the end point. Another item of importance is temperature control.

The speed at which the latex is stirred has been found to produce an inverse linear variation of the time required for coagulation. The data to support this conclusion, presented here, were obtained on one normal latex at 26.4 per cent total solids at various motor speeds.

Speed of Motor *R. p. m.*	Stability *Min.*
12,400	18.9
14,900	14.3
16,000	13.8
16,840	11.2

From the data a table of correction factors to 15,000 r. p. m., the arbitrarily chosen standard speed, can be constructed (Table III).

TABLE III. CORRECTION FACTORS

Speed of Motor *R. p. m.*	Correction Factor
12,000	0.74
12,500	0.77
13,000	0.80
13,500	0.85
14,000	0.90
14,500	0.94
15,000	1.00
15,500	1.07
16,000	1.14
16,500	1.22
17,000	1.32

When a mechanical stability value is obtained at a motor speed different from 15,000 r. p. m., multiplication of the observed value by the appropriate correction factor from Table III will give the value which would have been obtained at 15,000 r. p. m. For example, if a stability of 10 minutes were obtained at a motor speed of 13,500 r. p. m., then the corrected stability would be given by $10 \times 0.85 = 8.5$ minutes. The motor speed should be measured with a tachometer at a standard time, say 30 seconds, after the beginning of a determination.

In the case of the end-point selection in this determination, personal errors have been eliminated by the following means:

A milliammeter is connected in series with the motor, and current consumption is plotted against time from the beginning of the determination. When coagulation sets in, the general tendency of the current consumption will be to increase as the load on the motor is increased by adherence of coagulum to the propeller blade. During the first stages of coagulation, there are frequent large jumps in the current consumption, occasioned by pieces of coagulum which adhere to the blade and are then thrown off, thus causing short periods of alternate labor and racing on the part of the motor. Readings should be continued until there is a steady and rapid rise in current consumption with time, an occurrence caused by complete coagulation of the sample. The time at which this rise starts is taken as the end point.

For purposes of temperature control of the sample under test, the base of the stand on which the motor is mounted should be provided with a water jacket through which water at a standard temperature, say 25° C., can be circulated. This control is of considerable importance, since a difference of 10° in temperature may make a large difference in the stability value obtained.

Literature Cited

(1) Dole, "Experimental and Theoretical Electrochemistry," p. 433, New York, McGraw-Hill Book Co., 1935.
(2) Freud and Freud, *J. Am. Chem. Soc.*, 52, 1772 (1930).
(3) Génin, "Chimie et Technologie du Latex de Caoutchouc," Chap. 3, Paris, Revue Générale du Caoutchouc, 1934.
(4) Harkins and Jordan, *J. Am. Chem. Soc.*, 52, 1751 (1930).
(5) Harpen, N. H. van, "Electrometric Determination of the Hydrogen-Ion Concentration in the Latex of Hevea Brasiliensis and Its Applicability to Technical Problems," Medan, Varekamp and Co., 1930.
(6) Hauser, "Latex," Chap. 4, New York, Chemical Catalog Co., 1930.
(7) McGavack and Rumbold, IND. ENG. CHEM., Anal. Ed., 3, 94 (1931).
(8) Mooney and Ewart, *Physics*, 5, 350 (1934).
(9) Noble, "Latex in Industry," Chap. X, New York, *The Rubber Age*, 1936.

RECEIVED September 18, 1936. Presented before the Division of Rubber Chemistry at the 92nd Meeting of the American Chemical Society, Pittsburgh, Pa., September 7 to 11, 1936.

Laboratory Distillation and Vacuum Flash Unit

C. E. WINTERS AND J. E. HEDRICK, Kansas State College, Manhattan, Kans.

APPARATUS for the distillation of petroleum, whether used for the evaluation of crudes and distillates or for the preparation of samples for research and development, must be capable of giving sharp fractions in sufficient quantity for refining and analyses. The methods described by Scheumann and Stewart (*2*) and the elaborate unit developed by Podbielniak (*1*) are notable examples of what has been done. However, in smaller laboratories, or where crude and distillate fractions are needed only at infrequent intervals, such equipment cannot be used. The need is for a simple, inexpensive unit which can be quickly assembled and dismantled when not in use, yet is capable of giving the desired separations.

A simple and inexpensive combination atmospheric distillation and vacuum flash unit is here described for distilling crudes and for solvent recovery. The apparatus, shown in the diagram, is made from standard laboratory equipment, has a capacity of about 4 liters (1 gallon) per hour, gives sharp cuts, and can be run continuously.

This particular unit was built for running crude oil to lubricating distillate semicontinuously. It consists of two distillation outfits, each using 5-liter flasks for distilling, connected by a single piece of 0.4-cm. (0.1875-inch) copper tubing. One flask operates at atmospheric pressure at temperatures of 176.67° to 315.56° C. (350° to 600° F.); the other, at 8-mm. vacuum or less and 148.89° to 287.78° C. (300° to 550° F.). Thermocouples, placed in the liquid in each still, were found much more satis-

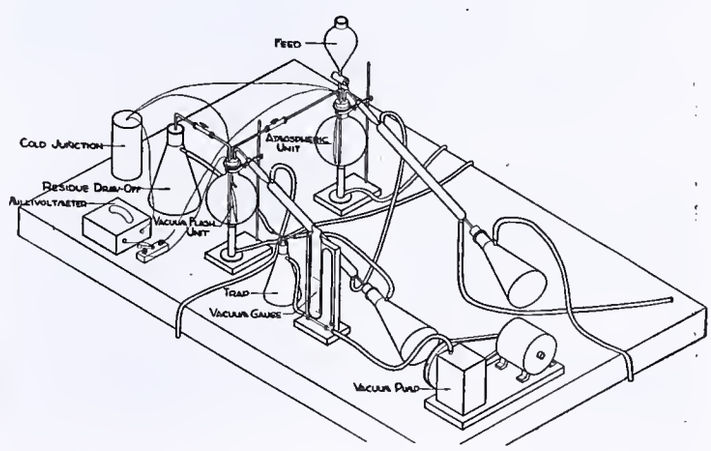

factory than thermometers, particularly at low distillation rates. Asbestos insulation of both stills was necessary.

The crude oil is fed to the atmospheric still, which serves to preheat the oils for vacuum flashing and removes the gasoline and water. When operation is started, about 1 liter (1 quart) of crude is charged to this still and gradually heated to 232.22° C. (450° F.). Crude is then added continuously, but slowly, through a separatory funnel to the hot charge. With this arrangement, no bumping or foaming occurs, and it is possible to maintain a higher rate of distillation.

The hot bottoms from the topping still are drawn into the vacuum still, being sprayed into it at a high velocity. When operated strictly as a flash unit, there is no difficulty with foaming and entrainment as in ordinary vacuum distillation. If flashing does not remove enough material, a small amount of heat can be applied, making the one flask serve as both a flash chamber and a distillation unit.

Although no attempt was made to obtain sharp cuts of the lighter materials, these could be secured by including fractionating columns in the setup. No difficulty has been experienced in running different crudes. The results were equally satisfactory upon East Texas, Smackover, Mid-continent, Pennsylvania, and California oils. By careful control, fractions of any gravity desired may be obtained. Table I shows the results of rerunning a Texas gas oil fraction to obtain experimental cracking stock, and the separation of a Texas lubricating distillate from heavy residuum.

Table I. Rerun of Fractions to Desired Gravity

	Texas Gas Oil Fraction			Texas Residue Fraction		
		Temp.	Absolute Pressure		Temp.	Absolute Pressure
	°A. P. I.	°F.	Mm.	°A. P. I.	°F.	Mm.
Charge	32.2	..	..	23.0	..	..
Atmospheric unit distillate	35.0	505	754	..	580	752
Vacuum unit distillate	31.1	310	7	25.2	485	6
Vacuum unit residue	28.8	..	..	20.0	..	..

The apparatus has been found useful for the vacuum distillation of lubricating distillate to lubricating oils, using the atmospheric still as a preheater for the flashing chamber, and in solvent-extraction work for removing and recovering solvents from the raffinate and extract. Here the first still was used to recover most of the solvent and the oil was then flashed into the second still to remove the last traces.

Literature Cited

(1) Podbielniak, W. J., Ind. Eng. Chem., Anal. Ed., 5, 135 (1933).
(2) Scheumann, W. W., and Stewart, J. F., *Refiner Natural Gasoline Mfr.*, 14, 276 (1935).

Received January 22, 1937. Contribution 226, Department of Chemistry, Kansas State College,

Vessels for the Storage of Gases and Liquids

JULIUS SENDROY, Jr., Hospital of The Rockefeller Institute for Medical Research, New York, N. Y.

The vessels described have been satisfactorily used for some time in this laboratory to serve several purposes in the gas analysis of gases and liquids. Requiring no expert glass blowing, they are easily constructed from readily available, inexpensive materials. These advantages, coupled with their sturdiness, flexibility, and convenience in manipulation, constitute an improvement over the accessories hitherto employed for the same purposes.

Storage of Air-Free Reagents over Mercury

It has been found that the reagents or solutions used for manometric analyses (*5*, *7*) can best be kept air-free over mercury. For such storage a modified Hempel pipet (*6*) and similar vessels have been used. Of late, there have been designed in other laboratories several different one-piece types of vessels, necessitating more or less expert glass blowing in their construction, which have had as their purpose avoidance of the ruinous contact of alkali or other reagents with the glass control stopcock. Such models have been described by Guest and Holmes (*2*) and by Holmes (*3*).

The author's design of a vessel suitable for the storage of reagents, particularly strongly alkaline ones, air-free or otherwise, and possessing the advantages outlined above, is shown in Figure 1, model 1.

A is a 236-cc. (8-ounce) "Hygeia" wide-mouthed nursing bottle into which the container parts are set, for convenience in handling or for setting on any flat surface. Into *A* are set *B*, a 30-cc. (or 60-cc.) separatory funnel, and *C*, a bulb of convenient capacity from 15 to 75 cc., with an external capillary tube ending, *a*, of 1.5-mm. internal diameter, bent as indicated, and a 4- to 5-mm. tube ending, *b*. The ends of *B* and *C* are connected at the bottom with a piece of thick capillary rubber tubing, *r*. The bulb and funnel are held in place in *A* by a two-hole No. 10 rubber stopper, *R*, shortened by 5 mm. at the bottom. The stopper is slit from the outside to each of the holes, so that *C* and *B* may be easily slipped into place after the connection at *r* has been made. The usual rubber adapter tip, *E*, is put on the end of the capillary, *a* If necessary for greater stability, the bottom of this and the other models may be weighted with either mercury or lead shot, *W*.

The reagent is made air-free by extraction in the manometric apparatus, and is transferred to the storage vessel under pressure, as described by Peters and Van Slyke (*4*, p. 235). If, for convenience, *B* is of only 30-cc. capacity, and more than this volume of reagent is to be stored in *C*, the mercury overflow from *B* may be caught by the insertion of the stopper and tube, *X*, into the neck of *B*. The rubber tube, *T*, may lead to a beaker or other container. By means of wiring around the indented rim of the bottle, *A*, this and the other models may be temporarily suspended at a convenient height, so that in any transfer of reagent or gas the operator need only use one hand to hold the capillary, *a*, firmly in the cup of the Van Slyke apparatus. At all times, when not actually delivering reagent, the vessel should stand with tip *E* immersed in a small beaker of mercury. This and models 2 and 3 are more easily taken apart, for cleaning or change of reagent, if the vessel is first emptied of most of the mercury it may contain.

These vessels may be used for any reagent not affected by mercury, and contact between reagent and control stopcock is avoided. Air-free *N* sodium hydroxide, observed in such a vessel over a period of 18 days, showed an increase in air content of only 4.1 mm. measured in the Van Slyke apparatus at the 0.5-cc. volume, for a 5-cc. sample of solution.

Storage of Blood Samples and Other Gas-Containing Solutions

Model 2, Figure 1, is the same as model 1, with a change in the form of the external capillary ending, *a*, to permit withdrawal of portions of solutions into a pipet, through the rubber connection, *o*. Tube a_1 (the ending of which is like that of *a*, model 1) in this model is removable, and is used only to transfer liquid to the vessel. This model may be used in place of the more cumbersome type of apparatus (*1*, Figure 3, p. 129) for the storage of gas-containing liquids, particularly blood as drawn. It is also useful for the storage of air-free reagents which must be delivered quantitatively, as in method *C* of Van Slyke and Sendroy (*8*, pp. 521, 525) for the determination of small amounts of nitrogen in oxygen or carbon dioxide.

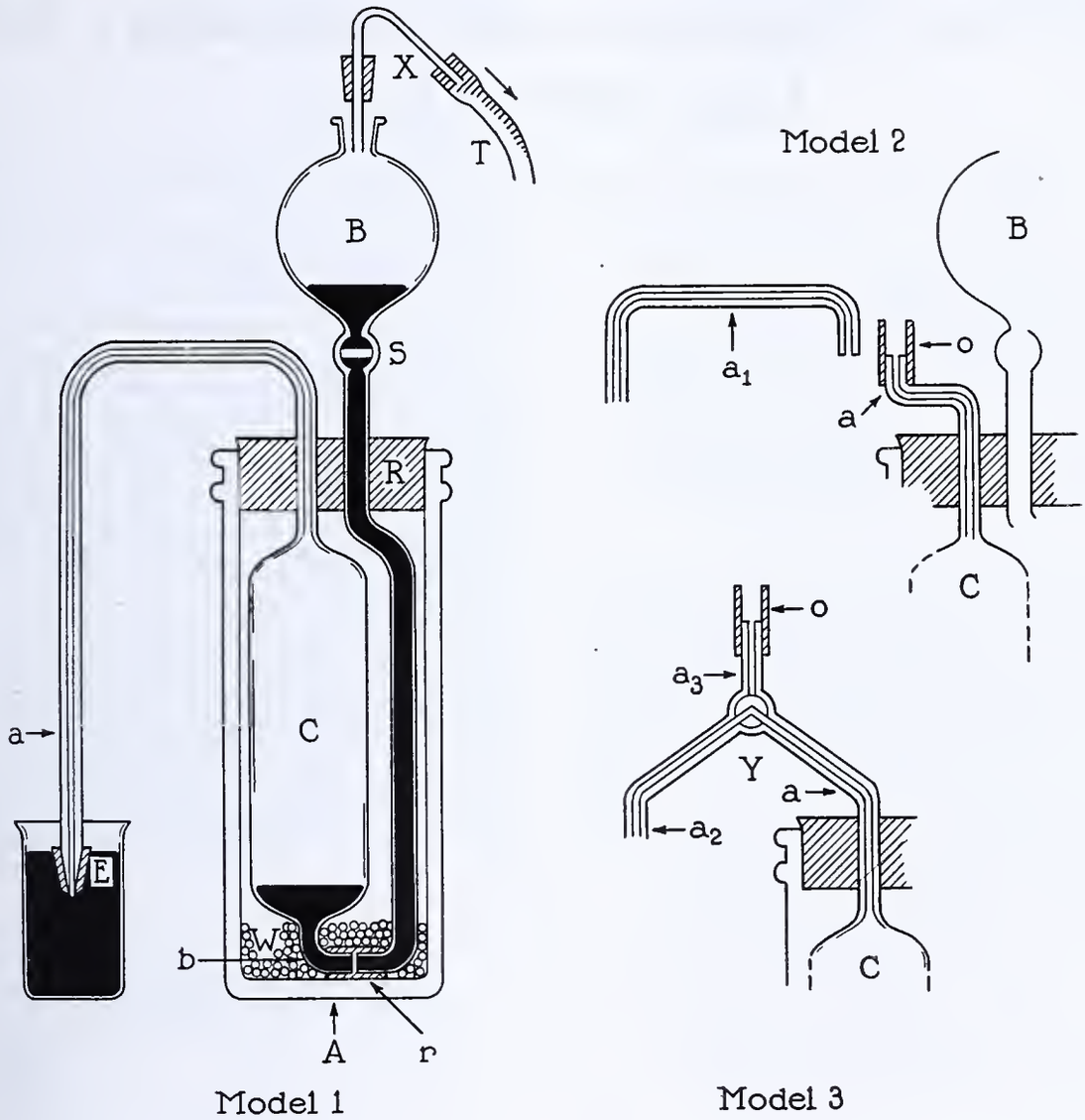

FIGURE 1. STORAGE VESSELS

Model 1, for storage of air-free reagents
Model 2, for storage of blood samples and other gas-containing solutions
Model 3, for storage of either gases or liquids

In this, and in the other models of this series, it may more often be necessary to transfer a solution into the vessel under negative pressure, as in the separation of serum from cells, a procedure effected in other systems by the lowering of a free leveling bulb corresponding to *B*. The same result may be attained by the use of the stopper and bent tube, *X*, inserted into the neck of *B*. With the thick-walled capillary rubber tubing, *T*, a connection is made to a 250-cc. suction flask to which suction may be applied. In case neither house nor water pump vacuum is available when the sample is transferred to *C*, as at the bedside, a small Becton and Dickinson "Potain" aspirating syringe, connected to the suction flask, has been found most satisfactory. A few strokes of the plunger are made, the syringe is laid down, and the operator is then free for the manipulations involved in the transfer of material to the container. Depending on the length of glass tubing, *X*, in the rubber stopper in the neck of *B*, the mercury in *B* may be kept at any convenient level, with overflow running into the suction flask, while the sample is taken into *C*. Later, when mercury is needed for displacement, it may be added to *B* through a small funnel. If *B* is large enough, there need be no tube *X* and vacuum may be applied to *B* directly.

Storage of Either Gases or Liquids

By another change in the external ending of bulb *C*, model 3 serves as a very convenient container to take the place of the usual types of gas-sampling tubes (*4*, Chapter III). The three-way, 120°, Y-form capillary stopcock, *Y*, provides for washing gas through from a_2 (the ending of which is like that of *a*, model 1) to a_3 or vice versa, and then storage of the sample in *C*, through limb *a*. (The 120° stopcock is not an item usually carried in stock by supply houses, but can readily be obtained on order. The usual three-way, 90°, T-form capillary stopcock will do as well, and has been satisfactorily used by the author. However, one must be very careful in its manipulation, so as to avoid the dangers of simultaneous double connections. When used for gas analysis only, any capillary three-way stopcock may be used in place of *X*.) Gas samples may be taken into the Haldane gas-analysis apparatus by a glass connection from limb a_3, or into the manometric apparatus by direct insertion of limb a_2 into the cup of the chamber. Obviously, this vessel may also be used as is model 2, for the storage of blood or other gas-containing liquids. If a dry anticoagulant be placed in *C*, blood may be drawn directly into this vessel by the attachment of a needle to a short length of rubber tubing connected to limb a_3. The initial flow is wasted through a_2, and then the sample is drawn in through *a*, under slight negative pressure.

Model 3 may also be used for the storage of nonalkaline, air-free reagents. For alkaline reagents, however, model 1 is much to be preferred.

Literature Cited

(1) Austin, J. H., Cullen, G. E., Hastings, A. B., McLean, F. C., Peters, J. P., and Van Slyke, D. D., *J. Biol. Chem.*, 54, 121 (1922).
(2) Guest, G. M., and Holmes, F. E., *Ibid.*, 110, 781 (1935).
(3) Holmes, F. E., *Ibid.*, 113, 411 (1936).
(4) Peters, J. P., and Van Slyke, D. D., "Quantitative Clinical Chemistry. Vol. II. Methods," Baltimore, Williams & Wilkins Co., 1932.
(5) Van Slyke, D. D., *J. Biol. Chem.*, 73, 121 (1927).
(6) Van Slyke, D. D., and Hiller, A., *Ibid.*, 78, 807 (1928).
(7) Van Slyke, D. D., and Neill, J. M., *Ibid.*, 61, 523 (1924).
(8) Van Slyke, D. D., and Sendroy, J., Jr., *Ibid.*, 95, 509 (1932).

RECEIVED February 2, 1937.

A 100-Plate Semiautomatic Laboratory Bubble-Cap Still of Glass

JOHANNES H. BRUUN AND W. B. MASON FAULCONER, Sun Oil Company Research Laboratory, Norwood, Pa.

The still described in this paper has a separating power equivalent to about 70 to 72 theoretical plates. Since the height of the fractionating column is only about 2 meters (6.5 feet), the new still can be placed in any laboratory of average or even below average height. At low rates of distillation the still is practically self-operating.

IN AN ATTEMPT made several years ago to increase the separating power of a rectifying still, an elevator shaft at the National Bureau of Standards was used for the construction of a 11.0-meter (36.1-foot) packed laboratory glass column (*5*). As a result of subsequent attempts along these lines, the over-all height of laboratory columns has been extended to 15.85 meters (52 feet, *7*). While the degree of separation obtained in these columns is very high, the erection of such columns will be possible only in laboratories where it is possible to extend the columns up through several floors.

With these facts in mind a new laboratory bubble-cap plate was recently developed by one of the authors (*4*). A still has now been constructed containing 100 plates of the new type, and designed so that the entire still may easily be placed in a laboratory of average or even below average height. In the present paper a complete description is given of such a still, as well as of its operation and efficiency.

Description of Still

An assembly drawing of the 100-plate bubble-cap still is given in Figure 1.

The column, which is made in 20-mm. sections, has a total holdup of about 70 ml. when it is in normal operation. The 100-plate column described in this paper was made by the Otto R. Greiner Company, 55 Plane St., Newark, N. J. The turntable and electric timer were made by the Automatic Temperature Control Company, Inc., 34 East Logan St., Philadelphia, Pa.

The automatic sample-taking device consists of a circular turntable with twelve holes for sample bottles and an electric timer, by means of which cuts can be made at any desired time interval from 10 seconds to 2 hours. The receiver is water-cooled and provided with an intermittent siphon, such as that of a Soxhlet apparatus. The reflux regulator is identical to that reported in an earlier paper (*3*).

The heating jacket, which is of a greatly improved design, is made of sheet transite with a glass front, so as to provide complete visibility of the column and of the four thermometers which are fastened to the column. The entire jacket is made in a single piece, with a cross section as shown in Figure 2. The heating coils are placed inside the jacket in order to provide immediate response to temperature adjustments of the column. In order to eliminate any effects of wind currents commonly encountered when windows or doors are opened in the laboratory, the transite jacket is insulated on three sides with asbestos paper and with felt pad.

A strong light placed outside the jacket near the top of the column will provide satisfactory illumination at night, although indirect lighting effects are to be preferred. This could be accomplished by building a recess into one side of the transite jacket and placing a neon tube along the entire length of the jacket.

Operation of Still

The material to be distilled is introduced through the filling tube, after which full heat is applied to the still pot until boiling begins. At this point the heat on the still pot is decreased and the heat on the column is turned on. The column jacket temperatures are maintained preferably between 10° and 20° below the temperature of the vapor in the beginning period, so as to allow liquid to condense on the plates and thus start the operation of the column from the bottom up. As soon as all the plates have commenced to function, adiabatic conditions may be established around the column, and the desired rate of boiling obtained by adjusting the heat on the still pot.

The time required to start up a 100-plate column in the above manner is about 20 to 30 minutes from the time of boiling in the still pot. If any section of the column should have a tendency to flood, the still-pot switch should be pulled off for a few moments until the column resumes its normal operation.

For most distillations it is advisable to set the reflux regulator for total reflux and to allow the column to operate in this manner for from 2 to 6 hours in order to ensure equilibrium on all of the plates. By adjusting the micrometer screw on the reflux regulator, the distillate is then allowed to pass over into the receiver at the desired rate.

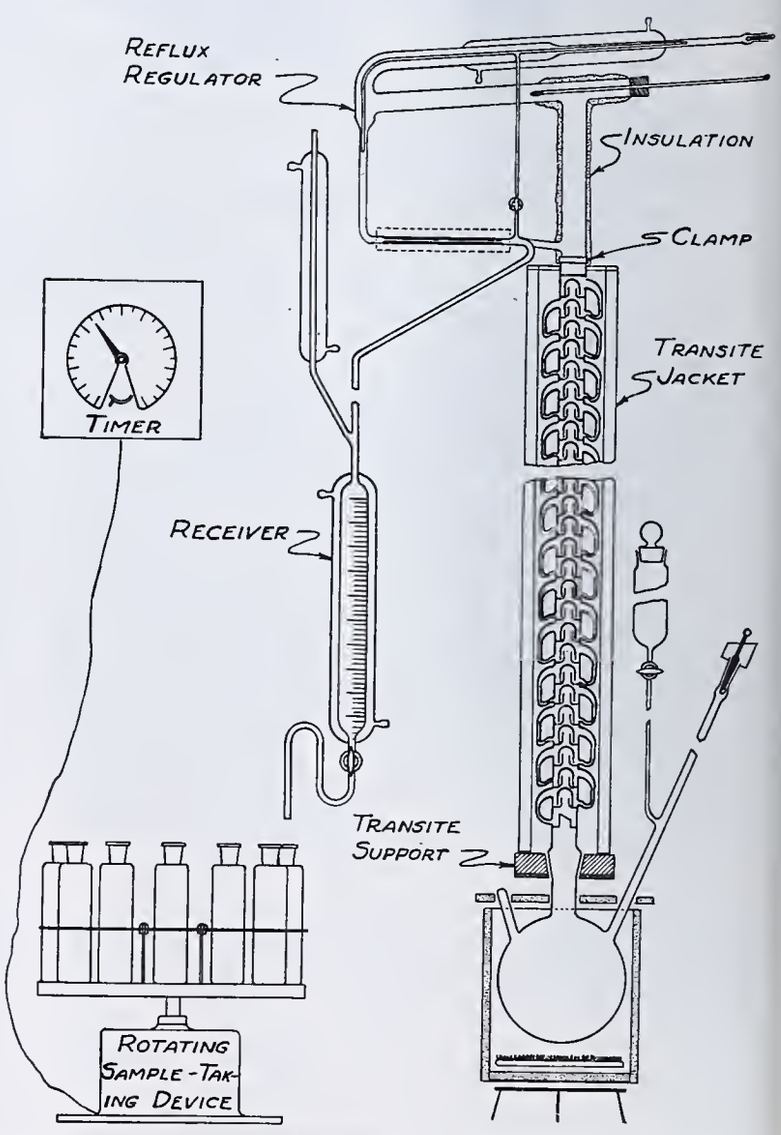

FIGURE 1. ASSEMBLY OF 100-PLATE STILL

By using the automatic sample-taking device, the still, when once started and properly adjusted, requires, practically speaking, no attention whatsoever, and it has been the practice at this laboratory to leave the still running at low rates of boiling (10 ml. per minute at the top of the column and 0.1 to 0.5 ml. per minute collecting in the receiver) during nights as well as Sundays. The low rates of distillation employed under such circumstances are more than compensated for by the 168 hours per week of actual distillation time available.

If for any reason, such as the approach of a week end, a flooding of the column, or other interruption, it should become necessary to shut down an uncompleted distillation, the still has the advantage of being nonsiphoning (*2*)—that is, the already fractionated portions of the liquid will remain on their respective plates in the column. When the still is to be restarted, the operator has the advantage not only of having liquid on every plate, but also of having the previously established equilibrium between the compositions of the liquids on the various plates unchanged. This feature alone represents a time saving of from 2 to 6 hours at every shutdown.

Efficiency of Still

The efficiency curves given in Figures 3 and 4 indicate that even compounds boiling only a few degrees apart, such as benzene and ethylene chloride, can be separated in the 100-plate still. In these "efficiency runs" the columns were operated under practically total reflux until equilibrium had been established on the plates. The distillations were then started slowly and the rates as well as the reflux ratios were gradually adjusted to the values given in the figures. The results shown in Figure 3 were obtained by manual operation of the still, while the curve shown in Figure 4 is a result of a semiautomatic distillation where manual control was limited to an inspection every 4 to 8 hours.

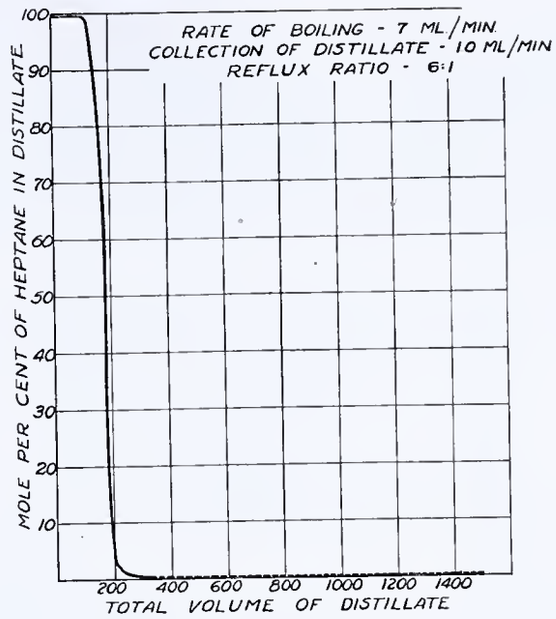

FIGURE 3. EFFICIENCY CURVE OF 100-PLATE STILL

Charge, 1500 ml. of a test mixture containing 10 mole per cent of *n*-heptane (boiling point = 98.4° C.) and 90 mole per cent of toluene (boiling point = 110° C.)

The 100-plate fractionating column was furthermore tested according to the procedure used by Fenske, Tongberg, and Quiggle (*6*) and by using the vapor-pressure relationships published by Beatty and Calingaert (*1*). The results of these efficiency runs are given in Table I.

While the results indicate that the number of theoretical plates in the new column is between 70.6 and 84.2, the experimental errors tend to increase whenever the concentration of *n*-heptane in the still pot becomes small (0.5 mole per cent). For this reason it is believed that 70 to 72 theoretical plates would be a more conservative value for the separating power of the column. This corresponds to a height of the equivalent theoretical plate of about 2.8 cm., as compared with the somewhat lower value of 2.0 cm. which was obtained when a 5-plate column of identical design was tested with other mixtures (*4*).

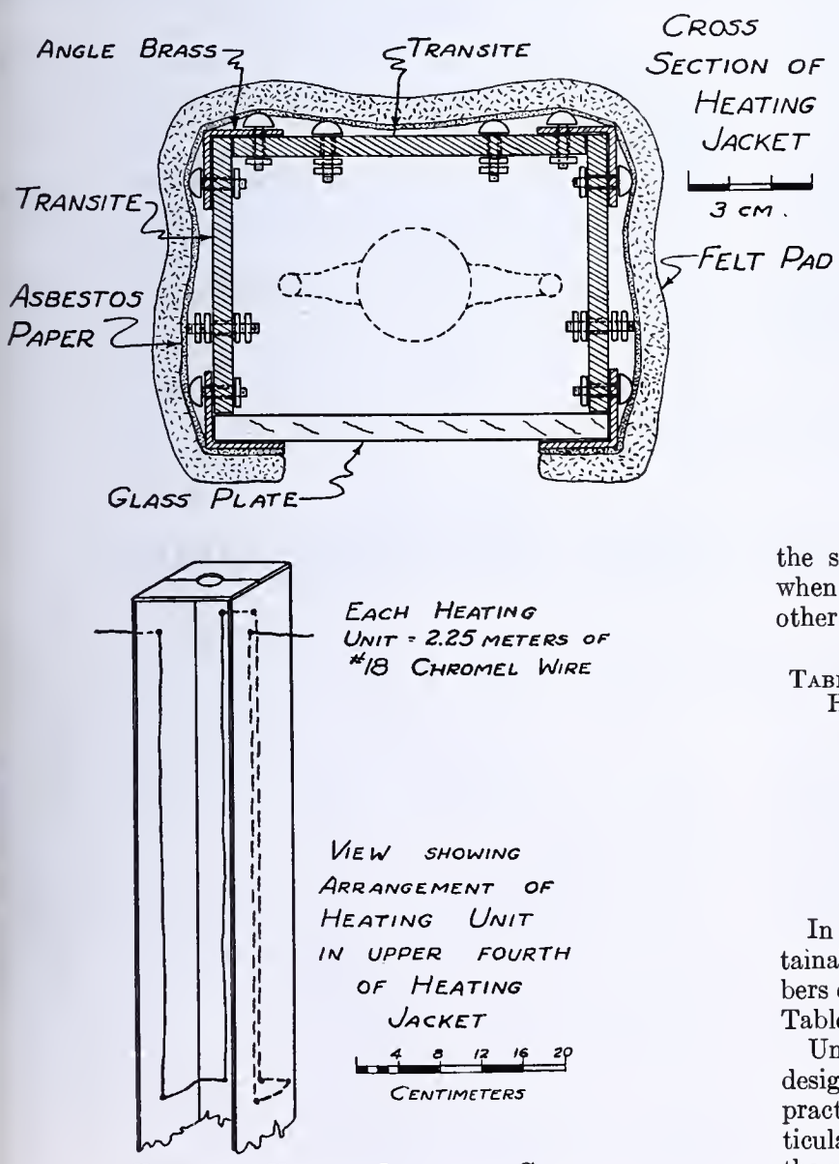

FIGURE 2. HEATING JACKET FOR COLUMN

TABLE I. EFFICIENCY TEST RUNS USING MIXTURES OF *n*-HEPTANE AND METHYLCYCLOHEXANE (TOTAL REFLUX)

Rate of Boiling at Top of Column	Mole Per Cent of *n*-Heptane		Number of Theoretical Plates
	Still pot	Top of column	
Ml./min.			
8	0.5	54.1	84.2
10	2.5	76.7	72.6
5	5.8	87.2	70.6

In order to give a more definite idea of the separation obtainable with laboratory columns containing different numbers of plates, a few experimental distillations are included in Table II.

Unfortunately, the three columns used were not of identical design, but at the rates employed they had been found to have practically the same plate efficiencies (*4*). It should be particularly noted that with a column containing only 26 plates, the separations to be expected are such that even compounds

boiling 12° apart cannot be completely separated. Consequently, the need of columns containing a larger number of plates cannot be emphasized too strongly. Generally speaking, efficient separations of complex mixtures in stills containing less than 30 plates is almost hopeless. Similarly, packed columns with heights below 1.5 meters (5 feet) should be used only for separation of a few of the very simplest known binary mixtures.

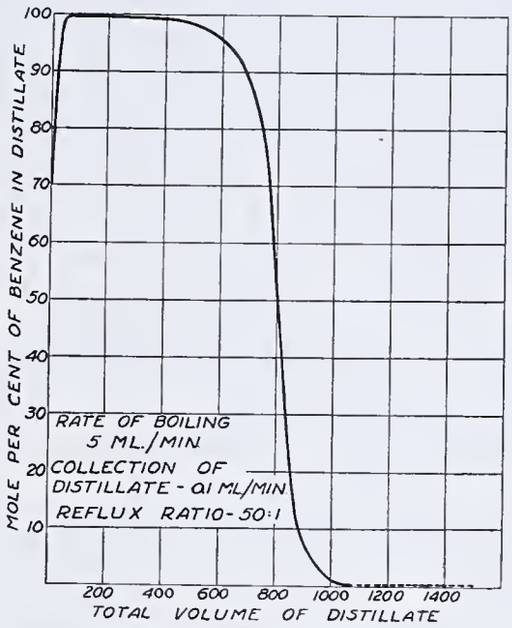

FIGURE 4. EFFICIENCY CURVE OF 100-PLATE STILL

Charge, 1500 ml. of a test mixture containing 50 mole per cent of benzene (boiling point = 80.2° C.) and 50 mole per cent of ethylene chloride (boiling point = 83.7° C.)

For laboratories dealing with more extensive distillation problems, an installation consisting of two stills is to be recommended. The material to be fractionated could then first be subjected to a fast distillation into narrow cuts by means of a 50- to 60-plate column in 40-mm. sections (for design see Figure 2, *4*). This column is designed for very much greater rates of distillation and is even easier to operate than the one used in the present paper. The subsequent redistillation of the cuts thus obtained could be done at a lower rate of distillation in a 100- to 130-plate column consisting of 20-mm. sections, such as those used in the column described in the present paper (for design of the 20-mm. plate sections, see Figure 1, *4*).

The maximum permissible vapor velocity for the 100-plate column described in this paper is 31.3 cm. per second (1 foot per second), which corresponds to a rate of boiling of about 30 ml. of benzene per minute.

TABLE II. DISTILLATION OF BINARY MIXTURES IN COLUMNS CONTAINING 100, 52, AND 26 PLATES

Test mixture	Conditions of Distillation: Rate of boiling	Rate of collection distillate	Reflux ratio	Mole Per Cent of Lower-Boiling Constituent in Distillate: 100-plate column[a]	52-plate column[b]	26-plate column[c]
	Ml./min.	*Ml./min.*				
50:50 mole per cent, benzene – ethylene chloride (difference in boiling points = 3.5° C.)	2	0.1	20:1	99.9	93	80
10:90 mole per cent, *n*-heptane-toluene (difference in boiling points = 12° C.)	7	0.1	7:1 to 10:1	99.9	99	93

[a] Figure 1, *4*. [b] Figure 2, *4*. [c] Figure 5, *5*.

Literature Cited

(1) Beatty, H. A., and Calingaert, G., IND. ENG. CHEM., 26, 504 (1934).
(2) Bruun, J. H., *Ibid.*, Anal. Ed., 1, 212 (1929).
(3) *Ibid.*, 7, 359 (1935).
(4) *Ibid.*, 8, 224 (1936).
(5) Bruun, J. H., and Schicktanz, S. T., *Bur. Standards J. Research*, 7, 851 (1931).
(6) Fenske, M. R., Tongberg, C. O., and Quiggle, D., IND. ENG. CHEM., 26, 1169 (1934).
(7) Fenske, M. R., Tongberg, C. O., Quiggle, D., and Cryder, D. S., *Ibid.*, 28, 644 (1936).

RECEIVED November 23, 1936.

Apparatus for Crude-Fiber Determination

CHAS. E. WEAKLEY, JR., West Virginia Agricultural Experiment Station, Morgantown, W. Va., AND T. B. LEITH, Department of Agriculture, Charleston, W. Va.

IN THE determination of crude fiber in feeds and other plant materials, as carried out in different laboratories, a variety of manipulations and apparatus assemblies is in use, designed to conform with the official method of the Association of Official Agricultural Chemists in general principle, but differing widely in ease of manipulation, time-consumption, and uniformity of the results obtained. It has justified its name through the years by remaining a crude determination, with little concerted attempt to improve and standardize it in spite of its importance in many fields of experimental and regulatory work. The considerable variety in the character of materials to which this apparatus in question must be applied renders the time and accuracy of the difficult filtrations and transfers involved peculiarly subject to the variations of individual technic, in a determination frequently delegated to an inexperienced chemist. The adoption of uniform fiber apparatus and technic will depend upon the development of a simple, convenient, and efficient setup, which will remove as much as possible of the crudeness from the procedure.

An improved apparatus and technic, which simplify the whole operation, have been developed in this laboratory over a period of several years. Figure 1 shows a general view of this apparatus, which looks rather complicated but can be built from ordinary laboratory equipment; it will be found substantial, easily manipulated, a time-saver, and well adapted for consistent and reproducible results. The samples are not removed from the Erlenmeyer flasks until they are filtered off into the Gooch crucibles. All digestions and washings are completed without previous transfer.

Procedure

The fat-extracted samples are transferred to 1-liter Pyrex Erlenmeyer flasks, which are placed in a row on the table in front of the apparatus. A small amount of fine ignited asbestos is added as an aid to filtration. The 1.25 per cent sulfuric acid, which has been heated to boiling in a 3-liter Pyrex Florence flask, is drawn into the measuring pipets through the distributor by gravity (the Florence flask being placed on the shelf above the pipets), hastened by applying suction to the series of T-tubes connecting the upper ends of the pipets.

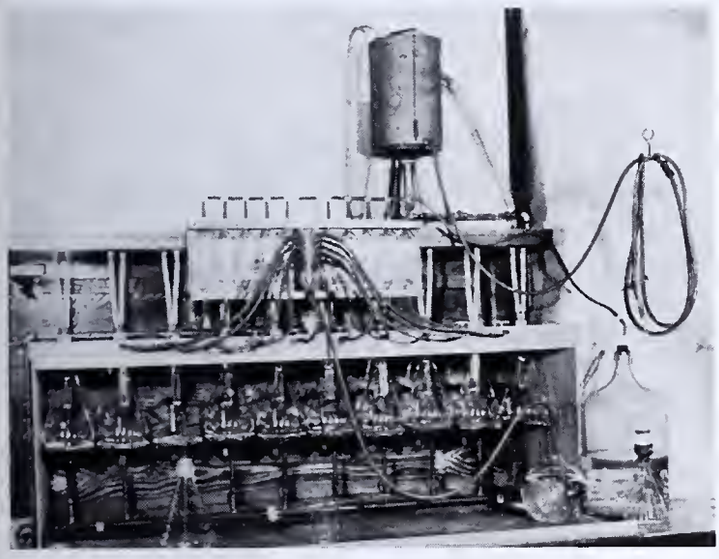

Figure 1. Crude-Fiber Apparatus

The distributor (made of Pyrex glass, at moderate cost, by E. Machlett & Son, New York, N. Y.) which is shown in detail in Figure 2 is made with the side arms in two rows, the rows being at right angles to one another. Each side arm has an upward slant of 45 degrees from the central tube which is bent forward (at the lower end) for a rubber-tube connection. This permits the excess liquids to drain out of the system after each individual treatment is completed. Since different lengths of rubber tubing are required to connect the different pipets with the distributor, it is necessary to calibrate each line separately by a mark on the pipet when the apparatus is set up. When the acid reaches the proper level in each pipet, the glass stopcock (3-mm. bore) in that particular line is closed off. After the whole system has been filled to the proper level, the suction is shut off and the Florence flask moved to the table. All rubber tubes from the pipets are disconnected from the distributor (connection having been made by short pieces of rubber tubing and pieces of glass tubing drawn down to form nozzles with 3-mm. openings), and the contents of the pipets are emptied into the Erlenmeyers, using the nozzles to wash down the sides of the flasks. As each line is disconnected, the acid remaining in the corresponding distributor arm returns to the Florence flask. After the acid has been added to all the flasks (the procedure requiring about 1 minute), they are placed over the flames on 13-cm. iron rings covered with nichrome wire gauze, the iron rings being attached to supports connected to flanges which are screwed to the wall. The solutions are brought to boiling quickly, after which the flames are adjusted with the valve in the main line to keep them boiling gently.

The volume of the liquid is kept constant by 2.5 × 20 cm. test-tube condensers which extend 15 cm. into the flasks. The upper 7 cm. of the test tubes are covered with heavy-walled rubber tubing to fill up loosely the necks of the flasks and act as a cushion when the flasks are shaken. The glass inlets and outlets of these condensers have flexible connection with 6-mm. copper tubes through 20-cm. lengths of rubber tubing. These copper tubes are held rigidly in place by a grooved strip, 5 cm. wide, screwed to the bottom side of the front edge of the shelf. One stream of water cools five condensers and is connected with the water supply by a needle valve for ease of adjustment. This adjustment is made by observing the discharge at the end of the copper overflow pipe.

After boiling gently for 30 minutes, the flasks are removed from the flames and placed on the table in a position slightly tilted by means of a beveled wooden strip in front of the apparatus. Inverted filter tubes (made from straight thistle tubes selected to go through the necks of the Erlenmeyers and covered with linen cloth tied on with thread, turned back, and retied with copper wire) are then placed in the Erlenmeyer flasks, the filter tubes having been connected previously to the system through the nozzles described above. Suction is applied, and the filtrate is drawn off quickly and completely. The acid-extracted residue remaining in the flask is washed free from acid with boiling water, each portion being removed to relative dryness by suction through the inverted filter tube. As soon as the last wash water is removed from each flask, the Erlenmeyer and inverted filter are held in a horizontal position above the level of the stopcock, so that the liquid in the inverted filter and rubber tubing will be drawn past the stopcock, which is then closed.

As the filtrations are finished, the nozzles are disconnected from the inverted filters and again connected to the distributor. The suction is then disconnected from the line to the T-tubes above the pipets and connected to the line leading to the bottom of the distributor which formerly was immersed in the acid. The glass stopcocks are opened, air enters the T-tubes, and the system is emptied of the acid wash water. If the washing operation is thorough, no additional rinsing of the system is necessary. The suction is now disconnected from the tube to the bottom of the distributor and connected to the T-tube line, and up to the point of filtration the same procedure is followed for the 1.25 per cent sodium hydroxide solution as for the acid solution, washing the residue from the inverted filters by use of the nozzles as the alkali is delivered from the pipets. After boiling gently for 30 minutes in the alkali solution, the flasks are removed from the flames, the contents are filtered through Gooch crucibles with asbestos pads, and the residues are washed with boiling water until free from alkali. The crucibles are now ready for drying and the determination of loss on ignition.

Table I. Collaborative Results

West Virginia Results: Triplicate determinations	Average	Average Results of 53 Laboratories
%	%	%
5.76	5.78	5.84
5.80		
5.79		
6.96	6.99	7.11
7.04		
6.96		
9.82	9.91	9.61
10.01		
9.91		
17.34	17.27	17.02
17.24		
17.24		
29.44	29.57	29.57
29.61		
29.65		
	Av. 13.91	13.83

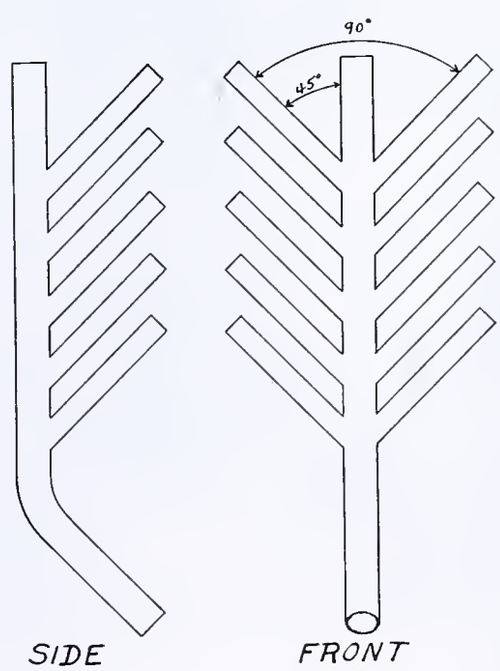

Figure 2. Distributor

As soon as the sodium hydroxide digestion is started, a 2-liter vessel of distilled water is connected to the line from the bottom of the distributor, suction is applied to the T-tube line, and the whole distributing system is rinsed and drained by suction from below. This removes the caustic soda and prevents freezing of the glass stopcocks. The inverted filters are also washed thoroughly and soaked in several changes of water. A 12-liter bottle two-fifths full of water is placed in the line to the suction pump to receive the hot acid filtrate and washings, and suction is applied through this reservoir at all times.

An 8-liter tinned copper tank placed over a flame on the shelf above the apparatus supplies hot distilled water by gravity for all washing purposes. This vessel is filled from the storage tank through a block-tin pipe, by either gravity or pressure.

Ordinary 9-mm. glass funnels with cut-off stems are fitted to the 25-cc. Gooch crucibles by means of No. 7 rubber stoppers to aid in the transfer of material from the Erlenmeyer flasks. By this means the hot extract is removed immediately with two quick pourings.

Table I shows a comparison of the results obtained with this apparatus and the average of the results from 53 feed laboratories throughout the country on check samples sent out by the Association of Feed Control Officials. These samples show a wide variation in fiber content.

Received November 25, 1936. Published with the approval of the Director of the West Virginia Agricultural Experiment Station as Scientific Paper No. 178.

Gas-Tight Laboratory Stirring Device for Pasty Materials

A. H. MAUDE, Hooker Electrochemical Company, Niagara Falls, N. Y.

THE apparatus described below was developed for the purpose of reacting and distilling pasty materials under vacuum. Where materials are of such consistency that ordinary stirring devices fail to give effective mixing, the only alternative types of apparatus known to the author are the kneading machine and the ball mill. These are not available for small charges, of the order of 100 grams, and they have other disadvantages, such as the difficulty of determining changes in weight and of maintaining perfectly vacuum-tight glands, time consumed in opening and closing for charging or discharging, and relatively high cost.

A method of mixing thick masses by affixing wire loops to a stirring rod was described by Hershberg (*1*), and a method of making a glandless stirrer for a flask was described by Powell (*2*). The apparatus now described combines these two ideas and develops them into a form of wide utility.

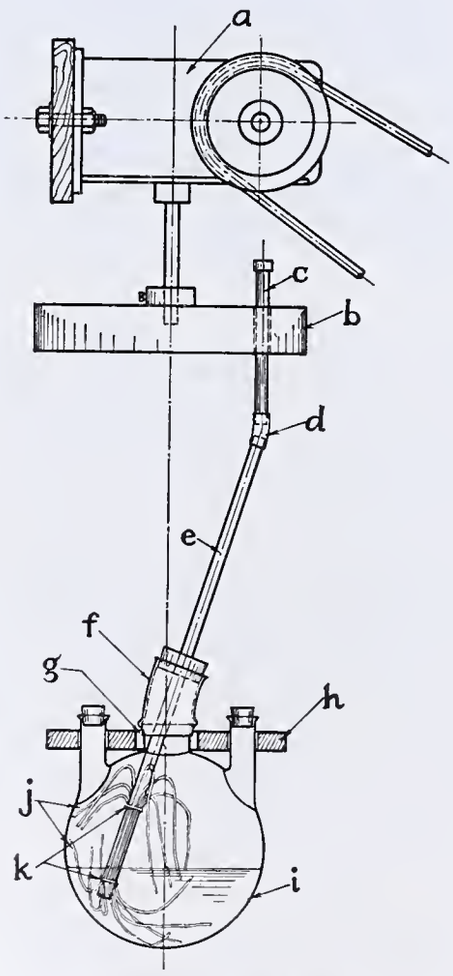

FIGURE 1. APPARATUS

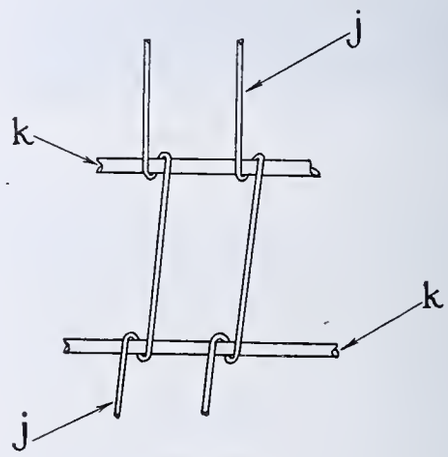

FIGURE 2

The apparatus is shown in Figure 1. A 500-cc. 3-necked Pyrex distilling flask, *i*, was used. The middle neck, *g*, was cut down to about 1.25 cm. (0.5 inch) in length and slightly flared. A stirring rod, *e*, was introduced through a stopper attached to the flask by a 5-cm. (2-inch) length of thick-walled 2.5-cm. (1-inch) inside diameter rubber tubing, *f*, wired firmly in place. The glass stirring rod was 0.9 cm. (0.375 inch) in diameter, very slightly drawn out at the two points where the wires were bound on. After several trials it was found that steel music wire 0.6 mm. (0.024 inch) in diameter (music wire, gage 10) or phosphor bronze wire of about double this thickness was of a suitable springiness and stiffness to stir any paste encountered, yet not to endanger the glass flask. Twenty of these wires, *j*, were attached by twisting them around soft iron wires, *k*, as shown in Figure 2. The iron wires were then twisted around the constricted portions of the glass stirring rod. The steel wires were spread out and cut off to suitable lengths to scrape against the walls of the flask.

The stirrer was driven at 30 revolutions per minute, by a speed-reducing gear, *a*, which was furnished with a disk wheel, *b*, drilled for the floating pin, *c*. Several drill holes were provided to permit adjustment of the width of sweep of the stirrer. As it is necessary to mount the flask very firmly, it was clamped by suitably shaped wooden pieces, *h*, across its three necks. The stirring rod was attached by a heavy rubber tube, *d*, wired in place. All connections to the flask may be cemented with shellac or collodion.

Use of this device reduces to a fine powder a paste which would become a solid hard lump if distilled without stirring.

Literature Cited

(1) Hershberg, IND. ENG. CHEM., Anal. Ed., 8, 313 (1936).
(2) Powell, *Ibid.*, 8, 488 (1936).

Received January 13, 1937.

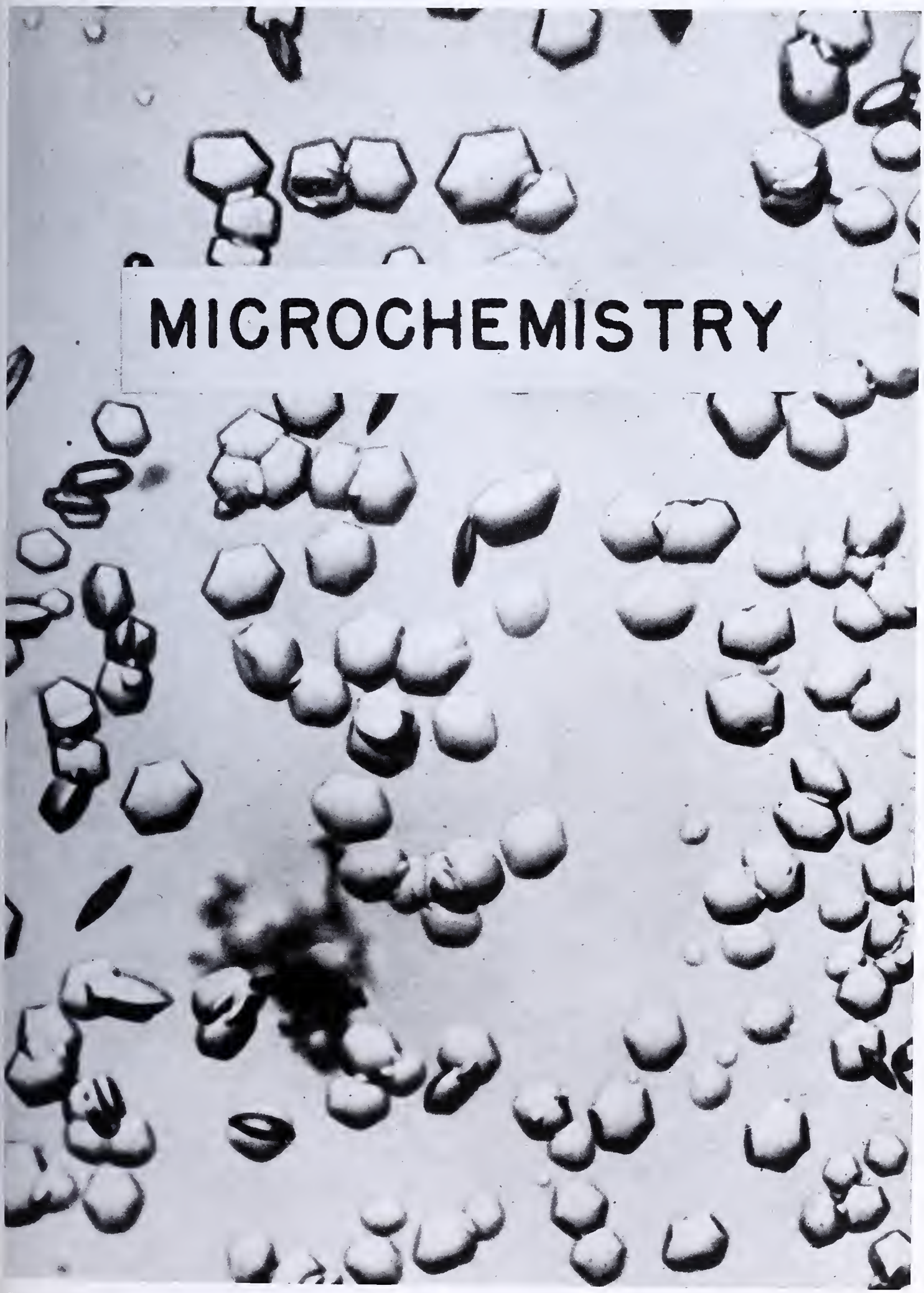

Courtesy, A. A. Benedetti-Pichler

Bismuth Cobalticyanide

Microanalysis of Nitrogen in Certain Pyrimidines by the Dumas Method

DOUGLASS F. HAYMAN AND SOL ADLER, Merck & Co., Inc., Rahway, N. J.

THE micro-Dumas method of Pregl (*3*) has an enviable reputation for producing accurate results on a variety of substances. Properly handled, it was considered an accurate method for any organic nitrogen-containing compound.

This method was used in this laboratory on a wide range of compounds without any known discrepancy until a certain series of pyrimidines of known purity failed to give the required amount of nitrogen. The nitrogen values obtained were from 0.4 to 2.0 per cent below theory and were reproducible under uniform treatment of the sample. The carbon and hydrogen values for these compounds agreed with the theoretical values within the limits of experimental error.

Several papers have appeared recently in the literature in which references were made to the fact that there were certain types of compounds which could not be analyzed properly by the Dumas method. The nitrogen values obtained were low (*1, 2, 4, 5*).

The first step in studying this problem was to make the combustions in a quartz tube, employing the hottest flame obtainable from a Tirrill burner. Utilizing this high temperature, the results obtained for nitrogen present were higher but still were below theory. The addition of potassium chlorate to the samples, as advocated by Pregl, together with high heat showed no improvement over the method of burning at a high temperature. Potassium dichromate was tried but with no better results. It was thought that the combustion of this particular type of compound must be abnormal or that the combustion was incomplete.

Mercuric acetate, a slow-burning compound with a high decomposition point, was mixed with the sample to furnish the normal decomposition products over a longer period of time. The results obtained with this compound were very satisfactory. There was an appreciable amount of metallic mercury produced. Because it appeared that the operator might be harmfully affected by the mercury vapor, especially when burning out the temporary filling between analyses, etc., a trial was made with copper acetate, which also gave excellent results. The metallic copper remaining from the combustion of the copper acetate could not be harmful either to the operator or to the analysis.

A finely powdered sample weighing 1.5 to 3.0 mg. was transferred from the weighing bottle to the mixing bottle, a test tube 10 × 75 mm. About five times as much copper acetate was added to the sample, and the whole was thoroughly mixed by rotating the tube. This mixture was then covered with finely powdered copper oxide to a height of 30 mm., and the mixing tube was closed with a tightly fitting cork. In mixing with the copper oxide, the tube was never shaken, but was rotated at an angle of 15° above the horizontal so that some copper oxide was introduced into the original mixture of unknown and copper acetate. This mixture was transferred to the combustion tube.

The first rinsing of the mixing bottle was made with about 6 mg. of copper acetate mixed with the usual amount of copper oxide powder. The second rinsing was made with copper oxide powder alone. The combustion was carried out by using a very hot movable flame, which was brought towards the sample very cautiously, as the large concentration of combustible material might result in too rapid combustion.

Typical analyses before and after using the special method are given in Table I.

Blank runs were made with the copper acetate, but only micro bubbles were produced. Compounds previously analyzed by the regular Pregl method gave identical results using the special method, showing that it was sound.

It has been found difficult to explain the cause of failure of the Dumas method on these pyrimidines. There was considerable evidence that some nitrogenous compound was left behind, a fact that pointed to incomplete combustion as the most likely source of error. It was a common experience for a very low result to be followed by a higher one, occasionally higher than the theoretical. As a rule, the results on known compounds have run high, following a number of failures with the difficult types. The tube as well as the temporary copper oxide filling required a vigorous and lengthy burning before accurate results on known compounds were again obtained.

TABLE I. TYPICAL ANALYSES

Compound	Regular Micro-Dumas, Quartz Tube and High Heat	Special Method	Theory
2-Thio-4-oxy-6-amino-pyrimidine	26.22	29.53	29.44
	28.28	29.59	
	27.61		
4-Ethoxymethyl-5-methyl 6-oxypyrimidine	16.04	16.86	16.65
	16.19	16.92	
Vitamin B_1	16.25	16.53	16.62
	16.12	16.69	
	16.07[a]		
	16.00[a]		
	15.83[a]		
2-4-Dimethoxy-5-bromo-pyrimidine[b]	12.36	12.80	12.79
	11.74	12.89	
	10.71[c]		
	11.33[c]		
Cytosine[b]	36.57	37.70	37.84
	32.13[c]	37.74	
	35.05[c]		

[a] Results taken from a paper by Wintersteiner, Williams, and Ruehle (*5*).
[b] Supplied through the courtesy of G. E. Hilbert, Bureau of Chemistry and Soils, U. S. Department of Agriculture.
[c] Results taken from a paper by Milner and Sherman (*2*).

After the copper acetate had been used for some time the results were fairly reasonable if no more copper acetate was used, but the tendency still was for the results to be low so that it did not seem practical to dispense with the new method. Starting with a new combustion tube and an entirely new filling, results will always be low, as shown in the table.

It was also found that if the sample was weighed in a copper boat and burned in the combustion tube in contact with the metallic copper, the results would be higher than normal but erratic. This method was not practical for the analysis of such compounds. It would seem that the copper might have some catalytic property that aids the normal combustion.

It is difficult to make any generalizations as to what type of pyrimidine may give a low nitrogen by the regular Dumas method. Countless pyrimidines have been analyzed successfully, as a study of the literature will show. As more compounds are found which prove hard to analyze, some satisfactory correlation may be found.

Literature Cited

(1) Grewe, R., *Z. physiol. Chem.*, 242, 89 (1936).
(2) Milner, R. T., and Sherman, M. S., IND. ENG. CHEM., Anal. Ed., 8, 331 (1936).
(3) Pregl, F., Fyleman, E., "Quantitative Organic Microanalysis," 2nd ed., Philadelphia, P. Blakiston's Son & Co., 1930.
(4) Windaus, A., Tschesche, R., and Ruhkopf, H., *Wochschr. Ges. Wiss. Göttingen III Chemie*, No. 22, 342 (1932).
(5) Wintersteiner, O., Williams, R. R., and Ruehle, A. E., *J. Am. Chem. Soc.*, 57, 517 (1935).

RECEIVED January 13, 1937.

The Determination of Sulfate Ion

The Microvolumetric Chromate Method

GEORGE G. MANOV AND PAUL L. KIRK, University of California Medical School, Berkeley, Calif.

The microvolumetric chromate method for sulfates has been investigated by a separate study of the effect of variables on each step of the procedure.

It has been found that the usual chromate methods contain several errors, notably the co-precipitation of chromate ion with barium sulfate, and the oxygen error in the iodometric determination of dichromate. Procedures have been developed to minimize these errors and to eliminate them completely in some cases.

MICROVOLUMETRIC methods for sulfate determination have been based on the titration with standard barium salts using rhodizonic acid (*17*) or tetrahydroxyquinone (*15*, *16*) as indicator, and on the chromate method, the original form of which is due to Andrews (*2*).

Rhodizonic acid has been found by Schroeder (*15*) and others (*8*, *9*, *14*) to be undependable as an indicator, and tetrahydroxyquinone cannot be applied to solutions much below 0.1 *N*, as has been found in this laboratory (unpublished data) and elsewhere (*1*, *9*).

The chromate method has been studied by Bruhns (*5*), Foster (*7*), Gibson and Caulfield (*9*), Kolthoff (*11*), Morgulis and Hemphill (*13*), and others, and has been widely used in various forms as a micromethod.

In extended research and class use of micromethods for chromate, constant irregularities have been observed. These could not be definitely traced, because of the large number of possible errors. Results could often be reproduced to within ±0.3 per cent, but the absolute error was usually −5 per cent or more. There are numerous possible errors in the theory of most of these methods—e. g., co-precipitation of chromate ion with the barium sulfate and barium chromate, oxygen error in the determination of the soluble chromate, reduction of the dichromate by chloride ion in acid solution, and precipitation of other barium salts in alkaline solution—e. g., carbonate, etc. Thus, the published results may have involved counterbalancing of unknown and perhaps large errors.

Micromethods were used in this study in order to make more easily discernible the possible magnitude of errors inherent in the common volumetric chromate methods for sulfate, with a view to their elimination or control.

Bray and Miller (*3*) found that when sodium thiosulfate solutions were standardized iodometrically against potassium dichromate, the order of addition of reagents played an important part. If the iodide was added to the acidified dichromate, the liberated iodine corresponded very closely to the theoretical. If, however, the dichromate was added to the acidified iodide, an excess of about 0.4 per cent of iodine was liberated, probably through oxidation of the iodide ion by dissolved oxygen of the air. Bray and Ramsey (*4*) found the same effect in the reduction of vanadic acid by iodide and, by systematic investigation, were able to magnify the errors up to 1200 per cent in the initial stages of the reaction.

Experimental

All solutions are made up from freshly boiled distilled water and stored under an atmosphere of nitrogen (99.5 per cent purity) to eliminate the effect of dissolved oxygen. All titrations were performed in glass-stoppered flasks, the atmosphere within being altered at will. Potassium dichromate was used directly for preparation of a 0.01000 *N* solution. That the pure compound can serve as a primary standard has been shown by Bray and Miller (*3*) and many others, and has been amply cross-checked in this laboratory by standardization of the same thiosulfate solution against pure potassium iodate from two sources. Six normal sulfuric acid was boiled for a few minutes, cooled, and bottled. Fifty per cent aqueous potassium iodide was prepared from the chemically pure salt. Sodium thiosulfate solution was prepared approximately 0.01 *N* from the pure salt.

OXYGEN ERROR. The thiosulfate solution was standardized in various ways, using 0.01000 *N* dichromate solution as the primary standard. Ten milliliters of the dichromate, 2 ml. of the iodide, and 2 ml. of the 6 *N* sulfuric acid were added in various orders, and the liberated iodine was titrated with the thiosulfate, using 1 ml. of freshly prepared starch solution as indicator.

In Table I is shown the effect of order of addition of reagents on the oxygen error. The operations were performed rapidly, the total time required for a run being approximately 4 minutes. These results indicate that, if all the operations are performed rapidly, the order of addition of reagents plays no part when the atmosphere is either nitrogen or air. With an oxygen atmosphere, there is a distinct increase in the quantity of the iodine liberated.

The data of Table II show that time and the order of addition of reagents definitely affect the oxygen error. If dichromate is added last in air, 10 minutes' standing will introduce up to 2 per cent, and 30 minutes up to 4 per cent error. This definitely indicates the probability of measurable errors in the usual iodometric procedure. The tabulated results form only a portion of the confirmatory observations which were made. Bruhns (*5*) found that atmospheric oxidation played no role. Kolthoff (*12*) confirmed this finding with proper experimental conditions, but found that increased

TABLE I. EFFECT OF ORDER OF ADDITION OF REAGENTS UPON THE OXYGEN ERROR

Order of Addition	Normality of Thiosulfate		
	N_2 atmosphere	Air	O_2 atmosphere
Dichromate, iodide, acid	0.00988 0.00988	0.00986 0.00988	0.00980 0.00978
Iodide, acid, dichromate	0.00988	0.00987	0.00979 0.00976
Acid, iodide, dichromate	0.00988	0.00988	0.00977 0.00977
Dichromate, acid, iodide	0.00987 0.00989	0.00988	0.00979 0.00977
Acid, dichromate, iodide	0.00989	0.00989	0.00977 0.00976

TABLE II. EFFECT OF TIME AND ORDER OF ADDITION OF REAGENTS UPON THE OXYGEN ERROR[a]

Order of Addition	N_2 Atmosphere		Air Atmosphere		O_2 Atmosphere	
	Time	*N*	Time	*N*	Time	*N*
	Min.		*Min.*		*Min.*	
Dichromate, acid, iodide	0.5 30	0.00987 0.00988	0.5 10	0.00988 0.00986	0.5 45	0.00978 0.00941
Acid, iodide, dichromate	0.5 45	0.00988 0.00987	0.5 10 30	0.00988 0.00972 0.00942	0.5 45	0.00977 0.00916

[a] The first two reagents were mixed and allowed to stand various lengths of time as indicated. The third reagent was added, allowed to stand 5 minutes, and the solution titrated rapidly with thiosulfate.

Table III. Precipitation of Barium Chromate

Time of Digestion	Blank, Ml. of 0.01081 N Thiosulfate
Min.	
Series 1, Ammonia Made from c. p. Ammonium Hydroxide	
5	0.233
15	0.293
60	1.053
Series 2, Carbonate-Free Ammonia	
5	0.228
15	0.248
60	0.218

Table IV. Adsorption of Chromate Ion by Barium Chromate in Faintly Ammoniacal Solution

Normality of Chromate in Filtrate	Adsorption
	%
0.00298 (theoretical)	None
0.00298	0.0
0.00299	−0.3
0.00296	0.6
0.00298	0.0
0.00297	0.3
0.00298	0.0
	Av. 0.1

acidity caused an appreciable oxygen error. These correct conditions have not been used in many of the published sulfate methods. In all subsequent titrations reported, the dichromate has been determined by adding iodide ion to acidified dichromate always in an atmosphere of nitrogen. This will henceforth be termed the "nitrogen method."

Many unreported determinations were also made using standard ferrous ammonium sulfate (Mohr salt) solution to titrate the dichromate directly to the end point of barium diphenylamine sulfonate. These values checked very closely with the data of the nitrogen method, and no oxygen error was found, thus confirming Bray and Ramsey (*4*).

Precipitation of Barium Chromate. Experiments were performed to determine the digestion time required for the complete precipitation of barium chromate from a faintly ammoniacal solution. Ten milliliters of water and 5 ml. of acidified barium chromate (0.06 mole dissolved in 1 liter of 0.4 *N* hydrochloric acid) were pipetted into a 25-ml. volumetric flask and brought to boiling, and 2 ml. of 6 *N* ammonium hydroxide were carefully added. The precipitates were digested for various lengths of time, the contents of the flask cooled, made up to volume, and filtered, and a 10-ml. aliquot was taken for titration of the chromate. This method gave the blank due to the reagents, shown in Table III, series 1.

Lengthened digestion time should have decreased the blanks because of more complete precipitation of barium chromate. The results found were due to carbonate ion contained in the ammonium hydroxide as shown in series 2. Carbonate caused the reaction, $BaCrO_4$ (*s*) + CO_3^{--} = $BaCO_3$ (*s*) + CrO_4^{--} to approach equilibrium. The approximate equilibrium constant of this reaction is $K = (CrO_4^{--})/(CO_3^{--}) = 0.126$ at 100° C. The effect of carbonate ion was eliminated by use of carbonate-free ammonium hydroxide, prepared by distillation of the commercial product from barium chloride. The data of series 1 were obtained by use of a fresh bottle of ammonia which probably contained little carbonate. The authors find no reference to this point in the literature.

Adsorption of Chromate Ion on Barium Chromate. In most volumetric chromate methods for sulfate, the excess barium is precipitated as chromate from a faintly alkaline solution. The question of adsorption of chromate ion on this precipitate was studied separately by the following experiment:

An accurate 0.01 *N* solution of barium chloride was prepared by weight and found by standardization against silver nitrate to be 0.01002 *N*. Into a 25-ml. volumetric flask, immersed in a boiling water bath, were pipetted 4.988 ml. of this barium chloride solution and 14.950 ml. of the standard 0.01000 *N* potassium dichromate. After several minutes, the solution was made faintly alkaline with carbonate-free ammonium hydroxide, and digestion continued for 15 minutes. The flask was cooled, and the solution was made up to volume and then filtered through a dry No. 40 Whatman's paper. Ten-milliliter aliquots were titrated using the nitrogen procedure. The theoretical normality was calculated on the assumption that the formula of the precipitate was $BaCrO_4$, and that no adsorption had occurred. The data are shown in Table IV.

It is seen that chromate ion is not adsorbed on barium chromate within experimental limits.

Precipitation of Barium Sulfate. Experiments were performed to determine the digestion time necessary for the complete precipitation of barium sulfate from barium chromate solution. Several 9.978-ml. portions of 0.00985 *M* potassium sulfate were pipetted into different 25-ml. volumetric flasks which were placed in boiling water. After a few minutes, 5 ml. of acid barium chromate were added dropwise, and the barium sulfate was digested for various lengths of time. The subsequent neutralization, digestion, filtration, and titration were performed as described above.

Digestion for 5, 15, and 60 minutes gave the same results within a variation of ±0.3 per cent, indicating that the precipitation of barium sulfate was independent of the time of digestion, within the limits stated. It did not necessarily indicate that all of the barium sulfate had been precipitated, for it was first necessary to show that the reaction, $BaSO_4$ (*s*) + CrO_4^{--} = $BaCrO_4$ (*s*) + SO_4^{--}, did not take place. Small portions of the filtrates above described were acidified and tested for sulfate ion with barium chloride. None was found, indicating that the reaction did not reverse during one hour's digestion.

Another experiment was performed as follows:

Barium sulfate was precipitated as in the preceding section, and digested for 15 minutes to ensure complete precipitation. Then 2 ml. of 6 *N* carbonate-free ammonium hydroxide and 3 grams of pure potassium dichromate were added, giving 1.3 *M* chromate ion, about 125 times that ordinarily liberated by the sulfate. This solution was digested for 5 hours, cooled, filtered, acidified with hydrochloric acid, and tested with barium ion. Only a very faint opalescence was observed. It may be stated that, under the conditions of the ordinary sulfate determination, the reaction, $BaSO_4$ (*s*) + CrO_4^{--} = $BaCrO_4$ (*s*) + SO_4^{--}, does not proceed. This confirms the results of Kolthoff (*11*). At this stage of the investigation, twelve analyses were run by the method described under "precipitation of barium sulfate." The results were reproducible to within 0.4 per cent but the absolute error was −5.5 per cent.

The effect of neglecting the volume of the precipitated barium sulfate and barium chromate in the 25-ml. volumetric flask amounted to 0.02 per cent and 0.07 per cent, respectively, and from the change in solubility of barium sulfate with ionic strength in faintly alkaline solutions it was calculated that all but a negligible fraction of the barium sulfate was precipitated in the presence of excess barium ion.

Co-precipitation of Chromate Ion with Barium Sulfate. In the usual chromate procedure, barium sulfate is precipitated in the presence of chromate ion, and co-precipitation of the latter is likely to occur. The effect has been studied by Kolthoff (*11*), but his interpretation appears to be doubtful, owing to the possible reduction of the dichromate ion by acidified chloride ion. At the suggestion of W. C. Bray, perchloric acid was used to reinvestigate the co-precipitation effect. Solutions of 0.1 *N* potassium sulfate and 0.1 *N* barium perchlorate were prepared, and the procedure was carried out as follows:

One milliliter of the sulfate solution was pipetted into a 25-ml. flask and various amounts of 60 per cent C. P. perchloric acid and 9.962 ml. of 0.01000 N potassium dichromate were added. The flask was placed in a beaker of boiling water and, after a few minutes, 0.9 ml. of the barium perchlorate solution was added. Digestion was continued for 15 minutes, and the subsequent operations were performed as previously described.

Table V. Effect of Acid Concentration on Co-precipitation of Chromate Ion with Barium Sulfate

Acidity after Precipitation of All $BaSO_4$	Co-precipitation
N	%
Series 1, Perchloric Acid	
1.0 (no Ba^{++} added)	None
0.01	29.7
0.1	4.4
1.0	1.5
Series 2, Hydrochloric Acid	
	(Apparent)
0.1	6
0.8	7
1.4	10.5

Table VI. Adsorption of Chromate Ions on Preformed Barium Sulfate

Normality of Chromate	Adsorption
	%
0.00591 (no Ba^{++} added)	None
0.00591	0.0
0.00589	0.3
0.00591	0.0
0.00589	0.3
0.00588	0.5
	Av. 0.3

The results in series 1 showed that chromate ions co-precipitated with barium sulfate even at concentrations as low as 4×10^{-4} N. While barium chromate might have precipitated at the lowest acidity, there was still marked co-precipitation even in approximately normal acid. This, then, was the cause of the low results which the authors had always observed in the application of the chromate method.

As is well known, chloride ion in acid solution reduces dichromate ion, and the acid barium chromate solution should be made up with perchloric, not hydrochloric acid. Failure to observe this precaution resulted in large errors, as shown in series 2. The increased acidity decreased the co-precipitation, but increased the reduction of dichromate ion, yielding the "apparent" values listed in the table. Chloride ion is evidently a definite interfering factor in the usual chromate method.

Adsorption of Chromate Ion on Preformed Barium Sulfate. The experiments described under "co-precipitation of chromate ion with barium sulfate" were repeated, except that the standard dichromate solution was added after precipitating barium sulfate and making the contents of the flask alkaline. Within the limit of experimental error, chromate ions were not adsorbed on preformed barium sulfate.

Other possible sources of error investigated and found to have no effect (±0.2 per cent) were filtration of standard potassium dichromate through Whatman's No. 40 filter paper, and addition of solid ammonium chloride to the cold dichromate to the extent of 10 per cent, since it was thought that ammonium dichromate might spontaneously decompose. Boiling 0.01 N potassium dichromate solutions in air for 1 hour entailed 0.7 per cent loss of hexavalent chromium, but boiling 10 per cent ammonium chloride solutions of potassium dichromate under the same conditions gave no increased loss of hexavalent chromium. Hydrochloric acid rapidly reduced hexavalent chromium at approximately 100° C., but the reaction was not autocatalyzed by the presence of large amounts of trivalent chromium ion.

Discussion of Results

From the results of the above experiments, it is evident that most of the published methods contain errors in the theory of their application. High results for sulfate and the methods in which they are obtained may be given by oxygen error (*2, 5, 7, 11, 13*), reduction of dichromate ion by chloride ion (*9*), and carbonate in the added base (all methods). The causes of low results are oxygen error (*9*), co-precipitation of chromate ion with barium sulfate (*2, 6, 7, 9, 11, 13*), and reduction of dichromate ion by acidified chloride ion (*2, 6, 7, 11, 13*).

The objection to the presence of counterbalancing errors is raised not because they exist *per se*, but because variations in the technic of individual workers on the same method yield results whose reproducibility may be satisfactory, but whose absolute accuracy may vary significantly.

Of the existing methods, the procedure of Gibson and Caulfield (*9*), of which only the barest details have been published, appears to be the most promising. With certain modifications, it should be possible to avoid most or all of the systematic errors. In their procedure, if the precipitation of the barium sulfate is carried out in about 0.1 N perchloric acid and carbonate-free ammonia added, the excess chromate which is subsequently added will not be co-precipitated or adsorbed by either the barium sulfate or barium chromate. Neither will it be reduced by chloride ion in hot alkaline solution, since the chloride is later removed in the filtration. If the Emich filter stick or a sintered glass filtered stick (*10*) is warmed in dilute (2 N) perchloric acid and the chromate determined by the "nitrogen method" or by titration with standard Mohr salt, which involves no oxygen error (*4* and unpublished data), such a procedure should be a distinct improvement on the existing methods. Preliminary work indicates this to be the case, and further work is in progress on such a revised method. The authors have been forced to the conclusion that there exists at present no entirely satisfactory microvolumetric chromate method for sulfates.

Acknowledgment

The writers wish to thank W. C. Bray, Department of Chemistry, University of California, for his interest and many helpful suggestions in the course of this investigation.

Literature Cited

(1) Ampt, G. A., *Australian Chem. Inst. J. & Proc.*, **2**, 10 (1935).
(2) Andrews, L. W., *Am. Chem. J.*, **11**, 567 (1889).
(3) Bray, W. C., and Miller, H. E., *J. Am. Chem. Soc.*, 46, 2204 (1924).
(4) Bray, W. C., and Ramsey, J. B., *Ibid.*, **55**, 2279 (1933).
(5) Bruhns, G., *Z., anal. Chem.*, **45**, 573 (1906).
(6) Bruhns, G., *Z. anorg. allgem. Chem.*, 49, 277 (1916).
(7) Foster, M. D., Ind. Eng. Chem., Anal. Ed., **8**, 195 (1936).
(8) Friedrich, A., and Rapoport, S., *Mikrochemie*, **14**, 41 (1933).
(9) Gibson, D. T., and Caulfield, T. H., *Analyst*, 60, 522 (1935).
(10) Kirk, P. L., Ind. Eng. Chem., Anal. Ed., **7**, 135 (1935).
(11) Kolthoff, I. M., *Rec. trav. chim.*, 40, 686 (1921).
(12) Kolthoff, I. M., *Z. anal. Chem.*, 59, 401 (1920).
(13) Morgulis, S., and Hemphill, M., *J. Biol. Chem.*, 96, 573 (1932).
(14) Raeder, M. G., *Kgl. Norske Videnskab. Selskabs Forh.*, **5**, No. 8, 32 (1933).
(15) Schroeder, W. C., Ind. Eng. Chem., Anal. Ed., **5**, 403 (1933).
(16) Sheen, R. T., and Kahler, H. L., *Ibid.*, **8**, 127 (1936).
(17) Strebinger, R., and Zombory, L., *Z. anal. Chem.*, 79, 1 (1929); 105, 346 (1936).

Received January 16, 1937.

ANALYTICAL EDITION

INDUSTRIAL and ENGINEERING CHEMISTRY

Harrison E. Howe, Editor

Determination of Silicon in Aluminum and Aluminum Alloys

H. V. CHURCHILL, R. W. BRIDGES, AND M. F. LEE, Aluminum Research Laboratories, New Kensington, Pa.

A REVIEW of the literature shows that analytical chemists have been more or less dissatisfied with the status of procedures for the determination of silicon in aluminum and aluminum alloys. The main basis of uncertainty lies in the fact that conventional methods of acid decomposition of the sample often yield a residue after dehydration which contains both silicon and silica. This situation is satisfactorily met by an alkaline fusion of the residue which oxidizes the silicon so that all the silicon before volatilization is present as silica. Callendar (*2*), however, pointed out the possibility and the actuality of errors in the determination of silicon by means of acid solution of the sample. The error was shown to be caused by a volatilization loss of silicon during solution of the sample. The possibility of such error has been tacitly recognized in most silicon methods by the use of oxidizing acids. Thus the inclusion of nitric acid in most acid mixtures recommended has silicon oxidation as one of its purposes.

Analytical work on various aluminum alloys prepared under careful control seems to indicate that acid decomposition yields satisfactory results in most cases, although in others low results seem to be produced.

It seems obvious that silicon losses would be affected by the exact kind of acid used, the physical condition of the silicon as controlled by the thermal history of the metal being analyzed, and possibly by the compounds in which the silicon occurred. Typical analytical data covering the above points are shown in Table I. In the second column *O*, *H*, *W*, and *T* have the following meaning: *O* designates metal which is fully annealed. *H* designates metal in a hard temper produced by cold working. *W* means temper of metal produced by solution heat treatment without any subsequent precipitation heat treatment. In the case of 17S, *T* refers to the temper of metal produced by solution heat treatment followed by aging at room temperature. In the case of 51S, *T* means the temper produced by solution heat treatment followed by a precipitation heat treatment. The third column refers to the use of an acid mixture made up of 485 cc. of water, 115 cc. of sulfuric acid, 200 cc. of hydrochloric acid, and 200 cc. of nitric acid. These proportions are not fortuitous but are the resultant of evolution based upon necessity. Smaller proportions of nitric acid result in low silicon recoveries.

The data in Table I are representative of a larger amount of data which cannot be presented within allowable space limitations. Data indicate satisfactory agreement between tri-acid and sodium hydroxide results except in specific cases discussed below, and indicate a trend toward low results in the case of perchloric acid.

TABLE I. SILICON CONTENT OF ALUMINUM AND ALUMINUM ALLOYS

(As determined after three methods of decomposition)

Alloy	Temper or Thermal History	Metal Decomposed by: Tri-acid	Perchloric acid	Sodium hydroxide
		%	%	%
51S	*O*	0.93 0.93	0.92 0.93	0.94 0.93
51S	*W*	0.85 0.86	0.75 0.73	0.94 0.93
51S	*T*	0.89 0.88	0.84 0.84	0.93 0.94
17S	*H*	0.50 0.51	0.51 0.51	0.51 0.51
17S	*O*	0.48 0.48	0.49 0.49	0.49 0.48
17S	*T*	0.48 0.48	0.48 0.47	0.49 0.49
2S	*H*	0.19 0.19	0.17 0.17	0.19 0.19
2S	24 hours at 148.89° C. (300° F.)	0.20 0.19	0.16 0.16	0.20 0.20
2S	24 hours at 260° C. (500° F.)	0.20 0.19	0.17 0.17	0.21 0.21
3S	*H*	0.25 0.25	0.25 0.24	0.25 0.25
3S	24 hours at 300° C.	0.26 0.25	0.24 0.25	0.25 0.27
3S	24 hours at 500° C.	0.25 0.25	0.26 0.25	0.26 0.26
43S	*H*	5.06 5.05	4.96 4.97	5.05 5.05
43S	24 hours at 148.89° C. (300° F.)	5.06 5.05	4.97 4.98	5.03 5.06
43S	24 hours at 260° C. (500° F.)	4.99 5.00	4.91 4.91	5.00 5.03

Marked differences between the tri-acid and the sodium hydroxide results are shown in the case of 51S-*W* and 51S-*T*. Satisfactory agreement is shown between the two methods when 51S-*O* is analyzed for silicon. Table II shows the normal alloying constituents or impurities present in the alloys.

TABLE II. NOMINAL COMPOSITION OF METALS ANALYZED

	2S	3S	43S	17S	51S
		%	%	%	%
Silicon	I[a]	I	5.00	I	1.00
Iron	I	I	I	I	I
Manganese	..	1.25	..	0.50	..
Copper	I	I	I	4.00	I
Magnesium	..	..	..	0.50	0.60

[a] I indicates element present only as impurity.

It is apparent that significantly discrepant results occur only in the case of aluminum alloyed with magnesium silicide and then only when the metal is in a heat-treated condition.

In laboratories wherein aluminum and aluminum alloys are analyzed on a routine basis, the filtrate from the silicon determination is used for the determination of other elements. When the tri-acid method is used for silicon, this filtrate is a sulfate solution which is convenient for further work. The filtrate, when the sodium hydroxide method is used, may consist of either sulfates or perchlorates according to which acid is used for dehydrating silica. However, the solution contains large amounts of sodium salts which are somewhat undesirable.

The tendency toward low results found when perchloric acid is used as the decomposition reagent is somewhat disappointing; the use of this acid is usually desirable in determining silica, since dehydration of silica is satisfactory and the subsequent re-solution of salts is more easily effected than when sulfuric acid is used.

The data shown are representative of many other data, all of which indicate that while the tri-acid method is satisfactory in most cases the sodium hydroxide method should be used when aluminum-magnesium silicide alloys are analyzed for silicon.

The following methods give satisfactory service in determining silicon in aluminum and aluminum alloys.

Tri-Acid Solution Method

Place 1 gram of sample in a 250-cc. beaker. Keeping the beaker covered as much as possible, cautiously add 35 cc. of acid mixture No. 1 (485 cc. of water, 115 cc. of sulfuric acid, 200 cc. of hydrochloric acid, and 200 cc. of nitric acid). When no further action can be seen, evaporate till heavy fumes of sulfuric acid are evolved for 15 minutes, cool, add 10 cc. of 1 to 3 sulfuric acid and 100 cc. of hot water, and boil until salts are dissolved. Stir in some paper pulp, filter through a close-textured paper, and wash well with hot water. Evaporate the filtrate to fumes, cool, dissolve in water, add pulp, filter, and wash as before. Ignite the residues in a platinum thimble. After cooling, mix with 1 to 8 grams (depending on amount of residue) of sodium carbonate. Fuse cautiously until nearly quiet, then finish with a strong heat. Run the melt up the sides of the crucible, cool, and place in a beaker with 50 cc. of 1 to 3 sulfuric acid.

When the melt has dissolved, remove the crucible, washing it out into the beaker. Evaporate, continue heating until heavy fuming has taken place for at least 15 minutes, and remove from heat. While still moderately warm, add a little cold water, followed by 100 cc. of hot water. Heat to complete solution of the soluble salts, but avoid too long treatment, as the silica tends to redissolve. Filter, after stirring in some paper pulp, and wash thoroughly with hot water. Evaporate the filtrate and heat to fuming again to separate silica, which may have escaped the former dehydration, and combine with the first residue obtained. Dry the filters with contents, then ignite in a platinum crucible at 500° C. until free from carbon, finish at 1000° C., cool, and weigh. Moisten with a few drops of diluted sulfuric acid and add several cubic centimeters of hydrofluoric acid. Evaporate dry, ignite, cool, and weigh again. The loss in weight represents silica. Deduct a determined blank. Silicon = silica × 0.4672.

Sodium Hydroxide Solution Method

Dissolve 0.5 to 1.0 gram of sample in a covered Monel metal beaker, using 15 cc. of 30 per cent sodium hydroxide solution. When violent action ceases, place on a hot plate and heat gently until the volume of solution is reduced to about 5 cc. If the solution is still dark, add 2 or 3 cc. of 3 per cent hydrogen peroxide to hasten oxidation and again reduce the volume to about 5 cc. Transfer the concentrated sodium hydroxide solution to a Pyrex beaker containing 80 cc. of 1 to 1 sulfuric acid. Thoroughly police the Monel metal beaker and, using a few cubic centimeters of dilute sulfuric acid, wash any adhering material into the Pyrex beaker. Add 2 cc. of concentrated nitric acid. Evaporate to copious fumes and finish by the usual silica volatilization procedure. (This method with double dehydration was used to obtain results shown in last column of Table I.)

Alternative Method. (This procedure is now preferred to the one given above because after dehydration salts are more easily dissolved.) Transfer the solution to a Pyrex beaker containing 65 cc. of 1 to 1 sulfuric acid and 20 cc. of 60 per cent perchloric acid. Thoroughly police the Monel beaker and cover and, using a few cubic centimeters of dilute sulfuric acid, wash any adhering material into the Pyrex beaker. Make double dehydration by evaporation to copious fumes and finish by usual silica volatilization procedure.

Another alternative procedure, substantially as published by the Aluminum Research Institute (*1*), is: Neutralize the concentrated sodium hydroxide solution with 1 to 1 hydrochloric acid and transfer it to a Pyrex beaker. Add 20 cc. of 60 per cent perchloric acid. Evaporate to copious fumes, cool, add 50 cc. of hot water, bring to a boil, filter at once using an ashless paper pulp, and wash with warm 1 per cent hydrochloric acid. Add 10 cc. of perchloric acid to filtrate, fume, and filter as before. Dry the filters with contents, then ignite in a platinum crucible at 1000° C. Add a few drops of sulfuric acid and ignite to constant weight. Cool and weigh. Finish by the usual silica volatilization procedure.

Literature Cited

(1) Aluminum Research Institute, Standard Methods for Sampling and Analyzing of Aluminum and Certain Aluminum Alloys, 1932.

(2) Callendar, L. H., *Analyst*, 58, 81 (1933).

Received February 5, 1937.

Determining the Aniline Point of Dark Petroleum Products

LEON DONN, The Texas Company, Beacon, N. Y.

THE aniline point (*2*) is the solution temperature of an oil with an equal part by volume of aniline. The Institution of Petroleum Technologists (*1*) describes a method for the determination of the aniline point of an oil, and remarks, regarding opaque oils (*3*), that their aniline points can usually be determined with suitable illumination or by observation of the thin film of the mixture which is splashed up on the sides of the tube during stirring.

This method works well with both transparent and not too dark oils. In the case of really opaque materials, however, it is practically impossible to obtain better than a rough approximation of the correct result. In view of this, a method has been developed particularly for dark products and has been found to give results that are in excellent agreement with those obtained by the I. P. T. method.

A consideration of the viscosity of a slowly cooling solution of two liquids in the region of their solution temperature reveals the following facts:

1. Above this temperature where true solution holds, the viscosity of the solution increases uniformly with decreasing temperature.
2. When, on cooling, the solution temperature is reached

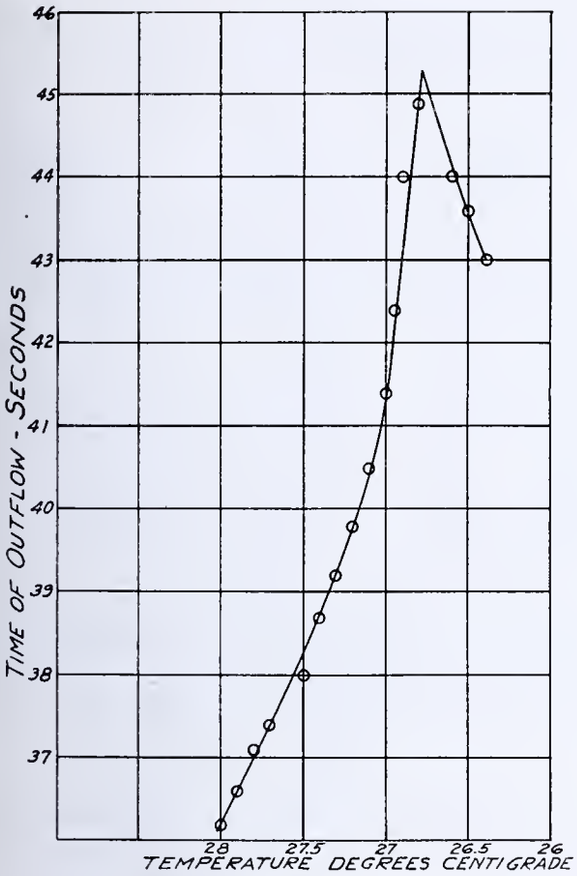

FIGURE 1. CURVE FOR SAMPLE 10

and the solution begins to separate into finely divided particles of its components, the emulsion-like mass thus momentarily formed causes a sharp increase in viscosity. This sharp peak corresponds very closely to the aniline point obtained by visual methods.

3. As the temperature continues to fall below the solution temperature, the particles of components grow rapidly in size, so that the emulsion no longer holds. During this period of cooling the viscosity is found to decrease rather than increase with cooling. This serves to accentuate the high viscosity peak.

Apparently, a study of the viscosity of a solution in the neighborhood of its solution temperature reveals its aniline point.

Procedure

Equal parts by volume of dry distilled aniline and sample are introduced into an Ostwald viscometer and the viscosity tube is heated by means of a suitable bath to a temperature sufficiently high to cause complete solution. During the heating, the mixture of sample and aniline is agitated by applying very gentle suction to the wide end of the viscometer, thereby causing a slow bubbling of air through the mixture which stirs it thoroughly. Solution having been effected, the bath is permitted to cool very slowly. At the same time relative viscosity readings are begun at this temperature above the aniline point, and continued as rapidly as possible during the cooling period. The time of outflow steadily increases with falling temperature until a maximum time of outflow is obtained. Thereafter, through a comparatively long period, the readings continually decrease with falling temperature. It has been found that the temperature corresponding to this maximum reading corresponds very closely with the aniline point obtained by the I. P. T. method.

The aniline used was of C. P. grade, and was dried by contact with anhydrous potassium carbonate for several days, and then distilled. Only the middle portion of the distillate was retained for use.

The Ostwald pipet corresponded to Eimer and Amend Catalog No. 32804 and had a time of outflow of 15 seconds at room temperature for a charge of 5 ml. of water.

The approximate temperature of complete solution can be determined in several ways, the simplest being by noting the appearance of the mixture in the capillary of the viscometer after a short stirring period. For very dark samples, whose solutions were even too opaque for observation through the finest viscometer capillary, a micromethod was employed, which consisted in rapidly transferring a drop of hot solution to a hot but gradually cooling microscope warming stage equipped with a thermometer, and promptly covering the drop with a cover glass. Observation through the microscope of the thin film produced by the drop between the two glasses showed the aniline point by the change in appearance from a clear, transparent, though often highly colored film, to the formation of a grainy film, the grains of which grew continually larger until small droplets were definitely formed.

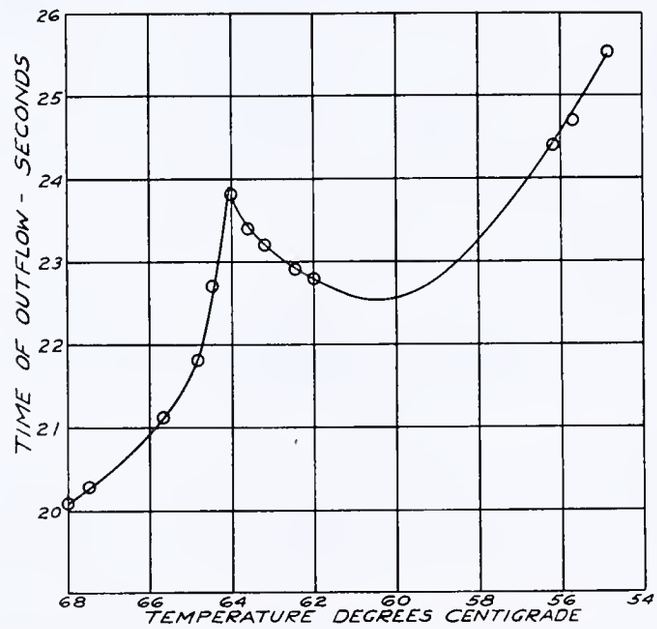

FIGURE 2. CURVE FOR SAMPLE 25

The first indication of graininess in the film was taken as the approximate aniline point, and the heating bath for the viscosity method was started at a temperature a few degrees higher than this. The behavior of the sample and aniline in the viscometer serves also to show whether the solution is complete. Successive viscosity readings of a complete solution with agitation of the solution between each reading should agree consistently with each other, while readings of an incomplete solution taken in the same way will be erratic and

TABLE I. SOLUTION TEMPERATURE

Sample	I. P. T. Method	Capillary-Tube Method	Micro-method	Narrow-Tube Method Run 1	Narrow-Tube Method Run 2	Viscosity Method Run 1	Viscosity Method Run 2
	° C.	° C.	° C.	° C.	° C.	° C.	° C.
1	...	71.2	..	..	..	71.8	71.95
2	...	Over 80	..	..	..	88.0	88.1
3	...	Over 90	..	..	..	94.1	93.9
4	...	89.8	..	..	..	89.9	...
5	...	...	..	..	..	63.6	63.7
6	...	...	..	56.5	57.5	57.5	57.7
7	...	...	..	65.0	66.0	65.8	65.7
8	...	...	..	48	49	48.7	48.8
9	...	...	41	..	..	41.8	41.6
10	...	...	26.5	..	..	26.8	26.85
11	...	...	35	..	..	37.3	...
12	...	...	77.5	..	..	76.8	76.9
13	...	...	72.5	..	..	75.6	75.3
14	...	...	23	..	..	22.8	22.7
15	...	...	69	..	..	67.3	67.3
16	...	...	60	..	..	57.5	58.0
17	...	...	54	..	..	49.0	49.0
18	...	...	60	..	..	58.0	59.0
19	...	...	69	..	..	64	...
20	73.5	...	73	..	..	73.3	73.5
21	68	...	68	..	..	68.1	...
22	43.8	...	45	..	..	...	...
23	46.9	...	49	..	..	...	...
24	48.4	...	49	..	..	...	...
25	63.5	...	..	..	..	64	...
26	Approx. 98	...	..	..	..	99.6	99.5
27	Over 98	...	..	..	..	104.2	104.2
28	Over 95	...	..	..	..	101.4	101.5
29	...	...	..	..	..	91	90.5

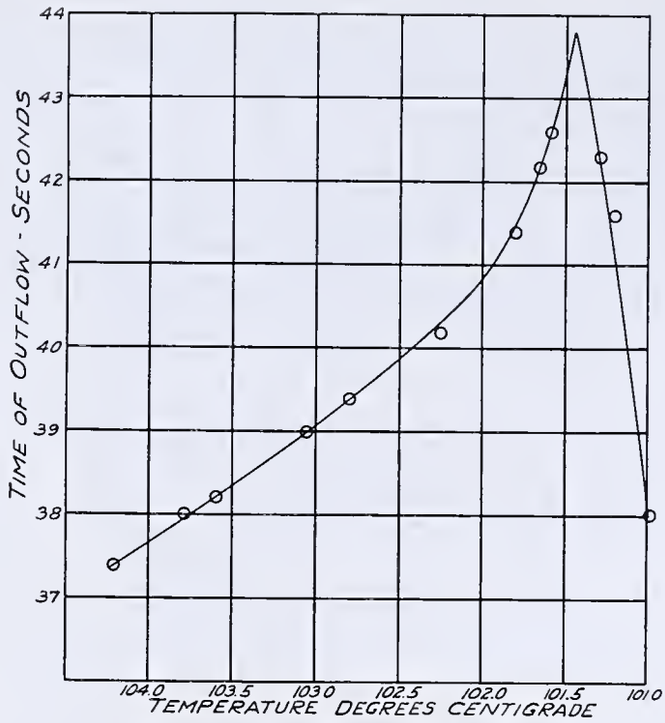

FIGURE 3. CURVE FOR SAMPLE 28

not agree, because of varying amounts of each ingredient running through the capillary.

Slow cooling of the bath is accomplished by having the immersion heater wired in series with a heavy rheostat. By adding or taking away resistance from the heater, the cooling can be cut down to a very slow rate. A smooth rate of cooling of about 1° C. in 5 to 10 minutes was found to be satisfactory. In case a sample has a solution temperature below room temperature, an immersed copper cooling coil is a convenience for further lowering the bath temperature.

Table I compares solution temperatures of different samples by various methods. The narrow-tube method is a modification of the I. P. T. method in which the test tube employed is a very narrow one and the quantities of sample and aniline are reduced to 1 ml. each.

TABLE II. READINGS ON THREE SAMPLES

Sample 10		Sample 25		Sample 28	
Temp. ° C.	Time of outflow Sec.	Temp. ° C.	Time of outflow Sec.	Temp. ° C.	Time of outflow Sec.
28.0	36.2	68.0	20.1	104.2	37.4
27.9	36.6	67.5	20.3	103.8	38.0
27.8	37.1	65.7	21.1	103.6	38.2
27.7	37.4	64.8	21.8	103.1	39.0
27.5	38.0	64.5	22.7	102.8	39.4
27.4	38.7	64.0	23.8	102.25	40.2
27.3	39.2	63.6	23.4	101.8	41.4
27.2	39.8	63.2	23.2	101.6	42.6
27.1	40.5	62.4	22.9	101.3	42.3
27.0	41.4	62.0	22.8	101.2	41.6
26.95	42.4	56.2	24.4	101.0	38.0
26.9	44.0	55.7	24.7	...	..
26.8	44.9	54.9	25.5	...	..
26.7	44.8	..	..	...	..
26.6	44.0	..	..	...	..
26.5	43.6	..	..	...	..
26.4	43.0	..	..	...	..

Table II and Figures 1, 2, and 3 illustrate the rise of the viscosity to a peak and its subsequent fall, the peak representing the aniline point. Readings on run of sample 25 were continued in order to show the second upward turn of viscosity after the peak in viscosity had been reached.

Summary

A new method is described for the determination of aniline point or solution temperature, applicable particularly to dark-colored samples.

Literature Cited

(1) Inst. Petroleum Tech., "Standard Methods of Testing Petroleum and Its Products," 3rd ed., p. 20, 1935. I. P. T. Serial Designations F. O. 23.
(2) Tizard, H. T., and Marshall, A. G., *J. Soc. Chem. Ind.*, **40**, 20T (1921).
(3) Van Wyk, W. R., *J. Inst. Petroleum Tech.*, **22**, 754 (1936).

RECEIVED February 6, 1937.

Refractive Index of Strontium Nitrate

M. L. YAKOWITZ AND P. S. JORGENSEN
Food and Drug Administration, U. S. Department of Agriculture, San Francisco, Calif.

THE use of immersion methods for determining the refractive indices of solids requires a series of immersion liquids whose refractive indices are known with an accuracy of about 0.001. The refractive indices of the immersion liquids may be determined in a refractometer or by use of a series of isotropic crystals whose refractive indices are known. Chamot and Mason (*2*) list such a series of isotropic crystals to be used in determining the refractive indices of liquids by immersion methods. In this list, the refractive index of strontium nitrate [$Sr(NO_3)_2$] is given as 1.567.

While checking the refractive indices of a set of immersion oils, it was found that the value given by Chamot and Mason is incorrect. The refractive index of strontium nitrate determined by the immersion method, using white light, is 1.586. The sample of strontium nitrate used was analyzed and found to be pure $Sr(NO_3)_2$ with less than 0.1 per cent water.

A check of the literature showed that the refractive index of strontium nitrate is given as 1.5667 by International Critical Tables (*7*), Fry (*5*), and Landolt, Bornstein, and Roth (*9*). The compilers of these tables apparently took the value of 1.5667 from the standard work of Groth (*6*), who depended upon the determinations of Fock (*4*) and Craw (*3*). The correct value is given by Behr (*1*) who found strontium nitrate to have a refractive index of 1.5878, using sodium light and the more accurate crystal refractometer. Keenan (*8*) states that he has depended on Behr's determination, which appears to be more nearly correct.

Literature Cited

(1) Behr, *Neues Jahrb. Mineral. Geol.*, **1**, 138 (1903).
(2) Chamot, E. M., and Mason, C. W., "Handbook of Chemical Microscopy," Vol. I, p. 387, New York, John Wiley & Sons, 1931.
(3) Craw, *Z. phys. Chem.*, **19**, 277 (1896).
(4) Fock, *Z. Kryst. Mineral. Petrog.*, **4**, 585 (1880).
(5) Fry, W. H., U. S. Dept. Agr., *Bull.* **1108** (1922).
(6) Groth, P., "Chemische Krystallographie," Vol. II, p. 104, Leipzig, W. Engelmann, 1908.
(7) Intern. Critical Tables, Vol. I, p. 165, General Index No. 2458 (1926).
(8) Keenan, G. L., private communication.
(9) Landolt, Bornstein, and Roth, "Physikalisch-chemische Tabellen," p. 983, Table 212-D (1912).

RECEIVED March 19, 1937.

A Comparison of Quantitative Methods for the Determination of Copper

H. W. FOOTE AND JOHN E. VANCE, Yale University, New Haven, Conn.

THE three most widely used methods for the quantitative determination of copper are the electrolytic, the gravimetric, based upon the precipitation of cuprous thiocyanate (or a combination of this with an oxidation titration), and the volumetric, which depends upon the fact that bivalent copper will liberate an equivalent amount of iodine from a soluble iodide. Each method has certain advantages and disadvantages.

The electrolytic method is most susceptible to error in the presence of other ions. The gravimetric thiocyanate method is applicable in the presence of ions other than those of lead, mercury, tellurium, selenium, and the precious metals. The iodometric method is also widely applicable, the interfering substances being arsenic, antimony, iron, hexavalent molybdenum, selenium, and the oxides of nitrogen. In the majority of cases met in practice, the interfering elements in the iodometric method can be controlled by the use of a buffer solution and by the addition of suitable reagents (*5*, *6*).

Recently it has been shown (*2*) that the volumetric method is capable of giving more exact results when the usual procedure is modified slightly, and the present work has been carried out with the purpose of comparing this modified iodometric method with the standard methods. This modification consists simply of the addition of 1 to 2 grams of a soluble thiocyanate to the solution after almost all of the iodine liberated has been removed by the thiosulfate solution. With this modification the method is so nearly quantitative that the iodine standard of the thiosulfate may be calculated in terms of copper without the need for an empirical standardization with copper. In the presence of the interfering elements already noted, the arsenic, antimony, and iron are oxidized and a buffer solution is prepared, which will prevent the pentavalent arsenic and antimony from liberating iodine from the potassium iodide. The ferric iron is converted into a complex fluoride (*5*). Park (*6*) recommended the use of a phthalate buffer, for the reason that the reaction liberating iodine proceeds too slowly in the presence of the more usual acetate buffer solution. However, with the modification mentioned (*2*), an acetate buffer may be used. Sodium fluoride or ammonium bifluoride may be used to form the complex iron fluoride. During the progress of this work an article appeared (*1*) pointing out that the addition of ammonium bifluoride to an acid solution produces a buffer solution of the correct pH to prevent the interference of arsenic and antimony, as well as the interference of iron. This procedure was also included in the methods studied.

Procedures

The electrolytic method (*a*) was the usual procedure as described by Hillebrand and Lundell (*3*).

The gravimetric thiocyanate method (*b*) was according to Hillebrand and Lundell (*3*) or that recommended by Kolthoff and v. d. Meene (*4*).

The iodometric method (*c*) using an acetate buffer was carried out in the following manner:

The samples were dissolved in aqua regia with subsequent addition of potassium chlorate. The equivalent of 10 ml. of 6 *N* sulfuric acid was added and the nitric acid was removed completely, often with an additional evaporation with hydrochloric acid. The residue was taken up in 20 to 40 ml. of water and the equivalent of 25 ml. of 6 *N* acetic acid and 12 ml. of 6 *N* ammonium hydroxide was added. The resulting buffer solution has a pH of approximately 3.7. Interfering elements were, in general, added before the solution of the copper ore. Following the preparation of the buffer, sodium fluoride was added directly before titration, 1 gram being used for every 0.1 gram of iron.

The iodometric method (*d*) using ammonium bifluoride was identical with (*c*) except that no acetic acid nor ammonia was added, the bifluoride being added directly to the sulfuric acid solution.

TABLE I. ANALYSIS OF ORE AND COPPER SULFIDE[a]

Method	Chalcocite Ore		Maximum Deviation	Copper Sulfide		Maximum Deviation
CuCNS	74.47	0.05 (7)[b]	+0.11	64.01	0.02 (4)	−0.06
Iodoacetate	74.36	0.03 (7)	+0.08	63.98	0.03 (5)	+0.09
Electrolytic	74.44	0.04 (3)	+0.07	64.05	0.02 (3)	+0.03
Iodofluoride	...	....	..	63.98	0.03 (6)	+0.11

[a] Deviation indicated is the mean deviation.
[b] Numbers in parentheses refer to the number of experiments carried out using the particular procedure.

To the solutions resulting from procedures (*c*) or (*d*), potassium iodide was added and the liberated iodine titrated with sodium thiosulfate with the addition of ammonium thiocyanate near the end point. The sodium thiosulfate was standardized against nearly pure copper of known copper content.

The source of the copper used in the determinations was either a specially prepared sample of cupric sulfide or a chalcocite ore, kindly provided by Professor Bateman of the Department of Geology of this university. The results showed no essential differences, whichever of the two samples was used. Arsenic and iron were added together in the form of arsenopyrite, or separately as dihydrogen potassium arsenate and a solution of ferric nitrate. The antimony was in the form of potassium antimonate.

The samples of copper sulfide and chalcocite were very finely ground and as a consequence either oxidized or adsorbed moisture very slightly over the period of time during which the experiments were performed. In order always to be able to compare the results with the known copper content of the pure samples, the two sources of copper were analyzed frequently, in most cases a sample of the pure ore being run simultaneously with the analysis of the same ore to which interfering elements had been added.

Table I shows the results of analyses of the synthetic cupric sulfide or chalcocite. The term "iodoacetate" refers to the modified iodometric method in an acetate buffer, while "iodofluoride" refers to the same method using a fluoride-bifluoride buffer solution alone.

Interfering Elements

In the presence of the interfering elements normally found in copper ores or alloys, the electrolytic method is not applicable, so it was used only in analyses of the pure sulfides. Its use here, however, serves to show the high accuracy of the volumetric method; in general, the volumetric method agrees approximately within one part in a thousand with the two gravimetric methods, though it is definitely low by that amount. The possibility that there were traces of interfering elements in the chalcocite ore was considered; in fact, 0.02 per cent of silver was found and the results are corrected by that amount. All other elements which might interfere were found to be absent.

TABLE II. ANALYSES IN PRESENCE OF INTERFERING ELEMENTS[a]

Substances Added	Fe	Fe	AsV	SbV	Arsenopyrite			Fe + As	Fe + As + Sb
	Gram	*Gram*	*Gram*	*Gram*	*Gram*	*Gram*	*Gram*	*Gram*	*Gram*
Amounts	0.05–0.14	0.2–0.3	0.04–0.2	0.008–0.023	0.1–0.2	0.3–0.4	0.1–0.2 + Fe 0.07–0.14	Fe 0.07–0.14 As 0.05–0.2	Fe 0.07–0.2 As 0.06–0.2 Sb 0.015–0.032
CuSCN	−0.07(8)[b]	−0.12(3)	−0.05(6)	−0.09(6)	−0.05(3)	−0.05(2)	.....	.....	.....
Maximum deviation	−0.14	−0.15	−0.21	−0.19	−0.22	−0.07	.....	.....	.....
Iodoacetate	−0.03(9)	−0.05(5)	+0.02(9)	−0.09(5)	−0.08(7)	−0.30(3)	−0.27(2)	−0.20(6)	−0.18(3)
Maximum deviation	−0.13	−0.15	+0.14	−0.17	−0.28	−0.40	−0.28	−0.38	−0.28
Iodofluoride	−0.20(7)	−0.93(3)	.....	.....	−0.08(6)	−0.02(2)	−0.24(1)	−0.24(6)	.....
Maximum deviation	−0.41	−1.77	.....	.....	−0.19	−0.04	.....	−0.41	.....

[a] Figures given for each method are mean deviations from per cent of copper in pure sample.
[b] Figures in parentheses give number of determinations carried out in each particular case.

The results of nearly 100 analyses carried out in the presence of interfering elements are given in Table II. The arsenopyrite used had the following percentage composition: Fe, 33.88; As, 45.35; S, 19.62; SiO_2, 0.87. Copper, if present, amounted to less than 0.02 per cent and was disregarded.

The size of sample of ore or cupric sulfide was varied within wide limits, and about half the results were carried out using a weight buret, the other half being with a volume buret.

Several conclusions may be drawn from the results: The results are generally low by a small amount. The iodofluoride method fails in the presence of more than 0.15 gram of iron (column 2), but is slightly more accurate than the iodoacetate method in the presence of large amounts of arsenopyrite (column 6). In general, the results of the volumetric methods are excellent. In the presence of usual amounts of iron and arsenic, such as are likely to be found particularly in ore analysis, it is of no consequence which of the two volumetric procedures is used, and both are in perfect agreement with the more laborious method involving the precipitation of copper thiocyanate (column 5). It was always noted that in using the iodofluoride method the end point was distinctly yellow rather than white, and consequently not quite so sharp as in the iodoacetate method. Column 9 shows the results of the iodoacetate method in the presence of all three commonly occurring interfering elements.

The gravimetric procedure is applicable in the presence of as much as 35 mg. of antimony; the results are not shown in the table.

Literature Cited

(1) Crowell, W. R., Hillis, T. E., Rittenberg, S. C., and Evenson, R. F., IND. ENG. CHEM., Anal. Ed., 8, 9 (1936).
(2) Foote, H. W., and Vance, J. E., *J. Am. Chem. Soc.*, 57, 845 (1935); IND. ENG. CHEM., Anal. Ed., 8, 119 (1936).
(3) Hillebrand and Lundell, "Applied Inorganic Analysis," New York, John Wiley & Sons, 1929.
(4) Kolthoff, I. M., and Meene, G. H. P. v. d., *Z. anal. Chem.*, 72, 337 (1927).
(5) Mott, W. R., *Chemist-Analyst*, No. 5, 7 (1912).
(6) Park, B., IND. ENG. CHEM., Anal. Ed., 3, 77 (1931).

RECEIVED February 23, 1937.

Determination of Rotenone in Derris and Cube

Crystallization from Extracts

HOWARD A. JONES, Bureau of Entomology and Plant Quarantine, U. S. Department of Agriculture, Beltsville, Md.

SEVERAL years ago the author proposed a method for the determination of rotenone in plant material involving extraction and crystallization with the use of carbon tetrachloride (*4*). Since that time numerous similar methods have been proposed, usually employing other extraction solvents, but in most cases crystallizing the rotenone from carbon tetrachloride. Cahn and Boam (*2*) have made a detailed study of the extraction and crystallization and have proposed a modified procedure embodying several improvements. They have, however, questioned the accuracy of the crystallization, particularly for samples of low rotenone content. Other investigators (*1*, *3*, *6*) have stressed the need of more rapid extraction and have suggested other solvents, but have made no detailed study of the crystallization. The method used in this laboratory has also been changed from time to time since the procedure was published. The need for a shortened procedure and the importance of a knowledge of the accuracy of the determination have led to a more detailed study of this method for rotenone determination.

The method involves two phases, extraction and crystallization. It is necessary to decide on the latter procedure first, since errors in, or improvements of, the extraction can be studied only by means of crystallization. The present article will be confined to a description of the crystallization procedure adopted, a discussion of its mechanism, and an evaluation of its accuracy.

Proposed Crystallization Procedure

The crystallization procedure finally adopted is similar to the original method, but the size of sample has been reduced, precautions have been taken to assure quantitative crystallization, and a test for the purity of the separated solvate has been introduced. The exact procedure is as follows:

The extract from a 25-gram sample of root in a 125-cc. Erlenmeyer flask is evaporated on the steam bath in a current of air until free of solvent. The residue is treated with exactly 25 cc. of carbon tetrachloride, the flask is loosely stoppered, and complete solution is effected by gentle warming. The extract is next cooled in an ice bath for several minutes and then seeded with a few crystals of rotenone–carbon tetrachloride solvate. The flask is then tightly stoppered and swirled until crystallization is apparent. If at this stage only a small amount of crystalline material separates, an accurately weighed quantity of pure rotenone should be added, the mixture warmed to effect complete solution, and crystallization again induced. Sufficient rotenone must be present so that the result, expressed as "pure" rotenone, is at least 1 gram. At the same time a solution of rotenone in carbon tetrachloride containing 0.27 gram per 100 cc.

of solution (the solubility at 0° C.) is prepared for use in washing. The extract and the washing solution are then placed in an ice bath capable of maintaining a temperature of 0° C. overnight.

In the morning (the method is based on a crystallization time of 17 to 18 hours) the extract is filtered rapidly through a weighed Gooch crucible in the bottom of which has been placed a disk of filter paper, the flask being removed from the ice bath only long enough for pouring a small portion of extract into the crucible. The separated crystalline material is rinsed from the flask and washed under suction with sufficient of the ice-cold saturated solution (usually 6 to 10 cc.) to remove the excess mother liquor. Suction is applied for about 5 minutes, and then the material is dried to constant weight at 40° C., which usually requires about 1 hour. This is the weight of crude rotenone–carbon tetrachloride solvate.

The contents of the crucible are then broken up with a spatula and thoroughly mixed, and a 1-gram sample is placed in a 50-cc. Erlenmeyer flask where it is treated with 10 cc. of alcohol which has been saturated with rotenone at room temperature. The flask is swirled for a few minutes and then tightly stoppered and set aside at the same temperature for 4 hours. The mixture is then filtered at the same temperature through a weighed Gooch crucible with filter-paper disk. The crystals are rinsed from the flask and washed under suction with the solution of alcohol saturated with rotenone at the temperature of the recrystallization. About 5 cc. are usually required for this. Suction is applied for about 3 minutes, and then the material is dried at 105° C. to constant weight, or for about 1 hour. The weight in grams is multiplied by the weight of crude solvate, and to the product is added 0.07 gram, representing the correction for rotenone held in solution in the 25 cc. of carbon tetrachloride used in crystallization. If any pure rotenone was added, its weight must be subtracted from the value obtained. This gives the weight of "pure" rotenone contained in the extract of the 25-gram root sample.

General Procedure of Study

In this study the general procedure was to make use of aliquots of large volumes of carbon tetrachloride extracts of several root samples, to avoid errors due to possible differences in extraction.

In preparing an extract, 250 grams of root were treated with 1 liter of carbon tetrachloride and the mixture was boiled on the steam bath under a reflux condenser for several hours. The mixture was filtered by suction and the marc washed on the filter with a small amount of hot carbon tetrachloride. The clear filtrate and washings, refiltered if necessary, were then made to exactly 1 liter. A 100-cc. aliquot of this represented approximately a 25-gram sample of the root. By using aliquots of a single extract in the comparative study of any particular point in the method, samples of exactly the same composition were assured. These aliquots were evaporated to dryness and treated by whatever procedure was being tested. The total solid content of each extract was determined by evaporation of smaller aliquots. It was found that heating the dried extract on the steam bath overnight caused considerable decomposition, and excess heating should therefore be avoided. A number of comparative determinations were made by several methods of crystallization in which one sample of a pair was evaporated in a current of air and the other in a current of carbon dioxide, with no difference in the final result.

Time of Crystallization

The rate of crystallization of the solvate is an important factor in the procedure. It has been found that the crystallization is markedly retarded by the resinous, or nonrotenone, portion of the extract. Thus, solutions of pure rotenone in carbon tetrachloride reached the point of equilibrium by crystallization, as judged by no additional separation, in a much shorter time than did similar solutions containing equal amounts of rotenone in the presence of other extractives of derris and cube. Further, in the cases of both pure rotenone and rotenone in extracts crystallization was more rapid when larger proportions of rotenone were present, in accordance with the established fact that rate of crystallization is greater with a higher degree of supersaturation. Because of this fact it seems wise to run the crystallization at as low a temperature as practical. The results also indicate that the resinous portion of the extract exerts practically no solvent effect on the rotenone solvate. This point will be discussed more fully in connection with the accuracy of the method.

Purity of the Solvate

The amount of washing that should be given the separated solvate must be left to the judgment of the analyst. Sufficient wash solution should be used to remove most of the mother liquor. Additional washing effects no appreciable increase in purity and, as Cahn and Boam (*2*) have pointed out, causes a loss even when a saturated solution is used. It is believed that the impurity in the washed, dried solvate crystals is principally adsorbed resin.

Cahn and Boam (*2*) have proposed a purity test for the solvate and have found that by this test the crystals as ordinarily obtained are from 80 to 90 per cent pure. This test is based on the fact that the solvate, when treated with a small proportion of alcohol, undergoes solution and recrystallization as rotenone, a purification resulting as in any recrystallization. They used 5 parts of saturated alcohol to 1 part of solvate and allowed the mixture to stand overnight at room temperature. This method was used by the present author in preliminary work on improving the crystallization, and found to be rather satisfactory. However, a shorter method with a reasonable degree of accuracy was desired.

Attempts were first made to obtain the original solvate in a state of higher purity. Crystallization from a larger proportion of carbon tetrachloride than that usually employed gave material of higher purity, but to obtain solvate of the desired purity by this method would require volumes of solvent so large as to cause difficulty in handling and introduce a source of considerable error.

To test methods of determining the purity of the separated solvate, samples of crude solvate of known purity were prepared. It was desired to have these resemble as closely as possible the solvate obtained in the usual procedure. Therefore, extracts containing known, small amounts of rotenone (prepared as described under Accuracy of the Method) were treated with an amount of pure rotenone calculated to give the desired purity, the whole was dissolved in hot carbon tetrachloride, and the solution evaporated to a small volume. The carbon tetrachloride remaining after this evaporation was considerably in excess of that required to combine with the rotenone present as solvent of crystallization. The solution was cooled to room temperature, and stirred continuously until the solvate had crystallized to a pasty consistency. The mixture was stirred frequently until dry, was then thoroughly mixed, and all lumps were broken up.

It was found that, by heating these impure solvates to constant weight at 105° C. and assuming the loss in weight to be all carbon tetrachloride of crystallization from the rotenone, values approximating the known purities of the solvates were obtained. Considerable time was required, however, to remove the solvent of crystallization, and the method is less accurate than one based on a determination of the rotenone, since it is based on the determination of less than 28 per cent of the weight of solvate.

Comparative tests were then made of the original Cahn and Boam test and analogous procedures using different proportions of solvent and shorter periods of time. Results of some of these tests are shown in Table I.

It was found that when the proportion of alcohol was increased to 10 cc. per gram of solvate the conversion to pure rotenone was complete in 4 hours, and the values obtained, although a trifle lower than those given by the original Cahn and Boam test, in general more nearly approached the correct values for the known solvates. The modified test has been adopted, largely because it is easier to handle. It will be

Table I. Comparison of Purity Tests on Samples of Rotenone–Carbon Tetrachloride Solvate of Known Purity

(Expressed as percentage of pure rotenone–carbon tetrachloride solvate)

Extract	Known Purity	Purity by Cahn and Boam Test and Modifications: With 5 cc. of alcohol, Overnight	With 5 cc. of alcohol, 4 hours	With 10 cc. of alcohol, Overnight	With 10 cc. of alcohol, 4 hours
Derris A	81	81.5	81	..	80.5
	81	81	81.5	80	80
	90.5	90	91.5	89.5	89
Cube	80.5	82	..	79.5	80
	90.5	92.5	..	90	91
Derris B	80.5	82	..	..	80
	85.5	87	..	..	85
	90.5	91	..	..	89

Table II. Purity of Rotenone–Carbon Tetrachloride Solvate

(Crystallized from different proportions of rotenone to nonrotenone resin in 25 cc. of carbon tetrachloride)

Extract	Nonrotenone Resin *Grams*	Rotenone *Grams*	Purity of Solvate %
Cube	2.93	2	96.5
		1	92.5
		0.5	91.5
		0.4	91
		0.3	90
Derris	2.26	2	94
		1	90.5
		0.5	84
		0.4	84.5
		0.3	84

noted from Table I that the test may be allowed to stand overnight, if more convenient, with practically the same results.

The data in Table II show that the purity of the solvate increases with the proportion of rotenone to nonrotenone resin.

Likewise, with a given amount of rotenone and nonrotenone resin—that is, with a given total extract—the purity is dependent on the amount of solvent. Thus, a derris extract containing about 1 part of rotenone to about 1.7 parts of nonrotenone resin when crystallized from a solution having a proportion of 1 gram of total extract to 6.5 cc. of carbon tetrachloride gave a solvate of 93 per cent purity, while the same extract crystallized from a solution having a proportion of 1 gram of total extract to 2 cc. of solvent gave a solvate of 86 per cent purity. In each case crystallizations of the solvate were made at both room temperature and 0° C., with no difference in the purity obtained.

The purity of the solvates obtained has ranged from about 70 to 95 per cent. This test is merely a recrystallization dependent on the difference in solubility between rotenone and the solvate, and therefore does not give absolutely pure rotenone. Melting points of the "pure" rotenone obtained have ranged from 155° to 162° C., and it was readily shown that its purity, as judged by the melting point, depended on the purity of the solvate from which it was obtained. Thus the error involved becomes larger with increasingly impure solvate. For this reason it is desirable to use a method in which the solvate is obtained in as pure a form as possible in the original crystallization.

Precision of the Method

The precision of the method adopted was tested with nine aliquots of an extract of derris root (No. 2). From preliminary tests it was known that the rotenone content would be somewhat above 4 per cent, and hence within the range of complete crystallization. To one of the aliquots 0.5 gram of rotenone was added, but on crystallization no excess rotenone was obtained. The "pure" rotenone ranged from 1.114 to 1.148 grams; with a mean of 1.129 grams; equivalent to 4.5 per cent of the root. The standard deviation was ±0.013 gram, or a standard deviation of about ±0.05 per cent in the final result.

Accuracy of the Method

Preparation of Extracts of Known Rotenone Content. To determine the accuracy of the crystallization method it was necessary to have extracts of known rotenone content, preferably low, to which various amounts of rotenone might be added. There were on hand several samples of derris root that had yielded no rotenone by the old method of crystallization but were found to contain small percentages on examination by more recent and careful means. The exact amount could not be determined, however, until the accuracy of the method had been ascertained. Several attempts were made to eliminate rotenone from these and other root samples by crystallization at 0° C., or slightly below from extracts dissolved in mixtures of carbon tetrachloride and petroleum ether. These methods failed to give resins free of rotenone, but they were used in some preliminary tests.

All the work up to this point had indicated that the resins had no effect on the solubility of the solvate in carbon tetrachloride, and with this assumption as a basis the following procedure was used to obtain extracts of an approximately known rotenone content:

A carbon tetrachloride extract of a root sample with a large proportion of rotenone was freed of solvent and then dissolved in carbon tetrachloride at the rate of 1 cc. of solvent for each gram of original root sample. This extract was allowed to crystallize in a closed vessel for at least 48 hours at a constant temperature at which the solubility of rotenone in carbon tetrachloride was known. Approximately room temperature was used for the crystallization and filtration, because of the greater ease of keeping a large volume of extract at such a temperature during filtration. It is believed that the large proportion of rotenone present and the long crystallization period assured equilibrium. If the resins have no solvent effect, the amount of rotenone remaining in solution is calculable from the known solubility figure.

The extract was filtered by suction at the same temperature, and the crystalline material was pressed out to remove all possible mother liquor. Here slight errors enter which are due to solvent remaining in the mother liquor held in the separated residue and to solvent of crystallization. Approximate corrections were made on the basis of the purity of the unwashed separated solvate. The filtrate was then made to a definite volume with carbon tetrachloride, and aliquots were taken of such size as to be equivalent to a 25-gram root sample. To the dried aliquots were added various amounts of pure rotenone ranging from 0.2 to 2.0 grams, each was treated with 25 cc. of carbon tetrachloride, and crystallization was carried out at

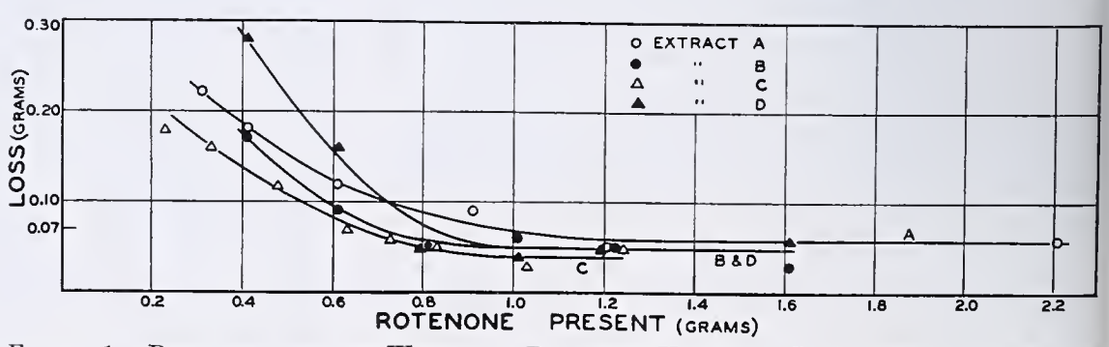

Figure 1. Relation between Weight of Rotenone Known to Be Present in Extracts of Derris and Cube and Weight Lost on Crystallization from Carbon Tetrachloride

Normal Extracts

0° C. exactly according to the procedure outlined in the first part of this paper, except that no correction was made for the solubility of rotenone in the 25 cc. of solvent used for crystallization.

From the known solubility of rotenone in carbon tetrachloride at 0° C. we might expect a loss of about 0.07 gram. Some of the results have been plotted, and are shown in Figures 1, 2, and 3.

Results with Normal Extracts. Figure 1 shows the results obtained with extracts of normal root samples. The original roots had contained from about 4 to 6 per cent of rotenone. After preliminary crystallization the nonrotenone portions were as follows:

Sample	Extract	Weight per Aliquot, Grams	Per Cent of Root
Derris No. 1	*A*	2.07	8.3
Derris No. 2	*B*	2.21	8.8
Cube	*C*	2.56	10.2
Timbo	*D*	3.04	12.2

These are in the range of values normally obtained for the nonrotenone portion of such roots. As seen from the graph, the loss of rotenone in crystallization from these extracts was great when only small amounts were present, but decreased with increasing amounts of rotenone until at 0.8 to 1.0 gram it became practically constant. This constant loss approximated the loss expected from the solvent effect of the 25 cc. of carbon tetrachloride.

Effect of Abnormal Resin Content. To determine what effect a widely different proportion of nonrotenone resin would have on these losses, either because of changing the rate of crystallization or because of possible solvent effect, portions of an extract of derris No. 1 that had been subjected to exactly the same procedure for preliminary crystallization as was given extract *A* were adjusted to larger and smaller volumes before taking aliquots, thus giving extracts with lower and higher resin content than in *A*. Similarly, an extract of derris No. 2 was prepared to give a higher resin content than *B*. The nonrotenone content of these extracts was as follows:

Derris Sample	Extract	Weight per Aliquot, Grams	Per Cent of Root
No. 1	*E*	3.25	13.0
No. 1	*F*	1.14	4.6
No. 2	*G*	4.91	19.6

The losses obtained on crystallization of aliquots of these extracts are shown in Figure 2. The losses fall in the same region as those obtained on extracts with normal resin contents, and they reach about the same constant value, the loss then approximating that due to solubility. This indicates that, within the limits of resin content tested, which represents the range normally encountered in commercial samples of derris and cube, the retarding effect on the rate of crystallization for a given rotenone content is about the same for high, low, and normal resin contents. The results also strengthen the belief that the resin has no appreciable solvent effect on rotenone, since if such an effect were present the constant loss obtained with extracts of higher resin content would be definitely higher than that obtained with extracts of normal or lower resin content.

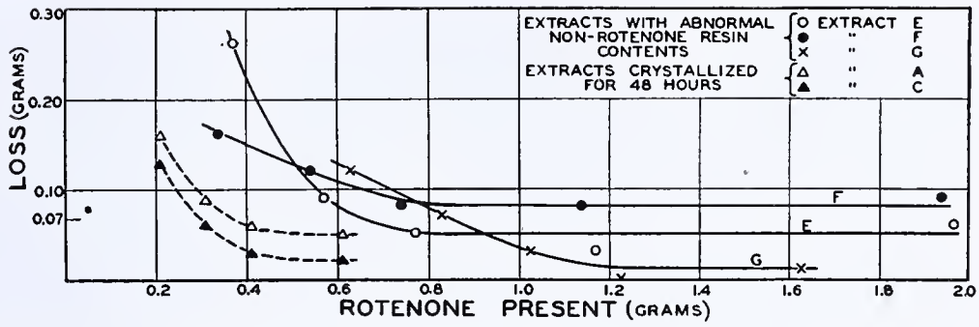

Figure 2. Relation between Weight of Rotenone Known to Be Present in Extracts of Derris and Cube and Weight Lost on Crystallization from Carbon Tetrachloride

Extracts of abnormal rotenone content, and extracts crystallized for longer periods

Results with a Longer Crystallization Period. There remains the question as to whether these results are a consequence of retarded crystallization—in other words, whether an extract would crystallize quantitatively to the solubility point at a lower rotenone content if given more time. To demonstrate this, aliquots of extracts *A* and *C* were allowed to crystallize at 0° C. for 48 hours, instead of for the usual overnight period. As seen in Figure 2, complete crystallization to a value approximately equal to the solubility was obtained here with smaller amounts of rotenone.

Results with Sumatra-Type Resins. Cahn and Boam (*2*) have stated that certain derris extracts in which no rotenone is obtained by ordinary crystallization are found to contain some rotenone when rotenone is added prior to crystallization. They have called these "Sumatra-type" resins or extracts and have designated the rotenone so obtained as "hidden" rotenone. Two samples of derris root giving no rotenone by the old method of crystallization (using no added rotenone), one known to be of Sumatra origin, were selected and extracts were prepared. Aliquots were taken and rotenone was added as in the foregoing tests, although no preliminary crystallization had been given the extracts. Here the amount of rotenone lost decreased with increasing amounts of rotenone added until a constant loss was attained. Since the rotenone content of these extracts was unknown, the constant loss was assumed to be equal to the solubility loss. On this basis both extracts apparently contained small proportions of rotenone (less than 0.5 per cent). The losses obtained by the recalculation were similar to those from the normal extracts tested, as shown in Figure 3, where extract *H* is that of the root of Sumatra origin and extract *I* is that of the other low-rotenone root.

The possibility still remained,

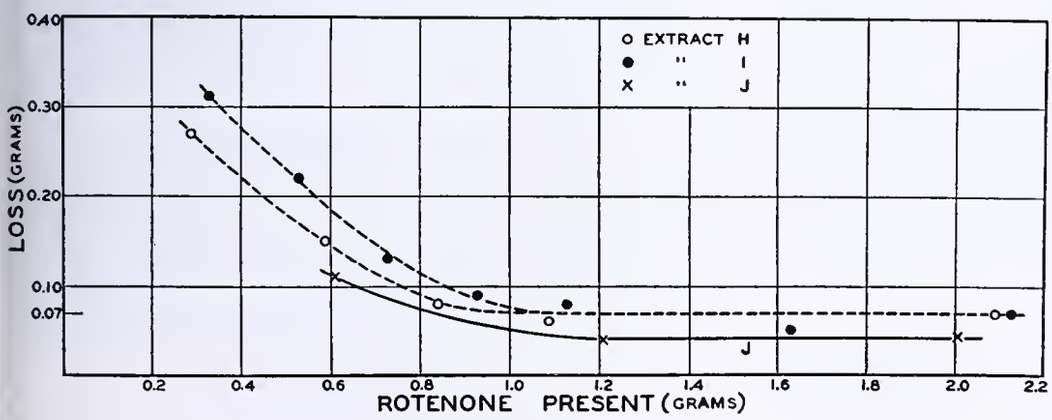

Figure 3. Relation between Weight of Rotenone Known to Be Present in Sumatra-Type Extracts of Derris and Weight Lost on Crystallization from Carbon Tetrachloride

however, that these Sumatra-type resins might be exerting a solvent effect—in other words, that at high rotenone content the constant loss might be greater than the solubility loss instead of equal to it as was assumed. Hence an extract of the root of Sumatra origin was subjected to the preliminary crystallization, as were extracts *A*, *B*, *C*, etc. Here it was necessary to add pure rotenone to be certain of quantitative crystallization. The amounts added were in excess of that judged necessary both by the Cahn and Boam "hidden" rotenone test and the writer's findings. An extract was thus obtained of known rotenone content (extract *J*) to which various quantities of rotenone were added, and the losses were determined as before. At about 1 gram of rotenone and over the loss was constant and approximately equal to the solubility loss, showing these resins to be similar to ordinary derris resins in their effect on rotenone crystallization. It is believed, therefore, that the "hidden" rotenone described by Cahn and Boam is only a result of the retarded crystallization obtained with any extract of very low rotenone content and that the addition of rotenone merely hastens the crystallization as has already been pointed out.

Accuracy of Cahn and Boam Method. Although no attempt was made to make a careful study of the accuracy of the Cahn and Boam method of crystallization, a few aliquots of extracts *A*, *B*, *C*, and *D* with added rotenone were crystallized by this procedure. In this method the dry extract was dissolved in carbon tetrachloride at the rate of 1 gram in 2 cc. of solvent (5 to 10 grams of resin being used) and set aside for crystallization at room temperature overnight. Here the loss was approximately equal to the solubility in the amount of solvent used when 0.8 to 1.0 gram or more of rotenone was present, and increased with smaller amounts of added rotenone. The greater proportion of resin to solvent used in this method results in a definitely less pure solvate, and consequently a slightly less pure product, than is obtained when a larger proportion of solvent is used. The consequent low fluidity of the crystalline mixture renders filtration and washing difficult. For these reasons the present method is preferred, even though the Cahn and Boam procedure may be as accurate.

General Discussion of Accuracy. Of the possible means of overcoming or accounting for the loss in crystallization of low-rotenone extracts, the addition of sufficient rotenone to bring the total amount present into the region of quantitative crystallization has been chosen as the least time-consuming and most accurate. After a little experience the analyst can readily judge at the time crystallization first occurs whether sufficient rotenone will separate to bring the final result above the desired value. Where the proportion of nonrotenone resins is not too great, it is frequently possible to increase the size of the sample to give the proper amount of rotenone in the extract.

In the case of normal samples of derris and cube (about 4 per cent rotenone) treatment of the whole extract, before crystallization, with aqueous alkali and removal of the alkali-soluble material did not increase the yield or purity of the solvate. Martin and Tattersfield (*5*) have recently found that separation of the alkali-soluble material from extracts of Sumatra-type derris roots does materially hasten crystallization. They believe, however, as does the writer, that a similar result is obtained when pure rotenone is added. The latter procedure seems to be the simpler method of assuring complete crystallization.

From the results shown in Figures 1, 2, and 3 it is possible to estimate the accuracy of the crystallization method adopted through a range of about 5 to 20 per cent of nonrotenone resins. For the eight extracts of known rotenone content that were crystallized overnight, when at least 1 gram of rotenone was present the loss ranged from 0.01 to 0.08 gram. After the correction had been made for solubility as specified, the results ranged from 0.06 gram too high to 0.01 gram too low. With one exception the range was from +0.03 to −0.01 gram. In view of the precision found for replicate results on a sample of derris root (standard deviation = ±0.013 gram), these differences cannot be considered significant. Hence on these extracts the method was accurate to within the limits of the precision.

The unusually small loss (high final result) on extract *G*, in which there was a large proportion of nonrotenone extractives, may be significant. Where the proportion of other extractives is high, sufficient impurity may be carried through to the final stage of "pure" rotenone to give slightly high results.

Because of the widely varying composition of different samples of derris and cube root, no general estimate can be made of the accuracy of the method. It is still far from the accuracy desired in most analytical procedures, but there seems no possibility of greatly improving a method that depends entirely on crystallization.

Summary and Conclusions

A modified procedure for the crystallization of rotenone–carbon tetrachloride solvate from extracts of derris and cube roots is proposed in which the author's original method has been improved from the standpoints of accuracy and speed.

Crystallization was found to be retarded by the nonrotenone portion of the extract. A test for the purity of the solvate is given. The purity has been found to depend principally upon the proportion of rotenone present and upon the proportion of solvent used in crystallization.

Accurate results by this crystallization method were obtained only when the rotenone present was equivalent to at least 4 per cent of the root or, in lieu of this, when sufficient rotenone was added, or a sufficiently large sample taken, to bring the amount present during crystallization above this value. A determination of the precision of replicate results on one sample of derris with about this rotenone content showed a standard deviation of ±0.05 per cent. In a study of the accuracy eight extracts, containing known amounts of rotenone in the range of most accurate results, gave average values which in view of the precision were not significantly different from the actual rotenone content. In other words, results for rotenone in the region of 4 per cent should only be quoted to about 0.1 per cent.

It is probable that the nonrotenone portion of the extract only exerts a retarding action on the crystallization and has little or no actual solvent effect on the rotenone. The so-called Sumatra-type derris extracts show no unusual retarding action and no apparent solvent effect, indicating the "hidden" rotenone of Cahn and Boam to be a result of retarded crystallization similar to that found in other extracts of low rotenone content.

Literature Cited

(1) Beach, D. C., *Soap*, **12**, No. 7, 109, 111–12 (1936).
(2) Cahn, R. S., and Boam, J. J., *J. Soc. Chem. Ind.*, **54**, 37–42T (1935).
(3) Danckwortt, P. W., and Budde, H., *Deut. Tierärztl. Wochschr.*, No. **43**, 677 (1933).
(4) Jones, H. A., Ind. Eng. Chem., Anal. Ed., **5**, 23–6 (1933).
(5) Martin, J. T., and Tattersfield, F., *Ann. Applied Biol.*, **23**, 880–98 (1936).
(6) Rowaan, P. A., *Chem. Weekblad*, **32**, 291–5 (1935).

Received March 8, 1937.

Measurement of Particle-Size Distribution by Optical Methods

Effect of Light of Different Wave Lengths

H. E. SCHWEYER, The Barber Company, Inc., Maurer, N. J.

A brief study was made of the effect of light of different wave lengths upon the turbidity-concentration relation of aqueous suspensions of white and colored mineral powders using the Wagner turbidimeter. It was found that yellow and red light gave about the same slope as white light for a plot of concentration against turbidity, but that green light yielded a curve that diverged from white light in the region of low concentration. This indicates that the suspensions tend to absorb the shorter wave lengths, thereby affecting the output of the photoelectric cell with an attendant influence on the particle-size distribution as measured by this method.

OPTICAL methods for the determination of particle-size distribution offer advantages over other methods in that they are rapid and require a comparatively simple technic, but they have certain limitations which must be considered in any accurate evaluation. A convenient optical method has been developed by Wagner (*4*) for use in the cement industry. This instrument has been critically studied and the technic modified by Traxler and Baum (*3*), who found discrepancies between the size distribution in fine mineral powders as measured by an air elutriator (*2*) and by the turbidimeter method. In an effort to explain the differences obtained by the two methods, the present investigation was carried out to determine what effect using light of different wave lengths would have on the turbidity-concentration relation of aqueous suspensions.

TABLE I. CHARACTERISTICS OF FILTERS

Wratten Filter	Color	Total Transmission	Principal Wave-Length Range of Gelatin[a]
		%	*Millimicrons*
No. 58	Green	23	490–580
No. 22	Yellow	47	560–700
No. 25	Red	22	590–700

[a] Range gives wave lengths for which the filter shows greater than 10 per cent transmission.

For this purpose a number of Wratten colored gelatin filters were made up by placing the gelatin between two plates of glass. The principal characteristics of these filters are given in Table I. While these filters do not transmit true monochromatic light, they do transmit light of varying wave lengths which are somewhat different from white light and each other.

Procedure

In any method for particle-size measurement it is very important that the finely divided solid be completely dispersed in the suspending medium. Traxler and Baum (*3*) made an exhaustive study of this phase of the technic used with the Wagner turbidimeter. They found, with water as the suspending medium, that a 0.0125 per cent solution of saponin or a 0.05 per cent solution of "S" brand sodium silicate gave the most satisfactory results. The rotating brush supplied with the turbidimeter has the undesirable feature of producing a vortex which entrains air in the suspension. To overcome this difficulty Traxler and Baum (*3*) designed a small high-speed mixer, consisting of a rotor and stator with baffle plates, which is placed below the surface of the dispersing solution.

TABLE II. TURBIDITY-CONCENTRATION DATA FOR VARIOUS MINERALS USING DIFFERENT COLORED LIGHT

Powder	Concentration W	Turbidity, $\frac{2 - \log I_d}{W}$			
		White	Yellow	Red	Green
	G./l.				
White silica	3.0	0.58	0.56	0.56	0.59
	1.8	0.80	0.83	0.81	0.83
	1.2	0.94	0.97	0.94	1.03
	0.90	1.05	1.05	1.06	1.10
White limestone	2.5	0.72	0.70	0.70	0.72
	1.5	0.93	0.93	0.94	0.99
	1.0	1.09	1.08	1.07	1.18
	0.75	1.17	1.16	1.16	1.27
Gray trap rock	2.5	1.16	1.18	1.18	0.97
	1.5	1.07	1.03	1.06	1.10
	1.0	1.13	1.16	1.14	1.22
	0.75	1.12	1.11	1.13	1.26
Green slate	2.0	1.00	1.45	1.45	1.25
	1.0	1.52	1.52	1.55	1.62
	0.80	1.70	1.65	1.68	1.86
	0.60	1.79	1.80	1.80	1.96
Red slate	0.60	2.32	2.24	2.22	2.66
	0.30	2.58	2.59	2.58	3.02
	0.20	2.73	2.71	2.71	3.20
	0.18	2.78	2.72	2.81	3.36
	0.15	..	..	2.92	..
	0.10	..	..	3.30	..
Black slate	0.87	1.62	1.67	1.67	1.77
	0.75	1.62	1.69	1.71	1.84
	0.30	1.68	1.72	1.74	2.21
	0.26	1.74	1.87	1.92	2.13

In the present study powdered minerals of different colors were analyzed by the Wagner turbidimeter, using white and colored light. Aqueous saponin was used as the dispersing solution. The minerals were dispersed with the improved stirrer for 5 minutes, after which the dispersions were agitated by hand for 1 minute, and the cell was immediately placed on the shelf of the turbidimeter. Successive readings were obtained by adding a known quantity of water to the original concentration, thereby making successively more dilute suspensions. For colored light the technic was varied by placing the filter in the light beam behind the screen and in front of the guard, so that only colored light affected the photoelectric cell. The I_0 reading was readjusted for each filter, so that the varying sensitivity of the photoelectric cell to light of different wave lengths would not affect the readings. The data obtained are given in Table II.

Discussion

The results indicate that the turbidity-concentration relation is unaffected by the longer wave lengths, since the red and yellow filters gave practically the same results as white light except for one concentration of the green slate and one concentration of the red slate. However, when green light is used the results are definitely different from white light, and

this difference is more pronounced with the colored powders. The data for the white limestone are plotted in Figure 1 to illustrate the differences. The figure indicates that in the region of low concentration the suspension shows a higher turbidity with green light than with the light of other wave lengths.

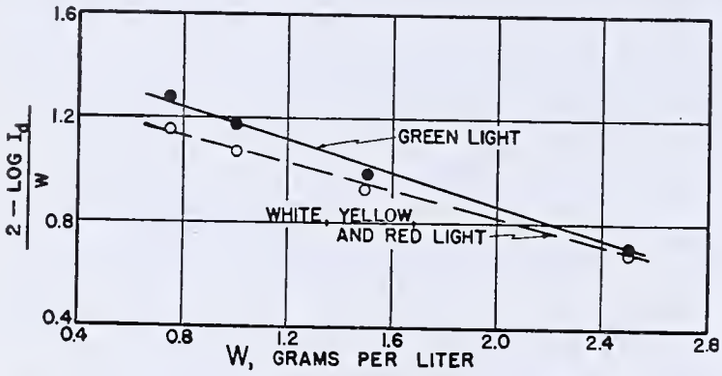

FIGURE 1. TURBIDITY CONCENTRATION CURVES FOR WHITE LIMESTONE

The difference in the slope of the turbidity-concentration curves appears to be caused by selective absorption of the shorter wave lengths of light by the suspended powders, as was suggested by Traxler and Baum (*3*). The green light was the shortest wave length used and it showed this effect to a significant degree. Furthermore, this selective absorption is most pronounced with the red slate, which might be expected since this mineral would tend to absorb the shorter wave lengths. If a blue filter had been used, still greater differences probably would have been obtained. An attempt was made to use a blue Wratten filter (No. 49), but the total transmission (0.5 per cent) was too low for use with the light source in the turbidimeter.

Richardson (*1*) in his work found that color is important in studies of suspensions. He used a photoelectric cell in his apparatus for determining the size distribution of clays, and stated that the absorption of light is independent of color for particles larger than one micron, but that for smaller particles the absorption is strongly dependent upon color. The photoelectric cell varies in sensitivity to different colored light and any selective absorption that occurs will affect the output of the cell, whether that absorption is caused by very fine or by colored particles. It may be possible, however, by using monochromatic light of the proper wave length, to eliminate this selective absorption and thereby obtain accurate results for very fine mineral powders with a turbidimeter type of instrument.

Richardson (*1*) also makes the rather general statement that particles smaller than one micron would tend to be held in permanent suspension by Brownian movement. This would affect the results obtained by any method utilizing rate of settling for determining particle-size distribution, especially where the distribution is calculated from the surface area as in the Wagner method. Since the major part of the surface area of a pulverized powder is dependent on the number of very small particles, Brownian movement would probably seriously affect the results on fine clays. Although pulverized powders would be less seriously affected, Brownian movement should always be considered when using the Wagner turbidimeter.

Conclusion

A number of variables affect the turbidity of a suspension as measured by optical methods. The selective absorption of light is perhaps one of the most important, and a complete understanding of this variable will do much toward simplifying the use and technic of optical methods in measuring particle-size distribution.

Acknowledgment

The author wishes to express his gratitude for the assistance given by R. N. Traxler, under whose direction this study was made.

Literature Cited

(1) Richardson, E. G., *J. Sci. Instruments*, 13, 229–33 (1936).
(2) Roller, P. S., U. S. Bur. Mines, *Tech. Paper* 490 (1931).
(3) Traxler, R. N., and Baum, L. A. H., *Proc. Am. Soc. Testing Materials*, 35, II, 457–71 (1935).
(4) Wagner, L. A., *Ibid.*, 33, II, 553–70 (1933).

RECEIVED February 25, 1937.

A Simplified Sealed Stirrer

LIONEL JOSEPH
Washington University, St. Louis, Mo.

A MODIFICATION of the sealed stirrer described by Powell (*1*) has been used in this laboratory for some time and has been found exceedingly useful, particularly in stirring sludges. Some difficulty was experienced in assembling the type of stirrer described, so that modifications were introduced to make the assembly of the stirrer simpler without cutting down its efficiency.

The glass bearing consists of a piece of 7-mm. tubing, 25 mm. long, spread at one end to an outside diameter of 15 mm., and inserted in the top of the cork. A hole 15 mm. in diameter is bored halfway through from the bottom of the cork. The seal is made by a short piece of rubber tubing which fits over the glass rod and makes a tight joint with the larger-bore rubber tubing attached to the glass bearing. With this arrangement it has been found unnecessary to clamp the stopper as described by Powell.

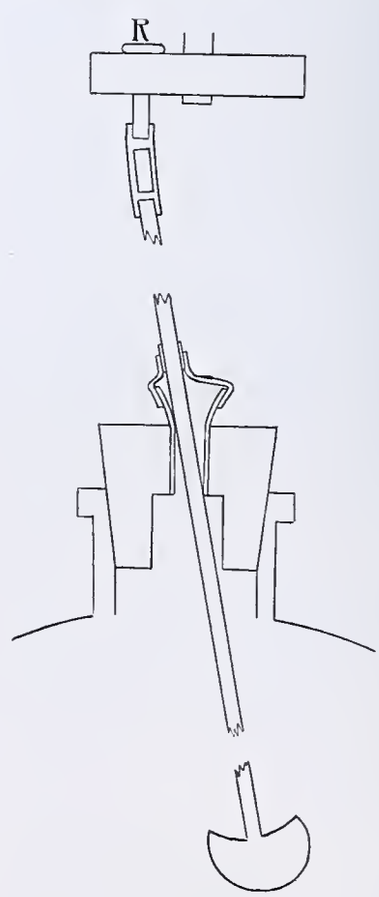

In place of the No. 12 rubber stopper the author has used a cork about 7 cm. in diameter and 2 cm. thick, through which is drilled a hole large enough to give plenty of play to rod *R*. Smoother operation may be obtained by drilling the hole on a slant and inserting a glass sleeve. The distance of the hole from the center of the cork may vary from 15 to 25 mm., depending upon the size of the flask used and the amount of sweep desired.

Literature Cited

(1) Powell, L. S., IND. ENG. CHEM., Anal. Ed., 8, 488 (1936).

RECEIVED February 26, 1937.

Determination of Tar Acids and Bases by Extraction Methods

C. H. FISHER AND ABNER EISNER, Pittsburgh Experiment Station, U. S. Bureau of Mines, Pittsburgh, Pa.

A critical survey is presented of extraction methods for tar-acid and -base determination. The various procedures are discussed in connection with studies (presented in an earlier paper) of the important variables involved. Certain modifications which increase the accuracy of the Bureau of Mines method are recommended.

MANY methods of analyzing tar oils for their tar-acid and -base content have been employed in connection with both academic and industrial investigations. Most of these analytical procedures are based on the diminution in volume caused by extraction with alkali and mineral acids (contraction method), although other methods have been employed (*14, 19, 20, 29, 30*). In many instances the adoption of an analytical method was not preceded by an adequate study, and as a consequence the literature on this subject is conspicuous for its contradictory claims and recommendations. It has been shown in the case of certain synthetic solutions (*6, 17*) that large errors may result if the analysis is carried out by simple extraction with alkali and mineral acids.

It was the purpose of the present work to study and compare several modifications of the contraction method and to show under what general conditions tar acids and bases can be extracted accurately. Synthetic solutions, coal-tar oils, and hydrogenated coal distillates were used in this connection, and methods of determining tar acids as phenols and carboxylic acids were investigated. Methods that include washing the alkaline and acid extracts with organic solvents were not studied, since such methods are wasteful of time and subject to errors of prolonged manipulation. Furthermore, washing the aqueous extracts with organic solvents fails to accomplish the desired end, since, for example, an organic solvent removes phenols as well as nonacidic materials from alkaline solutions.

Materials and Procedure

The synthetic solutions studied were prepared from good grade chemicals. Pure toluene was used as the hydrocarbon solvent, and the cresol ("tricresol") was a mixture of isomers.

The extractions were carried out in funnels (*10, 31*) graduated to 100 cc. in 0.2-cc. subdivisions. About 1 hour was allowed to elapse between agitation of the oil (100-cc. samples) with aqueous solutions and observation of volume changes.

Alkali Concentration

There is considerable disagreement concerning the concentration of alkali best suited for the accurate extraction of tar acids, and a number of alkaline reagents have been recommended. It appears certain that "maximum extractions" are obtained with rather concentrated alkali (*2, 23, 25*). However, it is generally recognized that the alkaline extracts thus obtained contain considerable quantities of nonacidic material, owing to the solvent power (*6, 26*) of alkali-phenol solutions. In many instances nonacidic material has been removed from the alkaline layer by washing with organic solvents. Probably 10 per cent sodium hydroxide (*5, 7, 9, 15, 28*) is most frequently employed as the alkaline reagent, although 5 (*18, 21*), 15 (*11, 12*), 20 (*1, 3, 25*), and 30 per cent (*24*) have been used. It has been claimed (*21*) that the addition of sodium chloride to 10 per cent sodium hydroxide tends to prevent the dissolution of nonphenolic or nonacidic substances.

In the present work the effect of alkali concentration was studied in one series of experiments by extracting a standard amine-toluene solution (100-cc. portions) with 50-cc. portions of sodium hydroxide solution. All the sodium hydroxide solutions examined (5, 10, 20, and 30 per cent) failed to dissolve appreciable quantities of the amine-toluene solution, although all the amines present are fairly soluble in water. The potent influence of sodium hydroxide in decreasing the solubility of amines in water is shown well by the data in Table I. Although even 5 per cent alkali dissolved only negligible quantities of the amine-toluene solution, washing with three 50-cc. portions of distilled water caused a total diminution in volume of 2.5 to 3.0 cc.

	Cc.	%
Pyridine	12	1.85
Isoquinoline	32	4.9
Aniline	56	8.6
Toluene	550	84.65

The results in Table I indicate that, excluding factors other than the solubility of amines in aqueous alkali, almost any concentration of sodium hydroxide would be suitable for the analytical extraction of tar acids.

TABLE I. EXTRACTION OF AMINE-TOLUENE SOLUTION WITH ALKALI

Extracted with 50-Cc. Portions of	Volume Changes of Toluene Layer 1st 50 cc.	2nd 50 cc.	3rd 50 cc.	4th 50 cc.	1st 150 cc.
	Cc.	*Cc.*	*Cc.*	*Cc.*	*Cc.*
5% NaOH	0.0	−0.1	−0.2	...	−0.3
	0.0	−0.3	−0.1	...	−0.4
10% NaOH	0.0	0.0	−0.2	−0.2	−0.2
	−0.1	−0.1	−0.3	−0.2	−0.5
20% NaOH	+0.2	+0.1	−0.1	−0.1	+0.2
	+0.1	+0.1	0.0	−0.1	+0.2
30% NaOH	0.0	0.0	+0.1	−0.1	+0.1
	+0.1	0.0	−0.1	0.0	0.0
20% NaOH saturated with NaCl	+0.1	0.0	−0.1	−0.1	0.0
	+0.1	0.0	0.0	−0.1	+0.1
Water saturated with NaCl	+0.1	−0.1	−0.5	−0.3	−0.5
	+0.2	−0.1	−0.1	−0.3	0.0
Water	−0.8	−1.2	−1.1	−0.8	−3.1
	−0.8	−0.9	−0.9	−0.8	−2.6

In studying the solubility of amines in alkaline solutions of sodium phenolates, the same amine-toluene solution used previously was washed several times in succession with 50-cc. portions of aqueous solutions containing various amounts of sodium hydroxide and cresol. The alkali-cresol solutions were prepared by adding certain quantities of cresol (7.5, 15, 22.5, 30, 37.5, and 45 cc. to each 100 cc. of sodium hydroxide) to several different concentrations (5, 10, 15, 20, and 30 per cent) of alkali. The results (Table II and Figure 1) indicate that the solubility of amines in alkali-cresol solutions is directly proportional to the concentration of alkali, and that large amounts of amines are extracted where the concentrations of alkali and cresol are high.

The effect of varying the cresol concentration is also shown by the data in Table II and Figure 1. It is readily apparent that the volume losses of the toluene solution were directly proportional to the concentration of cresol where sufficient alkali was present to neutralize the cresol. Where the alkali present was not sufficient to react with the cresol the volume of the amine-toluene layer increased, because of the absorption of excess or "free" cresol. Because of the solvent power of concentrated alkali-phenol solutions for amines, concentrated alkali should not be used to extract tar acids where, as in analytical procedures, the simultaneous removal of amines is not desired.

Acid Reagent

The determination of tar bases is omitted in some tar-oil analyses, and consequently less is known about the efficacy of different acid reagents in the extraction of tar bases. Skirrow and Binmore (*27*) have observed that 2 *N* sulfuric acid extracted pyridine from pyridine-benzene solutions more efficiently than 9.63 *N* sulfuric acid. Dilute sulfuric acid appears to be the reagent (*16*) generally used to extract tar bases.

A number of experiments were carried out to see if phenol, as a representative of the tar acids, could be extracted in appreciable quantities by dilute mineral acids. Approximately 100 cc. of a phenol-toluene solution (80 grams of phenol in 500 cc. of toluene) were washed in succession with four 50-cc. portions of various aqueous solutions, and the acid solutions causing little change in volume of the phenol-toluene layer were considered as possible acid reagents. The presence of inorganic salts, especially sodium chloride, was found, as anticipated, to retard the removal of phenol from the toluene layer. From the data in Table III and the fact that sodium chloride would not be expected to depress the solubility of amine sulfates as much as inorganic sulfates, it appears that the most suitable reagent is 20 per cent sulfuric acid containing sodium chloride.

The following experiment, which affords a more direct comparison of hydrochloric acid and the sulfuric acid–sodium chloride solution, has shown that the latter reagent is preferable: Washing 100 cc. of a 15 per cent by volume cresol-toluene solution with three 50-cc. portions of a pyridine–hydrochloric acid solution (10 cc. of pyridine added to 100 cc. of 20 per cent acid) caused the toluene layer to suffer a total volume loss of 2.6 cc. Under the same conditions the toluene layer gained 0.4 cc. in volume when a pyridine–sulfuric acid solution (10 cc. of amine added to 100 cc. of 20 per cent sulfuric acid saturated with sodium chloride) was used.

A few experiments, which were carried out to ascertain the importance of acid concentration and the presence of amine salts on the distribution of phenols between the hydrocarbon and aqueous layers, have already been described (*6*). It was shown that, although the presence of aniline increased the solubility of cresol in the aqueous layer, the concentration of acid had little effect. The presence of amine salts in the aqueous layer probably has little influence on the accuracy of analytical procedures, because tar bases usually are present in relatively small amounts.

To examine the possibility that the sulfuric acid reagent would cause olefins to polymerize or to react with phenols, several reactive olefins (*d*-limonene, styrene, and pinene) were treated with 20 per cent sulfuric acid saturated with sodium chloride. There was no loss in volume of the olefins or any indication of reaction, and on distillation the hydrocarbons came over at their respective boiling points.

A comparison of the first two columns of Table II with those of Table III shows that phenol-toluene solutions absorb considerably more water than the amine-toluene solutions under the conditions employed.

Table II. Extraction of Amine-Toluene Solution with Alkali-Cresol Solutions of Various Concentrations

Concentration of NaOH	Cresol Added	Volume Changes of Toluene Layer 1st 50 cc.	2nd 50 cc.	3rd 50 cc.	4th 50 cc.	1st 150 cc.
%	*Cc./100 cc.*	*Cc.*	*Cc.*	*Cc.*	*Cc.*	*Cc.*
5	7.5	+0.1	−0.4	−0.3	−0.2	−0.6
		0.0	−0.4	−0.4	−0.3	−0.8
10	7.5	+0.1	−0.3	−0.3	−0.4	−0.5
		+0.1	−0.2	−0.3	−0.4	−0.4
15	7.5	+0.1	−0.3	−0.2	...	−0.4
		+0.1	−0.4	−0.2	...	−0.5
20	7.5	−0.4	−0.7	−0.9	−1.0	−2.0
		−0.5	−0.5	−0.9	−0.7	−1.9
30	7.5	−3.0	−3.3	−2.8	...	−9.1
		−2.8	−3.2	−2.9	...	−8.9
5	15	+0.9	+0.2	0.0	−0.1	+1.1
		+0.9	+0.1	0.0	−0.1	+1.0
10	15	−0.3	−0.7	−0.7	−0.6	−1.7
		−0.3	−0.6	−0.7	−0.6	−1.6
15	15	−0.8	−0.9	−1.0	...	−2.7
		−0.8	−1.0	−1.1	...	−2.9
20	15	−2.0	−2.0	−1.6	−1.5	−5.6
		−1.9	−1.4	−1.7	−1.3	−5.0
30	15	−5.1	−5.2	−3.7	−2.7	−14.0
		−5.2	−4.9	−3.4	−3.3	−13.5
5	22.5	+3.1	+2.6	+2.4	...	+8.1
10	22.5	−0.4	−1.0	−1.2	−1.0	−2.6
		−0.3	−1.0	−0.9	−1.1	−2.2
15	22.5	−1.8	−2.1	−1.7	...	−5.6
		−2.0	−1.9	−1.7	...	−5.6
20	22.5	−2.6	−2.3	−2.1	−1.8	−7.0
		−2.8	−2.6	−2.3	−2.0	−7.7
30	22.5	−6.3	−5.1	−4.3	−2.8	−15.7
		−6.4	−5.3	−4.1	−3.0	−15.8
5	30	+5.5	+7.0	+4.3	...	+16.8
10	30	−0.8	−1.4	−1.6	−1.3	−3.8
		−0.8	−1.4	−1.6	−1.3	−3.8
15	30	−2.1	−2.3	−1.9	...	−6.3
20	30	−3.7	−3.4	−2.5	−2.1	−9.6
		−3.8	−3.1	−2.7	−2.3	−9.6
5	37.5	+8.1	+7.4	+7.5	...	+23.0
10	37.5	+1.9	+1.7	+1.6	...	+5.2
		+2.0	+1.4	+1.6	...	+5.0
15	37.5	−2.8	−2.7	−2.2	...	−7.7
20	37.5	−4.7	−3.9	−2.8	−2.4	−11.4
		−4.8	−3.9	−3.0	−2.3	−11.7
10	45	+4.2	+4.3	+2.7	...	+11.2
		+4.4	+4.1	+3.0	...	+11.5
15	45	−2.8	−3.0	−2.5	...	−8.3
20	45	−5.9	−4.5	−3.3	−2.7	−13.7
		−6.4	−4.6	−3.4	−2.3	−14.4

Table III. Extraction of Phenol-Toluene Solution with Various Aqueous Solutions

Extracted with 50-Cc. Portions of	Volume Changes of Toluene Layer 1st 50 cc.	2nd 50 cc.	3rd 50 cc.	4th 50 cc.	1st 150 cc.
	Cc.	*Cc.*	*Cc.*	*Cc.*	*Cc.*
20% H_2SO_4	+0.2	−0.8	−0.8	−0.7	−1.4
	+0.2	−0.8	−0.8	−0.8	−1.4
20% H_2SO_4 saturated with cryst. K_2SO_4	+0.3	−0.5	−0.7	−0.4	−0.9
	+0.5	−0.5	−0.4	−0.2	−0.4
20% H_2SO_4 saturated with anhyd. Na_2SO_4	+0.6	−0.2	−0.3	−0.1	+0.1
	+0.8	−0.2	−0.1	−0.3	+0.5
20% H_2SO_4 saturated with NaCl	+0.3	−0.1	−0.3	0.0	−0.1
	+0.5	−0.3	−0.3	−0.5	−0.1
20% H_2SO_4 saturated with NaCl and K_2SO_4	+0.7	−0.1	−0.2	−0.3	+0.4
	+0.4	−0.2	−0.3	−0.1	+0.1
20% HCl	−0.3	−0.9	−0.9	−0.7	−2.1
	−0.6	−0.9	−0.8	−1.0	−2.3
20% HCl saturated with NaCl	−0.2	−0.8	−0.4	−0.6	−1.4
	0.0	−0.9	−0.7	−1.0	−1.6
Water	−0.4	−1.7	...	...	...
	−0.6	−1.4	...	...	...
Water saturated with K_2SO_4	−0.1	−1.3	−1.2	−1.3	−2.6
	−0.2	−1.3	−1.1	−1.0	−2.6
Water saturated with NaCl	+0.4	−0.4	−0.3	−0.4	−0.3
	+0.5	−0.2	−0.2	−0.6	+0.1

Bureau of Mines Method

After analyzing several synthetic mixtures under different conditions with various acid and alkaline reagents, Kester and Rockenbach (*17*) adopted the following method (*5*) for determining tar acids and bases: The tar oil (100 cc.) is extracted with acid and alkali in the following order: (1) three 50-cc. portions of 20 per cent sulfuric acid saturated with potassium sulfate, (2) three 50-cc. portions of 10 per cent sodium hydroxide, and (3) three 50-cc. portions of 20 per cent sulfuric acid saturated with potassium sulfate. This method, which employs reagents conforming to the requirements defined above (Tables II and III), has been used

repeatedly with good results, and is interesting in that the unusual procedure of extracting tar bases first is employed.

Numerous analyses of coal-tar distillates by the Bureau of Mines method have confirmed (communication from J. D. Davis and L. P. Rockenbach) the claim of Hatcher and Skirrow (*13*), which is in agreement with the experience of coal-tar workers, that tar bases cannot be extracted conveniently in the presence of tar acids. Since mineral acids bring about only a partial extraction of tar bases in the presence of tar acids, it seemed likely that washing with acid, then alkali, and finally with acid (as in the Bureau of Mines method) would separate the tar bases roughly into two types: (1) amines having distribution ratios favorable to the acid layer and (2) amines with a distribution ratio more favorable to the hydrocarbon-phenol layer. The ratio between quantities extracted in the presence and absence of tar acids should depend on the composition of the tar oil and thus be a characteristic property. These ratios have been calculated for several tar oils; the oils from low-temperature tars yielded ratios ranging between zero and 0.1, while the high-temperature tar oil (see Table V) gave a higher ratio (0.54). As might be expected from their composition, the synthetic solutions described in Table V gave still higher ratios (1.2 to 1.4). Since high-temperature tar oils contain larger proportions of low-molecular-weight amines than oils from low-temperature tars it follows that, considering the amine ratios given above, more of the low-molecular-weight amines are removed in the first acid washings—i. e., before the tar acids are removed. Experimental evidence that supports this view has been given elsewhere (*6*). Cheng and Morgan (*2*) have shown that chiefly low-molecular-weight phenols are removed where tar acids are incompletely extracted from tar oils.

In view of the results obtained by extracting amine-toluene solutions with sodium hydroxide containing cresol (see Table II), it might be expected that oils containing high concentrations of tar acids and bases could not be analyzed accurately by extraction methods. To find the maximum concentration amenable to accurate analysis by contraction methods, several synthetic mixtures were extracted by a modification of the Bureau of Mines method. Uneven portions (100, 35, and 15 cc.) of the reagents were employed, and sodium chloride was used instead of potassium sulfate to saturate the 20 per cent sulfuric acid. The synthetic solutions were prepared by mixing known volumes of an amine mixture (equal parts by volume of pyridine, quinoline, isoquinoline, and aniline), cresol, and toluene. The results of these analyses, given in Table IV, show that the solutions containing large amounts of phenols and amines gave high results for phenols and low results for amines. However, fairly accurate data were obtained with the synthetic mixtures having the concentration of amines and phenols usually found in coal tars. In view of the fact that the solutions of low amine and phenol content gave satisfactory analyses, it might be expected that dilution of coal oils before extraction would be beneficial. (Dilution of oils of high tar-acid and -base content to obtain improved analyses has been suggested by Hill (*15*, and by Fridli and Raffay, *8*.)

It appears that the ratio of amines to phenols, as well as total content, is important. As an example, where the ratio (amines to phenols) was 1 to 1 good results were obtained with a total amine-phenol content of 40 per cent, but with a ratio of 1 to 5 errors appeared with a total amine-phenol content as low as 25 per cent.

It will be noted (Table IV) that in most cases low results were obtained for the neutral oil. This probably indicates that usually small, and in some cases considerable, amounts of the neutral oil also were extracted.

Comparison of Extraction Methods

Using both synthetic solutions and coal-tar distillates, a comparison was made of the Bureau of Mines method and several other typical extraction procedures. In view of the generally satisfactory results obtained previously with the Bureau of Mines method (Table IV), the data obtained with coal oils by this procedure (Table V) were considered fairly accurate, and hence of some value as a standard for evaluating the other methods. The "liberation method" of Morgan and Meighan (*22*) gave more accurate results for two synthetic solutions (Table V) and was therefore employed to obtain the true tar-acid content of the coal oils.

The several oils and synthetic mixtures described in Table V were analyzed as follows:

1. Bureau of Mines method, considered above in some detail.
2. Modified Bureau of Mines method (sodium chloride instead of potassium sulfate in 20 per cent sulfuric acid, and uneven portions of reagents), used previously to obtain the data in Table IV.
3. Essentially the Bureau of Mines method backward. The oil (100 cc.) was extracted with three 50-cc. portions of 10 per cent alkali, and then with three 50-cc. portions of 20 per cent sulfuric acid (saturated with sodium chloride). These alternate

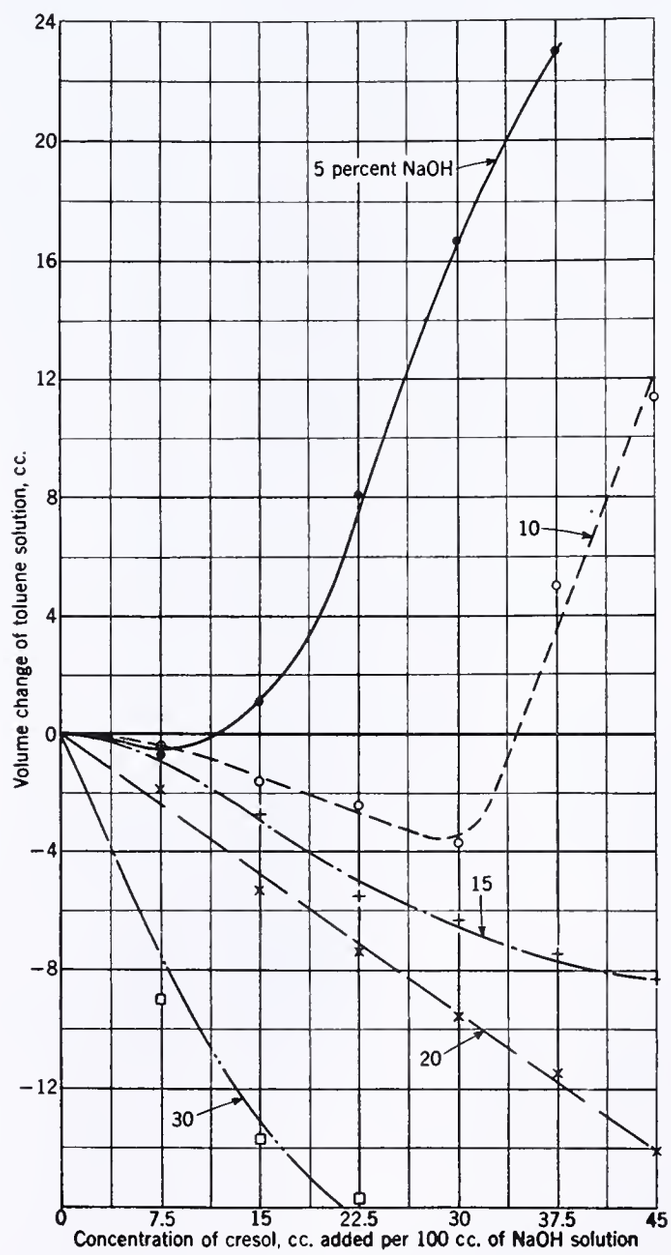

FIGURE 1. AMINES IN TOLUENE WASHED WITH 150 CC. OF ALKALINE-CRESOL SOLUTION

extractions were repeated until all tar acids and bases were removed.

4. A special method based on the use of 5 per cent sodium hydroxide, which, in the presence of sodium phenolates, dissolves smaller quantities of amines and forms worse emulsions than 10 per cent alkali. The following extraction procedure was designed to benefit from the advantages of both concentrations of alkali; the bulk of the phenols was removed with 5 per cent alkali and the last traces of phenols were removed with 10 per cent alkali, which generally causes a good separation of layers. This method gave troublesome emulsions with some tar oils, and hence is of little value.

a, b.	100 cc. of 5 per cent sodium hydroxide
c.	50 cc. of 10 per cent sodium hydroxide
d.	50 cc. of 20 per cent sulfuric acid (sodium chloride)
e, f.	25 cc. of 20 per cent sulfuric acid (sodium chloride)
g.	25 cc. of 10 per cent sodium hydroxide
h.	25 cc. of acid reagent

5. Liberation method. The oil was extracted with 20 per cent alkali, the alkaline extract was acidified, the acidic solution was extracted with benzene, and the benzene washings were diluted to 100 cc. and extracted with 10 per cent sodium hydroxide; the volume loss of the benzene layer indicated the tar-acid content.

6. The volume loss of 100 cc. of tar oil to 20 per cent sodium hydroxide, as carried out in method 5. It was observed in several cases that 20 per cent alkali removed all the tar acids—that is, no further quantities of tar acids could be obtained by removing the tar bases and extracting again with alkali.

In general, the results obtained with the various tar oils (Table V) are consistent with those obtained with synthetic mixtures. As might be expected, the greatest volume losses were caused by washing with 20 per cent sodium hydroxide (method 6), which undoubtedly removed considerable quantities of amines, and probably some of the neutral oil, along with the phenols. The values afforded by the liberation method were lower than those obtained by simple extraction with 10 or 20 per cent alkali; this result was to be anticipated and is in agreement with a generalization made previously by Weiss (*31*).

Methods 1 and 2, differing from each other only in minor details, gave almost identical results in all cases. In view of the good agreement with the values of the liberation method and the results obtained with synthetic solutions, it appears that methods 1 and 2 generally give satisfactory results. It seems likely that in most cases the true value of the tar-acid content lies between the results afforded by methods 1 (or 2) and 5. Methods 1 and 2 generally are preferable to 5 (liberation method) because of their simplicity and the fact that values are obtained for both the tar-acid and -base content. Method 4 was superior to the other procedures with synthetic mixtures, but could not be used conveniently with the tar oils.

In a few cases (data not shown) 5 and 10 per cent sodium hydroxide solutions saturated with sodium chloride were employed in extractions, but appeared to have no advantage over alkali alone.

A number of facts have been established which present a rather clear picture of the Bureau of Mines method and explain the beneficial effect of extracting first with acid. The following interpretation of the Bureau of Mines type of tar-acid and -base analysis is consistent with the data thus far presented in this paper and in an earlier paper (*6*):

Extraction first with acid removes principally the amines of lower molecular weight, and saturates the tar-oil layer with water. (This is partly responsible for the low amine and high phenol values usually obtained.) As indicated above, the amines of higher molecular weight have distribution ratios more favorable to the hydrocarbon-phenol layer, and hence are not removed by acid (*6*). Only negligible quantities of phenols are removed in the acid wash because (1) a suitable acid reagent (20 per cent sulfuric acid saturated with an inorganic salt) is used, (2) relatively small quantities of amines are present, (3) only a portion of the amines present (certain amines of low molecular weight) as salts in acid solution is capable of extracting phenols in appreciable quantities from hydrocarbon solutions, and (4) only the phenols of low molecular weight are easily extracted by acid-amine solutions.

Extraction with alkali in the second stage of the analysis removes the phenols, and probably most of the water absorbed in the first washing. Possibly traces of certain highly alkylated phenols (*4*) (such as thymol and phenols difficultly soluble in alkali) are not extracted. Only small quantities of amines are removed along with the sodium phenolates because (1) moderately dilute alkali is used, (2) only high-molecular-weight amines, sparingly soluble in sodium phenolate solutions, are present, and (3) the amine content, relatively low at the beginning, is lower than its original value. In the third stage of the analysis the remaining amines of high molecular weight are removed easily by mineral acid extraction since phenols are not present. In several cases of the present work a second extraction with alkali, as a fourth stage of the analysis, caused slight diminution in volume, indicating that such a procedure might be necessary in some cases to remove all traces of tar acids.

Where tar oils are extracted first with alkali, practically all the tar acids are removed, since tar bases have little retarding effect. The highly alkylated, weakly acidic phenols are less easily extracted, especially in the presence of tar bases. Con-

Table IV. Analysis of Synthetic Solutions

Amines Calcd.	Amines Found	Phenols Calcd.	Phenols Found	Neutral Oils Calcd.	Neutral Oils Found (Difference)	Ratio of Amines to Phenols
%	%	%	%	%	%	
1	1.4	1	1.6	98	97	1:1
5	4.9	5	4.5	90	90.6	1:1
10	10.4	10	9.4	80	80.2	1:1
15	15.3	15	14.8	70	69.9	1:1
20	20.1	20	20.3	60	59.6	1:1
1	1.6	3	3.1	96	95.3	1:3
5	5.4	15	14.9	80	79.7	1:3
7	6.7	21	20.9	72	72.4	1:3
8	7.9	24	23.8	68	68.3	1:3
9	8.0	27	28.5	64	63.5	1:3
10	8.7	30	31.7	60	59.6	1:3
15	11.7	45	46.3[a]	40	42.0	1:3
1	0.8	5	5.3	94	93.9	1:5
3	2.8	15	15.5	82	81.7	1:5
4	3.7	20	20	76	76.3	1:5
5	4.0	25	26.1	70	69.9	1:5
1	1.1	7	7.4	92	91.5	1:7
3	3.1	21	20.9	76	76.0	1:7
4	3.7	28	28.4	68	67.9	1:7
5	4.3	35	36.3	60	59.4	1:7
3	3.0	27	27.3	70	69.7	1:9
4	2.8	36	37.8	60	59.4	1:9
3	2.5	33	34.4	64	63.1	1:11
4	2.5	44	47.5	52	50	1:11
2	1.8	26	26.8	72	71.4	1:13
3	1.9	39	40.3	58	57.8	1:13
1	0.7	30	30.1	69	69.2	1:30
15	13.5	5	4.3	80	82.2	3:1

[a] The alkali used (150 cc. of 10 per cent sodium hydroxide) was not sufficient to remove all the cresol.

Table V. Comparison of Extraction Methods

Oil Examined	Bureau of Mines Amines	Bureau of Mines Phenols	Modified Bureau of Mines Amines	Modified Bureau of Mines Phenols	Bureau of Mines Backward Amines	Bureau of Mines Backward Phenols	5% NaOH Method Amines	5% NaOH Method Phenols	Liberation Method Phenols	20% NaOH Method Phenols	Amines Ratio[a]
	%	%	%	%	%	%	%	%	%	%	
SM 1[b]	4.3	25.9	4.1	25.8	4.5	26.0	4.7	25.3	24.4	27.1	1.2
SM 2[c]	8.4	31.7	8.5	31.7	7.4	32.7	8.4	31.4	30.6	35.6	1.4
LT 1[d]	2.7	22.1	2.7	22.1	2.9	22.5	..	..	21.2	24.2	0.0
LT 2[a]	..	20.4	..	20.4	..	21.1	..	20.6	19.2	22.4	..
LT 3[d]	2.1	22.2	2.4	21.9	2.9	22.7	..	..	21.5	23.5	0.1
LT 4[d]	2.9	19.3	3.0	19.2	3.6	19.4	..	..	19.0	21.6	0.07
HT 1[e]	3.7	16.1	3.7	16.3	3.6	16.8	..	..	..	..	0.54
HC 1[f]	1.8	13.6	1.6	13.8	..	13.6	..	..	12.0	15.1	0.29

[a] Ratio of amines obtained before and after removal of tar acids by Bureau of Mines method.
[b] Synthetic solution, 5 per cent amines, 25 per cent phenols.
[c] Synthetic solution, 10 per cent amines, 30 per cent phenols.
[d] Low-temperature tar distillates. [e] High-temperature tar distillate. [f] Hydrogenated coal distillate.

siderable amounts of tar bases are removed along with the phenols, and usually the amount of water going into the oil layer is small. The amount of tar bases removed in the alkali wash is directly proportional to the concentration of tar acids, alkali, and tar bases and inversely proportional to the molecular weight of the tar bases. The structure of the tar bases and acids also is a factor. After the tar acids have been removed, the tar bases, as is well known, are easily removed with mineral acid.

Analysis of Oils Containing Carboxylic Acids

To determine the amount, generally small, of carboxylic acids and other acids of similar strength in tar oils, the extract obtained by washing with alkali usually is saturated with carbon dioxide and then acidified with hydrochloric or sulfuric acid (*21*). The weakly acidic phenols are liberated by carbon dioxide and the stronger acids by mineral acid. Methods of this kind are time-consuming and necessitate the acidification of considerable amounts of carbonate solutions. A study of synthetic solutions and tar oils containing various amounts of benzoic and acetic acids has shown that the strong tar acids may be determined directly by extraction with sodium or potassium carbonate solutions. The synthetic solutions were prepared by mixing the desired amounts of cresol, a carboxylic acid, toluene, and an amine mixture (equal parts by volume of pyridine, quinoline, isoquinoline, and aniline). The amount of carboxylic acid added was judged by the increase in volume of the solution. The solution and tar oils were analyzed by the following reagents and order of extraction:

1. 100 cc. of 20 per cent sulfuric acid (sodium chloride)
2. 50 cc. of 20 per cent sulfuric acid (sodium chloride)
3. 50 cc. of 10 per cent sodium carbonate
4. 100 cc. of 10 per cent sodium hydroxide
5. 35 cc. of 10 per cent sodium hydroxide
6. 15 cc. of 10 per cent sodium hydroxide
7. 50 cc. of 20 per cent sulfuric acid (sodium chloride)
8. 25 cc. of 20 per cent sulfuric acid (sodium chloride)
9. 15 cc. of 20 per cent sulfuric acid (sodium chloride)
10. 10 per cent sodium hydroxide

The volume of oil was recorded at extractions 2, 3, 6, 9, and 10. The last extraction was made to remove any trace of phenols not accounted for previously. In the case of the synthetic solutions, the volume loss at this point was only 0.2 to 0.3 cc., and was disregarded. In the case of the tar oils, appreciable volume losses were often observed in the last extraction with alkali.

The results obtained (Table VI) indicate that carboxylic acids may be determined satisfactorily, the values found agreeing very well with the amounts present. Nothing new was revealed concerning the determination of amines and phenols. As observed in previous analyses, the amine values are low and the phenol values high.

Correction for Water Absorption

The suggestion has been made previously (*6*) that absorption of water by the tar oil is partly responsible for the fact that the values obtained for amines and phenols are usually low and high, respectively. It has been observed in many cases that washing 100 cc. of tar oil with 50 cc. of 20 per cent sulfuric acid (saturated with inorganic salt) causes the oil layer to undergo a volume increase of about 1 cc. During this operation some quantity of tar bases must have passed into the aqueous layer unobserved, causing the amines value to be erroneously low. It is likely that most of the water dissolved in the oil layer is removed in the alkaline extraction along with the phenols, resulting in a high value for the tar-acid content.

It has been found that errors arising from water absorption may be obviated somewhat by adding 2 to 3 cc. of aqueous sodium chloride solution to the oil as the first stage of the analysis. The increase in volume caused by this washing was noted, and later subtracted from the volume

Table VI. Synthetic Solutions Containing Benzoic Acid

Amines				Phenols		Carboxylic Acids	
	Found						
Present	First wash	Second wash	Total	Present	Found	Present	Found
Volume–Per Cent							
5.1	3.0	1.7	4.7	20.0	20.4	0.0	0.0
5.2	2.9	1.8	4.7	20.5	21.2	0.7	0.7
4.6	2.6	1.7	4.3	20.1	20.9	1.2	1.1
4.8	2.7	1.8	4.5	19.9	20.2	2.6	2.7

Table VII. Analysis for Acidic and Basic Constituents with Preliminary Addition of Salt-Water Solution

No.	Modified Bureau of Mines Method Amines	Modified Bureau of Mines Method Phenols	Salt-Water Solution Added Amines	Salt-Water Solution Added Phenols	Salt-Water Solution Added Carboxylic acids	Liberation Method Phenols
	%	%	%	%	%	%
1	2.6	37.9	3.6	37.0	0.0	..
2	..	..	2.7	13.4	1.0	13.0
3	1.7	27.3	2.2	26.8	0.0	26.5
4	1.9	28.9	2.0	28.6	0.0	26.7
5	..	..	2.4	31.8	1.6	30.0
6	5.5	19.7	5.2	19.4	0.0	19.4
7	6.2	26.1	6.3	24.9	0.6	25.4
8	2.8	15.1	3.4	12.6	1.2	14.1

1. Synthetic solution: 4% amines, 36% cresol, and 60% toluene; 0.9 cc. of water absorbed.
2. Hydrogenated coal distillate; 0.2 cc. of water absorbed.
3. Coal tar (500° C. carbonizing temp.) distillate; 0.6 cc. of water absorbed.
4. Coal tar (600° C. carbonizing temp.) distillate; 0.4 cc. of water absorbed.
5. Coal tar (700° C. carbonizing temp.) distillate; 0.6 cc. of water absorbed; 1.2% of benzoic acid added.
6. Coal tar (800° C. carbonizing temp.) distillate; 0.2 cc. of water absorbed.
7. Coal tar (800° C. carbonizing temp.) distillate; 0.3 cc. of water absorbed.
8. Coal tar (900° C. carbonizing temp.) distillate; 0.4 cc. of water absorbed; 0.8% of benzoic acid added.

1 to 4. Ten per cent sodium carbonate used to remove carboxylic acids.
5 to 8. Almost saturated potassium carbonate solution used to remove carboxylic acid.

contraction to alkali. The tar-base value was indicated directly by the contraction in volume caused by washing the water-containing oil (oil washed with sodium chloride solution) with the sulfuric acid reagent.

To ascertain the effect of adding water before extracting with sulfuric acid and sodium hydroxide solutions, one synthetic solution (prepared as previously from cresol, toluene, pyridine, quinoline, isoquinoline, and aniline) and several tar-oil distillates were analyzed by a procedure identical with that used to obtain the data in Table VI, with the exception that a preliminary wash with 2 to 3 cc. of sodium chloride solution was employed. It was found necessary to allow considerable time for the layers to separate where the oil was washed with carbonate solutions. In some instances a nearly saturated solution of potassium carbonate was less troublesome than 10 per cent sodium carbonate, and with either reagent a good separation of the layers must be effected to determine traces of carboxylic acids. For the purpose of comparison the same synthetic solution and tar oils (see Table VII) were analyzed by the modified Bureau of Mines method and the liberation procedure of Morgan and Meighan (methods 2 and 5, Table V). Small amounts of benzoic acid were added to tar oils 5 and 8, but in all cases the liberation method was carried out on the original, untreated distillates.

As may be seen from Table VII, washing the oil with salt solution before extracting the tar acids and bases caused higher and lower values, respectively, to be obtained for the amines and phenols. Such values are more accurate than the ones obtained by simple extraction methods; hence the preliminary wash with salt water is a worthy addition to the contraction method.

The data in Table VIII show that oils containing appreciable amounts of water-soluble amines and carboxylic acids give erroneous results when analyzed by the procedure described previously and used to obtain the data in Table VII. This is due to the fact that the water-soluble car-

boxylic acid (acetic acid) is extracted along with the amines in the sulfuric acid wash. More accurate results (see solutions 3 and 4, Table VIII) were obtained by extracting the acetic acid just after the sodium chloride–water treatment and before removal of the amines.

TABLE VIII. ANALYSES OF SYNTHETIC SOLUTIONS[a] CONTAINING ACETIC ACID

Synthetic Solution No.	Water Absorbed	Amines Present	Amines Found	Phenols Present	Phenols Found	Carboxylic Acids Present	Carboxylic Acids Found
	Cc.	*Volume–Per cent*					
1[b]	0.4	5.2	6.3	20.4	20.6	1.6	0.5
2[c]	0.5	5.3	7.5	20.4	20.5	2.8	0.7
3[d]	0.5	5.2	5.2	20.1	19.9	2.0	2.6
4[e]	0.4	5.5	5.0	20.0	20.2	1.6	2.1

[a] Synthetic solutions prepared from toluene, cresol, acetic acid, and an amine mixture (equal parts by volume of pyridine, quinoline, isoquinoline, and aniline).
[b] Carboxylic acid extracted with saturated potassium carbonate after sulfuric acid extraction.
[c] Carboxylic acid extracted with 10 per cent sodium carbonate after sulfuric acid extraction.
[d] Carboxylic acid extracted with saturated potassium carbonate after sodium chloride–water treatment.
[e] Carboxylic acid extracted with 10 per cent sodium carbonate after sodium chloride–water treatment.

Conclusions

Dilute alkali (about 10 per cent) is a suitable reagent for determining tar acids by contraction methods. In the presence of tar acids, more concentrated alkali dissolves considerable quantities of nonacidic material, chiefly tar bases, and gives erroneous results; more dilute alkali (about 5 per cent) is not satisfactory because of its tendency to form emulsions with tar distillates.

Reagents such as 20 per cent sulfuric acid saturated with certain inorganic salts (sodium chloride, potassium sulfate, etc.) are suitable for extracting tar bases in contraction methods. The other acid reagents examined were found to dissolve considerable quantities of the lower boiling tar acids.

The common procedure of extracting with alkali and then with mineral acid gives high and low results, respectively, for tar acids and bases. More accurate results are obtained by extracting first with mineral acid, and then alternately with alkali and mineral acid until all tar acids and bases are removed.

The high and low values obtained for tar acids and bases, respectively, are due to (1) the solvent power of alkaline phenolate solutions for amines and (2) absorption of water by the oil layer. Errors from these two causes may be partly eliminated by extracting with dilute alkali and by making a correction for the water absorbed.

In agreement with the conclusions of Weiss (*31*) but contrary to those of Hill (*15*), it was found that contraction methods give higher tar-acid values than liberation methods.

The more efficient and convenient method of extracting first with alkali is almost as accurate as extracting first with mineral acid, if dilute alkali (about 10 per cent) is employed.

Tar acids may be determined as strong (polyhydric phenols and carboxylic acids) and weak (monohydric phenols) acids by extraction with both sodium (or potassium) carbonate and alkali.

The procedure described below is recommended for determining tar bases, carboxylic acids, and phenols in tar oils (using about 100 cc. of oil in a graduated separatory funnel, *10*, *31*).

The oil is shaken with 2 to 3 cc. of an approximately saturated sodium chloride solution; the increased volume of the oil layer is noted and used subsequently in calculating volume contractions.

Extracted with 5 to 10 cc. of approximately saturated potassium carbonate solution; diminution in value of oil layer is indication of carboxylic acid content.

Extracted in succession with 100- and 50-cc. portions of the sulfuric acid reagent (20 per cent sulfuric acid, approximately saturated with sodium chloride).

Extracted in succession with 100-, 35-, and 15-cc. portions of 10 per cent sodium hydroxide.

Extracted in succession with 50-, 25-, and 15-cc. portions of the sulfuric acid reagent.

Extracted with 15 to 20 cc. of 10 per cent sodium hydroxide.

The amounts of tar bases and phenols present are indicated by the total volume contractions to sulfuric acid and sodium hydroxide, respectively. The tar acid value is corrected by subtracting from it the water-absorption value (obtained in the first step).

Acknowledgment

The authors are indebted to J. D. Davis and L. P. Rockenbach for supplying coal tars and to H. H. Storch and T. E. Warren for providing samples of hydrogenated coal. Special thanks are due to Dr. Storch for his kind examination of the manuscript and helpful suggestions.

Literature Cited

(1) Bakers, W. E., Dept. Sci. Ind. Research (Brit.), *Fuel Research Tech. Paper*, No. 37, 191 (1933).
(2) Cheng, Y. C., and Morgan, J. J., *Gas Age-Record*, **59**, 815–16, 818 (1927).
(3) Dept. Sci. Ind. Research (Brit.), *Fuel Research Tech. Paper*, No. 32, 45 (1931).
(4) Farinholt, L. H., Harden, W. C., and Twiss, D., *J. Am. Chem. Soc.*, **55**, 3383–7 (1933).
(5) Fieldner, A. C., and Davis, J. D., U. S. Bur. Mines, *Monograph* 5, 145 (1934).
(6) Fisher, C. H., and Eisner, Abner, "Extraction Methods for Determining Tar Acids and Bases, and Variables Affecting Their Accuracy," in press.
(7) Franta, W., and Lavine, I., IND. ENG. CHEM., **28**, 119–21 (1936).
(8) Fridli, R., and Raffay, B., *Magyar Chem. Folyoirat*, **40**, 125–35 (1934).
(9) Gas Chemists' Handbook, 3rd ed., p. 431, New York, American Gas Association, 1929.
(10) *Ibid.*, p. 433.
(11) Greenbaum, F., *Oesterr. Chem.-Ztg.*, **26**, 147–9 (1923).
(12) Greenbaum, F. R., *Catalyst*, **12**, No. 5, 6–10 (1927).
(13) Hatcher, W. H., and Skirrow, F. W., *J. Am. Chem. Soc.*, **39**, 1939–77 (1917).
(14) Heinze, R., and Marder, M., *Chem. Trade J.*, **93**, p. 85 (1936).
(15) Hill, J. B., IND. ENG. CHEM., **15**, 799–800 (1923).
(16) Hoffert, W. H., Claxton, G., and Hancock, E. G., *Gas J.*, **214**, 103–5, 167–71 (1936).
(17) Kester, E. B., and Rockenbach, L. P., unpublished work.
(18) Lazar, A., *Gas J.*, **153**, 622 (1921).
(19) Lugovkin, B. P., *J. Chem. Ind. (Moscow)*, **5**, 798–9 (1928).
(20) McKee, R. H., and Parker, H. H., IND. ENG. CHEM., **19**, 1343–4 (1927).
(21) Morgan, G. T., Pratt, D. D., and Ross, J., *J. Soc. Chem. Ind.*, **48**, 29–34T (1929).
(22) Morgan, J. J., and Meighan, M. H., IND. ENG. CHEM., **17**, 626–8 (1925).
(23) *Ibid.*, **17**, 696–700 (1925).
(24) Pieters, H. A. J., *Het Gas*, **49**, 472–4 (1929).
(25) Rakovskii, V. E., and Ioffe, P. M., *Khim. Tverdogo Topliva*, **3**, 733–43 (1932).
(26) Scheuble, R., *Ann.*, **351**, 473–80 (1906).
(27) Skirrow, F. W., and Binmore, T. V., *J. Am. Chem. Soc.*, **40**, 1431–42 (1918).
(28) Stadnikov, G. L., *Khim. Tverdogo Topliva*, **5**, 193–200 (1934).
(29) Ubaldini, I., and Ciarrocchi, I., *Acqua e gas*, **21**, 124–7 (1932).
(30) Walther, R. von, and Lachmann, K., *Braunkohlenarch.*, No. 26, 1–11 (1930).
(31) Weiss, J. M., J. IND. ENG. CHEM., **10**, 911–16 (1918).

RECEIVED January 25, 1937. Published by permission of the Director, U. S. Bureau of Mines. (Not subject to copyright.)

Determination of the Moisture Content of Tobacco

RICHARD M. CONE[1] AND LOYAL H. DAVIS, Philip Morris & Co. Ltd., Inc., Richmond, Va.

IT HAS been pointed out by Cone (*4*) that the control of the moisture content of tobacco is one of the most important phases of manufacture. While some hygroscopicity data are available (*9, 15*), they are insufficient for the types chiefly used in this country, and the writers had planned additional work to measure the equilibrium vapor pressure of various types, over a wide range of temperatures and moisture values.

It was realized, however, that there is no such thing as an "absolute" moisture content for any sample of tobacco; the value obtained depends on the method used, and few laboratories agree on the same method. Methods include drying the samples in ovens, for varying times, at different temperatures, with or without forced air circulation; drying at room temperature over various desiccants, under atmospheric pressure or vacuum; various distillation procedures with solvents immiscible with water; and indirect procedures involving conductivity or dielectric constant. In this work an attempt has been made to compare six methods in common use.

No experiments on the various "indirect" methods were made. The Tag-Heppenstall moisture meter, methods based on a change in dielectric constant (*7*), and others depending on the evolution and measurement of acetylene when the tobacco is mixed with calcium carbide (*10*) must all be calibrated against some such method as those discussed here. Attempts to deduce the moisture content from the humidity of the air in the tobacco were ruled out by the writers' experience, by that of other observers (*12*), and by the slowness with which equilibrium is reached (*15*). Other methods which have been suggested (*1, 11*) do not lend themselves to use on a large number of samples with a minimum of effort.

Selections of Samples for Drying

It is generally agreed that the greatest source of error in moisture determinations on tobacco is the heterogeneity of the material. Any manufactured sample is a blend of several grades, if not of several widely different types, and the proportions are not the same in every part of a large lot. The types vary in hygroscopicity, and as the more hygroscopic shreds rob the others of their moisture, variations of the water content are produced. Most tobacco ready for smoking also contains added substances (sugars, glycerol, diethylene glycol) which increase its natural hygroscopicity (*4*); any minor maldistribution of such material can cause a disproportionately large local concentration of water. If one attempts to pulverize and mix a sample of tobacco, moisture is usually lost in handling, and the sample must be very dry before it can be powdered. Moreover, a loose, fluffy mass of cigaret filler may be dried more rapidly and uniformly by most methods than an equal weight of fine powder. It is desirable to dry as much as possible at each determination; the writers have found 20 grams about the maximum for convenient use and the minimum for sufficient accuracy. Any method, therefore, which is restricted to a much smaller sample has been ruled out.

It was accordingly decided to compare single grades, representative of the most important types. Flue-cured, "bright," or "Virginia" tobacco amounts to half the domestic production, and Burley is next in importance. Since by the criteria of Dixon and his associates (*6*) tobacco 30 months old may be considered fully aged, a sample of 1933 tobacco from Wilson, N. C., U. S. Grade C4F, was selected to represent flue-cured, and a sample of 1933 tobacco from Lexington, Ky., same grade, was chosen as typical Burley. These samples will be designated as "flue-cured" and "Burley," respectively. Flue-cured tobacco is generally more hygroscopic than air-cured Burley or Maryland, and contains up to 25 per cent of sugars, whereas the latter two contain almost none (*5, 8*).

Two samples of cut cigaret tobacco (blends A and B) were also used. These were blends of various types and grades, and their hygroscopicity had been increased by the addition of diethylene glycol. The cut tobacco was usually taken from the middle of a large, fairly tight container, and was mixed as well as possible in an atmosphere close to the equilibrium humidity. In general physical and hygroscopic properties it was felt that these blends were fairly representative of the popular American brands.

Experimental

All samples were cut by machine into shreds the usual width of cigaret filler (0.75 mm.), thoroughly mixed, and packed into plug-top tins (1600 cc., 16-ounce size). All seams were sealed with paraffin. Samples from the same tin taken at intervals of several weeks showed no measurable change in moisture content. For each determination except by distillation, about 20 grams of tobacco were weighed quickly into a covered aluminum dish 63 mm. in diameter and 45 mm. deep. The electric oven used was a Freas No. 601, the temperature of which can be kept at 100° ± 0.5° C. all over the oven. A strong current of air was drawn by a fan horizontally through the drying chamber at such a velocity that it did not quite blow tobacco out of the dishes. For the British tests, on the basis of which duty is levied, small steam-jacketed ovens were kept very close to 100°, but the only circulation obtained was by convection.

After the oven-drying, the samples were cooled in desiccators over porous barium oxide for at least an hour.

For the samples dried over sulfuric acid, enough acid was used to maintain the acid concentration above 90 per cent after it had absorbed all the moisture it would. Three days after introducing the samples, the acid was stirred to prevent stratification of the layers of different concentrations.

The vacuum desiccators were exhausted by a water aspirator to 26 mm., and it was found that this pressure was maintained without leakage.

The toluene distillation apparatus was essentially that of Bidwell and Sterling (*2*). The cylindrical measuring tube was 0.782 cm. in diameter; the menisci were read from a reference point by a vernier caliper and the volumes were computed. Use of a smaller tube was attempted, but complete separation of layers was impossible. Distillation was continued until no more water could be driven over, although it was difficult to decide just when this desideratum occurred. Every sample, however, was distilled at least 2 hours.

In the 3-hour oven test the size of the sample influences the results obtained. With a given container, the larger the sample, the lower the result; but the results are not much lower until it is necessary to pack the tobacco to get the whole sample in. When tobacco is dried in vacuum, however, the size of the sample is of little effect. By any method, the time of drying is a factor which must be decided empirically, for it is practically impossible to dry to constant weight (*14*).

In vacuum desiccators the loss in weight after the first few days is very slow; the authors opened their desiccators at 5, 9, and 15 days with one sample of tobacco, weighing the dishes and reëvacuating each time (Table I). The period of

[1] Present address, Solvay Process Company, Syracuse, N. Y.

TABLE I. MOISTURE DETERMINATIONS

(Sample of cigaret blend No. 1, from cut-filler storage)

Oven Drying, 3 Hours at 100° C.

Weight of sample, grams	13.5	21.0	29.3
Per cent of water	11.59	11.50	11.04
Vacuum Drying over P_2O_5			
Weight of sample, grams	10.0	20.0	30.0
Per cent of water, 5 days	9.67	9.84	9.66
9 days	9.84	9.91	9.74
15 days	10.03	10.10	9.93

7 days was chosen simply because it is about as long as most workers are willing to wait (Table II).

Discussion of Results

Table II shows that for a given sample of tobacco moisture values may vary as much as 50 per cent, depending on the method used, and that the differences between the methods are by no means constant with all types of tobacco or for all moisture values. The choice of methods, therefore, depends simply on how much water the experimenter wishes to remove. The sulfuric acid apparently takes out only that held mechanically by capillarity; when something as hygroscopic as diethylene glycol has been added to the tobacco, perhaps even this water is not completely removed, for diethylene glycol itself is a fairly good desiccant. Vacuum drying at room temperature seems to remove all the water held by absorption and adsorption, which apparently is all that contributes to the mechanical pliability of the leaf.

Barium oxide was substituted for phosphorus pentoxide as the desiccant in these experiments; it seems to be as good a drying agent (*3*) and there is less chance of its taking up the volatile bases of tobacco. The writers found a reduction in the nicotine content of tobacco dried over phosphorus pentoxide and measurable amounts of nicotine (about 5 per cent of that in the tobacco dried) in phosphorus pentoxide over which tobacco has been dried, and got slightly higher results for the moisture when phosphorus pentoxide was used as the desiccant (Table II).

At 100° C. in a good draft salt hydrates and hydrates of the sugars present begin to decompose. Flue-cured tobacco which contains up to 25 per cent of sugars (*5*) gives values 1.16 to 1.5 per cent higher on drying 3 hours at 100° C. than with vacuum drying over barium oxide; the 16-hour British test gives a value 2.85 per cent higher. With air-cured Burley which contains practically no sugar, the 3-hour oven test gives a value only 0.1 per cent higher than vacuum drying, and the British test gives 0.26 per cent higher. Since the chief chemical difference between flue-cured and Burley is the sugar content, this factor is probably responsible for the different values obtained.

It is also likely that at 100° C. other substances than these hydrates are decomposed. In a sample of cigaret blend A containing 11.52 per cent of moisture (oven), the writers found that in 3 hours at 100° C. the percentage of nicotine on the basis of the original moisture content was reduced from 2.45 to 2.16 per cent—a known error of around 0.3 per cent. The writers believe that the humidity of the room air also influences the results. At the conclusion of the 16-hour British test the tobacco had been considerably darkened and had lost most of its original hygroscopic power.

The toluene distillation simply dries at the boiling point of toluene (111° C.). The appearance of the tobacco indicates that even greater decomposition has taken place and while the authors agree with other observers (*2*, *13*) that this method obviates the possibility of oxidation, it also probably decomposes some of the carbohydrate present. Bidwell and Sterling (*2*) claim that water of crystallization is separated from some substances, and the authors' results show that this may be the case with some compounds present in tobacco. Since water was still being slowly liberated after 2 hours' distillation, the decision to stop at any particular time makes this method as purely empirical as any of the others. In addition, there was very poor separation of water and toluene in the tube the authors finally used, and all the water does not descend from the condenser into the graduated section.

Since any method is more or less empirical and since all except distillation give consistent results with little trouble, the selection of a procedure becomes largely a matter of convenience. The authors feel, therefore, that the speed of the 3-hour oven test and the fact that a single worker with a fast balance can handle nearly 100 samples a day makes this the most useful for general control work. For calibration and comparison, vacuum drying for a week over a good neutral or alkaline desiccant (magnesium perchlorate, calcium sulfate, or porous barium oxide) is to be recommended.

TABLE II. MOISTURE DETERMINATIONS

Type	7 Days[a] over H_2SO_4	7 Days[a] over P_2O_5 (Vacuum)	7 Days[a] over BaO (Vacuum)	3 Hours in Electric Oven at 100° C.		16 Hours in Steam-Heated Oven at 100° C. (British Test)		Toluene Distillation
	%	%	%	%	%	%	%	%
Flue-cured	9.92	12.66	12.32	13.84	13.88	14.92	15.17	...
	10.13	12.61	12.50	13.88	13.80	15.38	15.12	...
	10.07	12.72	12.18	13.72	14.00	15.10	15.40	...
	...	...	...	13.63	13.88	...	...	...
Av.	10.04	12.66	12.33	13.83		15.18		...
Same kept 18 hours at 22.22° C. (72° F.), 61% relative humidity	8.90	...	10.56	11.59		...	...	...
	8.70	...	10.38	11.55		...	...	...
	8.75	...	10.43	11.73		...	...	...
Av.	8.78	...	10.46	11.62		...		...
Burley	9.00	...	13.03	13.09		13.32	13.13	13.97
	9.07	...	12.92	12.96		13.08	13.24	14.15
	9.03	...	12.84	13.03		...	...	14.22
Av.	9.03	...	12.93	13.03		13.19		14.11
Same kept 18 hours at 22.22° C. (72° F.), 60% relative humidity	7.75	...	10.04	10.23		...		...
	7.54	...	10.11	10.32		...		...
	7.56	...	10.29	10.17		...		...
Av.	7.62	...	10.15	10.24		...		...
Cigaret blend A	6.46	...	9.33	10.92		12.37	12.62	11.74
	6.35	...	8.91	10.70		12.80	11.91	11.94
	6.62	...	8.85	10.66		...	...	11.78
Av.	6.48	...	9.03	10.76		12.43		11.82
Same kept 18 hours at 22.22° C. (72° F.), 62% relative humidity	8.62	...	9.97	11.83		...	...	11.76
	8.76	...	10.38	11.74		...	...	11.68
	9.00	...	10.03	11.78		...	...	...
Av.	8.79	...	10.13	11.78		...		11.72
Cigaret blend B, wet from cutters	13.45	...	16.30	18.02		...	...	18.90
	13.29	...	16.79	18.20		...	...	18.56
	13.41	...	16.70	17.72		...	...	18.97
Av.	13.38	...	16.60	17.98		...		18.81
Cigaret blend A, too dry for use	4.42	...	5.77	7.08		...	...	8.12
	4.30	...	5.88	7.08		...	...	8.08
	4.41	...	5.88	7.08		...	...	8.47
Av.	4.38	...	5.84	7.08		...		8.22

[a] At 22° to 30° C.

Literature Cited

(1) Bakowski, S., *Roczniki Chem.*, **11**, 49–64 (1931).

(2) Bidwell, G. L., and Sterling, W. F., IND. ENG. CHEM., **17**, 147–9 (1925).

(3) Booth, H. S., and McIntyre, Lucille, *Ibid.*, Anal. Ed., **2**, 15 (1930).

(4) Cone, R. M., Hatcher, W. H., and Greenwald, W. F., *Chem. Met. Eng.*, 43, 128–32 (1936).
(5) Darkis, F. R., Dixon, L. F., and Gross, P. M., Ind. Eng. Chem., 27, 1152 (1935).
(6) Dixon, L. F., Darkis, F. R., et al., *Ibid.*, 28, 180 (1936).
(7) Fausz, J., and Rumm, H., *Kolloid Beihefte*, 39, 58–104 (1933).
(8) Garner, W. W., Bacon, C. W., and Bowling, J. D., Jr., Ind. Eng. Chem., 26, 970–4 (1934).
(9) Gladkov, N. G., and Trankvilitzkaya, N. A., *Tabachnaya Prom.*, 2, 23–6 (1934).
(10) Kotnitzkii, A. I., *Ibid.*, 4, 52 (1934).
(11) Lindner, Josef, *Z. anal. Chem.*, 86, 141–53 (1931).
(12) Miloslavskii, N. M., and Palant, A. I., *Ukrain. Khem. Zhur.*, 5, Tech. Pt., 117–25 (1930).
(13) Sadtler, S. S., J. Ind. Eng. Chem., 2, 66–7 (1910).
(14) Vladescu, I., and Zaporojanu, I., *Bul. cultivarei fermentarei Tutunului*, 24, 67–83 (1935).
(15) Wilson, R. E., and Fuwa, Tyler, J. Ind. Eng. Chem., 14, 913–18 (1922).

Received September 28, 1936. Presented before the Division of Agricultural and Food Chemistry at the 92nd Meeting of the American Chemical Society, Pittsburgh, Pa., September 7 to 11, 1936.

Separation of Beryllium in the Presence of Complex Tartrates

HOKE S. MILLER, Department of Chemistry, Columbia University, New York, N. Y.

OWING to statements in the literature (*1*, *4*) that solutions of beryllium salts in the presence of tartrate are stable to strong alkali, the idea has arisen that beryllium cannot be precipitated as the hydroxide in the presence of tartrate. The author has found, however, that beryllium may be precipitated from its complex tartrate solution by means of an optimum hydroxyl-ion concentration provided by the addition of ammonium hydroxide. In this way it is possible to separate beryllium, to a fairly quantitative extent, from such elements as aluminum, iron, copper, and chromium, which form complex tartrates from which the hydroxides of the metals are not precipitable upon addition of an optimum quantity of ammonium hydroxide.

Recently Jilek and Kota (*2*) demonstrated that beryllium could be separated quantitatively from aluminum by adding a known quantity of ammonium tartate solution to the salts of aluminum and beryllium; subsequent addition of an excess guanidine carbonate precipitates beryllium as the basic carbonate while the aluminum remains in solution.

The method herein proposed eliminates the use of guanidine carbonate by employing ammonium hydroxide.

A solution of beryllium nitrate, containing a known quantity of beryllium, was accurately pipetted into a 250-cc. beaker, to which was added a measured portion of 0.5 *M* potassium tartrate solution. The contents of the beaker were well mixed, after which a specified amount of 16 *M* ammonium hydroxide was added dropwise. After standing at room temperature (25° C.) for 10 hours, the precipitate was filtered on No. 44 Whatman paper, washed with water containing a trace of ammonium nitrate (*3*), dissolved with dilute nitric acid, reprecipitated as many times as indicated in the Tables I and II, washed as described above, ignited, and weighed as beryllium oxide.

Tables I and II are illustrative of typical results. It is significant that the amount of beryllium recovered depends, to within certain limits, on the quantity of ammonium hydroxide added to a given quantity of the salt solution. If the final solution is too feebly alkaline with ammonium hydroxide, all the beryllium may not be precipitated, thus leading to low results.

Table I. Precipitation of Beryllium from Its Complex Tartrate

BeO Theoretical	0.5 *M* Potassium Tartrate	16 *M* NH_4OH	BeO Found
Mg.	*Cc.*	*Cc.*	*Mg.*
146.3[a]	20	8	113.8
146.3[a]	20	10	126.0
146.3[a]	20	14	144.4
146.3[a]	20	16	146.4
146.3[a]	25	15	146.2
146.3[a]	25	16	145.1
146.3[a]	25	16	145.1
146.3[a]	25	16	144.1
146.3[a]	25	16	143.7
146.3[a]	25	16	144.2
140.0[a]	25	15	140.0
14.0[b]	3	5	14.2
14.0[b]	3	5	14.0
14.0[b]	3	5	14.0
14.0[b]	3	5	14.0

[a] 50.00 cc. of $Be(NO_3)_2$ solution ≈ 146.3 mg. of BeO, etc.
[b] 5.00 cc. of $Be(NO_3)_2$ solution + 20 cc. H_2O ≈ 14.0 mg. of BeO. In each case the precipitate was dissolved in dilute nitric acid and reprecipitated.

Table II. Precipitation of Beryllium from Its Complex Tartrate[a]

(In the presence of aluminum ≈ 33.5 mg.)

0.5 *M* Potassium Tartrate	16 *M* NH_4OH	BeO Found
Cc.	*Cc.*	*Mg.*
20	8	75.0
20	10	117.8
20	15	151.0
20	15	146.3
25	14	146.2
30	14	146.2
25	16	145.0

[a] For each determination 50.00 cc. of solution containing $Be(NO_3)_2$ ≈ 146.3 mg. of BeO and $AlCl_3$ ≈ 33.5 mg. of Al. Each precipitate was dissolved in nitric acid and reprecipitated.

Precipitation of Beryllium

Eight determinations of beryllium were made by precipitating beryllium as beryllium hydroxide in the presence of the complex tartrates of aluminum, iron, copper, and chromium.

To 50 cc. of solution containing $Be(NO_3)_2$ ≈ 140.0 mg. BeO, $AlCl_3$ ≈ 11.2 mg. Al, $FeCl_3$ ≈ 20.7 mg. Fe, $CuCl_2$ ≈ 47.3 mg. Cu, and $CrCl_3$ ≈ 19.5 mg. Cr, were added 30 cc. of 0.5 *M* potassium tartrate, followed by the dropwise addition of 16 cc. of 16 *M* ammonium hydroxide. From this point on the procedure described above was followed. The precipitates were redissolved three times and reprecipitated. An average of 143.6 ± 1.3 mg. BeO (theoretical, 140.0 mg. BeO) was obtained.

The principal disadvantage of this method of analysis is the tendency of gelatinous precipitates to co-precipitate crystalloidal matter. For this reason it is not recommended for very precise and accurate separations and determinations.

Literature Cited

(1) Aubel, C., and Ramdohr, G., *Liebigs Ann. Chem.*, 103, 33 (1857).
(2) Jilek, A., and Kota, J., *Z. anal. Chem.*, 87, 422 (1932); *Collection Czechoslov. Chem. Commun.*, 4, 97 (1932).
(3) Parsons, C. L., and Barnes, S. K., *J. Am. Chem. Soc.*, 28, 1589 (1906).
(4) Rosenheim, A., and Lehmann, F., *Ann.*, 440, 153 (1924).

Received January 11, 1937.

Interference of Phosphorus in the Determination of Fluorine

H. V. CHURCHILL, R. W. BRIDGES, AND R. J. ROWLEY, Aluminum Research Laboratories, New Kensington, Pa.

SINCE the discovery that fluorine is a causal factor of the dental defect known as mottled enamel on teeth, the literature of analytical chemistry has abounded with papers describing methods for its determination in small amounts—that is, up to a few parts per million. More recently the increased use of fluorides as insecticides has stimulated interest in such methods and, since the U. S. Food and Drug Administration placed the maximum allowable limit for fluorine content of food at 0.01 grain per pound (1.4 p. p. m.), the need for an accurate method to determine it in the range of 1 to 2 parts per million is paramount.

Workers in this field have used various procedures for the determination of fluorine. Churchill (*2*), when investigating the occurrence of fluorine in some waters of the United States, determined fluorine by a modified Fairchild method and verified the results by means of the spectrograph. Willard and Winter (*7*) developed a method for the determination of fluorine by distilling it with perchloric or sulfuric acid and titrating it with thorium nitrate, using the zirconium sodium alizarin sulfonate lake as an indicator.

Armstrong (*1*) improved this method by using alizarin sulfonate only as the indicator. Thompson and Taylor (*5*) developed a colorimetric method using the zirconium alizarin lake for the determination of fluorine in sea water. Sanchis (*4*) modified the procedure for the determination of fluorine in natural waters. Winter (*8*) used it for the determination of fluorine in alfalfa and grass, and Wichmann and Dahle (*6*) developed an improved titanium bleach method (Steiger Merwin reaction) and determined the most suitable pH for color development and the effect of many interfering ions and various solution concentrations. Hoskins and Ferris (*3*) made a study of the thorium nitrate titration, determining the most suitable pH at which it should be made and the minimum concentration at which the ions of halogens, NO_3, ClO_4, SO_3, AsO_3, SO_4, AsO_4, and PO_4 interfere.

It is well known that phosphates interfere with the determination of fluorine by the above colorimetric and thorium nitrate titration methods, but it generally has been considered that the Willard-Winter distillation made a complete separation of fluorine from phosphate. However, in determining fluorine in some foods having a high phosphorus content, by the thorium nitrate titration of a distillate made from the ash of the food, results for fluorine were obtained which varied from "not detected" to 11 parts per million. Investigation showed that such varying results obtained on navy beans were caused by titration of phosphate carried over into the distillate. When the first distillate was made alkaline with sodium hydroxide to phenolphthalein, evaporated to small volume, and redistilled, satisfactory results for fluorine were obtained which indicate the fluorine content to be less than 1 part per million.

It was evident that some variable factor caused the phosphate contamination. It seemed plausible that the contamination was caused by the presence of unburned carbonaceous matter or that possibly during ashing phosphate was reduced to a form which is readily carried over in the distillate. This is indicated by the following experimental analysis of navy beans:

Thorium nitrate titration of a distillate using sulfuric acid on the ashed sample indicated 7.2 p. p. m. of fluorine. In this distillate phosphate was present in appreciable amount, sulfate a trace.

When the distillate from sulfuric acid was concentrated and redistilled, using perchloric acid, less than 1 p. p. m. of fluorine was indicated. Phosphate and sulfate were not detected in this distillate.

To another distillate from sulfuric acid, which indicated 7.2 p. p. m. of fluorine, phosphate was added as phosphoric acid in amount equal to that present in the original ash. Concentration of the distillate followed by distillation, using perchloric acid, gave a titration indicating less than 1 p. p. m. of fluorine. In this distillate phosphate and sulfate ions could not be detected.

Satisfactory recovery of added fluorine was made by the double distillation. It, therefore, seems necessary to make a double Willard-Winter distillation of the fluorine from the ash of foods, for satisfactory determination of fluorine. The first is made with sulfuric acid rather than perchloric acid to eliminate hazard, as some carbonaceous matter is usually present. The second should be made with perchloric acid at 135° C., which gives a distillate free from phosphate and sulfate.

Fluorine in a number of food products, mostly purchased in retail stores, was determined by the above double-distillation procedure and titration with thorium nitrate, with the following results: Less than 0.2 p. p. m. of fluorine was indicated in dried beans, wheat bran, crushed oats, peanuts, mackerel (boned), carrots, turnips, sweet potato, Irish potato, canned corn, beef, mutton, and pork. Less than 1.0 p. p. m. of fluorine was indicated in baking powder C, pure wheat germ, alfalfa, wheat, wheat straw, yellow corn, and whole rice.

More than 1.0 p. p. m. of fluorine was found as follows:

Mackerel (with bones)	3.9	Corn germ	15.0
Salt pork	1.1	English Breakfast tea	66.0
Baking powder A	220.0	Gun Powder tea	67.0
Baking powder B	19.0	Oolong tea	41.0
Commercial wheat germ A	1.7	Canned salmon	4.5
Commercial wheat germ B	4.0	Canned sardines	7.3
Cottonseed meal	12.0		

Literature Cited

(1) Armstrong, W. D., *J. Am. Chem. Soc.*, **55**, 1741–2 (1933).
(2) Churchill, H. V., Ind. Eng. Chem., **23**, 996 (1931).
(3) Hoskins, W. M., and Ferris, C. A., *Ibid.*, Anal. Ed., **8**, 6–9 (1936).
(4) Sanchis, J. M., *Ibid.*, **6**, 134–6 (1934).
(5) Thompson, T. G., and Taylor, H. J., *Ibid.*, **5**, 87–9 (1933).
(6) Wichmann, J. H., and Dahle, D., *J. Assoc. Agr. Chem.*, **16**, 612 (1933).
(7) Willard, H. H., and Winter, O. B., Ind. Eng. Chem., Anal. Ed., **5**, 7–10 (1933).
(8) Winter, O. B., *J. Assoc. Agr. Chem.*, **19**, 362–5 (1936).

Received February 5, 1937.

Correction

In the article entitled "Physical and Chemical Properties of Petroleum Fractions. I. Behavior in Dilute Benzene Solutions" [Ind. Eng. Chem., Anal. Ed., **8**, 324 (1936)] by Harry T. Rall and Harold M. Smith, C in the equations in Table I should be multiplied by 100. Thus, the equation for A-1, Wet, should be

$$K = 64.98 - 0.16\ C \times 100$$

In the second article of the series, "II. Relations between Molecular Weight and Concentration in Dilute Solution" [*Ibid.*, **8**, 436 (1936)], S for oil O-1 in $C_2H_4Br_2$ should be 11,600.0 instead of 1160.0.

Harry T. Rall

Direct Determination of Oxygen in Organic Compounds by Hydrogenation

PAUL GOODLOE[1] AND J. C. W. FRAZER, Department of Chemistry, The Johns Hopkins University, Baltimore, Md.

RUSSELL and Fulton (*8*) and Russell and Marks (*9*) reported an improved method for the direct determination of oxygen in organic compounds containing only carbon, hydrogen, and oxygen and in compounds also containing nitrogen. Later Marks (*4*) applied the method to the determination of total oxygen in oxidized oils in the presence of small amounts of sulfur contained in the oils. The method is the hydrogenation method of ter Meulen (*7*); it has enjoyed the best success of all the direct methods for oxygen, although some workers have reported difficulties with it, one of the latest being Gauthier (*2*). It seemed desirable to render the method more dependable and capable of wider application.

With the present procedure and apparatus it has been successfully applied, without any modifications, to a similar variety of compounds containing carbon, hydrogen, oxygen, nitrogen, and sulfur. Moreover, the reproducibility was found to be generally as good as the accuracy—that is, about 0.1 per cent for the oxygen.

Apparatus

The apparatus of Russell and Fulton (*8*) was modified only slightly (Figure 1).

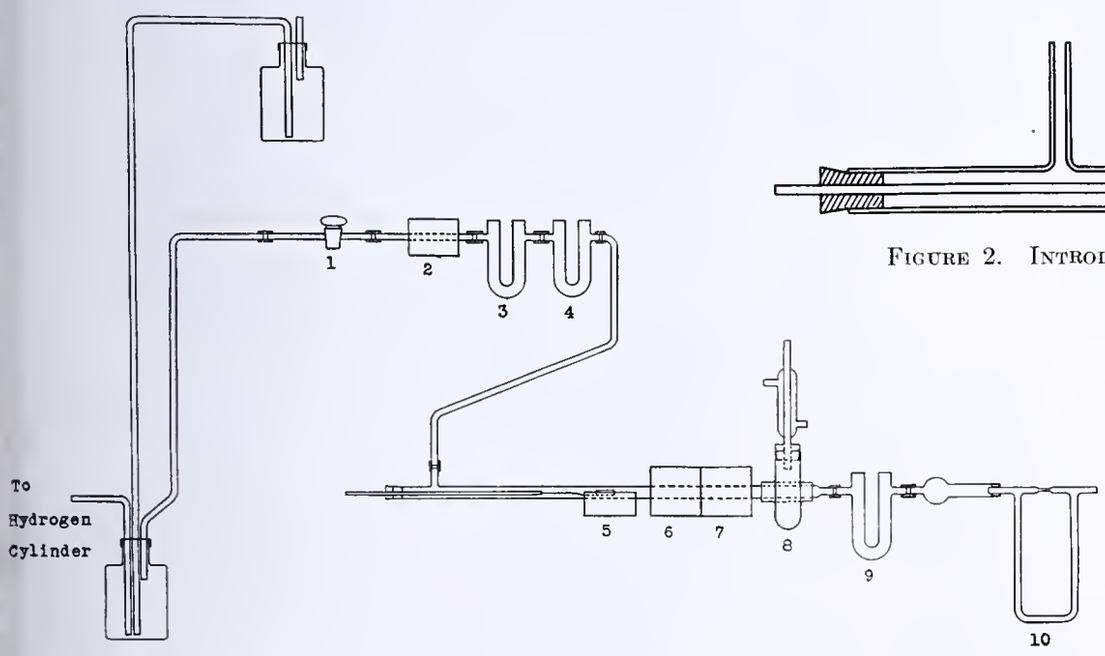

FIGURE 1. DIAGRAM OF APPARATUS

The cracking, 6, and catalyst chambers, 7, and preheater, 2, were electrically heated by specially prepared furnaces each 20 cm. long. A 2.5 × 5 × 10 cm. (1 × 2 × 4 inch) cast-aluminum block, 5, with a groove along the center of a large face and a longitudinal hole for a thermometer, was used in vaporizing the sample. A glass mortar, 8, 8 cm. long in which toluene was refluxed to maintain a temperature of 111° C. was used to heat a 2-cm. plug of silver sulfate in the case of halogen-containing compounds. This silver sulfate was omitted in all runs where halogen was not involved.

A capillary stopcock, 1, was used to adjust the flow of hydrogen; the hydrogen was dried by sodium hydroxide pellets, 3, and anhydrous calcium sulfate, 4, and was delivered to the apparatus under a pressure of about 2 meters (6 feet) of water siphoned from one 19-liter (5-gallon) carboy to another. The water formed during the analysis was absorbed by anhydrous calcium sulfate contained in a 150-mm. Schwartz U-tube, 9, attached to the quartz tube by a rubber connection. The exit hydrogen was passed through a flowmeter, 10, open to the atmosphere. The clear quartz tube had a total length of 70 cm. and an internal diameter of 7 mm.

The means employed for the introduction of the regular platinum microboat, during an exit flow of hydrogen of more than 200 cc. per minute, is illustrated in Figure 2. A one-hole rubber stopper contained a solid glass rod which extended into the quartz tube about 10 cm. Sealed into the end of this rod was a double length of Nichrome wire having a loop on the end the right size and shape for the microboat to fit snugly. The rod and wire remained in the tube during the analysis and attendant vaporization of the sample. The boat was removed by pulling it to the end of the quartz tube with the rod and wire and then picking it up with clean forceps. The boat containing the next sample was immediately placed in the wire loop and pushed into place in the tube.

Catalyst and Cracking Surface

The nickel chromite catalyst is quickly prepared from readily available materials and is easily handled even after reduction. The freshly prepared catalyst, after reduction at 400° C. for 10 or 12 hours (overnight) and then at operating temperatures for 1 hour, gave a constant blank of about 0.2 mg. per liter of hydrogen. Russell and Fulton (*8*) reported that it took 2 or 3 days to reduce their thoria-promoted nickel catalyst to a point where it gave a similar constant blank.

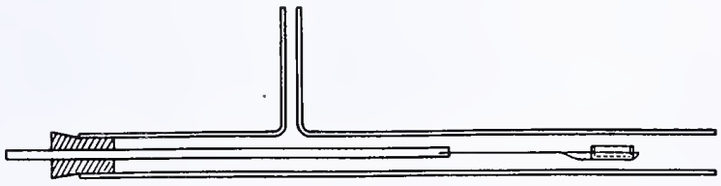

FIGURE 2. INTRODUCTION OF MICROBOAT

Of especial significance is the fact that the activity of the nickel chromite catalyst is unaffected by sulfur (*3*) up to relatively large amounts, and as sulfur is completely retained by this substance (*3*) the method is applicable to sulfur-containing compounds. Marks (*4*) has shown that the thoria-promoted nickel catalyst is also resistant to poisoning by sulfur.

Nickel chromite was also found to make the best cracking surface when heated to red heat. Some carbon dioxide escaped when platinized quartz beads were tried as cracking surface with nickel chromite as catalyst, whereas when nickel chromite was used as cracking surface (at 750° C.) and as catalyst (at 400°) the carbon dioxide was completely hydrogenated. Under these conditions the nitrogen in nitrogen-containing compounds is cracked directly to free nitrogen and practically no ammonia is formed (Table I).

The catalyst was prepared by weighing 31 grams of am-

[1] Present address, The Socony-Vacuum Oil Company, Paulsboro, N. J.

monium chromate [$(NH_4)_2CrO_4$] into one beaker and 29 grams of nickel nitrate [$Ni(NO_3)_2 \cdot 6H_2O$] into another; the nickel nitrate was dissolved in 50 cc. of distilled water and the solution poured over the dry ammonium chromate with stirring. This produces the double salt, $NiCrO_4 \cdot (NH_4)_2CrO_4 \cdot 6H_2O$ (*1*). After about 10 minutes of stirring, the precipitate was filtered off with suction, dried over a low flame, and decomposed in small portions in a porcelain casserole over a Bunsen burner at 200° C. with stirring.

$$NiCrO_4 \cdot (NH_4)_2CrO_4 \cdot 6H_2O = Ni(CrO_2)_2 + N_2 + 10H_2O$$

The catalyst so obtained was in fluffy particles which were put directly into the quartz tube for a distance of 40 cm. and into the preheater tube and packed slightly with light tapping. Approximately 10 grams of the catalyst were used in the combustion tube and 5 grams in the preheater.

Table I. Determination of Oxygen

Substance	Sample	Water	Ammonia	Oxygen Found	Oxygen Calculated
	Mg.	*Mg.*	*Mg.*	%	%
Benzoic acid	81.2	23.9	...	26.14	26.22
	99.2	29.3	...	26.23	26.22
Succinic acid	110.8	67.5	...	54.11	54.21
	112.6	68.6	...	54.11	54.21
Tartaric acid	110.6	37.6	...	30.19	63.96
	117.9	47.0	...	35.41	63.96
Picric acid	46.7	25.7	...	48.88	48.89
	60.2	33.0	...	48.69	48.89
3,5-Dinitrobenzoic acid	102.1	52.0	0.5	45.23	45.27
	101.6	51.8	0.6	45.28	45.27
Urea	89.5	26.8	0.2	26.60	26.64
	88.1	26.5	0.0	26.71	26.64
Acetamide	83.2	25.4	0.0	27.12	27.09
	82.2	25.0	−0.5	27.01	27.09
	88.5	27.0	0.7	27.09	27.09
	77.9	23.7	0.0	27.02	27.09
Trinitrobenzene	62.434	31.748	...	45.17	45.06
	65.278	33.032	...	44.94	45.06
	51.551	26.144	...	45.05	45.06
Pyrrol derivative ($C_{10}H_{13}NO_3$)	45.202	12.160	...	23.89	24.60
	63.962	17.683	...	24.55	24.60
	62.062	17.116	...	24.50	24.60
Diphenyl sulfone	70.1	11.5	...	14.57	14.67
	76.5	12.6	...	14.63	14.67
	68.2	11.2	...	14.58	14.67
	71.2	11.8	...	14.72	14.67
Chloroacetic acid	135.6	55.7	...	36.48	33.87
	127.6	54.7	...	38.08	33.87

Procedure

In general, the procedure of Russell and Fulton was followed. Fifty minutes were allowed for a run: 20 minutes for the vaporization of the sample, and 30 minutes for sweeping out the tube. The rate of flow of hydrogen was 60 cc. per minute.

The most important and by far the most difficult part of the analysis is the vaporization of the sample, which should be done slowly and evenly by heating the aluminum block under the sample with a microburner. A thermometer in the block registers the approximate temperature of the sample and a practice run is often advisable to learn the peculiarities of the individual substance when volatilized; the vaporization of the sample should be conducted about 20° above its melting point the first time it is run.

Substances will distill from the hot to the cold portion of the tube and in many cases distillation countercurrent to the flow of hydrogen was observed. This is effectively prevented by keeping the tube hotter (with an oxygen blowtorch) 6 or 8 cm. preceding the sample than in the region surrounding the boat. When all the substance has been volatilized from the boat, the aluminum block should be lowered and the boat heated with the free flame from the microburner before the oxygen blowtorch is applied.

With picric acid (Table I), when easily decomposable or explosive substances are used, it was found necessary to keep the temperature of the sample as low as possible during the vaporization and to spend a longer time than usual on this process. It is advisable to increase the rate of flow of the hydrogen to at least 90 cc. per minute.

With diphenyl sulfone (Table I), when difficultly decomposable substances are analyzed it is necessary to slow the rate of flow down to about 30 cc. per minute, so that the vapors may remain in contact with the cracking surface for a longer period of time.

Discussion of Results

In the case of compounds containing only carbon, hydrogen, and oxygen the results were satisfactory with one exception: with tartaric acid the percentage of oxygen found was very much too low. This was true for another hydroxy compound, sucrose, the results for which were thrown out because of an inactive catalyst.

It seems impossible to vaporize either tartaric acid or sucrose without carbonization of most of the sample. Other substances will carbonize, but when they are heated in the full blast of the oxygen blowtorch all the oxygen is given up and the results are satisfactory. In the case of sucrose, test runs with benzoic acid proved that the catalyst was inactive at the time of the sucrose runs. This may also be true for tartaric acid, though it is believed that all the oxygen was not volatilized from the residue in the boat. However, Gauthier (*2*) reported a successful analysis of this substance.

In a private communication, W. R. Kirner stated his inability to get satisfactory results with sucrose by a microhydrogenation method using a thoria-promoted nickel catalyst, and preliminarily attributed his consistently low results to difficulty in volatilizing all the oxygen from the sample. Russell and Fulton (*8*) reported the successful analysis of sucrose by hydrogenation.

Since nickel chromite catalyst will withstand fairly large quantities of sulfur, analyzing tartaric acid and sucrose mixed with a little free sulfur in the boat is planned in an effort to displace all the oxygen.

No difficulties were encountered with the compounds containing nitrogen; however, the polynitro derivatives are so explosive that they are difficult to handle.

Table I also shows the outcome of an attempt to determine the amount of ammonia formed in the case of 3,5-dinitrobenzoic acid, urea, and acetamide. An absorption tube containing glass wool moistened with concentrated sulfuric acid was attached following the tube containing calcium sulfate. No appreciable amount of ammonia was formed in any case. This is in agreement with the findings of ter Meulen (*5*), although Russell and Marks (*9*) reported considerable, though not theoretical, amounts of ammonia.

Although diphenyl sulfone was the only sulfur-containing compound tried, it is believed to be a sufficient test of the method. With this substance it was demonstrated that sulfur in reasonable amounts does not poison the catalyst completely.

Halogen compounds (chloroacetic acid) cannot be successfully analyzed with nickel chromite catalyst prepared as directed. This is in agreement with ter Meulen's findings (*6*) that a thoria-promoted catalyst is attacked by halogen acid, liberating water from the thorium oxide present. The chromite catalyst prepared according to the method outlined contains a small amount of free oxide, which presumably is never completely reduced.

The introduction of a slight modification should make the method applicable to halogen-containing compounds when nickel chromite is used. When this catalyst is pure it is insoluble in boiling concentrated hydrochloric acid (*3*), so that

if the catalyst, as prepared with a small excess of chromic oxide, were boiled or leached with several portions of boiling hydrochloric acid, it should no longer react to produce water under operating conditions in the quartz tube. Preliminary results from work now in progress indicate this to be true.

It has been shown definitely (Table I) that ammonia is not formed in the presence of this catalyst, even from a substance like urea; it is therefore planned to use phosphorus pentoxide as the absorbent for water, with no silver sulfate in the tube when analyzing halogen compounds. It is then possible that halogen may be determined simultaneously.

With these two modifications, the leaching of the catalyst with hydrochloric acid and the substitution of phosphorus pentoxide for calcium sulfate as the absorbing agent for water, it is believed the method will be readily applicable to halogen-containing compounds and therefore general with one simple setup.

The pyrrol derivative

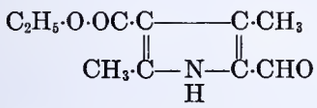

and the trinitrobenzene, furnished by A. H. Corwin, were run as unknowns for Frazer; a Kuhlmann microbalance was used for these runs with no modification of apparatus or procedure except the use of micro absorption tubes weighing about 15 grams when filled.

Summary

The method of hydrogenation has been successfully employed for determining the percentage of oxygen in organic compounds containing carbon, hydrogen, oxygen, nitrogen, and sulfur, using an active nickel chromite catalyst at 400° C. The low results obtained in the analysis of tartaric acid and sucrose indicated extreme difficulty in driving all the oxygen from the residue in the boat.

The accuracy and reproducibility are each about 0.1 per cent for the oxygen, or about that with which carbon is determined in ordinary combustions, and the apparatus and procedure are almost as simple as for combustions. The time allotted to a single run was 50 minutes.

A modification has been suggested which will probably make the method applicable to halogen-containing compounds.

Acknowledgment

The authors are indebted to A. H. Corwin for many suggestions.

Literature Cited

(1) Briggs, *J. Chem. Soc.*, **83**, 394 (1903); **85**, 678 (1904); **1929**, 242.
(2) Gauthier, *Bull. soc. chim.*, (5) **2**, 322 (1935).
(3) Jackson, Ph.D. thesis, The Johns Hopkins University, 1934.
(4) Marks, Ind. Eng. Chem., Anal. Ed., **7**, 102 (1935).
(5) Meulen, ter, *Rec. trav. chim.*, **43**, 899 (1924).
(6) Meulen, ter, *Ibid.*, **53**, 118 (1934).
(7) Meulen, ter, and Heslinga, "Neue Methoden der organisch-chemischen Analyse," Leipzig, Akademische Verlagsgesellschaft, 1927.
(8) Russell and Fulton, Ind. Eng. Chem., Anal. Ed., **5**, 384 (1933).
(9) Russell and Marks, *Ibid.*, **6**, 381 (1934).

Received October 30, 1936. Taken from the dissertation submitted by Mr. Goodloe to the Board of University Studies, The Johns Hopkins University, in partial fulfillment of the requirements for the degree of doctor of philosophy.

An Inexpensive Metal Chimney for Fusions

LOUIS J. CURTMAN AND LEO LEHRMAN, College of the City of New York, New York, N. Y.

THE device described in this paper was constructed to expedite the carrying out of fusions using a Meker or Tirrill burner as a source of heat. It is particularly serviceable where a high temperature must be maintained, as in the decomposition of a silicate with sodium carbonate.

For a long time the blast lamp was employed for most fusions, but it was noisy and troublesome. Later it was found that if an asbestos cylinder was placed over the crucible, a sufficiently high temperature could be obtained with a Tirrill or Meker burner; however, after a few heatings the asbestos crumbles and must be discarded. The authors' device, being made of metal, can be used for a long time, is inexpensive, and can be employed with any type of burner. Numerous experiments have shown that it is as effective as the asbestos cylinder.

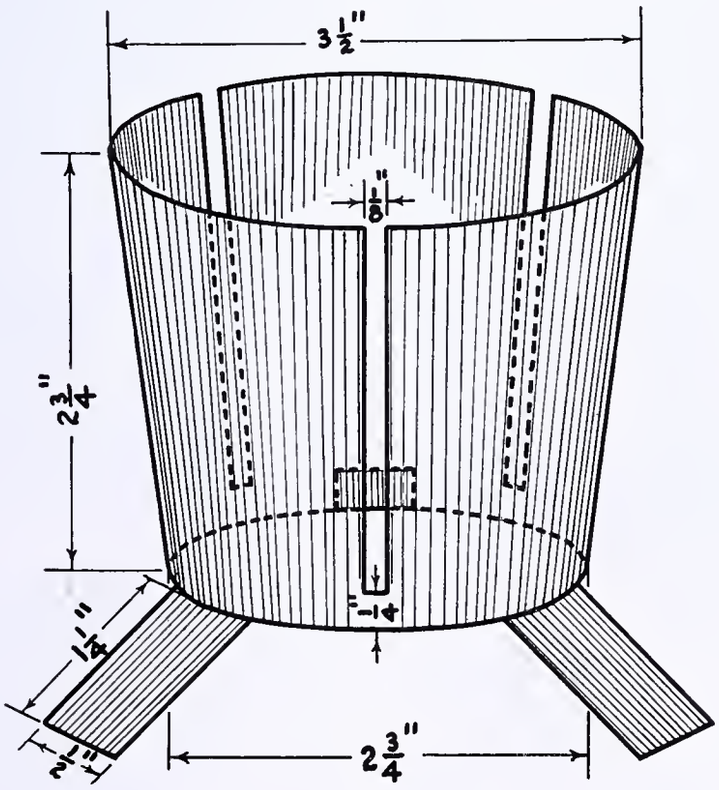

The chimney is constructed of ordinary tin-plated sheet steel, such as is used for tin cans. Three slots are cut equidistant from each other to hold conveniently a Vitreosil or clay triangle upon which the crucible can be supported. At the bottom of the device and spaced between the slots are three projections, by means of which the apparatus can be set on a ring or tripod. The drawing clearly shows the construction of the chimney.

Acknowledgment

The authors wish to thank Harold Wilson of the stock division for his kindness in making the various models that were tried out.

Received February 25, 1937.

Determining the Gelatinization Temperature of Starches

A Photoelectric Method

D. H. COOK AND JOSEPH H. AXTMAYER, School of Tropical Medicine, San Juan, Puerto Rico

A simple photoelectric method for the determination of the gelatinization temperatures of starches has been developed. The results can be plotted against temperatures to form smooth curves. Three types of characteristic curves have been found. One, typical of starches of tropical origin, has a very steep slope; the second, typical of northern grain starches, has a more gradual slope and irregular rate of gelatinization; the third is intermediate and is produced by a few northern and tropical starches. The slope of the curves seems to be determined by the fragility of the starch granule. The significance of these curves in determining the dietetic value of starches when fed to patients suffering from the tropical disease, sprue, is pointed out. The method may be used as an aid in identifying starches or following changes produced by swelling and hydrolyzing agents and may even find practical application in industrial starch plants.

WHILE the authors were studying the physical and chemical properties of starches of tropical origin, they thought it desirable to determine their temperatures of gelatinization. A search of the literature revealed conflicting data; different investigators failing to secure concordant results, even with the same method. Reichert (*4*), in his monumental work on starches, gives several references to workers who, between 1861 and 1909, tried to determine the gelatinization temperature of starches. Their methods vary from the microscopic examination of samples of a starch suspension at intervals when subjected to slowly increasing temperatures, to the visual estimation of swelling and gelatinization of starch suspensions in test tubes which were removed from a water bath at 5° C. intervals.

It appeared that none of the methods used was free from errors of manipulation, or from the personal equation. Since starch suspensions are opaque before heating and become translucent or clear when gelatinized, using a photoelectric method for the measurement of these physical phenomena appeared feasible.

Apparatus

After some trials, the final setup represented diagrammatically in Figure 1 was devised. It is simple in the extreme and can be assembled from equipment found in most laboratories.

It consists of a 60-watt tungsten lamp, fed from a Delta transformer to smooth out line voltage fluctuations, and a condensing lens to bring the beam of light to a focus in the reaction vessel, which is a wide-mouthed flask of 150-cc. capacity, containing a thermometer and small motor-driven stirrer. The reaction vessel is suspended in a 1-liter Pyrex beaker that serves as a water bath. The photoelectric cell is of the copper oxide or photronic type, and is directly connected with a 0–50 microammeter. A three-heat hot plate completes the assembly. The beaker water bath is covered with black paper in which two holes 3.75 to 5 cm. (1.5 to 2.0 inches) in diameter are cut to allow the beam of light to pass through the water bath and reaction vessel and into the photocell, and at the same time to cut out interfering light from the laboratory.

Operation

The reaction vessel is almost filled with distilled water and the heater is adjusted so that the temperature rise is around 0.5° C. per minute. When the temperature in the reaction vessel has reached about 40° C., the light is turned on, focused, and adjusted to give at least a full-scale reading on the microammeter. Sufficient dry starch—1 or 2 grams—is suspended in 25 cc. of water and slowly poured into the reaction vessel till the microammeter reading drops to 3 to 5 microamperes. As the temperature increases there will be a slow drift of the microammeter needle of two or three divisions. Most starches show a slight decrease in light transmission at this point, which generally is several degrees below the temperature of gelatinization, but this change is so gradual that it may be disregarded.

With a little experience one can tell when the starch has almost reached the temperature of gelatinization, as the suspension, which up to this time is of a dull flat white color, begins to take on an opalescent appearance, with a faint bluish tinge. When this stage is reached, the microammeter should be watched closely and the instant the needle begins to show an increased reading the temperature should be recorded. The microammeter readings are then taken for each 0.5° or 1.0° C. interval, till readings become constant or the boiling point is reached.

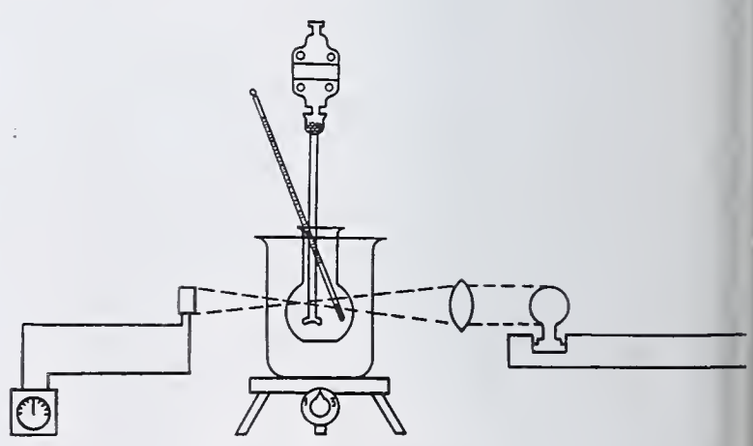

FIGURE 1. PHOTOELECTRIC SETUP

Since the current produced by the photronic cell is a lineal function of light intensity (*3*), the readings of the microammeter are directly proportional to the changes in light transmission of the starch suspension. The readings, therefore, can be plotted against temperatures to form smooth curves. The temperature at which the suspension shows its first increase in light transmission, or the beginning of swelling and gelatinization, is called the temperature of transition. This point and the rate of gelatinization as shown by the slope of the plotted curves are characteristic of the sample of starch

under investigation. Results are duplicable if the conditions of the experiment are kept constant. In fact, the temperature of transition and the slope of the curve can be used as a means of identification of many starches, if the starch samples have all been obtained by the same process of manufacture. The method is a delicate means of testing the treatment to which a starch has been subjected previous to gelatinization, as treatment with acids, or alkalies, desiccation over dehydrating agents, or drying at temperatures of 50° to 60° C. may modify both the temperature of transition and the slope of the curve.

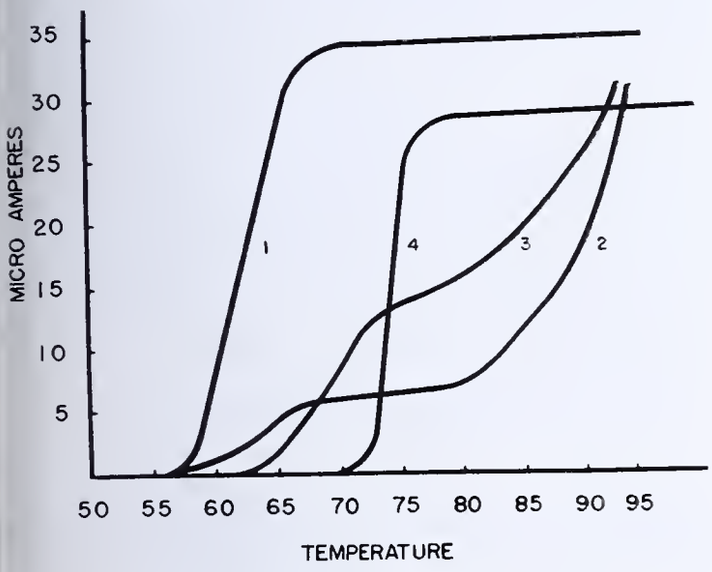

FIGURE 2. TYPICAL STARCH GELATINIZATION CURVES

1. Arracacha starch
2. Wheat starch
3. White potato starch
4. Taro starch

Results are duplicable if the conditions of the experiment are kept constant. The principal condition to watch is the rate of heating the water bath. The rate of heating affects the temperature of transition, but does not change the slope of the curve. By experiment the temperature of transition of a cassava starch was shifted 3° C. higher by changing the rate of heating from 6.3 to 0.8 minutes per degree C. It is therefore advisable in any series of experiments to maintain a fairly constant rate of heating. The authors found 1.5 to 2.0 minutes per degree Centigrade to be satisfactory.

Results

Taylor (*6*) suggested that different sizes of granules in the same starch might have different temperatures of transition, or varying rates of gelatinization. To test this, a sample of yautía starch [*Xanthosoma sagittifolium* (L.) Schott] was separated by flotation into two batches averaging 4 and 12 microns, respectively. The classification of all plant species used in this paper is Barrett's (*1*). These two samples showed no difference in their curves. It is possible that with wheat starch, which shows such wide variation in granule size, there might be some difference between the large and small granules, but experience leads the authors to believe that it would be slight.

The fact that taro, with a granule of only about 2μ average diameter, gives exactly the same type of curve as the edible canna with an average size of 60μ would indicate that granule size is not important in determining the rate of gelatinization. Within a given sample the largest and smallest granules might have slightly different transition temperatures, but apparently they rupture and gelatinize at the same rate.

One of the most interesting points brought out by this investigation is the wide difference exhibited by the curves of starches obtained from temperate and tropical zone plants. The temperature of transition of the temperate zone starches tested lies between 55° and 65° C. and they give curves of long duration with, first, a moderate increase of transmission, then a latent period or slowing up of the rate between 65° and 85° C., and then an increasing rate of transmission up to 90° to 95° C. The temperature of transition of the tropical starches generally lies between 60° and 78° C., with curves of short duration or very steep slope till transmission becomes constant, which generally occurs below a temperature of 85° C. Figure 2 illustrates this with characteristic curves for the starches of arracacha (*Arracacia xanthorrhiza* Baner), taro [*Caladium colocasia* (L.) W. F. Wight], white potato, and wheat obtained from the north. This peculiarity of starches from plants grown in different climates appears to be associated with the fragility of the granule envelope.

Taylor (*7*) mentions the difficulty of rupturing potato and wheat granules even by continued boiling, and Caesar (*2*), in his ingenious method of measuring the viscosity of 20 per cent starch pastes, mentions the same phenomenon. It is to be regretted that the only tropical starches included in his investigations were tapioca and sago. The former is one whose curves, in the authors' work, lie midway between those of truly tropical nature and northern, and which more nearly approaches potato in its type. This is confirmed by the viscosity curves which Caesar gave for these two starches. The authors have not investigated sago starch. It would be interesting to see if the tropical root starches with which the authors worked would give earlier and lower viscosity changes than the northern starches.

TABLE I. GELATINIZATION DATA

Starch Source	Size Min.	Size Max.	Transition Temperature	Temperature Finish	Difference
	Microns		° *C.*	° *C.*	° *C.*
Ñame hicamo (*Dioscorea polygonoides* H. & B.)	5	32	48	78	30
Apio (*Arracacia xanthorrhiza*, Baner)	4	22	56	66	10
Ñame mapuey (*Dioscorea trifida* L. f.)	19	58	61	72	11
Cassava [*Manihot manihot* (L.) Cockerell]	4	20	62.5	82.5	20
Edible canna (*Canna edulis* Ker.)	32	108	63	69	6
Yellow sweet potato [*Ipomoea batatas* (L.) Lam.]	4	25	66	72	6
Yellow yautía [*Xanthosoma sagittifolium* (L.) Schott]	4	19	69	79	10
White yautía (*Xanthosoma caracu* C. Koch & Bouché)	4	12	73	79	6
White sweet potato [*Ipomoea batatas* (L.) Lam.]	8	35	73	79.5	6.5
White yam (*Dioscorea alata* L.)	14	50	73	81	8
Taro [*Caladium colocasia* (L.) W. F. Wight]	1	5	73	77	4
Sweet potato [*Ipomoea batatas* (L.) Lam.]	4	29	72.5	80	7.5
Arrowroot (*Maranta arundinacea* L.)	7	49	74	96	22
Green plantain (*Musa paradisiaca* L.)	13	59	75	96	21
Wheat (*Triticum æstivum* L.)	2	35	55	94	39
Barley (*Hordeum vulgare* L.)	3	37	56	94	38
Oats (*Avena sativa* L.)	2	18	57	93	36
Rice (*Oryza sativa* L.)	4	12	59	92	33
White potato (*Solanum tuberosum* L.)	7	80	62	97	35
Corn (*Zea mays* L.)	4	22	65	96	31

Microscopic examination at 5° C. intervals indicate that with tropical starches the granules are ruptured completely in almost all cases below a temperature of 85° C., while white potato, cassava, wheat, corn, rice, and barley, on the contrary, show many swollen but unruptured granules even at 90° to 95° C. The interesting photomicrographs of Sjostrom (*5*) bear out this observation, showing the swelling and disintegration of sweet potato and canna, at temperatures lower than that of corn and wheat.

The importance of the distinction between the starches of northern and tropical origin has apparently a correlation in the ability of patients suffering from the tropical disease, sprue, to digest and assimilate starches from various sources. This phase of the problem will be discussed in a paper soon to be published.

Certain starches, such as cassava, white potato, and the starch of the green plantain (*Musa paradisiaca* L.), give curves which are intermediate in character between those of the northern and main tropical starches investigated (Figure 2). This brought out a curious observation which will require further investigation to verify completely. Starch from white potatoes grown in Puerto Rico seems to give a curve more like the other tropical starches than starch from the same variety of potato grown in the north. It is possible that acclimatization of the plant may bring about changes in the physical and chemical properties of such a complex material as starch.

Some 30 varieties of starch have been run by the photoelectric method; the transition points vary from 48° to 78° C., but all produce curves of the three types illustrated in Figure 2. Most fall in the true tropical or northern group curves, with 3 or 4 in the intermediate cassava or white potato group.

Table I gives the granule size, temperature of the transition point, and the temperature at which no further increase of transparency occurs with rising temperature. The difference column is simply a measure of the slope of the gelatinization curve and indicates that the starches can be grouped in three classes: those with a temperature difference up to 10° C.; those of the intermediate class in the 20° to 22° C. range; and the third, mostly composed of northern starches, with differences of 30° to 40° C. for completion of gelatinization.

The effects of gelatinizing agents such as acids, alkalies, sodium thiocyanate, and calcium chloride have been tested by the photoelectric method, and in general, their effect is to increase the temperature of the transition point, and in the case of the intermediate and northern group starches, greatly increase the rate of gelatinization. By means of this method the effects of hydrolytic and gelatinizing agents can be followed, since it continuously measures changes which may be invisible to the eye and which can be measured qualitatively by that organ only after greater time and temperature intervals. It also offers a ready means of determining the lowest temperatures at which the starch granule begins to swell and become more transparent, under the action of either heat and water or solutions of various gelatinizing agents.

This method may have some industrial application, since it gives reproducible results with any given starch and is sensitive to various pretreatments that the sample may undergo during the manufacturing process.

Literature Cited

(1) Barrett, O. W., *J. Dept. Agr. Porto Rico*, **9**, 61 (1925).
(2) Caesar, G. V., Ind. Eng. Chem., **24**, 1432 (1932).
(3) Müller, R. H., *Mikrochemie*, **11**, 353 (1932).
(4) Reichert, E. T., "Differentiation and Specificity of Starches in Relation to Genera, Species, etc.," Part I, Washington, D. C., Carnegie Institution of Washington, 1913.
(5) Sjostrom, O. A., Ind. Eng. Chem., **28**, 63 (1936).
(6) Taylor, T. C., private communication.
(7) Taylor, T. C., and Schoch, T. J., *J. Am. Chem. Soc.*, **55**, 4248 (1933).

Received February 15, 1937.

Determination of Sugars in Plants

By Oxidation with Ferricyanide and Ceric Sulfate Titration

W. Z. HASSID, Division of Plant Nutrition, University of California, Berkeley, Calif.

In a previous paper the writer (*1*) published a method for the determination of sugars in plants by oxidation with potassium ferricyanide and titration with ceric sulfate, using *o*-phenanthroline ferrous sulfate as an indicator. Further observation showed that in some cases certain plant extracts presented difficulty in obtaining a distinct end point with this indicator, especially when the amount of reducing sugar in the sample was small and a large excess of the ferricyanide was left in solution after oxidation of the sugar.

The difficulty was remedied by using Setopaline C instead of *o*-phenanthroline ferrous sulfate and by modifying the concentration of the alkaline ferricyanide solution. In order to avoid a large excess of ferricyanide when the quantity of reducing sugars in the sample was small, the amount of the alkaline ferricyanide used for the oxidation was reduced. This modified method is applicable to quantities between 0.3 and 3.5 mg. of reducing sugars.

Reagents

Indicator. Setopaline C (0.1 gram) is dissolved in 100 cc. of water and 7 to 10 drops of the indicator are used for the titration. The end point is a sharp change from pale green to a golden brown. The indicator consumes practically no ceric sulfate: 1 drop of 0.01 *N* ceric sulfate is sufficient to impart a golden brown color to the blank. (Setopaline C is manufactured in Switzerland and its formula at present is a trade secret. It may be obtained through Eimer & Amend, New York, N. Y., at a very small cost.)

Alkaline Potassium Ferricyanide. A mixture of 8.25 grams of potassium ferricyanide and 10.6 grams of sodium carbonate is dissolved in cold water and made up to 1 liter. The solution is poured into a dark bottle and kept in a cool place, preferably in a refrigerator above freezing. Quantities of the solution are taken out as needed.

Ceric Sulfate. A 0.25 *N* ceric sulfate stock solution is made as follows: 75.5 grams of ceric sulfate (55 per cent pure) are placed in about 300 cc. of water to which 30 cc. of concentrated sulfuric acid have been added. The mixture is heated on a steam bath until all of the ceric sulfate is dissolved. The solution is filtered, cooled, and made up to 500 cc.

The ceric sulfate is conveniently standardized against a 0.1 *N* solution of ferrous ammonium sulfate (Mohr's salt). This standard solution is made up by dissolving 39.214 grams of the salt in about 300 cc. of water, to which 25 cc. of 1 to 1 sulfuric acid have been added, and diluting to 1 liter. The Mohr's salt, $Fe(NH_4)_2(SO_4)_2 \cdot 6H_2O$, must be of high purity suitable for use as an analytical standard.

Fifteen cubic centimeters of the approximately 0.25 *N* ceric sulfate solution are diluted with 50 cc. of water and 3 cc. of 1 to 1 sulfuric acid and titrated with the 0.1 *N* standard Mohr's solution until the color of the ceric sulfate is almost bleached out.

Eight drops of Setopaline C indicator solution are then added and the titration is continued to a sharp change from golden brown to a light yellow color.

A 0.01 N solution of ceric sulfate is made up for the use of sugar analysis by diluting 20 cc. of the 0.25 N stock solution and 50 cc. of 1 to 1 sulfuric acid to 500 cc. The 0.01 N ceric sulfate solution may also be standardized against Mohr's salt. A 0.01 N standard solution of the ferrous ammonium sulfate should be used for this purpose. The stock solution is kept in a cool place and the dilute 0.01 N ceric sulfate is made up as needed.

Procedure

The plant extract is clarified as previously described (*1*). Five cubic centimeters of the clarified solution containing not more than 3.5 mg. of reducing sugar are mixed with 5 cc. of the alkaline ferricyanide in a 145 × 28 mm. Pyrex glass test tube. The tube is heated in a boiling water bath or immersed in a steam bath and heated for exactly 15 minutes. The tube with the contents is then cooled to room temperature by immersing in running water for about 3 minutes. Five cubic centimeters of 5 N sulfuric acid are added and the contents are mixed by shaking the tube. Seven to 10 drops of the Setopaline C indicator are introduced and titrated with the 0.01 N ceric sulfate from a 10-cc. buret until a golden brown color appears. Estimations are conveniently carried out in batches of eight.

The ceric sulfate used is standardized against a pure grade of glucose by the same procedure, using 5-cc. aliquots of solution containing known amounts of the sugar. From the titration of pure glucose the number of cubic centimeters of ceric sulfate equivalent to 1 mg. of glucose is calculated. It was found that 3.00 cc. of 0.01 N ceric sulfate solution are equivalent to 1 mg. of glucose. It is convenient to have on hand a solution of pure 1 per cent glucose made up in 0.25 per cent benzoic acid. When prepared in this way the glucose will keep for several months. Whenever needed, a few cubic centimeters of this standard solution are diluted to the proper strength and used for standardization of the dilute ceric sulfate solution. Standardization of the ceric sulfate solution against glucose is necessary whenever it is made from the 0.25 N stock solution.

Literature Cited

(1) Hassid, W. Z., Ind. Eng. Chem., Anal. Ed., 8, 138 (1936).

Received March 15, 1937.

Turbidity in Sugar Products

V. Color and Turbidity of Hard Refined Sugars

F. W. ZERBAN and LOUIS SATTLER, New York Sugar Trade Laboratory, New York, N. Y.

THE previous two articles of this series (*3*, *5*) dealt with the determination of coloring matter and turbidity in raw cane sugars. This investigation has now been extended to hard refined sugars. Of the twenty-nine samples examined, twenty-six were granulated cane sugars, two were powdered cane sugars, and one was a beet sugar. Three analytical procedures were used in this work: (1) Balch; (2) Zerban, Sattler and Lorge; (3) Landt and Witte.

Balch Method

In the method of Balch (*1*) a 60-Brix solution of the sugar is prepared, and a portion of it is filtered. The unfiltered solution is read in the spectrophotometer against the filtered solution at one or more wave lengths, and the result is expressed in terms of the specific absorptive index, $-\log t$. The concentration of the coloring matter is found by reading the filtered solution against water, and converting the result also into $-\log t$.

In applying this method to white sugars, the writers used the same filtering materials as before: Celite analytical filter aid, specially prepared asbestos, and purified silica gel.

Since hard refined sugars contain very little coloring matter and turbidity, long absorption cells must be employed. The cells used by the writers were 100 mm. in length, the maximum available for the Keuffel and Esser spectrophotometer. Still longer cells would be preferable. The readings were taken at wave length 529 mμ, in order to permit direct comparison with the measurements made according to the other two procedures.

Zerban, Sattler, and Lorge Method

In the method of Zerban, Sattler, and Lorge (*4*) the transmittancy, T, and the Tyndall beam intensity, R, of the unfiltered 60-Brix solution are measured with the Pulfrich photometer in a 2.5-mm. cell. R is expressed in per cent of the Tyndall beam intensity of the standard turbid glass block of the instrument. Color filters are used for measurements at various wave lengths.

The concentration of turbidity, N, and of coloring matter C, are then found by means of Equations 1 and 2.

$$R = aNk^{-C} \quad (1)$$

$$-\log T = N + C \quad (2)$$

The numerical values of the constants a and k are given in the paper referred to (*4*). In practice it is easier to find N and C from a graph based on the two equations rather than by calculation. N and C are thus expressed in terms of $-\log T$ for a 60-Brix solution and a cell thickness of 2.5 mm. In refined white sugars the color is generally so close to zero that the expression k^{-C} in Equation 1 is almost equal to unity, and N becomes directly proportional to R, or nearly so.

An attempt was made to measure the Tyndall beam intensity of the refined sugar solutions in the cells of 2.45- and 2.46-mm. thickness, previously used in raw sugar work, but the turbidity was so small and the correction for the turbidity of the water used for dissolving the sugar was relatively so large that reliable results could not be obtained. The measurements were therefore repeated in a 26-mm. Zechmeister beaker, the effective depth of which is 16.3 mm. The transmittancy of the unfiltered solutions was measured in a 100-mm. tube with the spectrophotometer, the same figure being used as in the method of Balch. The results for $-\log T_{100}$ and for $R_{16.3}$ are shown in Table I, columns 2 and 3, respectively, for wave length 529 mμ.

In order to calculate N and C from $-\log T$ and R by means of Equations 1 and 2, it was necessary first to reduce $-\log T_{100}$ and $R_{16.3}$ to a depth of 2.455 mm. It was found that over such a wide range of thickness the optical density, D ($= -\log T$), is not directly proportional to the depth, b, but a power function of it, according to the equation

$$D_1 : D_2 = (b_1 : b_2)^n \quad (3)$$

The exponent n was found to equal 0.955. Consequently, $-\log T_{100}$ had to be multiplied by 0.02901 to reduce it to $-\log T_{2.455}$. Similarly, $R_{16.3}$ had to be multiplied by 0.16401.

Table I. Experimental Data and Calculated Values for Methods of Zerban, Sattler, and Lorge, and of Landt and Witte

1	2	3	4	5	6	7	8	9
No.	$-\log T$, 100 mm.	$R = 100\ A$, 16.3 mm.	$-\log T$, 2.455 mm.	$\log R$, 2.455 mm.	N, 2.455 mm.	C, 2.455 mm.	f_k, 16.3 mm.	Absolute Turbidity, Landt and Witte
1	0.1757	73.49	0.0051	1.0811	0.0021	0.0030	1.106	0.0023
2	0.2746	179.70	0.0080	1.4694	0.0049	0.0031	1.171	0.0059
3	0.1634	65.85	0.0047	1.0334	0.0018	0.0029	1.098	0.0020
4	0.0415	25.58	0.0012	0.6228	0.0007	0.0005	1.026	0.0007
5	0.0901	23.45	0.0026	0.5850	0.0006	0.0020	1.053	0.0007
6	0.2409	138.49	0.0070	1.3563	0.0038	0.0032	1.149	0.0045
7	0.1428	135.40	0.0041	1.3465	0.0038	0.0003	1.086	0.0042
8	0.0992	40.03	0.0029	0.8173	0.0012	0.0017	1.059	0.0012
9	0.1307	55.44	0.0038	0.9587	0.0015	0.0023	1.079	0.0017
10	0.2577	94.71	0.0075	1.1913	0.0027	0.0048	1.160	0.0031
11	0.0832	35.26	0.0024	0.7621	0.0010	0.0014	1.049	0.0010
12	0.1036	60.43	0.0030	0.9961	0.0017	0.0013	1.062	0.0018
13	0.1025	53.85	0.0030	0.9460	0.0015	0.0015	1.060	0.0016
14	0.4250	65.51	0.0123	1.0312	0.0019	0.0104	1.277	0.0024
15	0.1574	162.10	0.0046	1.4246	0.0044	0.0002	1.094	0.0050
16	0.1331	96.28	0.0039	1.1984	0.0028	0.0011	1.080	0.0029
17	0.1262	102.70	0.0037	1.2264	0.0029	0.0008	1.075	0.0031
18	0.0965	58.84	0.0028	0.9845	0.0017	0.0011	1.057	0.0018
19	0.1662	101.55	0.0048	1.2215	0.0028	0.0020	1.100	0.0032
20	0.0904	51.41	0.0026	0.9259	0.0014	0.0012	1.053	0.0015
21	0.0766	74.00	0.0022	1.0841	0.0020	0.0002	1.044	0.0022
22	0.0918	71.70	0.0027	1.0704	0.0019	0.0008	1.054	0.0021
23	0.0443	46.93	0.0013	0.8863	0.0013	0.0000	1.025	0.0014
24	0.2377	235.21	0.0069	1.5863	0.0064	0.0005	1.146	0.0076
25	0.1785	88.23	0.0052	1.1605	0.0025	0.0027	1.108	0.0028
26	0.0935	69.13	0.0027	1.0545	0.0019	0.0008	1.055	0.0021
27	0.1347	94.11	0.0039	1.1885	0.0027	0.0012	1.081	0.0029
28	0.1952	112.73	0.0057	1.2669	0.0032	0.0025	1.118	0.0036
29	0.1638	115.12	0.0048	1.2760	0.0033	0.0015	1.099	0.0036

The values of $-\log T_{2.455}$ and of $R_{2.455}$, calculated in this manner, are given in columns 4 and 5 of Table I. The corresponding values of N and C were next found from a greatly enlarged graph, similar to that shown in Figure 1 of Part II of this series (*4*), and the results are given in columns 6 and 7 of Table I.

Landt and Witte Method

In the method of Landt and Witte (*2*) the turbidity alone is determined with the Pulfrich photometer, in the same manner as in the procedure of Zerban, Sattler, and Lorge. The Tyndall beam intensity is expressed as A, which is equal to 0.01 R. The so-called "absolute" turbidity is then calculated by the formula

$$\text{Absolute turbidity} = A \times f_k \times D \times t \qquad (4)$$

where f_k is a correction factor which is a function of the transmittancy. The values of this factor are shown in Table I, column 8, for each of the 29 samples. D is a factor varying with the depth of layer used. For the 26-mm. Zechmeister beaker D equals 1. t is the absolute turbidity of the standard glass block—i. e., the Tyndall beam intensity—for a 1-cm. depth of layer, expressed as a fraction of the incident light intensity, under the assumption that the primary light is completely scattered, and that there is no multiple reflection. The t of the glass block used in this investigation, for wave length 529 mμ, is 0.00282. The absolute turbidities of the sugar solutions, calculated by means of Equation 4, are shown in Table I, column 9.

Comparative Results

In order to make a direct comparison between the results obtained by methods 1 and 2, it is necessary to reduce them all to a common basis, and the specific absorptive index, $-\log t$, was chosen for this purpose. The results of the method of Landt and Witte cannot be converted directly into $-\log t$, but the relationship between the two will be discussed.

The $-\log T$ values for the total absorption and for that due to turbidity alone, obtained by Balch's method with 60-Brix solutions and a 100-mm. tube, were reduced to 1-cm. thickness by multiplying by 0.11092 ($0.1^{0.955}$), and to a concentration of 100 grams in 100 ml. by multiplying by 1.296. Beer's law was assumed to hold within the limits of error, for the increase in concentration was only about 30 per cent. The concentration of coloring matter was then found by deducting the turbidity, expressed as $-\log t$, from the total $-\log t$ of the unfiltered solution. The turbidity and coloring matter, calculated in this manner, are shown in Table II, columns 2 to 7, for filtration with Celite, asbestos, and silica gel, respectively.

The $-\log T$ and N values, obtained by method 2 for a cell thickness of 2.455 mm. and 60-Brix concentration, were similarly converted into $-\log t$, multiplying by 3.8238 ($4.0734^{0.955}$), and the product by 1.296. The C values were again found by difference. The N and C figures are given in Table II, columns 8 and 9.

The absolute turbidities, found by the Landt and Witte method, were multiplied by 1.296, to base them also on a concentration of 100 grams in 100 ml., and the values thus calculated are shown in Table II, column 10.

A comparison of the results obtained with the three filtering materials confirms the previous findings with raw sugars. The color concentration, arrived at by asbestos filtration, averages higher than that found by Celite filtration, and silica gel gives the lowest average color figures, but in many individual cases filtration with asbestos results in lower color values than filtration with Celite. Silica gel gives lower color figures than asbestos in all cases but one, and lower ones than Celite in all but four.

In the preceding paper, dealing with raw sugars, it was shown that the discrepancies in the results obtained with the three filtering agents may be explained by their selective effect. All remove both turbidity and coloring matter, but to a varying degree, depending on particle size. The same is true for white sugars.

Table II also shows that the method of Zerban, Sattler, and Lorge, employing only unfiltered solutions for the measurements, usually gives lower turbidity values and correspondingly higher color values than the filtration methods. In a few individual cases the reverse is true. Both higher and lower color values may be explained by the selective effect of the filtering agents. In the former case the filtering material removes relatively more coloring matter from the solution; in the latter a relatively large portion of the turbidity goes into the filtrate, and, causing absorption, is registered as coloring matter.

It remains to inquire whether the methods utilizing the transmittancy and Tyndall beam intensity of unfiltered solutions give a reliable measure of the color and turbidity, for white sugars at least. Information on this point may be obtained by a comparison between the results of the method of Zerban, Sattler, and Lorge and that of Landt and Witte. The latter method has a sound theoretical foundation when coloring matter is absent or very small in quantity, as is the case with white sugars. Under these conditions the turbidity

concentration is practically proportional to the Tyndall beam intensity, but a correction must be applied for absorption.

Table II. Comparison of Results with Filtered and Unfiltered Solutions[a]

1	2	3	4	5	6	7	8	9	10
	Celite		Asbestos		Silica Gel				Landt and Witte
No.	Turbidity	Color	Turbidity	Color	Turbidity	Color	N	C	Turbidity
1	0.0183	0.0070	0.0176	0.0077	0.0203	0.0050	0.0104	0.0149	0.0030
2	0.0359	0.0036	0.0361	0.0034	0.0394	0.0001	0.0242	0.0153	0.0077
3	0.0165	0.0070	0.0136	0.0099	0.0192	0.0043	0.0090	0.0145	0.0026
4	0.0041	0.0019	0.0018	0.0042	0.0047	0.0013	0.0035	0.0025	0.0010
5	0.0094	0.0036	0.0098	0.0032	0.0177	0.0013	0.0030	0.0100	0.0009
6	0.0275	0.0071	0.0297	0.0049	0.0307	0.0039	0.0190	0.0156	0.0058
7	0.0179	0.0026	0.0178	0.0027	0.0183	0.0022	0.0190	0.0015	0.0054
8	0.0098	0.0045	0.0101	0.0042	0.0102	0.0041	0.0059	0.0084	0.0016
9	0.0162	0.0026	0.0150	0.0038	0.0163	0.0025	0.0074	0.0114	0.0022
10	0.0336	0.0035	0.0303	0.0068	0.0331	0.0040	0.0134	0.0237	0.0040
11	0.0077	0.0043	0.0089	0.0031	0.0096	0.0024	0.0050	0.0070	0.0014
12	0.0134	0.0015	0.0138	0.0011	0.0134	0.0015	0.0084	0.0065	0.0024
13	0.0115	0.0032	0.0123	0.0024	0.0130	0.0017	0.0073	0.0073	0.0021
14	0.0549	0.0062	0.0517	0.0094	0.0555	0.0056	0.0094	0.0517	0.0031
15	0.0196	0.0030	0.0168	0.0058	0.0210	0.0016	0.0216	0.0010	0.0065
16	0.0153	0.0038	0.0140	0.0051	0.0171	0.0020	0.0137	0.0054	0.0038
17	0.0154	0.0027	0.0165	0.0016	0.0175	0.0006	0.0142	0.0039	0.0040
18	0.0113	0.0026	0.0103	0.0036	0.0117	0.0022	0.0085	0.0054	0.0023
19	0.0197	0.0042	0.0175	0.0064	0.0203	0.0036	0.0137	0.0102	0.0041
20	0.0095	0.0035	0.0070	0.0060	0.0114	0.0016	0.0070	0.0060	0.0020
21	0.0103	0.0007	0.0080	0.0030	0.0107	0.0003	0.0100	0.0010	0.0028
22	0.0127	0.0005	0.0117	0.0015	0.0130	0.0002	0.0093	0.0039	0.0028
23	0.0062	0.0002	0.0035	0.0029	0.0055	0.0009	0.0064	0.0000	0.0018
24	0.0307	0.0034	0.0290	0.0051	0.0312	0.0029	0.0316	0.0025	0.0099
25	0.0219	0.0037	0.0214	0.0042	0.0243	0.0013	0.0123	0.0133	0.0036
26	0.0074	0.0060	0.0086	0.0048	0.0087	0.0047	0.0094	0.0040	0.0027
27	0.0148	0.0045	0.0113	0.0080	0.0155	0.0038	0.0133	0.0060	0.0037
28	0.0220	0.0060	0.0187	0.0093	0.0223	0.0057	0.0158	0.0122	0.0046
29	0.0206	0.0030	0.0173	0.0063	0.0202	0.0034	0.0164	0.0072	0.0046
Av.	0.0177	0.0037	0.0166	0.0048	0.0188	0.0026	0.0120	0.0094	0.0035

[a] Results are expressed as $-\log t$, except for the Landt and Witte method, where they are given as absolute turbidity for a concentration of 100 grams of solids in 100 ml. of solution.

This is done in the method of Landt and Witte by multiplying by the f_k factor, derived from theory, and in that of Zerban, Sattler, and Lorge by the use of the empirical formulas 1 and 2, based on experimental evidence. If the two methods give the same results, when reduced to a common basis, this constitutes strong presumptive evidence that these results are correct. An examination of the figures given in Table II, columns 8 and 10, shows that there is a nearly constant ratio, averaging 3.47, between the N values and the absolute turbidities. Table III, column 3, shows the values obtained by multiplying the absolute turbidity by this factor 3.47. The results check closely with those found directly by the method of Zerban, Sattler, and Lorge (column 2), and the averages agree within 1.6 per cent.

The largest percentage discrepancies between N found directly, and N calculated from the absolute turbidity, are found in samples 14 and 2. Both samples show high total absorption, as may be seen from Table I, column 2. Under this condition the f_k values of Landt and Witte are evidently a little too high, and the theoretical assumptions on which they are based no longer hold strictly. As a matter of fact, a closer analysis of the figures in columns 8 and 10 of Table II shows that the ratio between N found and N calculated decreases from 3.70 to 3.22 with an increase in the absolute turbidity from 0 to 0.01. N has been calculated from the absolute turbidity by this varying ratio also, and the results are shown in column 5 of Table III. The individual values as well as the average value of N calculated in this manner check with the found values only slightly better than those obtained by means of the average ratio 3.47, and nothing is gained in practice by using the sliding ratio for calculating N from the absolute turbidity of white sugars.

While the results of the method of Zerban, Sattler, and Lorge are confirmed by those of the Landt and Witte method, both give an exact measure of the turbidity concentration only if the distribution of particles of different size, shape, etc., is always the same. In the method of Zerban, Sattler, and Lorge, the distribution must be the same as in the standard sugar used by the writers to establish their formulas 1 and 2. It stands to reason that this condition is the exception rather than the rule, and it follows that the method of the writers, using unfiltered solutions, does not give absolute figures for color and turbidity any more than the filtration methods, and that the results are in both cases merely comparative. However, the time required for an analysis by the method of Zerban, Sattler, and Lorge is much shorter because the tedious filtration process is avoided, while the number of optical observations is the same in both methods. The only drawback of the method without filtration is that the measurements of Tyndall beam intensity must be made with the greatest care and attention to details, as has been pointed out by Landt and Witte as well as by the writers.

Since both turbidity and coloring matter absorb light selectively and differ merely in degree of dispersion, a line of demarcation must be drawn arbitrarily, and either any one of the filtration methods or the method of the writers may be chosen for this purpose. This applies to raw sugars also, and in the light of the results recently obtained by the writers there is no need to use unfiltered solutions for turbidity determination and filtered solutions for color determination in raw sugars, as previously proposed, because it is now known that the color determined after previous filtration is no more reliable than that derived, by the method of the writers, from the Tyndall beam intensity and transmittancy of the unfiltered solution. The method of Landt and Witte cannot be used for this purpose on raw sugars, because the assumptions on which the f_k values of these authors are based, while

Table III. Comparison between N, as $-\log t$, Found Directly and Calculated from Absolute Turbidity, by Average and by Variable Ratio

No.	N, Found by Zerban and Sattler	N, Calcd. by Average Ratio 3.47	Deviation %	N, Calcd. by Variable Ratio	Deviation %
1	0.0104	0.0103	−1.0	0.0105	+1.0
2	0.0242	0.0267	+10.3	0.0254	+5.0
3	0.0090	0.0092	+2.2	0.0094	+4.4
4	0.0035	0.0033	−5.7	0.0035	0.0
5	0.0030	0.0032	+6.7	0.0033	+10.0
6	0.0190	0.0202	+6.3	0.0198	+4.2
7	0.0190	0.0187	−1.6	0.0184	−3.2
8	0.0059	0.0054	−8.5	0.0056	−5.1
9	0.0074	0.0076	+2.7	0.0078	+5.4
10	0.0134	0.0136	+1.5	0.0140	+4.5
11	0.0050	0.0047	−6.0	0.0049	−2.0
12	0.0084	0.0081	−3.6	0.0084	0.0
13	0.0073	0.0073	0.0	0.0075	+2.7
14	0.0094	0.0106	+12.8	0.0108	+14.9
15	0.0216	0.0225	+4.2	0.0218	+0.9
16	0.0137	0.0132	−3.6	0.0133	−2.9
17	0.0142	0.0140	−1.4	0.0140	−1.4
18	0.0085	0.0079	−7.1	0.0081	−4.7
19	0.0137	0.0141	+2.9	0.0142	+3.6
20	0.0070	0.0069	−1.4	0.0071	+1.4
21	0.0100	0.0098	−2.0	0.0100	0.0
22	0.0093	0.0096	+3.2	0.0098	+5.4
23	0.0064	0.0061	−4.7	0.0063	−1.6
24	0.0316	0.0341	+7.9	0.0318	+0.6
25	0.0123	0.0124	+0.8	0.0126	+2.4
26	0.0094	0.0092	−2.1	0.0094	0.0
27	0.0133	0.0129	−3.0	0.0130	−2.3
28	0.0158	0.0159	+0.6	0.0159	+0.6
29	0.0164	0.0161	−1.8	0.0160	−2.4
Av.	0.01200	0.01219	±4.0	0.01216	±3.2

holding for sugars with little or no coloring matter, do not apply when large quantities of coloring matter are present. The experiments of the writers have shown that even with white sugars f_k is slightly too high when absorption is high, and that with dark raw sugars it becomes so much too high that absolute turbidities greatly in excess of 1 are found, which is an impossibility, since the intensity of the scattered or reflected light cannot be greater than that of the incident light. But the objections to the method of Landt and Witte in the case of raw sugars do not apply to that of Zerban, Sattler, and Lorge, which is based on experiments with high concentrations of both turbidity and coloring matter, and is therefore applicable to raw as well as to white sugars.

In this simplified method, without any filtration whatever, the "quality index" (*5*) loses its meaning, being equal to 1 in all cases. The nature of the turbidity may be characterized by making measurements at different wave lengths and calculating the dispersion quotients; that of the coloring matter may be similarly defined by the Q- or R-ratios of Peters. Further refinements may be introduced by independent measurement of the various particle properties, but for routine purposes this would hardly be necessary.

The suggestion is again advanced that the International Commission for Uniform Methods of Sugar Analysis undertake a comparative study of the various methods proposed and recommend one for general adoption.

Summary and Conclusions

The previous investigation on raw cane sugars has been extended to hard refined sugars. A comparison has been made between the method of Balch, in which the turbidity and coloring matter are found from the transmittancy of the solution before and after filtration, and the method of the writers, in which both are calculated from the transmittancy and Tyndall beam intensity of the unfiltered solution. The method of Landt and Witte for determining turbidity has also been included in this study.

The previous finding, that filtering agents act selectively, has been confirmed. Generally, Celite gives lower color values than asbestos, and silica gel still lower ones; the opposite is true for the turbidity figures. But there are exceptions to this rule, depending on the nature of the turbidity and of the coloring matter. The method of the writers usually gives higher color values than any of the filtration methods. While this also indicates that the filtering agents remove coloring matter, it must be considered that both turbidity and coloring matter absorb light selectively and that any line of demarcation between the two must necessarily be arbitrary. The choice between the two types of methods thus becomes a matter of agreement. The method without filtration has the advantage of greater speed, but requires greater care in manipulation. It is suggested that the decision be left to the International Commission for Uniform Methods of Sugar Analysis.

Literature Cited

(1) Balch, Ind. Eng. Chem., Anal. Ed., 3, 124 (1931).
(2) Landt and Witte, *Z. Ver. deut. Zuckerind.*, 84, 450 (1934).
(3) Zerban and Sattler, Ind. Eng. Chem., Anal. Ed., 8, 168 (1936).
(4) Zerban, Sattler, and Lorge, *Ibid.*, 6, 178 (1934).
(5) *Ibid.*, 7, 157 (1935).

Received December 30, 1936. Presented before the Division of Sugar Chemistry at the 93rd Meeting of the American Chemical Society, Chapel Hill, N. C., April 12 to 15, 1937.

Estimation of Potassium in Silicates and Soils

A Low-Melting Alkali Carbonate Flux

J. E. GIESEKING and H. J. SNIDER, University of Illinois, Urbana, Ill.

DIFFICULTIES in completely decomposing highly aluminous minerals by the J. Lawrence Smith fusion (*2*) have been pointed out by Lamar, Hazel, and O'Leary (*1*), and have been experienced by the present authors in working with soils, clays, and similar materials. This led to the search for a more desirable flux, which, to be suitable for potassium determinations in silicates, (1) should have a low melting point, (2) should be reactive with silicates at the melting point, and (3) must not leave a residue of salts difficult to separate from potassium. A mixture of two parts of sodium carbonate and one part of lithium carbonate was found to have these characteristics, if potassium is determined by the cobaltinitrite method. This flux appears to be very similar to the composition of a eutectic compound of sodium and lithium carbonates. It melts between 470° and 480° C. and is very effective in decomposing soil silicates at temperatures between 500° and 600° C. Sodium and lithium salts do not interfere with the determination of potassium by the cobaltinitrite method.

The following experimental procedure was applied to a number of soils in connection with the potassium determination:

A 1-gram sample of 100-mesh soil is weighed into a 40-ml. platinum crucible. In order to destroy the organic matter in the sample, 0.5 to 1 ml. (depending on organic matter content) of concentrated perchloric acid is added. The crucible is placed on a hot plate and heated until the last trace of perchloric acid is removed. To the sample, free of organic matter, are added 8 grams of a mixture of 2 parts sodium carbonate and 1 part lithium carbonate. The sample and carbonates are mixed thoroughly by means of a glass rod and then covered with an additional gram of the carbonate mixture. The crucible is covered and the sample is fused in a muffle furnace at a temperature betweeen 500° and 600° C., this temperature being maintained until all bubbling has ceased.

The crucible is removed from the furnace and given a rotary motion to distribute the fused mass on the sides of the crucible during solidification, thus facilitating the removal of the cake which, after cooling, is placed in a 250-ml. beaker. The cake and residue left in the crucible are dissolved together (in a covered beaker) by adding 25 ml. of water and 50 ml. of 6 N hydrochloric acid. A shell of silica will form on the cake, which must be broken off from time to time to hasten solution of the inner portion. If it dissolves too slowly the beaker may be placed on a steam bath.

After the carbonates have completely dissolved from the cake, the crucible and lid are washed and removed from the beaker and the contents are taken to dryness on the steam bath. The residue is treated with 10 ml. of concentrated perchloric acid and taken to dryness on the hot plate. The perchloric acid treatment is repeated with the addition of 1.0 ml. of concentrated hydrochloric acid and 0.5 ml. of concentrated nitric acid to ensure complete dehydration of the silica and decomposition of a trace of ammonium salts which might be present. The residue is treated

Table I. Recovery of Potassium after Fusion with Sodium and Lithium Carbonate

Potassium Added	Potassium Recovered
Gram	*Gram*
0.00143	0.00141
0.00143	0.00146
0.00143	0.00143
0.00143	0.00141
0.00143	0.00145

Table II. Potassium Remaining in Silica Residue from Sodium-Lithium Carbonate Fusion

Source of Sample	Potassium Found[a] Silica residue	Filtrate from silica residue	Total potassium[b]
	%	%	%
Purdue University, Soils Department	0.33	1.24	1.57
	0.31	1.27	1.58
	0.34	1.24	1.58
	0.32	1.27	1.59
Bureau of Chemistry and Soils	0.32	1.04	1.36
	0.32	1.04	1.36
	0.30	1.04	1.34
	0.31	1.01	1.32
	0.32	1.04	1.36
Illinois Experiment Station, sample 5767	0.37	1.53	1.90
	0.37	1.53	1.90
	0.32	1.53	1.85
Illinois Experiment Station, sample 5788	0.33	1.56	1.89
	0.32	1.56	1.88
	0.32	1.56	1.88
	0.33	1.56	1.89
	0.39	1.56	1.95
U. S. Bureau of Standards, sample 97	0.03	0.42	0.45
	0.03	0.49	0.52
	0.03	0.46	0.49
	0.03	0.46	0.49
	0.03	0.46	0.49
U. S. Bureau of Standards, sample 98	0.07	2.67	2.74
	0.08	2.64	2.72
	0.10	2.67	2.77
	0.10	2.64	2.74
	0.09	2.70	2.79

[a] Per cent of dry sample.
[b] Blank, 0.003 per cent.

Table III. Comparison of Sodium-Lithium Carbonate with J. Lawrence Smith Fusion on Soils

Source of Sample		Potassium Found J. L. Smith	Na_2CO_3–Li_2CO_3	Average Difference	Per Cent Difference
		%	%		
Purdue University,[a] Soils Department		1.47	1.57		
		1.49	1.58	0.10	6.8
			1.58		
			1.59		
	Av.	1.48	1.58		
Bureau of Chemistry and Soils[b]		1.27	1.36		
		1.39	1.36	0.06	4.7
		1.30	1.34		
		1.27	1.32		
		1.21	1.38		
		1.30			
	Av.	1.29	1.35		
Illinois Experiment Station, sample 5760		1.91	2.16		
		1.87	2.09	0.25	13.2
			2.12		
			2.18		
	Av.	1.89	2.14		
Illinois Experiment Station, sample 5767		1.36	1.90		
		1.32	1.90	0.54	40.3
			1.85		
			1.86		
	Av.	1.34	1.88		
Illinois Experiment Station, sample 5788		1.65	1.89		
		1.61	1.88	0.27	16.6
			1.88		
			1.89		
			1.95		
	Av.	1.63	1.90		
U. S. Bureau of Standards, sample 97		0.45	0.45		
		0.46	0.52	0.04	8.9
		0.46	0.49		
		0.42	0.49		
		0.47	0.49		
	Av.	0.45	0.49		
U. S. Bureau of Standards, sample 98		2.64	2.74		
		2.57	2.72	0.12	4.6
		2.70	2.77		
		2.62	2.74		
		2.60	2.79		
		2.67			
	Av.	2.63	2.75		

[a] Sample furnished by G. H. Enfield.
[b] Sample furnished by W. O. Robinson.

with 25 to 50 ml. of 5 per cent hydrochloric acid and heated on the steam bath for a few minutes.

After the crust of iron salts has dissolved, the solution is filtered, and the residue of silica is washed twice with 2 *N* hydrochloric acid, and with hot water until free of chlorides. The filter paper, after removing the dried silica, is ignited in a platinum crucible. The silica is added to the residue in the crucible, moistened with 2 ml. of water and 3 drops of perchloric acid, and 5 ml. of hydrofluoric acid are added. The contents of the crucible are taken to dryness in a well-ventilated hood. This acid treatment is repeated without the addition of water. The residue left in the crucible is dissolved in 2 ml. of hot 5 per cent hydrochloric acid and the resulting solution is added to the filtrate from the silica. The filtrate is evaporated until salts begin to crystallize, and is then transferred to a 100-ml. volumetric flask and made up to volume. From this volume 10-ml. aliquots are taken, the excess acid is neutralized with 10 per cent sodium hydroxide, using phenolphthalein as an indicator, and after the addition of 10 ml. of 0.15 *N* acetic acid, potassium is determined by the cobaltinitrite method of Volk and Truog (*3*). The remainder of the solution may be used for the determinations for which the sodium carbonate fusion is applicable.

Experimental Results

To determine the effect of the salts left by the carbonate fusion mixture on the potassium determination, a known amount of potassium sulfate was added to 9 grams of the sodium-lithium carbonate flux. Potassium was determined after fusing by the proposed procedure. Potassium was satisfactorily recovered, as shown by Table I.

In order to check on the effectiveness of this method of decomposing silicates, the filtrate from the silica and the residue from the silica after the hydrofluoric acid treatment were analyzed separately. These results are presented in Table II. In the case of the soil samples three-fourths or more of the potassium was made acid-soluble by the fusion, while in the case of the clays, supplied by the U. S. Bureau of Standards, the potassium was made very nearly completely soluble.

Table III gives the results of comparisons of the proposed method with the J. Lawrence Smith method. The data by the J. Lawrence Smith method have all been obtained by other analysts working at the various stations indicated. Each value reported on the samples from the U. S. Bureau of Chemistry and Soils and the U. S. Bureau of Standards was obtained by a different analyst. In every case the average value obtained by the low-melting flux method is higher than the corresponding average obtained by the J. Lawrence Smith method. The samples from the bureaus show that this difference between the two methods is of the same order of magnitude as the differences within the J. Lawrence Smith values.

Literature Cited

(1) Lamar, O. M., Hazel, W. M., and O'Leary, W. J., Ind. Eng. Chem., Anal. Ed., 7, 429–31 (1935).
(2) Smith, J. L., *Am. J. Sci.* (2), 50, 269 (1871).
(3) Volk, N. J., and Truog, E., *J. Am. Soc. Agron.*, 26, 537–46 (1934).

Received January 22, 1937.

Pretreatment of Wood with Hot Dilute Acid

Effect on Lignin Values

WILBY E. COHEN AND ELWIN E. HARRIS, U. S. Forest Products Laboratory, Madison, Wis.

The influence of pretreatments of wood to remove, by means of hydrolysis, carbohydrate substance which allegedly causes errors in the lignin determination, has been studied to determine whether or not lignin is dissolved during such treatments. Hot water, to some extent, and boiling 3 per cent sulfuric acid, to a much greater extent, dissolved lignin from maple wood. An examination of methoxyl contents demonstrated that the substance removed was lignin and not some carbohydrate material which might polymerize to an insoluble residue. All the filtrates gave significant color reactions for lignin with chlorine and sodium sulfite. In addition, the acid filtrates deposited a brown flocculent substance which contained 20.3 per cent of methoxyl and which behaved like lignin when chlorinated and subsequently dissolved in sodium sulfite. Spruce wood is reported to be affected in a similar manner. It is recommended that all forms of mild hydrolysis, including treatments with hot water, be avoided when preparing woods for either the determination or isolation of lignin.

FOR the purpose of removing carbohydrate substances which allegedly polymerize when subjected to the conditions employed in the estimation of lignin, various forms of pretreatments, using hot dilute acid, have been suggested. Norman and Jenkins (*4*), for example, recommended that the wood be boiled with dilute sulfuric acid for a definite period, making this recommendation with the reservation that nothing was known of the effect of such treatment on lignin as it occurs in the wood. Campbell and Bamford (*1*) stated that such treatment resulted in the polymerization of some carbohydrate substances with a consequent small but definite increase in the lignin yield. Therefore they recommended that dissolved carbohydrate substances be removed immediately from the sphere of action by the application of several acid treatments, each of only a few minutes' duration. In neither of the above instances was the possibility of an accompanying lignin extraction considered. An investigation of this was therefore initiated and the results are presented in this paper.

Experimental Procedure

Maple wood, ground to 40 mesh in a Wiley mill, was extracted in succession with cold alcohol-benzene (1 to 2), cold alcohol, cold water, and water at 98° C. The alcohol-benzene and alcohol extractions were made in a continuous, percolating extractor (each for 24 hours' duration), and the water treatments were applied in a glass-lined mayonnaise mixer, the former for 24 hours and the latter in two periods of 3 hours each. The wood was finally washed on a suction filter until the hot wash water remained colorless. Corresponding quantitative treatments, using glass apparatus, indicated that the total loss by extraction amounted to 4.3 per cent. The wood was then extracted continuously for 50 hours with water at 98° C. in an apparatus which emptied through a siphon tube once every hour. A similar quantitative treatment in glass showed a further loss of 6.3 per cent, making a total loss by extraction and, possibly, by mild hydrolysis of 10.6 per cent.

Preparatory to subsequent treatments the wood was dried at room temperature (20° to 25° C.), and then ground in an attrition mill until all of it passed through a No. 80 sieve.

Separate portions of the prepared wood were then boiled under reflux with a 3 per cent solution of sulfuric acid (50 ml. per gram of wood) for periods of 2, 4, 8, 16, and 30 hours. Another portion was mixed in a filter crucible with a boiling 5 per cent solution of sulfuric acid (10 ml. per gram of wood) for 4 minutes and the acid solution was then withdrawn by suction and renewed. This procedure was continued until the wood had received ten such treatments.

Following each of the foregoing treatments, the acid was removed by suction and the wood washed free of acid by means of hot water. All samples were subsequently dried at room temperature.

Corresponding treatments, using weighed samples and under identical conditions, furnished data relative to the losses caused by acid hydrolysis.

Determinations of lignin, using the U. S. Forest Products Laboratory's modified procedure, and of furfural yield, using the Tollens method with phloroglucinol as precipitant, were made on all samples. Additional samples of lignin were prepared and dried at room temperature preparatory to the determination of methoxyl content.

The data, corrected to the basis of unextracted, moisture-free wood, are presented in Table I.

Discussion

While the furfural yield was only slightly decreased by water treatments, acid hydrolysis caused a rapid decrease which continued steadily with time of hydrolysis until finally, after 30 hours' treatment, only about 1 per cent of furfural was obtained. Lignin values showed significant decreases when the wood was heated with hot water, but the losses were not of the same order as that caused subsequently by boiling 3 per cent sulfuric acid. The latter, in 2 hours, decreased the lignin value to 17.7 per cent which seemed to be the limit, because longer periods of boiling, up to 30 hours, caused no significant losses of lignin. The results (Table I, D to H) suggested a solubility relationship, the acid solution (*a*) having become saturated with the slightly soluble lignin in the first 2 hours, (*b*) having reached a condition of equilibrium between dissolution of lignin and its deposition as a less soluble polymerized material, or (*c*) having dissolved all the soluble lignin during that period.

The methoxyl content of the isolated lignin remained uniform throughout and, therefore, demonstrated that lignin, rather than carbohydrate substances which might polymerize to an insoluble residue, was being removed. This was verified when the lignin methoxyl contents were calculated as percentages of wood.

It was evident that lignin is soluble in hot dilute acid and an examination of the various filtrates supported this contention. These filtrates were chlorinated and, on the addition of sodium sulfite in excess of that required to react with the acid present, a wine-red color, characteristic of chlorin-

Table I. Effect of Boiling Dilute Sulfuric Acid on the Lignin Value of Maple Wood

Reference	Pretreatment	Loss by Solvent Extraction [a]	Loss by Hot-Water Treatment [a]	Loss by Acid Hydrolysis [a]	Furfural Yield [a]	Lignin Content [a]	Methoxyl in Lignin [b]	Methoxyl in Lignin [a]
		%	%	%	%	%	%	%
A	Extraction with alcohol-benzene, alcohol, and cold water	3.2	..	..	12.8	23.2	20.2	4.69
B	Extraction with alcohol-benzene, alcohol, cold water, and hot water	4.3	..	..	12.5	21.5	20.5	4.40
C	Same as B, plus 50 hours' treatment with hot water as described	4.3	6.3	..	12.1	20.2	20.6	4.16
D	Same as C, plus hydrolysis for 2 hours with boiling 3% H_2SO_4 aq.	4.3	6.3	24.8	3.6	17.7	20.4	3.61
E	Same as C, plus hydrolysis for 4 hours with boiling 3% H_2SO_4 aq.	4.3	6.3	29.0	2.3	17.3	20.7	3.58
F	Same as C, plus hydrolysis for 8 hours with boiling 3% H_2SO_4 aq.	4.3	6.3	31.3	1.6	17.6	20.3	3.58
G	Same as C, plus hydrolysis for 16 hours with boiling 3% H_2SO_4 aq.	4.3	6.3	32.2	1.3	17.5	20.5	3.59
H	Same as C, plus hydrolysis for 30 hours with boiling 3% H_2SO_4 aq.	4.3	6.3	35.4	0.9	17.3	20.6	3.56
I	Same as C, plus 10 treatments with boiling 5% H_2SO_4 aq. (10 ml. per gram) each for 4 minutes	4.3	6.3	13.7	10.8	19.7	20.7	4.08

[a] Expressed as percentages of unextracted, moisture-free wood.
[b] Expressed as percentage of lignin.

ated lignin dissolved in sodium sulfite, developed. Furthermore, after standing at room temperature for a few days, a brown flocculent substance resembling lignin separated out from the filtrates. Some of this was collected and chlorinated. It brightened in color to orange yellow and dissolved in sodium sulfite to a wine-red solution which changed to a brown color on heating. The methoxyl content of this substance was found to be 20.3 per cent.

Apparently the dissolved lignin polymerized to a less soluble form when left in contact with the dilute sulfuric acid for several days. Campbell and Bamford (*1*) postulated such a reaction involving carbohydrate substances when they recommended the short successive treatments to which reference has already been made (Table I, I). It is conceivable that the phenomena are identical and that the substance which Campbell and Bamford found to be redeposited was really lignin. Although their method, when used in this study, did not decrease the lignin yield as much as did the other acid treatments, the filtrate gave a definite color reaction for lignin. Probably continued treatment by their method would eventually have decreased the lignin yield to about 17.7 per cent.

The results obtained with dilute acid naturally directed attention to the possibility of similar effects resulting from milder forms of hydrolysis, such as extractions with hot water which had been used in preparing the wood. The lignin content had been appreciably decreased by the prolonged extraction (Table I, C) and the effluent from the extractor gave a slight color reaction for lignin with chlorine and sodium sulfite. This reaction, although slight as compared with that obtained with the acid filtrates, was very significant because about 40 liters were used in the course of the extraction and, as the effluent was run to waste rather than concentrated, the lignin concentration was consequently small. Digestion with water at 98° C. for shorter periods such as 3 hours also resulted in some dissolution of lignin (Table I, B) because the filtrate from this treatment gave a very definite color reaction for lignin.

The action of boiling dilute sulfuric acid on wood is comparable with that of methanol–hydrochloric acid when it is used in the extraction of soluble lignin. In both instances, there is an acidic condition which enhances hydrolysis of some carbohydrate substances. These are apparently associated chemically with the soluble lignin and their removal sets it free to dissolve in water on one hand, or in methanol on the other. In fact, the difference between the lignin yields (1) from wood which has been subjected only to alcohol-benzene, alcohol, and cold water (Table I, A), and (2) from wood which, in addition, has been treated with hot water and dilute sulfuric acid (Table I, D), is approximately 6 per cent—that is, of the same order as the yield of soluble lignin by the methanol–hydrochloric acid process (*3*).

The influence of mild hydrolysis in releasing soluble lignin to a solvent was demonstrated by one of the authors (*2*) when describing the effects of alkaline extraction on the lignin yield. Sodium hydroxide (0.5 per cent) was found to have a much greater solvent action on lignin if the wood was first subjected to an extended extraction, amounting to mild hydrolysis, with hot water.

The polymerization of the dissolved lignin to a less soluble aggregate under the influence of cold dilute sulfuric acid may be regarded as a milder form of the action of the 72 per cent sulfuric acid employed in the lignin determination. It is significant that the filtrate from a lignin determination does not give any form of color reaction with chlorine and sodium sulfite.

Although this investigation was limited to maple wood, similar results, indicating that in addition to maple some spruce lignin was dissolved by dilute sulfuric acid, have been recorded in an unpublished report of the U. S. Forest Products Laboratory by R. L. Mitchell.

It is concluded that any form of pretreatment involving hydrolysis will cause significant errors in lignin determinations and may even result in the complete loss of that portion of lignin which is known as soluble lignin. It is believed that all forms of pretreatment using hot dilute acids are not only unnecessary for the purpose of removing carbohydrate material, but that they should be avoided, and that, if water must be used to remove interfering extraneous matter, cold extraction should preferably be employed.

Literature Cited

(1) Campbell, W. G., and Bamford, K. F., *Biochem. J.*, **30**, 419 (1936).
(2) Cohen, W. E., Division of Forest Products, *Technical Paper* **20**, Council Sci. Ind. Research, Australia, *Pamphlet* 62 (1936).
(3) Harris, E. E., *J. Am. Chem. Soc.*, 58, 894 (1936).
(4) Norman, A. G., and Jenkins, S. H., *Nature*, **131**, 729 (1933).

Received February 23, 1937. Presented before the Division of Cellulose Chemistry at the 93rd Meeting of the American Chemical Society, Chapel Hill, N. C., April 12 to 15, 1937.

Determination of the Common and Rare Alkalies

Note on Wells and Stevens' Method

JOHN C. HILLYER, Carleton College, Northfield, Minn.

RECENTLY Wells and Stevens (*1*) published a detailed modification of the analytical procedure for the alkali group to include accurate determination of lithium, cesium, and rubidium. In analyses on samples of pollucite containing over 30 per cent of cesium oxide it became obvious that the method of Wells and Stevens was not directly applicable in such a case. The purpose of this note is to draw attention to certain facts which they did not sufficiently emphasize, and to suggest a modification of their procedure for cases in which a large percentage of cesium or rubidium is present.

The basis of their separation of these elements from potassium is the extraction of the alkali chlorides with a mixture of alcohol and hydrogen chloride in which the solubility of potassium chloride is reduced as far as possible. Their Table I is here reproduced with the addition of values for the ratio of solubility of cesium chloride to potassium chloride.

TABLE I. SOLUBILITY OF ALKALI CHLORIDES AT 25° C.

Solvent	Solubility KCl	Solubility RbCl	Solubility CsCl	Ratio of CsCl to KCl
	Grams	*Grams*	*Grams*	
1. 10 ml. of water	3.08	7.28	12.7	4.1
2. 10 ml. of concentrated HCl (1 part) and alcohol (2 parts)	0.0031	0.021	0.31	100.0
3. 0.4 ml. of water and 10 ml. of alcohol, both saturated with HCl	0.0006	0.0027	0.024	40.0

It is obvious that solvent 2 is the most efficient for separating the two chlorides. However, since it would not be convenient to reduce the volume much below 10 ml., the fact that solvent 3 dissolves the smallest mass of potassium chloride per 10-ml. portion is adequate reason for its adoption in their method. Its solvent action for cesium chloride is adequate for any sample ordinarily encountered.

In the case encountered by the author, however, a 1-gram sample yielded over 300 mg. of chlorides of the alkali group, substantially all cesium chloride. Using an aliquot containing 100 mg. of alkali chlorides, at least four and probably six extractions would be necessary with solvent 3. These would remove more potassium chloride than the one extraction required with 2, and for the total amount of chlorides the amount extracted by 3 would far exceed that by 2, and the volume of solvent would become inconveniently great. In general, any sample containing enough cesium or rubidium to require four or more extractions with solvent 3 is better extracted by solvent 2.

In case a sample has a high percentage of cesium or rubidium, two courses are open. One is to take a small aliquot and proceed according to the method of Wells and Stevens; when a fair percentage of potassium is also present this is the best and simplest procedure. However, when the percentage of potassium is known to be low, the use of an aliquot satisfactory for cesium chloride reduces the mass of potassium chloride present in the aliquot to such a small value that no degree of accuracy could be claimed for the determination. In such cases, the other course is to use solvent 2, followed by the same procedure.

Where the potassium content is previously known to be very low, a third and simpler procedure is suggested by the work of Wells and Stevens: The extraction of cesium chloride from the mixed chlorides may be omitted and these potassium group chlorides treated as "cesium chloride," containing a trace of potassium extracted with it. The ammonium sulfate separation may then be carried out as directed by them. Experiments with synthetic mixtures of cesium and potassium chlorides containing up to 5 per cent of potassium chloride gave satisfactory results with this separation. The chloroplatinate separation given by these authors should also be applicable at this point, if the amount of potassium chloride can be assumed to be less than 2 mg.

Bearing these facts in mind, a judicious choice of reagents and the use of aliquots should make Wells and Stevens' excellent method applicable to any combination of alkalies encountered in practice, with good precision for each.

Literature Cited

(1) Wells, R. C., and Stevens, R. E., IND. ENG. CHEM., Anal. Ed., 6, 439 (1934).

RECEIVED January 28, 1937.

The Analysis of Pollucite

ROGER C. WELLS AND ROLLIN E. STEVENS
U. S. Geological Survey, Washington, D. C.

HILLYER (*1*) has discussed the method of determining rare alkalies devised by the present writers (*2*), showing that it must be revised when analyzing materials of high rare-alkali content. His notes are an interesting and needed addition to the method, which was devised for the majority of samples encountered in mineral analyses, in which rare alkalies are absent or present only up to moderate quantities. Obviously the procedure should be different for large percentages of the rare alkalies.

In the analysis of pollucite from Tin Mountain, S. Dak., the method was also changed by the authors because of the high content of cesium. The results for the complete analysis are given in Table I.

TABLE I. ANALYSIS OF POLLUCITE FROM TIN MOUNTAIN, S. DAK.

SiO_2	45.66	K_2O	0.13
Al_2O_3	16.64	Rb_2O	None
Fe_2O_3	0.22	Cs_2O	31.80
FeO	0.10	H_2O+	2.17
MgO	0.29	H_2O-	0.42
CaO	0.36	TiO_2	None
Li_2O	0.22		
Na_2O	2.12		100.13

The separated chloroplatinates of potassium, rubidium, and cesium obtained from 0.5000 gram of the mineral were subjected to several fractional crystallizations. The chloroplatinates of potassium and rubidium were thus obtained in solution because of their greater solubility and scarcity, while the bulk of the cesium remained as undissolved chloroplatinate. From the extracted chloroplatinates platinum was removed with formic acid and the resulting chlorides were treated with the alcoholic ammonium sulfate reagent to separate potassium and rubidium from the remaining cesium. The precipitated sulfate was ignited and its weight found to be 0.0011 gram. Careful spectroscopic examination showed the absence of rubidium both in the potassium fraction precipitated by alcoholic ammonium sulfate and in the soluble cesium fraction. From the weight of potassium sulfate obtained, K_2O was calculated to be 0.12 per cent.

The percentage of Cs_2O was found from the weight of mixed chloroplatinates, after correcting for K_2PtCl_6, to be 31.80.

An alternate method based only on fractionation of the chloroplatinates gave a result in close agreement. The chloroplatinates were fractionally precipitated in water, and the soluble part was evaporated and extracted with 15 per cent alcohol to separate the K_2PtCl_6. This method gave 0.14 per cent K_2O and the average of the two results is 0.13 per cent K_2O.

Pollucite is unusual, as it is the only mineral compound of cesium found in nature. Cesium may replace potassium in minerals, but its content seldom exceeds a few per cent and usually it is absent. No mineral has been found in which rubidium is an essential constituent. Rubidium may proxy potassium in some minerals and in these it seldom exceeds 2 per cent. Few minerals contain rare alkalies, and their absence is quickly and definitely shown by the method as originally described.

Literature Cited

(1) Hillyer, J. C., Ind. Eng. Chem., Anal. Ed., 9, 236 (1937).
(2) Wells, R. C., and Stevens, R. E., *Ibid.*, 6, 439 (1934).

Received March 2, 1937. Published by permission of the Director, U. S. Geological Survey.

Borax as an Acidimetric Standard. II

FRANK H. HURLEY, Jr., The Rice Institute, Houston, Texas

A RAPID method for purifying and drying borax by means of alcohol and ether for use as a standard substance has been described (*2*), and preliminary experiments bearing on its stability have been reported. The present paper describes further experiments on the stability and also some tests of the accuracy, precision, speed, and convenience of borax in comparison with sodium carbonate as an acidimetric standard for routine technical and student use.

Stability of Borax

The principal problem which arises in the use of borax, $Na_2B_4O_7 \cdot 10H_2O$, as a standard relates to the fact that it is hydrated, and thus is susceptible to changes in composition due to variation in its water content. It has long been known that borax loses some of its water of hydration on standing in air at ordinary temperatures. This loss proceeds very slowly at first and increases gradually, requiring about 30 days to amount to a total loss of 0.1 per cent (*2*).

In order to prevent this slow decomposition, Menzel (*3*) proposed that borax be kept in a desiccator over a solution saturated with respect to sucrose and sodium chloride. The vapor pressure of this solution is such that borax will remain in the decahydrated state over a wide range of temperature. Menzel found that a sample of borax kept over this solution lost only 0.02 per cent in weight in 12 months. An experiment in verification of Menzel's findings was performed by placing a 3.5-gram sample of borax, dried with alcohol and ether, in a desiccator over the sugar-salt solution and weighing it from time to time over a long period. After 55 days in the desiccator the sample showed a loss of 0.026 per cent in weight, but no further change occurred during a subsequent period of 15 months. It thus appears that borax may be kept indefinitely over saturated sugar-salt solution without undergoing decomposition.

Because borax decomposes so very slowly in air, it seemed likely that it could be stored simply in tightly stoppered bottles for a very long time before sufficient decomposition occurred to have an appreciable effect in ordinary acid standardizations, where an accuracy beyond 0.1 per cent is seldom sought. To test this possibility about 13 grams of recrystallized borax, dried by the alcohol-ether method, were placed in two weighing bottles having tight-fitting ground-glass stoppers. Samples of this material weighing about 0.5 gram were titrated with 0.1 *N* hydrochloric acid at intervals during a 12-month period. All but one of these titrations were run in duplicate, and in all, 23 titrations representing 12 intervals of time were made. The mean value for the ratio of the weight of borax to the volume of acid for all 23 runs was 1.928×10^{-2} gram per milliliter, and the average deviation of a single run was $\pm 0.0010 \times 10^{-2}$ (0.05 per cent). The largest deviation was 0.2 per cent, obtained only once, the remainder being 0.1 per cent or less. The measurements were made with weights and volumetric instruments calibrated to give an accuracy of 0.1 per cent.

If the borax sample had lost some of its water, the calculated ratio would, of course, decrease with time. No trend of this sort could be discovered, nor could any relating to the temperature, which varied from 25° to 33° C.

From these results it appears that borax crystallized and dried in the manner referred to is extraordinarily stable, and that for ordinary analytical purposes where an accuracy greater then 0.1 per cent is not required, it is sufficient to keep the material in a tightly stoppered container.

An experiment testing the stability of 0.1 *N* borax solutions was also performed. Such a solution was prepared from pure borax and stored in a soft glass bottle. Portions were titrated with 0.1 *N* hydrochloric acid every 2 weeks for 4 months and once a month for 3 months longer. During the first 4 months the apparent concentration of borax increased very slowly to a value 0.1 per cent greater than its original value, and in the last 3 months increased more rapidly to a value 0.7 per cent greater. A number of other observations on the stability of 0.1 *N* borax solutions which were not so systematically analyzed are in general agreement with this experiment.

Comparison of Borax and Sodium Carbonate

A number of criteria for the selection of analytical standards for routine technical use are given by Dodge (*1*). Although no substance appears to fulfill all these requirements, it is somewhat surprising that of all the acidimetric standards proposed, anhydrous sodium carbonate, which fails to meet several, should be the most popular, while borax, which seems to fulfill all but one, is little used. The principal objection to sodium carbonate is that it is very difficult to weigh accurately because it is hygroscopic. In addition, it has a rather low equivalent weight (53.00), and the end point of the titration with acid is somewhat indistinct when methyl orange, the usual indicator, is employed.

Borax, on the other hand, has a number of advantages which make its use desirable: It has a high equivalent weight, 190.72; it is inexpensive and easily available; it is easily and economically purified by recrystallization; heating to constant weight is not required; no loss or gain of water occurs during weighing; the end point of the titration with acid is sharp and easily detected with methyl red; the titration error may be eliminated by the use of a simple color standard.

As Dodge has pointed out, the only objection to borax is that it is hydrated, but in view of the ease of the recrystallization and drying with alcohol and ether, and also the unusual stability of the purified material, this objection is largely

overcome, and borax would seem to be superior to sodium carbonate in almost every way.

A direct test of the merits of these two standards was carried out by a class of students in quantitative analysis who were to perform as their first analytical experiment the preparation and standardization of 0.1 N hydrochloric acid, followed by analyses of carbonate solutions as unknowns.

The students prepared pure sodium carbonate by the method of Reinitzer (*4*), and pure borax as previously described (*2*). The carbonate was dried in the usual way by heating to constant weight at 270° to 300° C. The borax was dried in two ways, one group of students using alcohol and ether and another the saturated sugar-salt solution of Menzel. While this latter method of drying is hardly to be recommended for ordinary use because of the time factor, it was introduced into the experiment to provide an independent check on the borax.

The standardization of the acid against borax was performed by the titration of 0.5-gram samples. Methyl red indicator was used, and the end point was matched with a boric acid–sodium chloride color standard (*2*). To standardize the acid against the sodium carbonate, a standard 0.1 N solution was prepared and samples were titrated with the acid, using methyl orange. The weights and volumetric instruments used in preparing the solutions and in the titrations were calibrated by the students to give an accuracy of 0.1 per cent.

Since each student had prepared his own hydrochloric acid by dilution of reagent acid, no direct comparison of the two standardizations was possible. Such a comparison was, however, obtainable by means of a carbonate solution which was analyzed by the students with their acid. This analysis was performed exactly like the carbonate standardization. Each student had two values for the normality of his acid, one from borax and one from sodium carbonate; hence two values for the unknown could be calculated. A comparison of the two values thus obtained affords a means of comparing the merits of the two standards.

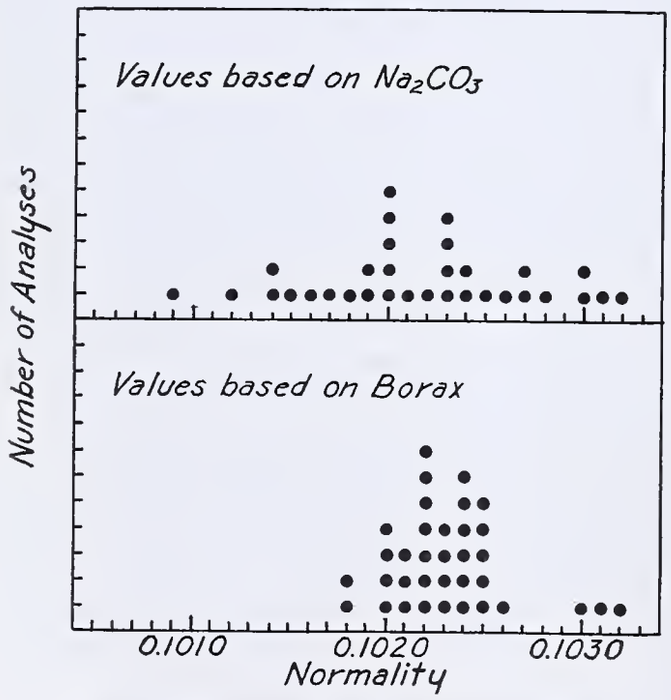

FIGURE 1. NORMALITY OF CARBONATE SOLUTION

The results obtained are shown graphically in Figures 1 and 2. One carbonate value (0.0997 N) does not appear. A summary of the results is given in Table I.

TABLE I. NORMALITY OF CARBONATE SOLUTION

	No. of Analyses	Mean Normality	Average Deviation
Borax[a,b]	35	0.1023	0.00022
Na_2CO_3	32	0.1022	0.00045
Borax[a]	16	0.1024	0.00024
Borax[b]	19	0.1023	0.00021

[a] Dried with alcohol and ether.
[b] Dried over sugar-salt solution.

The good concordance of the mean values for the normality of the carbonate shows again the suitability of borax as an acidimetric standard and gives added confirmation to the validity of the alcohol-ether method of drying. The average deviation gives a measure of the variability in the preparation and use of the two standards. Since the average deviation for the sodium carbonate values is twice that for borax, even with the most aberrant result excluded, it may be concluded that borax, when properly purified and dried, gives more reproducible results than sodium carbonate in the hands of students. Such a conclusion is also supported by other student results not reported.

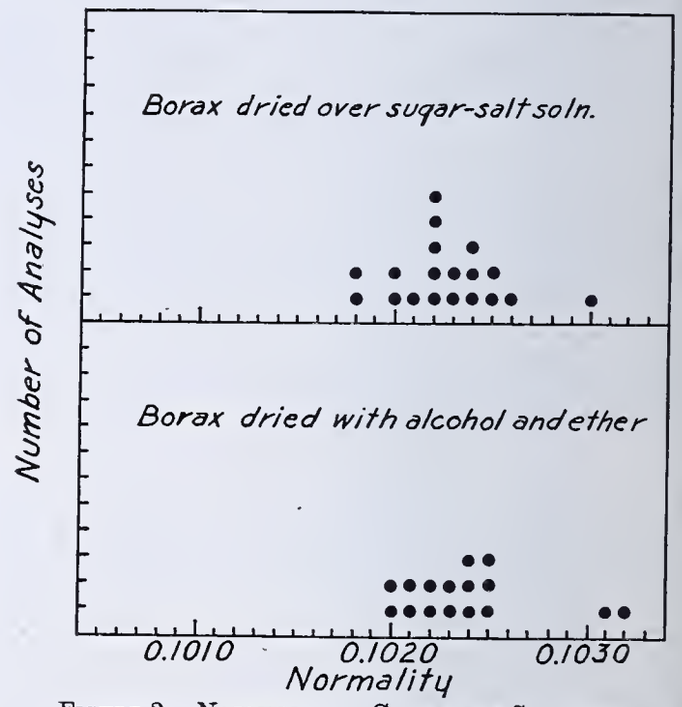

FIGURE 2. NORMALITY OF CARBONATE SOLUTION

With regard to the speed of the two methods of standardization, it would seem at first thought that borax, because it requires recrystallization, is less rapid than sodium carbonate. Actually this is not the case. In the experiment described, the recrystallization and treatment with alcohol and ether required at most 1.5 hours' work, while the heating of the carbonate to constant weight, the most time-consuming operation in the entire experiment, required at least twice this length of time.

Acknowledgment

The writer wishes to thank Arthur F. Scott for his interest and coöperation in this work.

Summary

In accordance with the findings of Menzel, borax may be kept indefinitely over a saturated sugar-salt solution without any change in composition.

Dry, recrystallized borax may be stored in tightly stoppered bottles for as long as a year without undergoing any change in composition greater than 0.1 per cent.

Borax is superior to sodium carbonate as an acidimetric standard for general use, since it is equally accurate, more precise, faster, and more convenient.

Literature Cited

(1) Dodge, J. IND. ENG. CHEM., 7, 29 (1915).
(2) Hurley, *Ibid.*, Anal. Ed., 8, 220 (1936).
(3) Menzel, *Z. anorg. allgem. Chem.*, 224, 10–13 (1935).
(4) Reinitzer, *Z. angew. Chem.*, 7, 551 (1894).

RECEIVED March 16, 1937.

The Calibration of Weights

FRANK H. HURLEY, JR.
The Rice Institute, Houston, Texas

THE calibration of a set of weights is usually performed by the well-known method of Richards (*3*). The essential feature of this method is the device used for obtaining the corrections for the individual weights without the use of simultaneous equations such as are required in older calibration methods (*5*). In his original description of the procedure Richards stated that this method of obtaining the corrections was based on an approximation regarding the properties of small numbers in the presence of large ones, and in many of the subsequent expositions of the method which appear in textbooks and in the literature the procedure is explained on this basis (*4*). However, in recent years Eaton (*1*) has shown that in reality no approximation is involved, and therefore the weight corrections obtained by Richards' method are identical with those calculated by substitution in systems of algebraic equations relating the various weights.

In the present paper, a complete and rigorous analysis of Richards' method is made in a way which serves to clarify a number of points regarding the theory of the process, especially the approximation on which the method was for so long a time thought to rest. In addition, a careful study of the observational errors in weight calibration is presented, and the way in which they affect the weight corrections is analyzed.

The Sensitivity

In building up the "preliminary values" of the weights by progressive intercomparison, the small differences in mass between the various weights and combinations are usually measured by the rest-point displacement and translated into terms of the rider by means of the sensitivity. For this reason a determination of the sensitivity of the balance at various loads must precede the calibration or be made while the calibration is in progress.

We may define the sensitivity, s, as the displacement in rest-point caused by the effective mass of the rider at its 1.0-mg. position on the beam. The exact value of this mass in grams is not known (though it is in the neighborhood of 1.0 mg.), and to avoid making any assumption regarding its value, we may call it B. If we assume that for small deflections the rest-point displacement is proportional to the added load, we may calculate the masses corresponding to small displacements by means of the sensitivity. Thus the mass x, corresponding to a rest-point displacement d, is

$$x = \frac{d}{s} B$$

The extent to which this assumption is valid depends on the construction of the balance.

Observed Masses of the Weights

The calibration proper consists in the experimental determination of the masses of the various weights in terms of the mass of the smallest weight and the effective mass of the rider at the 1.0-mg. position, B. In Richards' terminology these masses were called "preliminary values," but this term is here discarded in favor of "observed masses."

Let us assume that the smallest weight in a set being calibrated is 0.01 gram, the rider also being 0.01 gram. Choosing the first 0.01-gram weight as the standard of comparison, let its mass be A. On comparison of the rider at its 10-mg. position, R, with the standard, let the observed weight difference correspond to a rest-point displacement of d_R. Then the observed mass of the rider at its 10-mg. position is $A + \frac{d_R}{s}B$. Similarly, the observed mass of the 0.01′ when compared with the standard is $A + \frac{d_{0.01'}}{s}B$. The mass of the 0.02-gram weight, compared with the standard and the 0.01′, is $2\,A + \left(\frac{d_{0.01'}}{s} + \frac{d_{0.02}}{s}\right)B$. The observed masses of the other weights are similarly obtained.

In Table I the calibration data for a set of weights are tabulated. These data are taken from Eaton's paper, the only change being that the weight designated as 0.01″ by him is here called the rider at its 10-mg. position, R.

It is clear from Table I that the observed masses of the weights are given in terms of two standard masses, A and B, between which no relationship has been determined experimentally. In order to evaluate the masses of the weights in grams, the values of both A and B in grams must be found. It is obvious that these can be calculated only if the masses of two of the weights in the set are known in grams. This is also true of any other system of mass units. This calculation could be made by setting the expressions for the observed masses of the two known weights equal to their values in grams. This would give two equations

TABLE I. CALIBRATION DATA

Weight	Weights Used for Comparison	Weight Difference $d/s\,B$	Observed Mass	Face Value	Weight Correction
0.01	.....	....	A	$A - 0.07\,B$	$+0.07\,B$
0.01′	0.01	$-0.06\,B$	$A - 0.06\,B$	$A - 0.07\,B$	$+0.01\,B$
R	0.01	$-0.09\,B$	$A - 0.09\,B$	$A - 0.07\,B$	$-0.02\,B$
0.02	0.01 + 0.01′	$-0.04\,B$	$2\,A - 0.10\,B$	$2\,A - 0.14\,B$	$+0.04\,B$
0.05	Σ (0.05)[a]	$-0.13\,B$	$5\,A - 0.38\,B$	$5\,A - 0.35\,B$	$-0.03\,B$
0.1	Σ (0.1)	$-0.13\,B$	$10\,A - 0.76\,B$	$10\,A - 0.70\,B$	$-0.06\,B$
0.1′	0.1	$+0.06\,B$	$10\,A - 0.70\,B$	$10\,A - 0.70\,B$	$0.00\,B$
0.2	0.1 + 0.1′	$+0.02\,B$	$20\,A - 1.44\,B$	$20\,A - 1.40\,B$	$-0.04\,B$
0.5	Σ (0.5)	$+0.05\,B$	$50\,A - 3.48\,B$	$50\,A - 3.51\,B - 0.00001$ g.	$+0.03\,B + 0.00001$ g.
1.0	Σ (1.0)	$-0.08\,B$	$100\,A - 7.09\,B$	$100\,A - 7.02\,B - 0.00002$ g.	$-0.07\,B + 0.00002$ g.
1.0′	1.0	$+0.13\,B$	$100\,A - 6.96\,B$	$100\,A - 7.02\,B - 0.00002$ g.	$+0.06\,B + 0.00002$ g.
1.0″	1.0	$+0.03\,B$	$100\,A - 7.06\,B$	$100\,A - 7.02\,B - 0.00002$ g.	$-0.04\,B + 0.00002$ g.
2.0	1.0 + 1.0′	$+0.02\,B$	$200\,A - 14.03\,B$	$200\,A - 14.04\,B - 0.00003$ g.	$+0.01\,B + 0.00003$ g.
5.0	Σ (5.0)	$+0.04\,B$	$500\,A - 35.10\,B$	$500\,A - 35.09\,B - 0.00008$ g.	$-0.01\,B + 0.00008$ g.
10	Σ (10)	$-0.14\,B$	$1{,}000\,A - 70.38\,B$	$1{,}000\,A - 70.19\,B - 0.00016$ g.	$-0.19\,B + 0.00016$ g.
10′	10	$+0.30\,B$	$1{,}000\,A - 70.08\,B$	$1{,}000\,A - 70.19\,B - 0.00016$ g.	$+0.11\,B + 0.00016$ g.
20	10 + 10′	$+0.43\,B$	$2{,}000\,A - 140.03\,B$	$2{,}000\,A - 140.38\,B - 0.00032$ g.	$+0.35\,B + 0.00032$ g.
50	Σ (50)	$+0.24\,B$	$5{,}000\,A - 350.49\,B$	$5{,}000\,A - 350.95\,B - 0.00079$ g.	$+0.46\,B + 0.00079$ g.
100	Σ (100)	$-0.67\,B$	$10{,}000\,A - 701.89\,B$	$10{,}000\,A - 701.89\,B - 0.00158$ g.	$+ 0.00158$ g.

[a] The meaning of this notation is Σ (0.05) = 0.01 + 0.01′ + R + 0.02.

TABLE II. CALIBRATION DATA, 1 TO 100 GRAMS

Weight	Weights Used for Comparison	Weight Difference, $d/s\ B$	Observed Mass	Face Value	Weight Correction
1.0	.....	....	$100\ A - 7.09\ B = C$	$C + 0.07\ B - 0.00002$ g.	$-0.07\ B + 0.00002$ g.
1.0′	1.0	$+0.13\ B$	$C + 0.13\ B$	$C + 0.07\ B - 0.00002$ g.	$+0.06\ B + 0.00002$ g.
1.0″	1.0	$+0.03\ B$	$C + 0.03\ B$	$C + 0.07\ B - 0.00002$ g.	$-0.04\ B + 0.00002$ g.
2.0	1.0 + 1.0′	$+0.02\ B$	$2\ C + 0.15\ B$	$2\ C + 0.14\ B - 0.00003$ g.	$+0.01\ B + 0.00003$ g.
5.0	Σ (5.0)	$+0.04\ B$	$5\ C + 0.35\ B$	$5\ C + 0.36\ B - 0.00008$ g.	$-0.01\ B + 0.00008$ g.
10	Σ (10)	$-0.14\ B$	$10\ C + 0.52\ B$	$10\ C + 0.71\ B - 0.00016$ g.	$-0.19\ B + 0.00016$ g.
10	.....	....	$10\ C + 0.52\ B = D$	$D + 0.19\ B - 0.00016$ g.	$-0.19\ B + 0.00016$ g.
10′	10	$+0.30\ B$	$D + 0.30\ B$	$D + 0.19\ B - 0.00016$ g.	$+0.11\ B + 0.00016$ g.
Σ (10)	10	$+0.14\ B$	$D + 0.14\ B$	....	....
20	10 + 10′	$+0.43\ B$	$2\ D + 0.73\ B$	$2\ D + 0.38\ B - 0.00032$ g.	$+0.35\ B + 0.00032$ g.
50	Σ (50)	$+0.24\ B$	$5\ D + 1.41\ B$	$5\ D + 0.96\ B - 0.00079$ g.	$+0.45\ B + 0.00079$ g.
100	Σ (100)	$-0.67\ B$	$10\ D + 1.91\ B$	$10\ D + 1.91\ B - 0.00158$ g.	$+ 0.00158$ g.

which could be solved simultaneously for A and B. Substitution of these values for A and B in the expressions for the observed masses would give the values in grams for all the weights in the set. The calculation of A and B in this way is, however, so inaccurate that this method of obtaining gram values for the weights is rendered useless. A further objection will appear in the consideration of observational errors.

Richards' method of calculation differs considerably from that described above in that the weight corrections, rather than the observed masses, are evaluated in grams. In order to begin this calculation we must know the mass of one of the weights in grams. For the sake of accuracy the known weight should be the largest in the set. In the example chosen, the mass of the 100-gram weight is known to be 100.00158 gram. Therefore, from the observed mass of this weight we may write

$$10{,}000\ A - 701.89\ B = 100.00158 \text{ grams}$$

from which we have

$$10{,}000\ A - 701.89\ B - 0.00158 \text{ gram} = 100.00000 \text{ grams}$$

Since 100.00000 grams is the nominal or face value of this weight, the left-hand member of this equation gives an expression in A and B which is equal to this nominal or face value. Dividing this equation by 2, by 5, etc.—i. e., taking the proper aliquot parts of the expression—will then give expressions in A and B which are equal to the face values of the other weights in the set (column 5 of Table I). In Richards' terminology they are called the "ideal values."

Now the correction for any weight is equal to the amount that must be added to its face value to give its actual or observed mass; in other words, its correction equals its observed mass minus its face value. Therefore the corrections for the weights are given by subtracting the quantities in column 5 from those in column 4. The resulting corrections are given in column 6.

In the expressions for the corrections, the terms in A have vanished, leaving only terms in B and in grams, the latter becoming too small to be added in the small weights. If relative rather than absolute weight corrections are used, the terms in grams do not appear at all. The A terms may, of course, be completely omitted from the table in the interests of brevity, once a thorough understanding of the process has been gained.

In order to evaluate the corrections in grams it is necessary to know the value of B in grams, but an inspection of the multipliers of B in the corrections reveals that it need be known only to three significant figures. The evaluation of B requires either that the mass of one of the weights other than the 100-gram be known in grams, or that it be assumed that the beam is marked correctly to within about 1 per cent. (If the rider is actually used on the beam to determine the weight differences, it is necessary to make this assumption at the outset in order to calculate the observed masses of the weights.)

If the first condition is fulfilled, it is easy to see how B may be calculated from the expression for the correction. In the interest of accuracy, the known weight should be the one whose weight correction has the largest term in B. If, on the other hand, the second condition is assumed to hold, the value of B is calculated from the weight of the rider at its end position on the beam. This may be obtained from the correction for R given in the last column of Table I. From this correction

$$R = 0.010000000 \text{ gram} - 0.02\ B$$

We assume $10\ B = R$, and substitute in the above expression

$$10\ B = 0.010000000 \text{ gram} - 0.02\ B$$

from which

$$10.02\ B = 0.010000000 \text{ gram}$$

and

$$B = 0.000998 \text{ gram}$$

Or, rounding off to three significant figures,

$$B = 0.00100 \text{ gram}$$

Substitution of this value for B in the corrections gives the values of the corrections in grams. While the value obtained for B in the example was 1.00 mg., this depends directly on the correction for R. Thus a correction of $+0.10\ B$ (about 0.1 mg.) for the rider would increase the value of B by 1 per cent.

If the weight corrections are desired only to the nearest 0.1 mg., the evaluation of B need hardly be carried out, since a rider with a correction large enough to affect the calculations (0.5 mg. or more) is unlikely to be used at all.

The assumption made regarding the beam divisions really amounts to assuming a value in grams for one of the weights other than the 100-gram—namely, the weight B, its value being assumed as 0.100 R gram. This is the second approximation which has been made in the calibration, the first being that the deflections of the pointer are proportional to the added load. It is apparent, however, that the second approximation need not be made at all if the masses of two of the weights in the set are known in grams. (The assumptions of proportionality of deflections to added load and $R = 10\ B$ can be checked directly, after the calibration has given a set of values for the weights.)

A device for keeping small the numerical coefficients of B in the observed masses, and thus making the calculations less subject to errors in arithmetic, is to divide the table into three parts: (1) the fractional weights, including the first 1.0-gram weight, (2) the weights from 1 to 10 grams, (3) the weights from 10 to 100 grams. The first division is identical with the first part of Table I, and the way in which the other two divisions are made is illustrated in Table II. This arrangement of the computations is highly recommended as a timesaver.

Assignment of Values to A and B

In the preceding analysis, no preliminary scale of mass units was used, and no numerical values were assigned to the two standard masses, A and B, at the outset. In this way a clear picture of the process was obtained.

In Eaton's treatment of the calibration procedure, he assigned to A, the mass of the smallest weight, the value zero, and, by implication, gave B the value 0.00100000 gram. In this way he obtained "preliminary values" (observed masses) which involved only the observed weight differences. While the assignment of the value zero to A in no way affects the weight corrections obtained, it must be objected to on the grounds of logic, since the mass of any weight can hardly be called zero in any system of units. That it is possible to give A the value zero (or any other value) without affecting the weight corrections is only due to the fact that A disappears by subtraction in the calculation of the corrections, a point not clearly shown by Eaton. The assignment of the value 0.00100000 gram to B, which is implied when Eaton writes the preliminary value of the 100-gram weight as 0.70189 gram, must also be objected to because it is untrue. However, in spite of the manifest error made in assigning B this value, the weight corrections calculated from these preliminary values would not be significantly in error unless the true mass of B differed by about 1 per cent from that assigned. An inspection of the coefficients of B in the correction terms of Table I reveals why this is so.

In the ordinary Richards procedure, A is assigned a value of exactly 0.01 unit of mass, and B, by implication, is assigned the value of exactly 0.001 "unit." Thus the preliminary value of the 100-gram weight would be written

$$100.00000 - 0.70189 = 99.29811$$

The units of this preliminary value are supposed to be 100 × the mass of the 0.01-gram weight. This, however, is an erroneous idea, for the figure 99.29811 is not a homogeneous number, being actually composed of two parts—namely, 10,000 A and -701.89 B—which cannot be added unless the relationship between A and B is known. To add them in the way indicated is to imply that $B = 0.100000\ A$ unit, an assumption not justified by the facts. Again, however, the assignment of these values to A and B has little effect on the weight corrections which are calculated from the nonhomogeneous preliminary values. A, of course, is completely without effect, since it subtracts out, and the assignment of the value 0.00100000 "unit" to B has no significant effect in the example chosen unless the real value of B lies outside the region 0.00100 ± 0.00001 gram.

The real objection to the assignment of values to A and B in the calculation of the observed masses is that it may lead to incorrect ideas regarding the theory of the calibration process. This is especially true of the ordinary procedure, which, because its preliminary values appear to be homogeneous when they are not, has led to the mistaken idea that an approximation is involved in the calculation of the corrections. The source of this mistake may be seen if the observed masses of Table I are translated into "preliminary values" in the supposed "units" by the ordinary Richards procedure. Having obtained preliminary values in this way, the units are next translated into grams by means of a known weight. For the 100-gram weight,

$$99.29811 \text{ "units"} = 100.00158 \text{ grams}$$

$$\text{Or, } 1 \text{ "unit"} = \frac{100.00158}{99.29811} \text{ grams}$$

By multiplying the preliminary value of each weight by this factor, it appears that its value is converted into grams. This is, to be sure, an entirely factitious conversion because of the nonhomogeneity of the factor. It was pointed out by Richards that the conversion of each preliminary value from units to grams by the use of this conversion factor would involve a large amount of calculation and necessitate the use of seven-place logarithms. To avoid this he suggested an "approximation" which may be illustrated with the 50-gram weight, the preliminary value of which is 49.64951 units. Although Richards did not clearly state his method of reasoning, it must have been along these lines:

$$\text{Mass of 50 in grams} = M_{50} = 49.64951 \times \frac{100.00158}{99.29811} \text{ grams}$$

Dividing the numerator and denominator of the "factor" by 2,

$$M_{50} = 49.64951 \times \frac{50.00079}{49.64906}$$

This calculation is performed by the use of an approximation theorem which is that, when a and b are small relative to N,

$$N\left(\frac{N+a}{N+b}\right) \cong N + a - b$$

In the numerical expression

$$\begin{aligned} N &= 49.64951, \text{ the "preliminary value"} \\ a &= 50.00079 - N \\ b &= 49.64906 - N \end{aligned}$$

If instead of the mass of the 50-gram weight we calculate its correction, we obtain

$$\begin{aligned} \text{Corr.}_{50} &= N + a - b - 50.00000 \\ &= N + (50.00079 - N) - (49.64906 - N) - 50.00000 \\ &= N - (49.64906 - 0.00079) \end{aligned}$$

which may be rewritten as

$$\text{Corr.}_{50} = N - \frac{1}{2}(99.29811 - 0.00158)$$

or, in words,

Correction = "preliminary value" − "ideal value"

The argument is identical for all other weights in the set.

Observational Errors

The full beauty of Richards' calibration method is not apparent until we examine the way in which observational errors are handled. Richards himself made no comment on this point in his original paper, but subsequent writers (*2*) have described the method of calculating the corrections as one for "redistributing" the accumulated error in the "preliminary value" of the heaviest weight "according to

Table III. Observational Errors

Weight	Error in Weight Difference	Error in Observed Mass	Maximum Error in Observed Mass
0.01	..	..	$1 \times e$
0.01′	a	a	1
R	b	b	2
0.02	c	$a + c$	5
0.05	d	$2a + b + c + d$	10
0.1	e	$4a + 2b + 2c + d + e$	11
0.1′	f	$4a + 2b + 2c + d + e + f$	22
0.2	g	$8a + 4b + 4c + 2d + 2e + f + g$	53
0.5	h	$20a + 10b + 10c + 5d + 4e + 2f + g + h$	106
1.0	i	$40a + 20b + 20c + 10d + 8e + 4f + 2g + h + i = X$	107
1.0′	j	$j + X$	107
1.0″	k	$k + X$	214
2.0	l	$j + l + 2X$	535
5.0	m	$2j + k + l + m + 5X$	1,070
10	n	$4j + 2k + 2l + m + n + 10X$	1,071
10′	o	$4j + 2k + 2l + m + n + o + 10X$	2,142
20	p	$8j + 4k + 4l + 2m + 2n + o + p + 20X$	5,353
50	q	$20j + 10k + 10l + 5m + 4n + 2o + p + q + 50X$	10,706
100	r	$40j + 20k + 20l + 10m + 8n + 4o + 2p + q + r + 100X$	

the relative values of the weights." It is not always clear what is meant by this. A rigorous examination of the observational errors which occur in the calibration is extremely interesting and fruitful, especially if the errors are considered individually.

Observational errors in weight calibration occur from two sources, the determination of the rest-point differences and the sensitivity. Since the one is divided by the other in obtaining the weight differences, we may consider the net effect of the errors on these differences. Thus for the 0.01′, the weight difference on comparison with the 0.01 may be written $\left(\frac{d_{0.01'}}{s} + a\right) B$, where a is a term of unknown value correcting the observational error in $\frac{d_{0.01'}}{s}$. The other weight differences contain similar correction terms. These terms are listed in column 2 of Table III, the factor B being omitted. The way in which these errors accumulate in the course of calculating the observed masses is shown in column 3. The expressions here are the terms which, when multiplied by B, must be added to the observed masses to correct for their observational errors and thus obtain the true masses of the weights. The true mass of the 100-gram weight is thus: $10{,}000A - 701.89B + (100X + 40j + 20k + 20l + 10m + 8n + 4o + 2p + q + r)B$.

Table IV. Observational Errors

Weight	Error in Weight Difference	Error in Weight Correction	Maximum Error in Weight Correction
0.01	..	$-\frac{1}{100} X - \frac{1}{10000} Y$	$1.0706 \times \epsilon$
0.01′	a	$\frac{1}{100} (60a - 20b - 20c - 10d - 8e - 4f - 2g - h - i) - \frac{1}{10000} Y$	1.2706
R	b	$\frac{1}{100} (-40a + 80b - 20c - 10d - 8e - 4f - 2g - h - i) - \frac{1}{10000} Y$	1.6706
0.02	c	$\frac{1}{50} (10a - 20b + 30c - 10d - 8e - 4f - \quad - h - i) - \frac{1}{5000} Y$	1.7412
0.05	d	$\frac{1}{20} (10d - 8e - 4f - 2g - h - i) - \frac{1}{2000}$	1.353
0.1	e	$\frac{1}{10} (2e - 4f - 2g - h - i) - \frac{1}{1000} Y$	1.106
0.1′		$\frac{1}{10} (2e + 6f - 2g - h - i) - \frac{1}{1000} Y$	1.306
0.2	g	$\frac{1}{5} (2e + f + 3g - h - i) - \frac{1}{500} Y$	1.812
0.5	h	$\frac{1}{2} (h - i) - \frac{1}{200} Y$	1.53
1.0	i	$-\frac{1}{100} (40j + 20k + 20l + 10m + 8n + 4o + 2p + q + r) = -\frac{1}{100} Y$	1.06
1.0′	j	$\frac{1}{100} (60j - 20k - 20l - 10m - 8n - 4o - 2p - q - r)$	1.26
1.0″	k	$\frac{1}{100} (-40j + 80k - 20l - 10m - 8n - 4o - 2p - q - r)$	1.66
2.0	l	$\frac{1}{50} (10j - 20k + 30l - 10m - 8n - 4o - 2p - q - r)$	1.72
5.0	m	$\frac{1}{20} (10m - 8n - 4o - 2p - q - r)$	1.3
10	n	$\frac{1}{10} (2n - 4o - 2p - q - r)$	1
10′	o	$\frac{1}{10} (2n + 6o - 2p - q - r)$	1.2
20	p	$\frac{1}{5} (2n + o + 3p - q - r)$	1.6
50	q	$\frac{1}{2} (q - r)$	1
100	r	.....	..

In calculating the face values, the term −0.00158 gram is added to the above expression and aliquot parts of the whole are taken. The next step is the subtraction of the face values from the observed masses (or true masses, if the error correction terms are added) to obtain the weight corrections. The result of this subtraction on the observational errors is shown in column 3 of Table IV. (The aliquot parts of the error term are not shown.) These are the net observational error corrections for each weight, and when multiplied by B are to be added to the weight corrections of Table I.

An inspection of the error expressions of Table IV reveals several interesting facts. In the first place, the most important individual errors affecting any weight correction are seen to be those made in the comparison of weights near the one being considered. For example, the correction term for the 0.1-gram weight involves all the observational errors from 0.1 to 100 grams, but only those of the 0.1, 0.1′, 0.2, 0.5, and 1.0 (e, f, g, h, and i) are of much importance, the others being corrections of the second or third order. If the observational error made in the comparison of the 100-gram weight, r, were as large as 5 mg. (assuming $rB = 5$ mg.) this would affect the 0.1-gram correction only by 0.005 mg.

Another interesting fact is that if we assume the observational errors to be of the same absolute magnitude in every comparison, the maximum error in the correction of any weight (assuming the most unfavorable distribution of signs) is between one and two times a single error. This is shown in column 4 of Table IV, where the maximum errors for each of the weight corrections have been tabulated. These were calculated by assuming that each of the observational errors amounts to ϵ, and the most unfavorable distribution of signs was taken for every weight.

A consideration of the errors to which the observed masses are subject is also instructive. These are tabulated in column 4 of Table III. Here it is assumed that each error amounts to $+\epsilon$. These errors accumulate extremely rapidly in the calculation of the observed masses, as can be seen from the table, and by the time the 100-gram weight is reached, the error in the observed mass amounts to 10,706 ϵ. This, of course, explains how it happens that two persons calibrating the same set of weights may obtain sets of preliminary values which differ widely and yet come out with weight corrections which are sensibly the same. It also shows how inaccurate the calculation of A and B from the observed masses of two known weights may be. Thus the calculation and substitution of values of A and B in the expressions for the observed masses to obtain gram values for the weights might give values which would be grossly in error. In Richards' method for obtaining the gram values, however, the observational errors disappear to a large extent by subtraction. It is this feature which gives the method its real importance.

Summary

1. A complete and rigorous explanation of Richards' method for the calibration of weights has been presented, and the approximations involved have been pointed out.

2. The calculation of "preliminary values" in the usual manner has been shown to be an illogical procedure which has led to confusion regarding the theory of the method, though it is ordinarily without serious effect on the results obtained.

3. An analysis of the observational errors in the calibra-

tion process has been made and the effect of the individual errors on the separate weight corrections has been determined.

Acknowledgment

The author wishes to thank Arthur F. Scott for his helpful criticism and coöperation in this work.

Literature Cited

(1) Eaton, *J. Am. Chem. Soc.*, **54**, 3261 (1932).
(2) Hopkins, Zinn, and Rogers, *Ibid.*, **42**, 2528 (1920).
(3) Richards, *Ibid.*, **22**, 144 (1900).
(4) Semon, *J. Chem. Education*, **2**, 132 (1925).
(5) Stähler, "Handbuch der Arbeitsmethoden in der anorganischen Chemie," Vol. III, p. 23, Leipzig, Veit & Co., 1913.

RECEIVED November 4, 1936.

An Apparatus for Determining Odor in Water

A Practical System of Dilutions for Establishing Threshold Zone

W. B. HART
The Atlantic Refining Company, Philadelphia, Pa.

THE odor of water is a highly revealing, though broad, criterion of its quality. The presence of substances having intense and characteristic odor is often detectable through the sense of smell. The odor test is frequently applied as a part of the examination of raw water for domestic supply or to determine the effectiveness of purification processes and is also extensively used in the examination of industrial wastes. Under these circumstances, the odor of an individual substance is involved only in unusual instances. Instead, the odors encountered are those caused by minute organisms, vegetable decay, earthy suspended matter, domestic sewage, industrial wastes of various kinds, or combinations of these.

Various procedures for determining the odor of a sample of water have been proposed from time to time, most of them developments of water-purification plant laboratories. The original method (*1*) is familiar to all. Later, Gullans (*4*), in using Spaulding's threshold system for odor testing, developed the "snozzle" tube which he held down in the neck of the flask. The top of the tube was flared and formed a more or less close fit for the operator's nose. This was a noteworthy improvement. Recently, Fair developed the osmometer, followed by the types A and B osmoscopes.

The Atlantic Refining Company, at its Philadelphia Refinery, has established a laboratory for control of processes used to condition waste water for proper disposal and for general research in pollution prevention by petroleum refining processes. These studies must of necessity take into consideration prevention of pollution not only by petroleum and its products but also by various chemical compounds. Types of odors in waste water and persistence after further dilution in a stream have received particular attention.

During the past several years, all the methods so far developed for taking the odor of water have been tried or given serious consideration. Some were particularly applicable to control of water purification processes and unsuitable for liquid wastes. Each method had some feature which did not seem to meet the requirements. Usually this feature involved the apparatus recommended.

A constant search has been carried on to find a method that is practical, general in application, easy and rapid in manipulation, and as free as possible from error. It is well known that individuals vary in their sensitivity to odors. This variation cannot be entirely overcome by any apparatus or procedure. A satisfactory apparatus and method should meet certain conditions: It should make possible taking the odor of the sample with the minimum danger of contamination by odors in the atmosphere where the test is being conducted. Taking the odor should not involve any violence in inhalation but, instead, the same quiet intake of breath that is normal to breathing. There should be no tubes extending into the nose, nor close-fitting nosepiece, for any discomfort or unnatural feeling seriously interferes with the sense of smell. The equipment should be simple in design, inexpensive, and if possible it should be portable. It cannot be emphasized too strongly that the apparatus must be so designed that each part subject to contact with the sample odor must be readily removable so that it may be washed thoroughly, easily, and

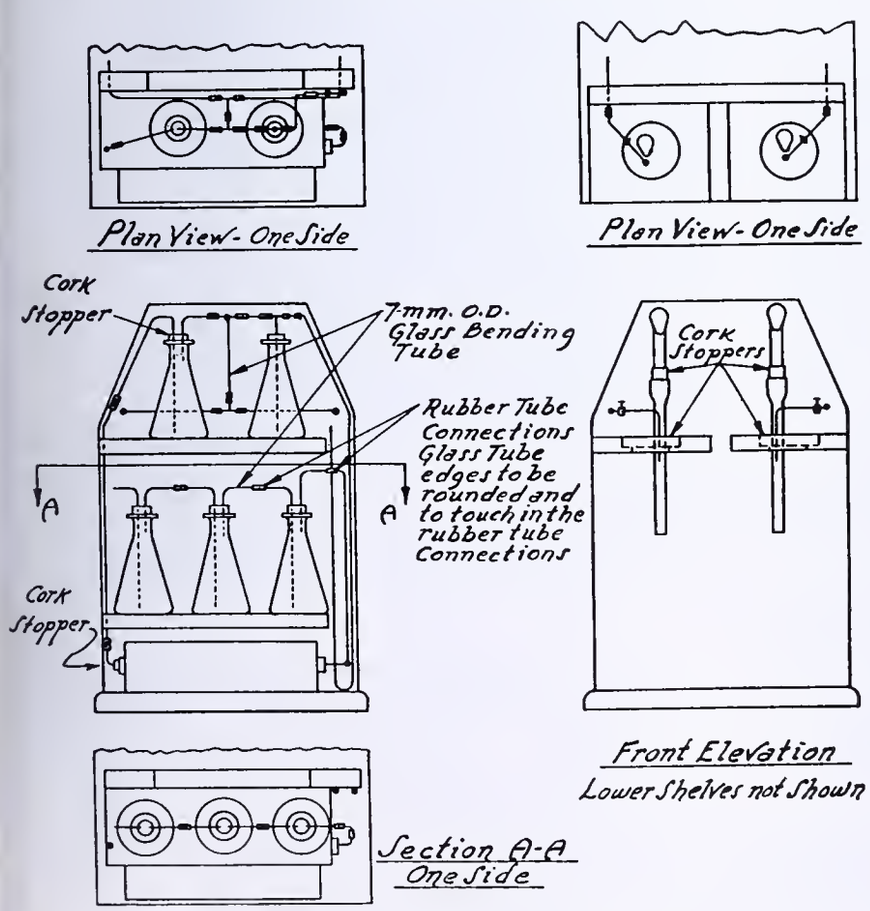

FIGURE 1. ODOR DETERMINATION APPARATUS
All stoppers rubber, except as shown

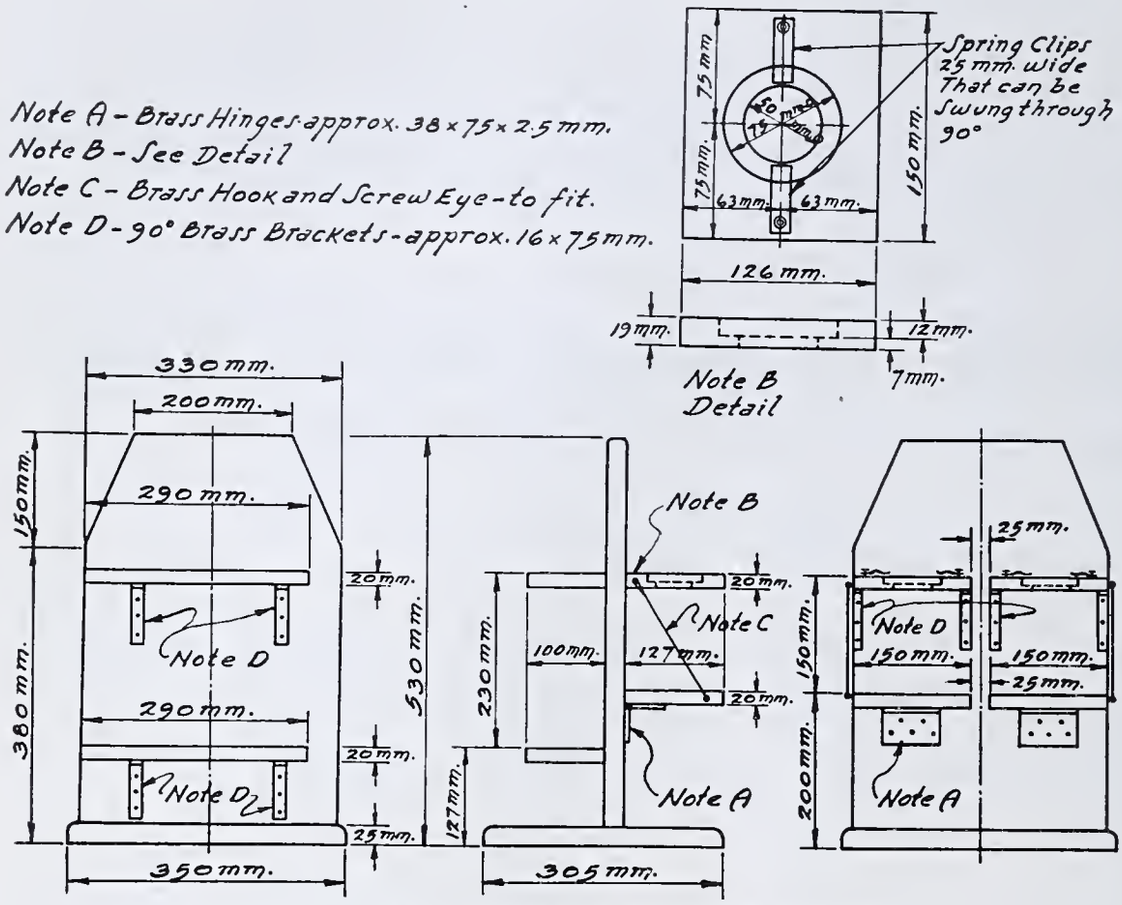

FIGURE 2. STAND FOR ODOR DETERMINATION EQUIPMENT

quickly. The importance of each of these features was well demonstrated while developing the equipment described below.

Apparatus

The apparatus consists essentially of a purification train; a means of supporting two flasks, one for the sample and one for a blank of odor-free water; a support for the odor-free air inlet and smelling tube for each flask; a combined mercury seal and pressure-relief valve to maintain the required pressure in the system and allow the escape of air when not being passed into the flasks; and a manometer to show the pressure in the system. The source of the air used is a compressor system or, in one portable design, a truck-tire inner tube and an auto pump. The apparatus is briefly described, since details are better shown by Figures 1 to 6.

PURIFICATION TRAIN. For deodorizing the incoming air, which should not exceed 70.3 grams per sq. cm. (one pound per square inch) in pressure, a train of three flasks and an activated carbon cannister is used. The first flask contains about 75 ml. of standard formula dichromate–sulfuric acid oxidizing solution. The second flask contains about the same amount of strong caustic soda solution, and the third about 2 grams of 300-mesh activated carbon suspended in water. The cannister is of the standard gas-mask type. The air is passed through the train in the usual manner and then through an empty flask which serves as a trap. Just beyond it divides into three streams, one leading to the sample flasks, one to the mercury-seal relief valve, and one to the manometer.

SAMPLE FLASK SUSPENSION. Two separate shelves carrying corks approximately 75 mm. in diameter extend horizontally from the main vertical support of the apparatus. To hold the corks the shelves are recessed and supplied with clip springs. Concentrically within the recess the shelves are drilled with a hole through which the flanges of the sample flasks will pass and press against the under side of the corks. Two hinged shelves are located lower on the main vertical support at a point where they will swing out horizontally and hold the flasks against the corks with a slight pressure which is taken up by the spring clips. These shelves are then supported by hooks which swing from the sides of the main support. Rubber pads on the swinging shelves take up any irregularity in the height of the flasks which are of 250-ml. capacity and the wide-mouth type.

PRESSURE-RELIEF VALVE AND MANOMETER. The pressure relief valve is simply an open-end tube extending into some mercury in a container, far enough to keep about 100 mm. (4 inches) of water pressure in the system when the stopcocks to the flasks are closed.

The manometer is of the simple U-tube type.

SMELLING TUBE AND AIR INLET. The smelling tubes for the sample flask and for the blank flask are identical. There are two parts. An adapter tube is used for the lower section and extends to just above the level of the sample in the flask. A cork carrying a nosepiece fits into the flared top of the adapter.

The nosepiece is individual for each observer, and being separate, one equipment can be used by several individuals. It is made to an approximate fit, so that only a slight space is left between the flare and the nose when being used. It is not a tight fit, but is close enough so that the stream of air coming up the smelling tube passes into and around the nose, driving away any atmospheric odors that might give misleading results.

A convenient way of making the nosepiece is to make a wax mold of the observer's nose and then a plaster of Paris cast. The nosepiece is then blown on the cast.

The odorless air inlet is simply a glass tube carrying a stopcock. The tube extends through the cork and about 2.5 cm. (1 inch) into the flask, so that the incoming air, moving downward, displaces the layer of air next to the sample, driving it upward through the smelling tube to the observer's nose.

All parts of the apparatus are standard chemical items. The glass tubing is made up end tight against end. The frame or support for the apparatus may be of metal or wood that is well shellacked to seal any odor. The odor due to the use of corks, rubber connections, shellac, etc., was the subject of much discussion during the development stage. No undesirable effects were noticeable. A possible explanation for this is that it seems less difficult to detect some odor than no odor. Odor may be present, but in bringing the sample through dilution into equilibrium with the blank through the sense of smell, some slight odor may help.

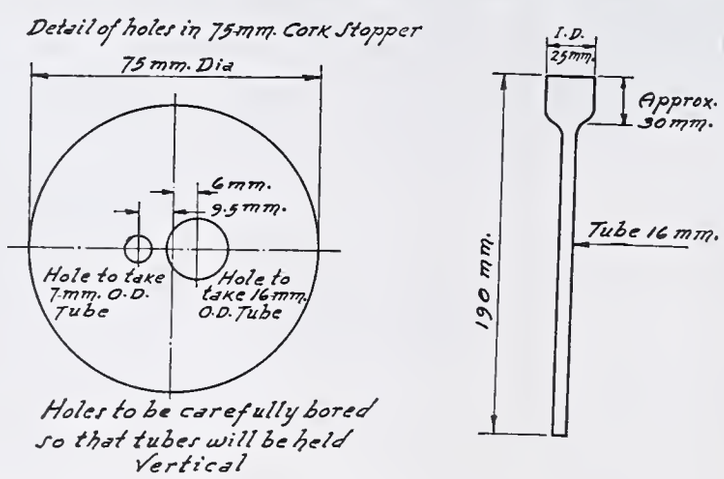

FIGURE 3. DETAIL OF ADAPTER

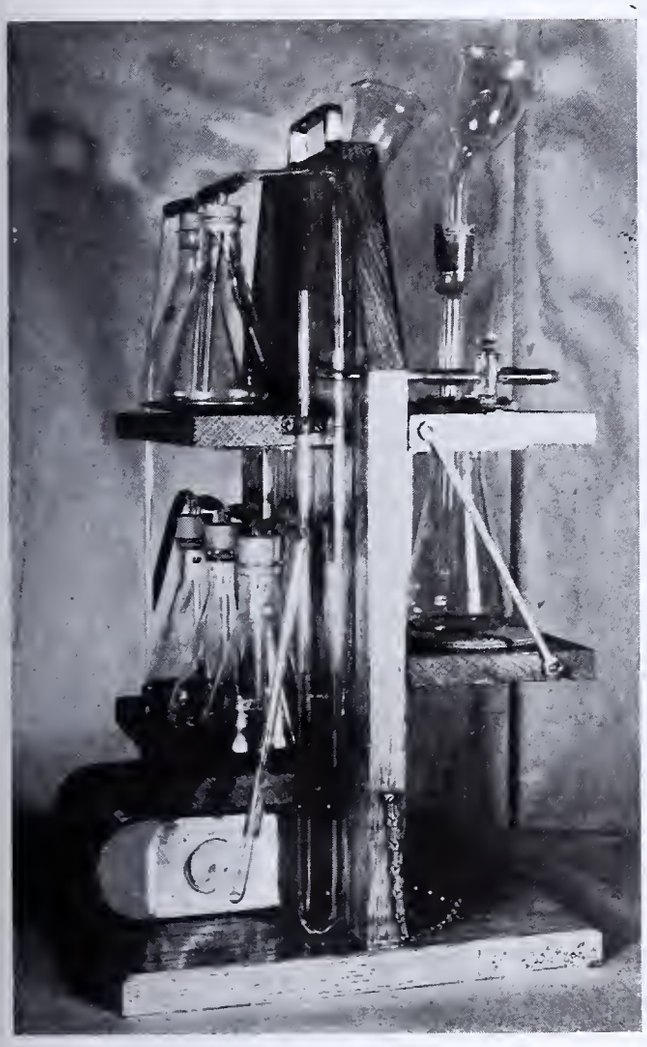

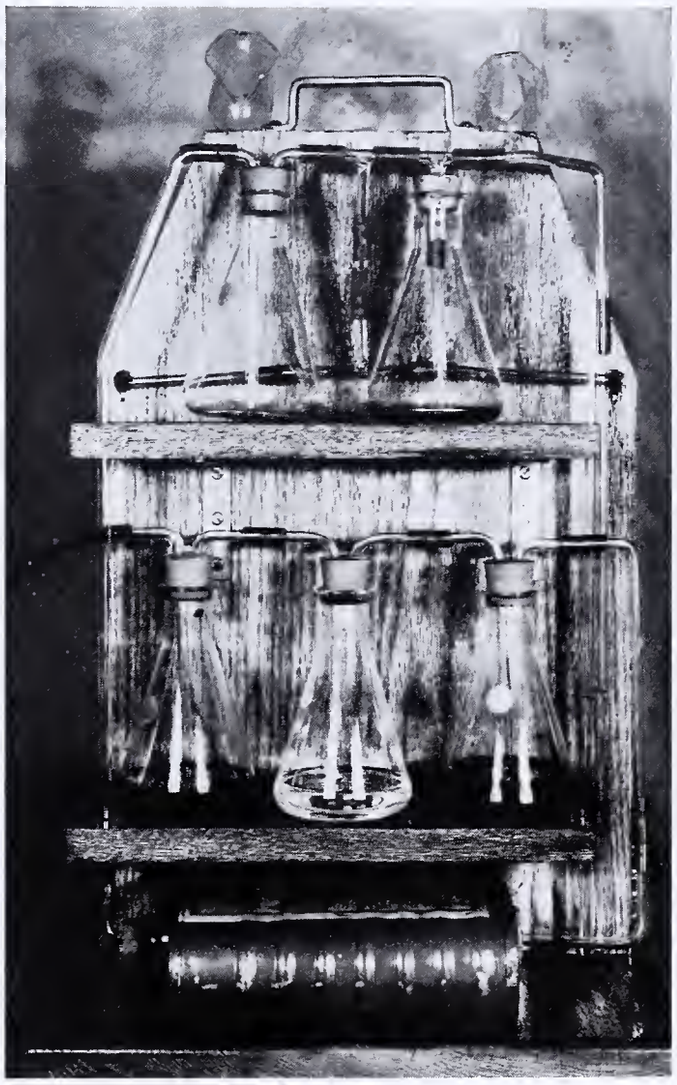

FIGURES 4 AND 5. PHOTOGRAPHIC VIEWS OF APPARATUS

Material List

PURIFICATION TRAIN. Glass tubing: laboratory bending tubing of soda-lime glass, 7-mm. outside diameter, 1-mm. wall; approximately 4.5 meters required. Rubber tubing: transparent rubber tubing, thin wall, 6-mm. bore, 1.75-mm. wall; approximately 45 cm. required. Corks: 1 No. 12 and 1 No. 16, selected dense stock; bored centrally one hole for 7-mm. outside diameter tubing; 1 each required. Flasks: 250-ml. conical flasks, narrow-mouth type; 5 required. Cannister: standard gas-mask carbon cannister; 1 required; replaced as needed.

SAMPLE EQUIPMENT. Flasks: 250-ml. capacity, conical flasks, extra wide mouth; 12 or more required. Corks: 75-mm. diameter, 16 mm. high, of selected dense stock; drilled two holes (Figure 3); 2 required. No. 12, selected dense stock, drilled centrally for 16-mm. outside diameter tube; 2 required. Adapters: 190 mm. long from top of flare to end of tube, 16-mm. outside diameter tube, 25-mm. inside diameter flare; 2 required. Nosepiece: made special for operators of 16-mm. outside diameter lime-soda glass tube; 2 or more required. Stopcocks: glass; plugbore 5 mm., bent to fit; 2 required. Glass tees: bore, 5 mm.; 3 required.

Test Procedure

All those engaged in the examination of water are familiar with the determination of "threshold point." In reality this is not a point to more than one observer but rather a "zone" and is so designated here. To even one observer, the exact point would be determined only rarely and there is but one absolute point that can be checked by several: the condition of no odor present. In samples of very low odor concentration the zone becomes more and more constricted as zero odor is approached and may seem to be a point. Group opinion is valuable under all conditions and particularly when numbers of individuals are concerned with the purity of the water.

The ability to detect faint odors varies not only with different individuals but at times with the same individual, depending upon physical condition. Also, when odor is present to a certain slight extent, one observer may detect it and not another. Between the low intensity detectable to the first and the higher intensity detectable to the other, there is a "threshold zone" which is the indication that the water "smells." This "zone" has practical value to many; the "point" has value to only the one who finds it. The average sensitivity will be well within the zone, but it is probable that in a group of observers the individual threshold finding of any one will range from 5 to 10 per cent on either side of the group average.

In carrying out the threshold zone determination using the equipment described, dilutions are made of the sample with odor-free water and a tentative threshold is found by simply smelling at the mouth of the flask. This tentative zone is established at a point of no odor, well beyond the real zone. Dilutions for this purpose are made in multiples of ten. Then, after a rest period, intermediate dilutions are made up and tested in the equipment, always approaching the threshold zone from the no-odor side to assure a clear nose.

The manipulation is simple. An odor-free blank of 100 ml. is set up on one side of the apparatus and the unknown dilutions are tried on the other. The flask is held up under the cork, making sure that the flanges rest evenly, and the bottom shelf is brought up and hooked in place. With the air turned on through the apparatus the stopcock is opened for a few seconds to sweep out any room atmosphere. Then the stopcock is closed, the

flask is removed and shaken gently to contact the air and water and replaced. This agitation is important. Then the nose is placed just comfortably in the nosepiece and, opening the stopcock just before a normal inhalation, the odor is taken. There should be air escaping from the relief valve when the stopcock is closed and also, to some extent, when it is open.

Where an absolutely odor-free atmosphere exists, no protection against outside odors is necessary. This is not often the case, particularly where waste waters are being tested in industrial laboratories. Very satisfactory results have been obtained with the procedure described under conditions purposely made difficult.

Figure 6. Photographic View of Apparatus

Evaluation of Odors

The original method of evaluating odors as devised by the late Professor Whipple is described in Standard Methods (*1*). Spaulding's threshold-point method (*5, 6*) was a great improvement. More recently the exponential method of Fair (*2, 3*) was developed. These methods, or variations of them, are all in use today. But in making threshold determinations, and in studying the results of others, a uniform procedure that will eliminate as many variables as possible is badly needed, particularly when the final result depends upon the differing sensitivity of various individuals. Also, as the intensity or persistency of the odor increases, the dilutions constituting the boundaries of the threshold zone may diverge to a greater extent without great importance attaching.

Table I. Dilutions

Dilution Identification	Sample	Odor-Free Water	Dilution
	Ml.	*Ml.*	
1	10	90	1 in 10
2	10 (Dilution 1)	90	1 in 100
3	10 (Dilution 2)	90	1 in 1,000
4	10 (Dilution 3)	90	1 in 10,000
5	10 (Dilution 4)	90	1 in 100,000

Since such zones actually exist, it is important that they be limited. Such limitation makes for uniformity that will add value to the reports of various observers. It will in reality make possible check determinations at the expense of very little accuracy, for there will be a definiteness about the observation that is not present when a "point" is looked for. The point found by one observer will be questionable to another. A systematic series of dilutions, that will step by step establish zones such as described and is particularly adaptable to waste waters, follows.

Dilutions for Determination of Threshold Zone

The dilutions are made up as shown in Table I, extending the series until it is found that the threshold zone has been passed. This establishes the tentative threshold.

Having found two dilutions, the lower having odor and the higher no odor, it is obvious that the real threshold zone lies between. The limits are then reduced as shown in Table II.

Certain precautions should be observed in making dilutions. Since waste waters may carry suspended matter or oily suspensions that cannot readily be washed from a pipet, clean measuring equipment should be used wherever conditions indicate.

All dilutions are made to as nearly 100 ml. as is possible for accurate ratios, so that the air-water volume ratio remains practically constant.

The threshold zone reported is the dilution in which odor is first detected.

Table II. Dilutions

Dilution Identification	Sample	Odor-Free Water	Dilution
	Ml.	*Ml.*	
1A	12 L. D.[a]	96	1 in 90% of H. D.[b]
2A	12 L. D.	84	1 in 80% of H. D.
3A	15 L. D.	90	1 in 70% of H. D.
4A	16 of L. D.	80	1 in 60% of H. D.
5A	20 of L. D.	80	1 in 50% of H. D.
6A	25 of L. D.	75	1 in 40% of H. D.
7A	33 of L. D.	66	1 in 30% of H. D.
8A	50 of L. D.	50	1 in 20% of H. D.

[a] Lower dilution, L. D. [b] Higher dilution, H. D.

This information then will indicate water quality: need or no need for further treatment or any other purpose required.

Acknowledgment

Although not included in the references the author wishes to acknowledge the very valuable assistance and information given by M. W. Cowles, Health Officer, Hackensack Water Co., and L. F. Warrick, State Sanitary Engineer, Wisconsin.

Literature Cited

(1) Am. Public Health Assoc., "Standard Methods of Water Analysis."
(2) Fair, G. M., *J. Am. Water Works Assoc.*, **26**, 1670 (1934).
(3) Fair, G. M., *J. New England Water Works Assoc.*, **47**, 248–72 (1933).
(4) Gullans, Oscar, *J. Am. Water Works Assoc.*, **25**, 974–81 (1933).
(5) Spaulding, C. H., *Am. J. Pub. Health*, **21**, 1038–9 (1931).
(6) Spaulding, C. H., *J. Am. Water Works Assoc.*, **24**, 1111–18 (1932)

Received April 25, 1936. Presented before the Division of Water, Sewage, and Sanitation Chemistry at the 91st Meeting of the American Chemical Society, Kansas City, Mo., April 13 to 17, 1936.

Twenty-Plate Laboratory Bubble-Cap Still

For Low-Boiling Materials

JOHANNES H. BRUUN AND SCOTT D. WEST, Sun Oil Company Research Laboratory, Norwood, Pa.

THE object of the present investigation was to develop a laboratory still suitable for the preparation of low-boiling (below room temperature) compounds of extremely high purity. The main requirements for such a still are:

1. The efficiency of the fractionating column, expressed in the number of theoretical plates, should be such that even small amounts of a volatile impurity can be removed. A study of the vapor-liquid equilibrium diagrams of binary mixtures will reveal that it is normally much more difficult to effect an enrichment in concentration from 95 to 100 mole per cent than from 90 to 95 mole per cent.
2. The capacity of the still should be large enough so that comparatively large amounts (500 to 1000 ml.) of material can be distilled in a single distillation.

The low-temperature columns of Podbielniak (*6*), Davis (*4*), and Bosschart (*1*) have been used successfully for establishing approximate compositions of low-boiling mixtures. For the purpose of preparing pure low-boiling compounds, however, it was felt that an improved still could be designed which would meet the above mentioned requirements better than the older columns.

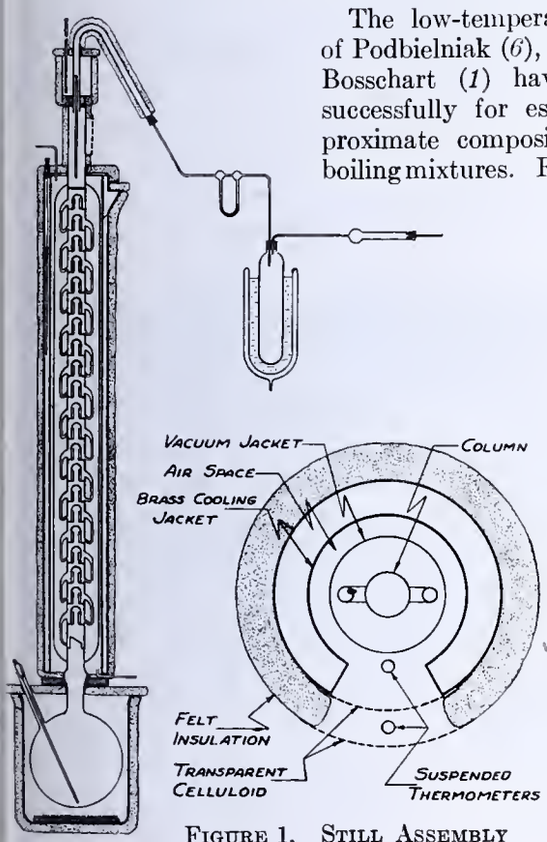

FIGURE 1. STILL ASSEMBLY

Description of Still

Figure 1 shows the assembly of the still. The still pot has a capacity of 1000 ml. and is provided with a thermometer well into which is suspended a toluene thermometer. It is surrounded by a Pyrex beaker, the outside of which is heavily insulated with felt pad. In the bottom of the beaker is placed an electric heater similar to that described in an earlier publication (*3*).

The fractionating column, which is 80 cm. long, consists of twenty bubble-cap plates of glass of the type shown in Figure 2 and described in a recent paper (*2*). As indicated in Figure 1, a vacuum glass jacket (72 mm. o. d.) was sealed to the column in order to minimize radiation. During distillations of low-boiling compounds, such as propane, it was found that better results could be obtained if the glass vacuum jacket was surrounded by a C-shaped brass cooling jacket provided with a vertical celluloid window along its entire height. The bottom, the outside, and the top of the cooling jacket were insulated with heavy felt pad. The column was supported by an angle iron frame by means of a Transite support.

The reflux head consisted of a half-inch copper tube surrounded by a short 2-inch brass cooling jacket. All of the exposed parts of the reflux head were insulated by felt.

The receiver consisted of small pressure cylinders immersed into a Dewar flask.

The flowmeter shown between the reflux head and the receiver was used to indicate the rate of distillation for fractions such as propane and may be omitted if desired.

Operation

The brass cooling jacket around the column was filled about three-fourths full with a cooling mixture such as carbon tetrachloride and chloroform, and solid carbon dioxide was introduced through the spout near the top until the temperature in the brass jacket was low enough to cool the vacuum jacket and the column and to minimize radiation through the glass vacuum jacket. In order to ensure complete visibility of the column and of the thermometer between the column and the inside celluloid window, it is important to prevent water vapor from freezing on the vacuum jacket and on the windows. For this reason Dehydrite tubes were connected to the top and bottom of the air space between the brass jacket and the vacuum jacket, as well as to the space between the two celluloid windows.

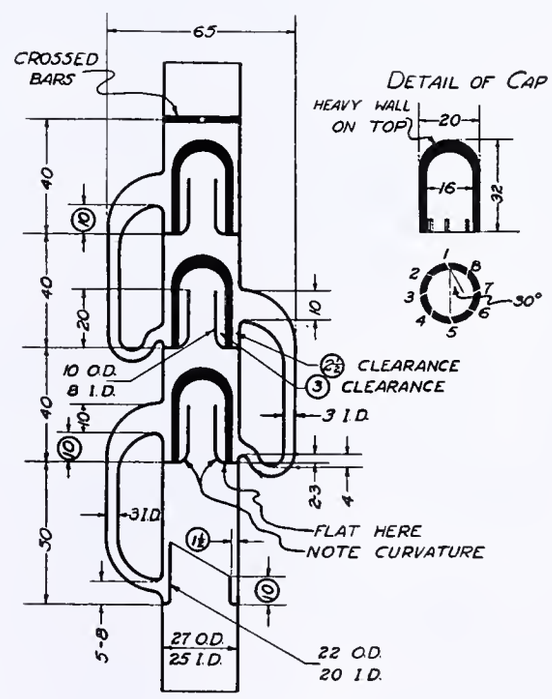

FIGURE 2. REDESIGNED BUBBLE-CAP COLUMN, 4-CM. SECTIONS

Slots in bubble cap, as shown, about 0.5 to 1 mm. wide and 5 mm. deep, at an angle of 30° with radius, fire-polished. Material, Pyrex laboratory glass. All dimensions are in millimeters. Exact dimensions are circled.

For charging purposes the still pot was cooled by surrounding it with a large Dewar flask containing cooling liquid. The material to be distilled was then introduced into the still pot as a liquid. As soon as the reflux head had been cooled sufficiently to ensure complete condensation, the Dewar flask under the still pot was replaced by the heating unit shown in Figure 1. During distillation of very low-boiling fractions such as propane, the operation of the bubble-cap column will not commence until a sufficient quantity of liquid has condensed on the plates. If flooding should occur during this initial starting period, some pressure should be applied on the top of the column by blowing through a drying tube located at the end of the distillation train. This procedure will force the condensed liquid down to the empty plates and will enable the operator to start a distillation in about 10 or 15 minutes.

A thermometer suspended from the reflux head at the top of the column was used to read the temperature of the distillation. Other thermometers were placed in the still pot, in the air space between the vacuum jacket and the brass jacket, and in the cooling mixtures surrounding the column and the reflux head.

The distillate fractions may be taken either by temperature or by volume. When the latter method was used, the volume of distillate in the receiving cylinder was measured by means of a small glass tube (about 2 mm. o. d.) which was inserted into the liquid distillates for 1 or 2 seconds. A calibrated glass receiver could obviously be used for most hydrocarbons but for low-boiling liquids, such as propane, steel cylinders were preferred since they were used also as pressure storage containers for the distilled fractions.

Efficiency

Carefully conducted tests with different liquid mixtures and under different rates of distillation showed that the height of the equivalent theoretical plate for the bubble-cap column shown in Figure 2 is slightly above 4 cm. (*2*). Consequently, the separation obtained by means of the new column is equivalent to an efficiency of nearly twenty theoretical plates.

The column shown in Figure 1 was used for the purification of *n*-propane. The time-temperature cooling curve of the distilled middle fraction of this propane indicated an unusually high degree of purity (*5*).

Literature Cited

(1) Bosschart, R. A. J., Ind. Eng. Chem., Anal. Ed., 6, 29 (1934).
(2) Bruun, J. H., *Ibid.*, 8, 224 (1936).
(3) Bruun, J. H., and Schicktanz, S. T., *Bur. Standards J. Research*, 7, 851–82 (1931).
(4) Davis, H. S., Ind. Eng. Chem., Anal. Ed., 1, 61 (1929).
(5) Hicks-Bruun, M. M., and Bruun, J. H., *J. Am. Chem. Soc.*, 58, 810 (1936).
(6) Podbielniak, W. J., Ind. Eng. Chem., Anal. Ed., 3, 177 (1931).

Received November 28, 1936.

A Variable-Voltage Autotransformer

D. H. COOK, Department of Chemistry, School of Tropical Medicine, San Juan, Puerto Rico

A SOURCE of variable alternating current voltages would often be convenient in laboratory work. Low voltages of 2 to 24 volts can, of course, be supplied by toy or bell-ringing transformers, but their current-carrying capacity is small. Greenleaf (*3*) described the construction of a simple autotransformer to be used with photoflood lamps in photography, and there are commercial instruments, generally rheostats, on the market for the same purpose, but they lack flexibility for general purposes.

A means of varying voltages from 35 to 180 in small steps and with an output up to 10 amperes was required for experimental work, and the following instrument was designed and made up. The total cost was about $25 and it has already paid for itself in its convenience, adaptability, and general usefulness.

The main part of the transformer was made up on conventional lines, the core being formed of L-laminations obtained from the local power company. They were 1.5 inches wide and were trimmed to give, when piled in a rectangle, a 1 × 6 inch window. Sufficient of them were assembled to give a stack 3.5 inches high when compressed, thus furnishing a core cross section of at least 4 square inches, which is necessary for an output of 1 kilowatt. No. 14, enameled, cotton-covered, magnet wire was used and the winding was calculated on the basis of 2 turns per volt. Taps can be supplied for any desired number of voltages. In this instrument taps were taken off every 10 turns starting at the 70th turn, thus giving 5-volt steps for regulation. A layer of empire tape was used to insulate each layer of the winding. Details of winding technic, core size, wire size, carrying capacity, etc., can be found in standard publications (*1, 2, 4*) and many other texts of experimental radio and physics.

The power line connection which normally would, in this case, be connected to the 220th turn (transformer calculated for 2 turns per volt) was made variable by the addition of a 7-point rotary switch, allowing connection to be made to every 20 turns of the transformer winding, from the 180th to 300th turn, inclusive. This increased the range and usefulness of the apparatus. The main regulator was a 20-point rotary switch giving a variation of 3 to 5 volts per contact, depending on the position of the 7-point switch.

Since switch points could not be purchased here, they were easily made by cutting 0.25-inch disks from a 0.375-inch brass rod, drilling a 0.1875-inch hole partway through, and sweat-soldering to the heads of 0.1875-inch brass bolts 1.25 inches long. The tips of these bolts had a 0.0625-inch hole drilled into them for 0.25 inch, and the transformer taps of No. 14 wire were sweat-soldered to them after assembling. This is not a rheostat, and the switch points must be spaced wide enough to prevent the contact shoes of the switch arms from engaging two switch points at the same time, which would cause a short circuit, and very large currents would flow through a limited portion of the transformer windings.

A 10-ampere Weston alternating current ammeter and 150 volt alternating current voltmeter were placed in the output circuit, together with a 10-ampere fuse plug and two porcelain plug outlets. A Cutler Hammer single-pole single-throw heavy duty toggle switch was placed in the output side ahead of the ammeter. The voltmeter was so wired that when this switch was in the off position, the meter still registered the voltage that can be thrown into the output circuit. These wiring details are clearly seen in Figure 1. The instruments and switches were mounted on a 12 × 14 inch Bakelite panel and the whole was screwed to a 2-inch mahogany base 12 × 15 inches. The outfit weighed about 50 pounds and was capable of delivering 8 amperes at any voltage from 35 to 190 continuously and 10 amperes for an hour without heating up above 45° C. Figure 2 shows panel mounting.

It is ideal for closely regulating the output of heating devices such as small furnaces, hot plates, and immersion heaters. The speed of any Universal laboratory motor used for stirrers, centrifuges, or grinders, can be controlled. Ordinary light bulbs flashed at 180 or 190 volts can be used in place of photofloods lamps for photography. Projection machines and arc lamps microprojectors can be maintained at efficient voltages on power lines that are delivering only 90 to 100 volts. A 17-volt tap could be added, if desired, to use the General Electric S_1 and S lamps for ultraviolet work. In fact, the device is useful for any purpose where close regulation of voltage to an apparatus is

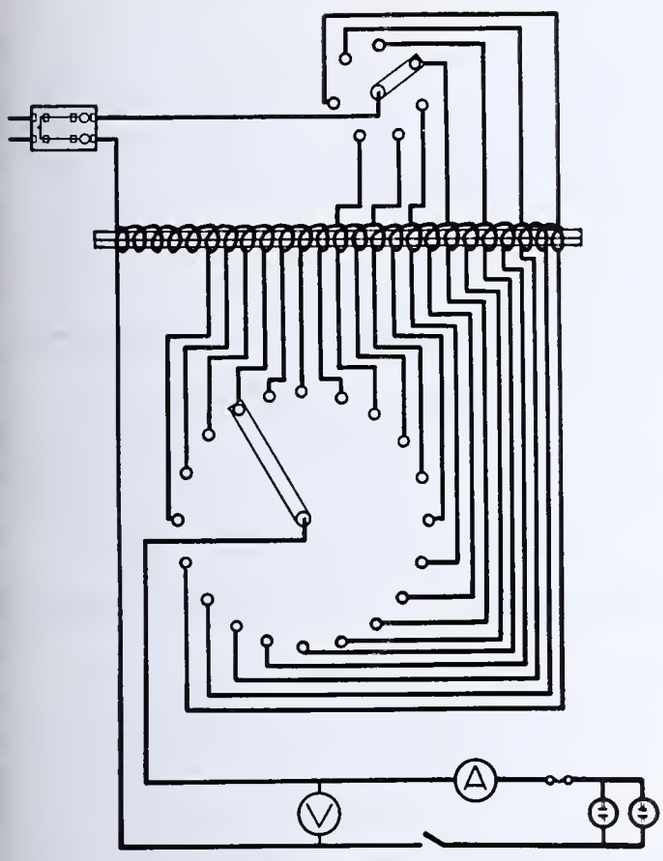

FIGURE 1. WIRING DETAILS

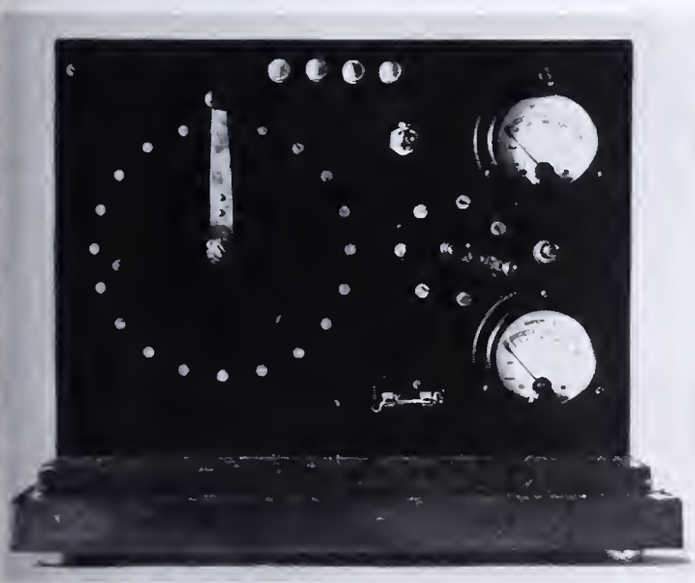

FIGURE 2. PANEL MOUNTING, FRONT VIEW

desirable. It does not regulate in the sense of keeping down voltage fluctuations in the main line supply. Unlike a rheostat, there is no power lost in heat; all the current is used in producing the effect desired and regulation is closer than with the average rheostat. On this instrument, 4 binding posts are mounted on the panel to furnish current for a hot wire loop for glass cutting. They are connected to any successive 10-turn taps of the transformer, thus giving voltages from 3 to 20, depending on the position of the 7-point rotary switch.

This device has been in constant service in the laboratory for two years and has given entire satisfaction.

Literature Cited

(1) American Radio Relay League, Hartford, Conn., "Radio Amateurs' Handbook," 2nd ed., pp. 130–6, 1927.
(2) Chemical Rubber Publishing Co., Cleveland, Ohio, "Handbook of Chemistry and Physics," 21st ed., 1936.
(3) Greenleaf, A. R., *Camera*, Vol. L. No. 3, 155 (1935).
(4) Technical Service Bureau, Inc., Chicago, Ill., *Tech. Bull.* D-111.

RECEIVED March 16, 1937.

Siphon-Starting Device

T. W. CHANDLER, Rayon Department, E. I. du Pont de Nemours & Co., Inc., Buffalo, N. Y.

THE starting of a siphon, particularly with corrosive liquids in an open container, often cannot be achieved conveniently and safely by expedients commonly used. Siphoning from a wide-mouthed bottle, pail, or drum may present such difficulty, and to meet this condition in handling a corrosive solution the device shown in Figure 1 was made.

Essentially, the apparatus consists of a siphon centered in a reservoir tube, of sufficient capacity to fill and start the siphon by pressure on the liquid in the reservoir. A rubber stopper around the bottom of the larger tube acts to seal the reservoir until the siphon has been started; then tilting the assembly allows the siphon to drain the container. A flat disk of gasket rubber placed on the bottom of the containing vessel may help to form a better seal while the siphon is being started.

The drawing is self-explanatory, except that it does not indicate the relation between the tube sizes. The length of the siphon and height of the reservoir are determined by the container with which they are to be used. If it is assumed that the length of the siphon is three times the height of the reservoir, and if the reservoir is to provide four times the volume of the siphon tube, the relationship of the inside tube diameters is: $D = \sqrt{12d^2}$, where D is the diameter of the reservoir and d is the diameter of the siphon. These relationships provide for sufficient reservoir capacity to ensure an excess of liquid over that just sufficient to start the siphon.

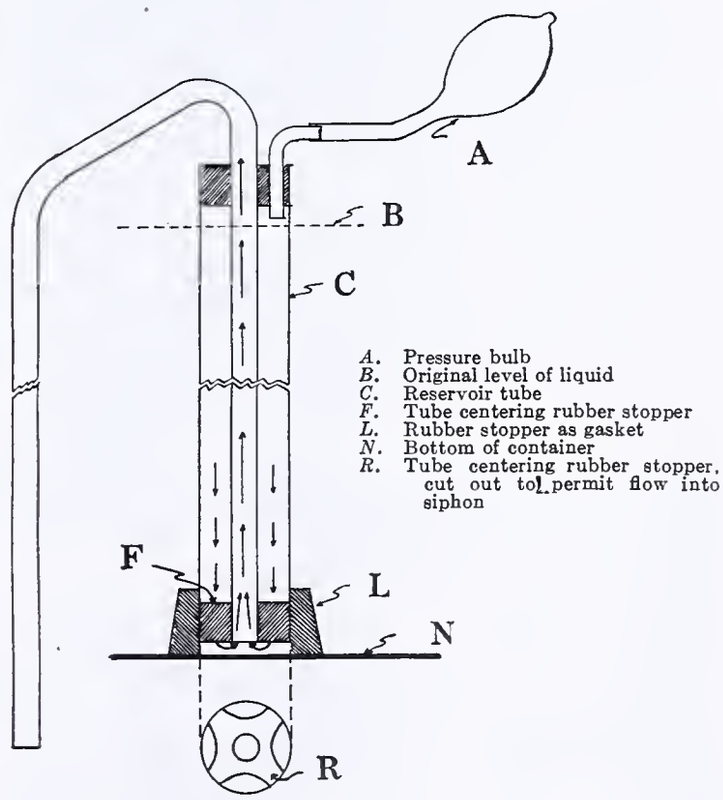

FIGURE 1. DEVICE FOR STARTING SIPHON IN OPEN VESSELS

If the liquid level is too low to provide a volume great enough to fill the siphon tube, suction may be applied to fill the reservoir tube before the pressure is applied to start the siphon. A tee with vacuum connection and pressure bulb attached could well be provided if the need is anticipated.

RECEIVED February 20, 1937.

Apparatus for the Extraction of Liquids with Immiscible Solvents of Greater Density

LINDSAY H. BRIGGS
Auckland University College, Auckland, New Zealand

AN ORDINARY "siphon" apparatus similar to the Soxhlet extractor may be used for extraction of liquids with immiscible solvents of greater density, provided the return tube is sufficiently wide to prevent siphoning, the solvent flowing over continuously as fast as it condenses. The main disadvantage of such apparatus is in arranging the height of the siphon tube, which must vary from experiment to experiment according to the density of the solvent and the amount of liquid to be extracted.

The following apparatus has been found useful in extracting comparatively large amounts of aqueous solutions containing plant material with heavy solvents such as chloroform or trichloroethylene.

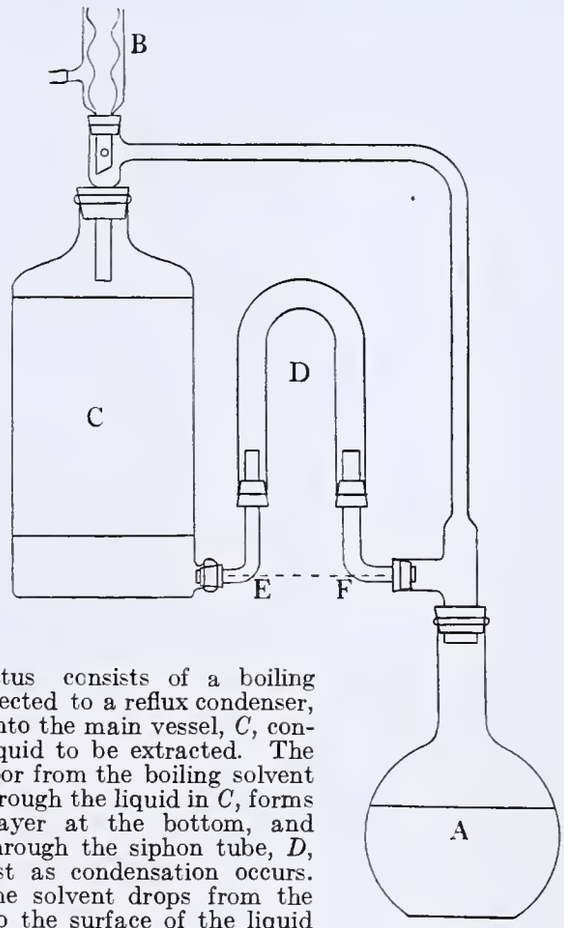

The apparatus consists of a boiling flask, *A*, connected to a reflux condenser, *B*, which fits into the main vessel, *C*, containing the liquid to be extracted. The condensed vapor from the boiling solvent flows down through the liquid in *C*, forms a separate layer at the bottom, and passes over through the siphon tube, *D*, into *A* as fast as condensation occurs. In practice the solvent drops from the condenser onto the surface of the liquid in *C*, breaking up into smaller drops which do not fall straight through but fan out through the liquid. The essential feature is that the siphon tube can swing about the axis *E–F*, enabling the height of liquid in the tube to be adjusted according to the amount of aqueous extract in *C* and the density of the solvent. Major adjustments may be made by sliding the inverted U-tube up or down and minor adjustments by tilting the U-tube, which is then clamped to hold it steady.

There are two essentials in the construction. Firstly, the siphon tube must be of sufficient width to allow the condensate to run over freely. Blocking with solvent owing to the use of smaller bored tubing will immediately cause complete siphoning. Secondly, the solvent must not be boiled so vigorously as to cause a turbulence in the condenser, thus setting up pressure, a sudden release of which may also cause siphoning. With these precautions the above apparatus has been run continuously for several days without attention. The apparatus is made from ordinary laboratory material and there is no reasonable limit to its size.

RECEIVED January 5, 1937

CORRESPONDENCE

Calcium Chlorite as a Volumetric Oxidizing Agent

SIR: In a recent work by Donald T. Jackson and John L. Parsons [IND. ENG. CHEM., Anal. Ed., **15**, 14 (1937)] they propose the use of sodium chlorite as a reagent for volumetric analysis and particularly for the determination of sulfur dioxide, sulfites, and bisulfites. The method is excellent. The authors quote some of my researches on chlorites, adding that the Mathieson Alkali Works, Inc., now manufactures a product containing 97 to 98 per cent of sodium chlorite which may be used for this purpose.

I would like to make two observations: (1) Jackson and Parsons do not mention my article on "Reactions of Oxidation and Reduction with Chlorites" [*Gazz. chim. ital.*, **52**, 58 (1922)] which gives precisely the reaction, $2H_2SO_3 + NaClO_2 = 2H_2SO_4 + NaCl$, that the authors assume as the basis of the titration. (2) The ability to obtain 100 per cent calcium chlorite because of the solubility of calcium chlorate and chloride in alcohol, permits, from my point of view, its more convenient use as the direct standard. The calcium chlorite solution must be made with freshly boiled water free of carbon dioxide.

GIORGIO RENATO LEVI
INSTITUTO DI CHIMICA GENERALE
R. UNIVERSITÀ
PAVIA, ITALY
March 16, 1937

.....

SIR: The pioneering work in the preparation, properties, and uses of the chlorites by G. R. Levi and his associates is fully appreciated by Dr. Jackson and myself with reference to our article on sodium chlorite as a volumetric oxidizing agent in the ANALYTICAL EDITION for January 15. Unfortunately the Italian journals are not readily accessible to us. For many of Mr. Levi's references, therefore, we have had to depend on the abstract journals and the equation to which he refers in his comments was not covered by the abstract.

It has been our experience, however, that the reaction $2H_2SO_3 + NaClO_2 = 2H_2SO_4 + NaCl$ is rather slow and not particularly suited to volumetric analysis. By the addition of a small amount of potassium iodide the reaction is markedly accelerated and is very satisfactory for the purpose we had in mind. In the presence of the iodide ion the reactions appear to be:

$$ClO_2^{--} + 4I^- + 4H^+ \longrightarrow Cl^- + 2I_2 + 2H_2O$$
$$2H_2O + 2I_2 + 2SO_3^{--} \longrightarrow 2SO_4^{--} + 4I^- + 4H^+$$

JOHN L. PARSONS
HAMMERMILL PAPER CO.
ERIE, PA.
April 3, 1937

ANALYTICAL EDITION

INDUSTRIAL and ENGINEERING CHEMISTRY

Harrison E. Howe, Editor

The Phosphotungstate Method for Vanadium

Spectrophotometric Study

E. R. WRIGHT[1] WITH M. G. MELLON, Purdue University, Lafayette, Ind.

A spectrophotometric study of the phosphotungstate method for vanadium was made for the purpose of ascertaining optimum concentration of reagents, effect of acid and diverse ion concentrations, and stability.

Typical transmittancy curves are given covering the most useful range of concentration. Procedures are proposed for application of the method to the determination of vanadium in alloy steels.

LITTLE attention has been paid in the literature to the colorimetric determination of vanadium as a complex phosphotungstate, a method which, as pointed out recently by Sandell (*4*), possesses very definite advantages over the more common peroxide method. The present spectrophotometric study was therefore undertaken to establish the colorimetric behavior of the method under various conditions.

The reaction upon which the method is based is carried out by adding sodium tungstate and phosphoric acid to an acid solution containing quinquevalent vanadium. An immediate reaction thereupon occurs in which a yellow or brownish yellow solution is formed, varying in hue and intensity with the vanadium concentration. The exact chemical nature of the yellow phosphotungstovanadate is somewhat obscure. That it is a coördinated compound of the so-called heteropoly type, in which V_2O_6 groups replace part of the W_2O_7 groups of phosphotungstic acid, seems likely.

HISTORICAL. Although Gibbs (*1*) first appears to have studied the phosphotungstovanadates in 1883, their use in colorimetric analysis did not begin until 1928 when Willard and Young (*2*, *8*) utilized the yellow compound to determine small amounts of vanadium in tungstic acid residues. Vinogradov (*5*, *6*) applied the method to the determination of vanadium in plant ash, while Sandell (*4*) recently adapted it to rock analysis after a preliminary extraction separation.

Experimental

REAGENTS. A standard vanadium solution was made up as shown in the following paragraphs.

C. P. vanadium pentoxide was dissolved in a slight excess of sodium hydroxide, the solution was filtered, and ammonium vanadate was precipitated by addition of ammonium chloride. The ammonium vanadate was filtered off, dried, and ignited to vanadium pentoxide in a muffle furnace at about 500° C. A standard vanadium solution (0.020 *M* in $NaVO_3$) was made by dissolving a weighed portion (1.819 grams) in sodium hydroxide solution, adding a slight excess of sulfuric acid, cooling, and diluting to 1000 ml. This solution was then standardized with potassium permanganate solution in the ordinary way.

All other reagents were of analytical reagent quality, no further attempt at purification being made.

APPARATUS. The Purdue spectrophotometer, described by Mellon and Kasline (*3*), was used for the determination of all spectrophotometric curves. The instrument has been modified somewhat, so that it is now of an automatic recording type, nearly all curves being recorded directly.

PROCEDURE. In general, solutions were made up in the following manner: By means of a pipet the required volume of standard vanadium solution containing 1 mg. of vanadium per ml. was measured into a 250-ml. beaker. Acid, distilled water, solution containing diverse ion, phosphoric acid, and sodium tungstate were then added in order, and the solution was brought to boiling, cooled, and diluted to 100 ml. Unless the effect of some other acid was of interest, nitric acid was always employed. Solutions containing diverse ions were added only during the experiments on the effect of diverse ions. The spectrophotometric curves were then determined, either being recorded directly by the instrument or the numerical data being taken at each 10 mμ interval at a 5 or 10 mμ band width. In most of this work the solution in question was compared with a standard solution whose curve was determined at the same time under the same conditions; consequently use of the more rapid direct-recording method was considered preferable.

Discussion of Results

Since in this study a large number of spectrophotometric curves of significance were determined, it was considered impractical to attempt to report the data in graphical form. Typical curves for 1-cm. cells are presented in Figure I covering the most useful concentrations for the phosphotungstovanadate complex. Because relative transmittancy values are of as much worth as absolute, the average and maximum differences between the curve in question and a standard curve are reported. The average of these transmittancy differences covers the range 400 to 540 mμ, the significant portion of the curve, and is made without regard to sign. If the maximum difference is about 5 per cent or less and the average difference is 2 per cent or less, the solutions in general appear identical to the eye.

RATIO OF SODIUM TUNGSTATE TO PHOSPHORIC ACID. As is evident from Table I, the concentrations of sodium tung-

[1] Present address, Dow Chemical Co., Midland, Mich.

TABLE I. RATIO OF SODIUM TUNGSTATE TO PHOSPHORIC ACID[a]

No.	0.5 M Na_2WO_4	90% H_3PO_4	Moles H_3PO_4: Moles Na_2WO_4	Transmittancy Differences, Unknown and Standard Max.	Av.
	Ml.	*Ml.*		%	%
1	0.5	0.01	6.6:1	+40	20
2	0.5	0.05	33:1	+40	20
3	0.5	0.1	66:1	+40	20
4	0.5	0.5	330:1	+42.5	22
5	1.0	0.3	9.9:1	+15.5	7.4
6	2.0	0.2	3.3:1	− 8.0	3.3
7	2.0	0.5	8.3:1	− 6.5	2.7
8	2.0	1.0	16:1	− 8.0	3.2
9	2.0	3.0	48:1	− 4.0	1.9
10	2.0	5.0	83:1	+ 6.5	3.1
11	4.0	1.2	9.9:1	± 1.5	0.7
12	5.0	0.2	1.3:1	− 1.5	0.4
13	5.0	0.5	3.4:1	− 1.5	0.4
14	5.0	1.0	6.6:1	0	0
15	5.0	3.0	19:1	0	0
16	5.0	5.0	33:1	+ 5.0	1.2
17	8.0	2.4	9.9:1	± 1.5	0.8
18	10.0	1.0	3.3:1	+ 2.0	0.5
19	10.0	3.0	9.9:1	+ 2.0	0.5
20	10.0	5.0	16:1	+ 5.0	1.4
21	10.0	10.0	33:1	+ 6.0	1.9
22	10.0	15.0	48:1	+ 6.0	1.9
23	15.0	5.0	11:1	+ 4.0	1.0
24	15.0	10.0	22:1	+ 7.5	2.5
25	15.0	15.0	33:1	+ 7.5	2.5
26	10 ml. 10% phosphotungstic acid	10.0	...	+24.5	9.3

[a] No. 15 taken as standard; all solutions contain 5.0 mg. of vanadium in 1.00-cm. cells.

state and phosphoric acid may vary over a rather wide range without effecting a sensible change in the color characteristics of the solution. In general the molecular ratio of phosphoric acid to sodium tungstate may vary from 3 to 20 without causing any change visible to the eye. The solution must be at least 0.01 M in sodium tungstate for development of maximum color, and preferably not be more concentrated than 0.1 M. In lower concentrations of sodium tungstate, the solutions have a more brownish hue. A solution is recommended which is 0.025 M in sodium tungstate and 0.5 M in phosphoric acid, or which contains 5 ml. of 0.5 M sodium tungstate solution and 3 ml. of 90 per cent phosphoric acid per 100 ml.

Vinogradov (*6*) recommends the use of 10 per cent phosphotungstic acid. Experiments with this reagent, however, gave solutions whose intensity was much less than was obtained by the use of phosphoric acid and sodium tungstate alone. The effect of concentrations of reagents as recommended by Vinogradov is shown in Table I, No. 26.

EFFECT OF ACID. Table II shows the effect of various acids in concentrations up to 2.4 N. Up to this concentration, the solutions display a maximum variation in transmittancy of about 3 per cent at any wave length, while the total variation in hue and intensity is considerably less than can be detected visually. It was found, however, that the effect of acid was much greater in the cold, a distinctly brownish color being formed which was roughly proportional to the amount of acid and which faded slowly after several hours to the true yellow of phosphotungstovanadate. It was found necessary, therefore, to heat the solutions to boiling, such treatment apparently hastening the attainment of equilibrium.

In more dilute solutions, containing 0.25 mg. of vanadium, the maximum color is not developed immediately in the cold, although the difference is not great enough to be of importance in visual work. The cold solution, on standing 2 or 3 hours, finally reaches the same point of equilibrium as the boiled solution. If the solution, therefore, contains less than 1 mg. of vanadium per 100 ml. or if matching is done by a duplication method, boiling is unnecessary, provided that ferric chloride is absent.

EFFECT OF DIVERSE IONS. Table III shows the effect of a number of diverse ions or solutes. In the case of interfering ions, a maximum concentration is specified at which an error of about 2 per cent would occur in comparing the solution with a standard containing none of the ion in question.

In addition to the ions listed in Table III, the following substances were found to have no effect on the concentrations stated (total volume, 100 ml.): 3 grams of NaCl; 5 grams of $NaNO_3$; 500 mg. of Mg^{++}, Ca^{++}, Sr^{++}, Ba^{++}, Zn^{++}, Cd^{++}, Hg^{++}, Al^{+++}, Pb^{++}, As (as H_3AsO_4), $C_2H_3O_2^-$, and Br^-; 25 mg. of Be^{++}; 100 mg. of Ag^+; 125 mg. of Li^+; 10 mg. of Th^{+4}; 100 mg. of ClO_3^-; 50 mg. of SiO_2 (as Na_2SiO_3); 100 mg. of $C_2O_4^{--}$; 20 mg. of CN^-; 100 mg. of citrate ion; and 100 mg. of tartrate ion.

At least four types of reactions were found to take place between the diverse ion and the other constituents of the solution. The first is the precipitation of the phosphotungstic acid by ammonium or potassium ions. Ammonium ion must be nearly completely absent. The second is the precipitation of some basic compound or slightly soluble phosphate. Antimony, tin, titanium, and zirconium were found to interfere in this way and, if present in large amounts, must be removed. The third is the formation of a color with the phosphotungstic acid. Only one element, molybdenum, was found to interfere in this way, and then, as shown in Table III, only in relatively large concentrations. The fourth type of reaction is the reduction of the phosphotungstic acid by some reducing agent such as stannous, iodide, or thiocyanate ion. Ordinarily reducing agents are eliminated during the process in which the vanadium is oxidized to the quinquevalent state; consequently the effect of such reducing agents is of little importance.

Ferric chloride appears to have an effect in the cold out of all proportion to its concentration. Thus 10 mg. of ferric ion as ferric chloride in a solution containing 0.25 mg. of vanadium causes development of a brownish hue which makes

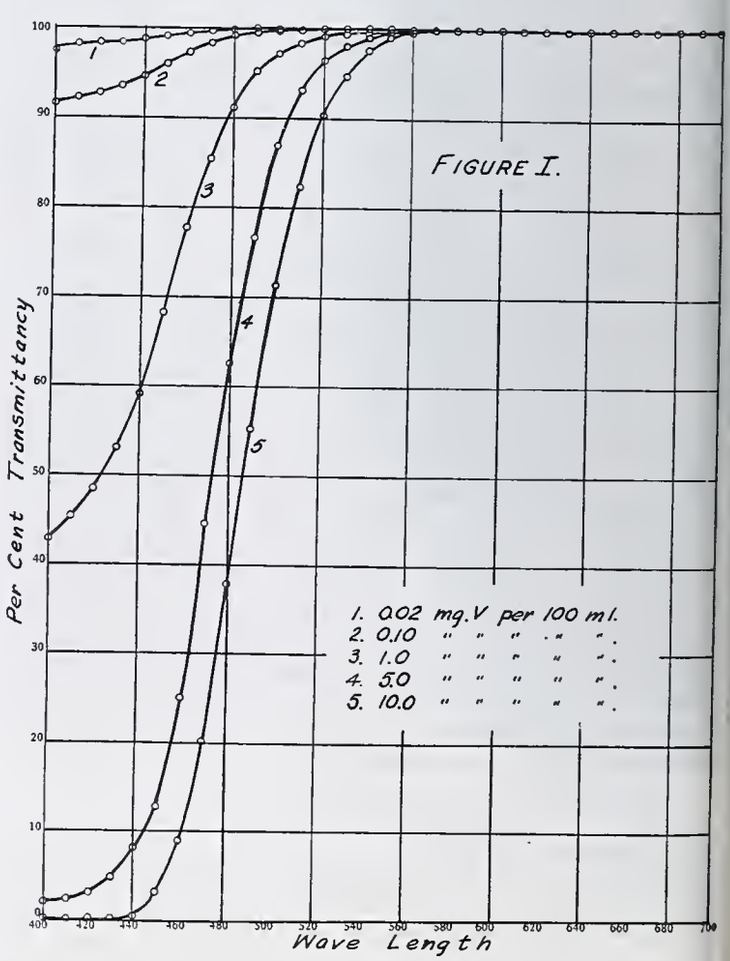

visual matching with a standard impossible and which disappears on heating the solution to boiling. The authors were not able to corroborate Sandell's observation (*4*) that aluminum ion also interferes.

There is also a large class of ions which interfere because of their own color. These ions, for which maximum limits of concentration are specified, are the most important source of interference in the determination of vanadium by this method. In the case of ferric ion, a fairly large concentration, 100 mg. of iron as ferric nitrate, may be present without interference, since a colorless complex is formed with the phosphoric acid. Above a concentration of 200 mg. the interference becomes very appreciable even though additional phosphoric acid is added.

Of the elements mentioned above, none is likely to occur in vanadiferous material in amounts which might cause interference except iron and chromium. Molybdenum might interfere in certain high-molybdenum steels although in other types of materials no interference is likely.

Stability. The data showing the effect of age on a series of standard solutions may be summarized in the statement that the color is entirely stable for 24 hours, but fades slowly thereafter until at the end of a 2-week period a diminution of about 10 per cent has taken place.

Applications. Vanadium determinations are required most frequently in two kinds of materials: rocks or minerals, and ferrous alloys. Sandell (*4*) has applied the phosphotungstate method to the determination of vanadium in silicate rocks, but no mention is made in the literature of its application to ferrous alloys.

Vanadium occurs as an alloying agent in ferrous alloys up to about 2 per cent along with iron, chromium, tungsten, and other elements. As shown previously, ferric ion does not interfere up to 100 mg. per 100 ml., and chromate up to 1 mg. of chromium per 100 ml. Assuming that a sample containing 1 mg. of vanadium is to be taken, iron does not interfere if the vanadium content is 1 per cent or more, while chromium will interfere if present in more than 1 per cent, as is ordinarily the case. Three classes of vanadium alloys may therefore be designated: (*a*) high-vanadium alloys (V, Cr, W alloys), containing 0.7 to 2.0 per cent of vanadium, in which chromium interferes but iron does not; (*b*) medium-vanadium (V, Cr alloys), containing 0.1 to 0.7 per cent of vanadium, in which both iron and chromium interfere; and (*c*) low-vanadium alloys (plain carbon steel, cast iron, etc.), containing less than 0.1 per cent of vanadium, in which it may be necessary to separate vanadium from a number of elements.

It was not considered practical to attempt to compensate for other colored ions by adding to the standard an amount equal to that present in the unknown, since the amount of such ions was not always known and the sensitivity would have been thereby greatly decreased.

A method for the separation of vanadium from chromium which was proposed by Willard and Gibson (*7*) was found to be satisfactory and the following procedures are based upon its use. Vanadium and chromium are oxidized by boiling with perchloric acid, the solution is diluted, lead perchlorate solution is added, and the resultant precipitate of lead chromate is filtered off. No attempt is made to dissolve the tungsten, nor is any effort made to recover vanadium from the tungstic oxide residue, such losses being too small to cause appreciable error in a visual colorimetric procedure.

Procedure

Cr, W, V Steels, 0.7 to 2.0 Per Cent Vanadium. Weigh 150 mg. of sample to the nearest milligram and transfer to a 100-ml. beaker. Add 10 ml. of hydrochloric acid (1 to 1), cover, and warm until all action has ceased. Push aside the cover, add a drop of nitric acid (1 to 1), and boil, swirling the liquid to make sure that no tungsten sticks to the bottom. Continue to add nitric acid drop by drop until the tungsten is oxidized and appears as a bright yellow residue with no black particles visible. Add from a graduated cylinder 7 ml. of perchloric acid (60 per cent) and evaporate to fuming. Boil gently until the solution assumes the characteristic orange-red color of dichromate and then 2 or 3 minutes longer. Cool, add 40 ml. of water, heat to boiling, and add 5 ml. of 0.5 *M* lead perchlorate solution. Cool to room temperature and filter through a Gooch crucible, washing with a little cold water. To the filtrate add 10 ml. of nitric acid (1 to 1), 3 ml. of phosphoric acid (90 per cent), and 5 ml. of 0.5 *M* sodium tungstate solution. Heat to boiling, cool, and dilute to 100 ml. Compare with a sample containing 1.5 mg. of vanadium made by adding to the proper number of milliliters of standard vanadium solution, 60 ml. of water, 10 ml. of nitric acid (1 to 1), 3 ml. of phosphoric acid (90 per cent), and 5 ml. of sodium tungstate solution (0.5 *M*), heating to boiling, cooling, and diluting to 100 ml. Or compare in Nessler tubes with a series of standards made in a similar manner.

Cr, V Steels, 0.1 to 0.7 Per Cent Vanadium. Weigh a 0.5-gram sample to the nearest milligram. Transfer to a 250-ml. beaker, add 20 ml. of hydrochloric acid (1 to 1), cover, and heat until the steel is decomposed. Add 0.5 ml. of concentrated nitric acid drop by drop to oxidize the iron, evaporate to about 10 ml., add 5 ml. of concentrated hydrochloric acid, and transfer to a separatory funnel with not more than 5 ml. of water. Cool, add 30 ml. of ether, and extract most of the iron. Warm the aqueous layer on a hot plate to remove the ether, add 7 ml. of perchloric acid (60 per cent), evaporate to fuming, and continue as in the procedure above.

Tables IV and V show typical results which were obtained with these methods. The data in Table IV were obtained by

Table II. Effect of Acid

No.[a]	Acidity	Age	Treatment	Transmittancy Differences, Unknown and Standard Max.	Av.
		Min.		%	%
1	None	15	Boiled	− 3.5	1.1
2	2.4 *N* in HNO_3	15	Boiled	+ 5.0	1.2
3	2.4 *N* in H_2SO_4	15	Boiled	0	0
4	2.4 *N* in HCl	15	Boiled	+ 3.0	0.7
5	2.7 *N* in $HClO_4$	15	Boiled	+ 7.5	2.3
6	None	15	Cold	+11.5	3.8
7	0.3 *N* in HNO_3	15	Cold	− 9.0	5.3
8	1.2 *N* in HNO_3	15	Cold	−16.5	8.1
		Hours			
9	None	5	Cold	+ 3.5	1.0
10	0.3 *N* in HNO_3	5	Cold	+ 3.5	1.0
11	1.2 *N* in HNO_3	5	Cold	+ 3.5	1.0
		Min.			
12	0.6 *N* in HNO_3	15	Cold	+ 5.0	1.5
13	0.6 *N* in HNO_3	15	Boiled	0	0

[a] Solutions 1 to 11 contain 5.0 mg. of vanadium per 100 ml.; solutions 12 to 13, 0.25 mg. of vanadium per 100 ml.; solutions 1 to 11 in 1.00-cm. cells, 12 to 13 in 4.98-cm. cells; solutions 3 and 13 taken as standards.

Table III. Effect of Diverse Ions[a]

	Substance	Limiting Concentration *Mg. per 100 ml.*	Effect
1	NH_4Cl	10 NH_4	Precipitates NH_4 phosphotungstate
2	KCl	75 K	Precipitates K phosphotungstate
3	$SbCl_3$	10 Sb	Precipitates basic compound
4	$Bi(NO_3)_3$	15 Bi	Precipitates basic compound
5	$SnCl_4$	25 Sn	Precipitates basic compound
6	$TiOSO_4$	20 Ti	Precipitates phosphate
7	$ZrOCl_2$	1 to 3 Zr	Precipitates phosphate
8	$Cu(NO_3)_2$	10 Cu	Color of ion
9	$Co(NO_3)_2$	10 Co	Color of ion
10	$Ni(NO_3)_2$	35 Ni	Color of ion
11	$Fe(NO_3)_3$	100 Fe	Color of ion
12	$MnSO_4$	40 Mn	Color of ion
13	$K_2Cr_2O_7$	1 Cr	Color of ion
14	$UO_2(C_2H_3O_2)_2$	100 U	Color of ion
15	KCNS	>25 CNS	Reduces complex
16	KI	10 I	Reduces complex
17	Na_2MoO_4	50 Mo	Color with reagents
18	$Fe(NO_3)_3$	100 Fe	Color of ion
19	$FeCl_3$	20 Fe	Color of ion
20	$FeCl_3$	<10 Fe	Changes hue
21	$AlCl_3$	>100 Al	None
22	$AlCl_3$	>100 Al	None

[a] All solutions 0.025 *M* in Na_2WO_4 and 0.5 *M* in H_3PO_4; all contain 5.0 mg. of vanadium, except Nos. 17 to 21 which contain 0.25 mg. of vanadium; all solutions boiled except Nos. 19 and 20 which were kept at room temperature; all in 1.00-cm. cells except Nos. 17 to 21 in 4.98-cm. cells; for effect of $AlCl_3$ and $FeCl_3$ in the cold see Nos. 19 and 20.

Table IV. Analysis of Ferrous Alloys[a]

Type	V	Cr	W	Sample Weight	Transmission Differences, Unknown and Standard 420 mμ	460 mμ	500 mμ	520 mμ
	%	%	%	*Gram*	%	%	%	%
Bureau of Standards No. 50a	0.97	3.52	18.25	0.105	0.1	0.5	−0.2	−0.6
Chromovan	0.79	12	...	0.129	−2.2	0.2	−0.7	−0.5
Bureau of Standards No. 30a	0.21	1.02	...	0.486	−1.2	0.3	−0.1	−0.5
Bureau of Standards No. 30c	0.235	0.977	...	0.434	0.1	0.7	−0.3	−0.3

[a] Wave length in millimicrons.

Table V. Analysis of Ferrous Alloys

No.	V	Cr	W	V Found
	%	%	%	%
1[a]	1.0	3.5	18.2	0.97
2[a]	1.01	4.5	17.5	0.96
3[b]	0.21	1.02	..	0.21
4[b]	0.235	0.977	..	0.21

[a] Commercial alloys.
[b] Bureau of Standards alloys, Nos. 30a and 30c, respectively.

weighing out enough sample to give 1.02 mg. of vanadium, and after application of the above procedures the transmission data were determined in the spectrophotometer both for the unknown solution and for a standard containing 1.02 mg. of vanadium. The transmission differences at four wave lengths between the standard and unknown solutions are shown in Table IV. These differences are for the most part less than 2 per cent, showing that any error in the procedure is less than that inherent in a visual colorimetric method.

In Table V are shown the results which were obtained with the above procedures by comparing in 50-ml. Nessler tubes a sample containing from 1 to 1.5 mg. of vanadium per 100 ml. with a series of standard solutions. The per cent of vanadium found is the average of observations made by several persons, individual results varying from 5 to 10 per cent from the average.

Summary

1. For determining vanadium by the phosphotungstate method a solution is recommended which is 0.025 *M* in sodium tungstate, 0.5 *M* in phosphoric acid, and 0.6 *N* in nitric, sulfuric, hydrochloric, or perchloric acids. Considerable leeway is possible in the choice of these conditions.

2. Heating the solution to boiling after addition of the reagents is necessary if more than 1 mg. of vanadium is present per 100 ml. or if the solution contains more than traces of ferric chloride.

3. Maximum concentration of diverse ions is specified.

4. The solutions are stable under recommended conditions for at least 2 days and fade only slowly thereafter.

5. Procedures are proposed for the application of the method to the determination of vanadium in alloy steels.

Literature Cited

(1) Gibbs, O. W., *Am. Chem. J.*, 5, 395 (1883).
(2) Hillebrand and Lundell, "Applied Inorganic Analysis," p. 354, New York, John Wiley & Sons, 1929.
(3) Mellon, M. G., and Kasline, C. T., Ind. Eng. Chem., Anal. Ed., 7, 187 (1935).
(4) Sandell, E. B., *Ibid.*, 8, 336 (1936).
(5) Snell, F. D., and Snell, C. T., "Colorimetric Methods of Analysis," p. 373, New York, D. Van Nostrand Co., 1936.
(6) Vinogradov, A. P., *Compt. rend. acad. sci. U. R. S. S.*, 1931A, 249–52.
(7) Willard, H. H., and Gibson, R. C., Ind. Eng. Chem., Anal. Ed., 3, 88 (1931).
(8) Willard, H. H., and Young, P., Ind. Eng. Chem., 20, 764–8 (1928).

Received March 6, 1937. Abstracted from part of a dissertation submitted by E. R. Wright to the graduate school of Purdue University in partial fulfillment of the requirements for the degree of doctor of philosophy.

Quantitative Electrodeposition of Zinc from Acid Citrate Solutions

R. WINCHESTER and L. F. YNTEMA, St. Louis University, St. Louis, Mo.

THE quantitative electrodeposition of metals permits of clean, rapid, and accurate analyses; but the methods described for the determination of zinc have not been considered as satisfactory as other gravimetric or volumetric procedures. A comprehensive study of important electrolytic procedures was made by Spear, Wells, and Dyer (*5*), who found that the alkaline zincate method was to be preferred, but that determinations would be, on the average, 1 per cent high. Investigations by Nickolls and Gaskin (*1*) have substantiated this observation.

The quantitative electrodeposition of zinc from acid citrate solutions was suggested by Parodi and Mascazzini (*2*) and recommended by Smith (*4*). Sand and Smalley (*3*) also recorded a method using citric acid, but their results do not show the accuracy requisite to an approved quantitative method. Wolman (*8*) observed that the presence of citric acid interfered with deposition. The available information on such important factors as current density, pH, and interfering ions is relatively incomplete and the purpose of this investigation is to establish the optimum conditions with respect to citrate concentration, pH, deposition time, current density, and temperature, as well as to determine the effect of the presence of a number of foreign anions and cations.

Experimental

All reagents were of Mallinckrodt Chemical Works' analytical reagent quality. The metallic zinc was reported to have a maximum limit of 0.017 per cent impurity as iron, oxidized by potassium permanganate, and of 0.06 per cent impurity insoluble in sulfuric acid. A 5-gram sample so tested left no weighable residue. The zinc was melted in a porcelain crucible and drawn up into Pyrex tubing of 2-mm. inside diameter. The glass was removed and the zinc rod cut into lengths weighing approximately 0.2 gram each, which were weighed at once to eliminate any error due to subsequent corrosion. A 2.0580-gram sample was dissolved in sulfuric acid and the solution diluted to 500 ml. Three 25-ml. portions, each containing 0.1029 gram of zinc, were analyzed by precipitating the zinc as sulfide in formic acid solution and converting the sulfide to sulfate by the method of Sullivan and Taylor (*6*). In each determination results 0.0001 gram high were obtained. As this was well within the range of experimental error, it was assumed that the zinc was satisfactory. A further check was obtained by determining the zinc as zinc ammonium phosphate.

Preliminary experiments indicated that the pH was the most important factor involved in the determination and a systematic series of experiments was carried out for the purpose of establishing the permissible limits of pH and citrate concentration. In this series the pH varied from 2.9 to 7.4 with an accuracy of 0.02 unit in solutions whose citrate concentrations had the following values, expressed in moles per liter: 0.0250, 0.0312, 0.0375, 0.0437, 0.0500, 0.0625, and 0.0750.

The samples were prepared by dissolving weighed metallic zinc in 10 ml. of 3 *M* sulfuric acid and adding the required amount of citric acid. The solutions were diluted to approximately 175 ml. and the pH, as measured by a glass electrode, was adjusted by adding 40 per cent sodium hydroxide. The zinc was deposited on copper or copper-plated gauze cathodes having an approximate area of 1 sq. dm. The solutions were stirred by a rotating platinum anode. A current density of 1 ampere per sq. dm. was employed for a time interval of 2 hours. The plates were washed by the siphon method, dipped in acetone, and dried for 5 minutes at 85° C.

Table I. Effect of pH and Citrate Concentration[a]

pH	Error 0.0312 *M* citrate	Error 0.0375 *M* citrate	Error 0.0437 *M* citrate
	Gram	*Gram*	*Gram*
3.8	±0.0000	+0.0001 +0.0002	−0.0009
4.1	+0.0002	+0.0001 −0.0001	+0.0001
4.4	−0.0002	.....	+0.0001
4.6	.....	+0.0002 −0.0002	.....
4.7	−0.0001	.....	+0.0002
4.9	.....	−0.0001 −0.0001	.....
5.0	+0.0001	.....	+0.0001
5.2	.....	−0.0002	.....
5.3	+0.0003	−0.0001	+0.0004
5.4	.....	+0.0002	.....
5.5	.....	+0.0002	.....

[a] In each experiment approximately 0.2 gram of zinc, accurately weighed, was used.

It is indicated in Table I that pH values of 4.0 to 5.0 and that citrate concentrations of 0.0312 to 0.0437 *M* may be employed to give good results. The data do not represent average or selected values; every determination is recorded. In a total of fourteen determinations made the maximum error was 0.0002 gram, representing in the 0.2-gram sample a maximum error of 0.1 per cent and an average error of 0.0021 per cent. There was no tendency toward either positive or negative errors. The investigation was extended to either side of the limits of pH and citrate concentrations shown, but in the extended range of each of these variables the results were unreliable, although they were frequently accurate.

The importance of having the pH closely regulated is shown by Figure 1. When the pH was less than 3.2, the deposits were usually localized and grossly crystalline and were accompanied by large negative errors. When the pH was greater than 6.5, the deposits were dark and accompanied by large positive errors. Between these values the plates were smooth and bright and exhibited no tendency toward oxidation when exposed to air for several hours.

A study of the time interval necessary for complete deposition has shown that with samples weighing 0.2 gram, 80 to 90 minutes are sufficient and the deposition may be lengthened to 2 hours. Complete removal of the zinc may be determined by either of two methods: The addition of 0.5 ml. of saturated hydrogen sulfide water to 1 ml. of the electrolyte should produce only a very faint opalescence. The addition of 0.1 ml. of 0.5 *M* potassium ferrocyanide to 1 ml. of the electrolyte should cause only a faint opalescence after a time interval of 1 minute. The sulfide test is recommended, although either may be used. The deposition and precipitation experiments are shown in Table II.

Table II. Time for Complete Deposition

Time	Error	Potassium Ferrocyanide	Hydrogen Sulfide
Min.	*Gram*		
15	−0.0524	Heavy ppt.	Heavy ppt.
30	−0.0150	Heavy ppt.	Heavy ppt.
45	−0.0085	Heavy ppt.	Heavy ppt.
60	−0.0012	Heavy ppt.	Light ppt.
75	+0.0003	Very light ppt.	Marked opalescence
90	+0.0003	Faint opalescence	Faint opalescence
105	+0.0001	No opalescence in 1 minute	No opalescence after 8 hours
120	+0.0002	No opalescence in 6 minutes	No opalescence after 8 hours

Current densities of 0.75, 1.00, and 1.25 amperes per sq. dm. gave quantitative results, but with 1.50 there was heavy needling and the deposits had dark areas. An initial temperature of 25° C. gave accurate determinations. There was an increase of 10° to 15° C. during the electrolysis. Other temperatures were not used. In practice methyl red–methylene blue may be used to fix the pH of the solution at its proper value. The pH should be the same as or slightly lower than the pH at which the indicator is colorless.

That care is required in removing the cathode from the bath is emphasized by a determination of the solubility of the deposited zinc in its electrolyte. The zinc in four solutions, each containing approximately 0.2 gram and at the optimum pH and citrate concentration, was deposited and the cathodes were carefully removed. The errors for the determinations were +0.0001, +0.0003, +0.0001, and +0.0002 gram, respectively. The zinc deposits were again immersed in the electrolyte for the indicated time intervals and Table III shows the loss in weight caused by solution of the deposited zinc. If convenient, the plates should be washed by the siphon method; but the wash-bottle method may be used if the cathodes are carefully and thoroughly washed as the beakers are lowered while the electrical circuit is still closed.

The development of a quantitative method for the determination of zinc must include a study of the interference to be expected when ions other than zinc are present. The ammonium-ion concentration was varied from 0.0001 to 2.0 *M* without affecting the quantitative character of the deposition.

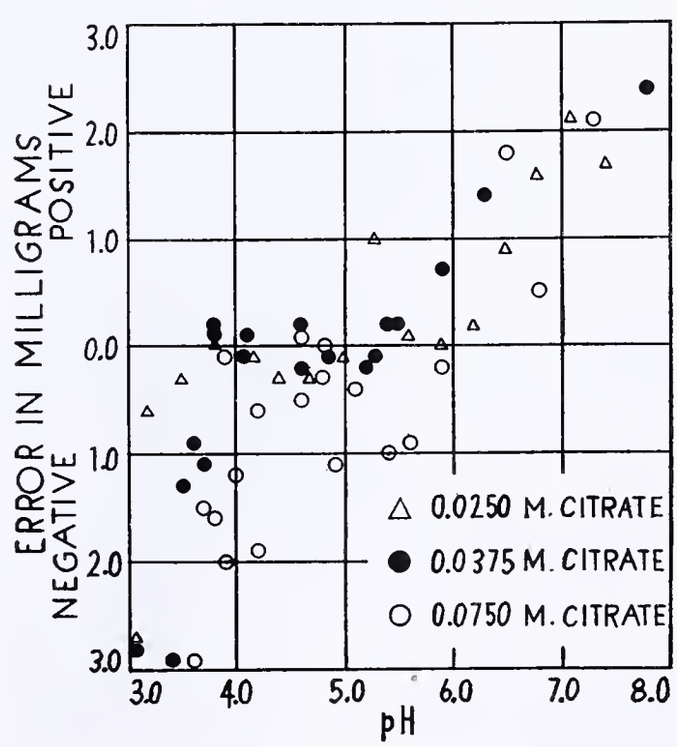

Figure 1. The Effect of pH

Table III. Solubility of Zinc in Electrolyte

Zinc Taken	Zinc Found	Zinc Loss	Immersion Time
Gram	*Gram*	*Gram*	*Sec.*
0.1994	0.1956	0.0038	30
0.2001	0.1946	0.0055	60
0.2036	0.1937	0.0099	90
0.2037	0.1901	0.0136	120

Table IV. Effect of Nitrate Ions

NO_3^-	Zinc Taken	Zinc Found	Error	Appearance
Moles/l.	*Gram*	*Gram*	*Gram*	
0.10	0.2035	0.0088	−0.1947	Localized
0.01	0.2038	0.2021	−0.0017	Good
0.001	0.1993	0.1994	+0.0001	Good
0.0001	0.2010	0.2008	−0.0002	Good

Table IV shows that the nitrate-ion concentration may be as large as 0.001 *M* without interfering with the determination. For the complete deposition of copper from nitrate solutions, the addition of urea has been suggested (*7*). When urea is added to the zinc electrolyte it not only fails to improve the deposition but actually results in an even larger negative error; therefore urea must not be present in the electrolyte. The determination of zinc in alloys frequently involves the previous determination of nickel as nickel dimethylglyoxime. It has been learned that this reagent must not be present, since a concentration as low as 0.002 *M* causes a large negative error, which could not be prevented by heating with concentrated sulfuric acid to sulfur trioxide fumes. Of the more common metals aluminum, chromium, magnesium, and tin do not interfere with the deposition. Antimony and arsenic prevent complete deposition, while bismuth, cadmium, cobalt, copper, iron, lead, manganese, mercury, nickel, and silver are deposited with the zinc. In each experiment 0.050 gram of foreign metal was added to a 0.2-gram sample of zinc.

Recommended Procedure

Prepare a zinc sulfate solution free from heavy metals except aluminum, chromium, magnesium, and tin. To this solution, contained in a volume of about 175 ml., add 1.5 grams of citric acid and sufficient 40 per cent sodium hydroxide to make the solution neutral or very slightly acid to methyl red–methylene blue. Dilute the solution to 200 ml. and electrolyze for 1.5 to 2.0 hours or until the addition of 0.5 ml. of saturated hydrogen sulfide water to 1 ml. of the electrolyte produces not more than a faint opalescence. Use a copper or copper-plated gauze cathode and a rotating platinum anode. The current density should be 1 ampere per sq. dm. To prevent mechanical loss of the solution, the beaker should be covered with a split watch glass. Wash the deposit carefully as it is being removed from the electrolyte, dip into acetone, dry at 85° C., and weigh.

The method has been successfully used by college sophomores for the determination of zinc in brass.

Summary

Zinc may be determined quantitatively by electrodeposition from an acid sulfate solution containing 0.0375 mole per liter of citric acid if the pH is between 4 and 5. With a current density of 1 ampere per sq. dm. deposition is complete in 1.5 hours. Nitrate ions, dimethylglyoxime, urea, and the following foreign metals interfere with the deposition: antimony, arsenic, bismuth, cadmium, cobalt, copper, iron, lead, manganese, mercury, nickel, and silver. No interference is caused by ammonium ions, aluminum, chromium, or tin.

Literature Cited

(1) Nickolls, L. C., and Gaskin, J. G. N., *Analyst*, 59, 391 (1934).
(2) Parodi, G., and Mascazzini, A., *Gazz. chim. ital.*, 7, 169 (1877).
(3) Sand, H. J. S., and Smalley, William, *Chem. News*, 103, 14 (1911).
(4) Smith, Edgar F., "Electroanalysis," 4th ed., p. 109, Philadelphia, P. Blakiston's Son & Co., 1907.
(5) Spear, E. B., Wells, E. E., and Dyer, B., *J. Am. Chem. Soc.*, 32, 530 (1910).
(6) Sullivan, E. C., and Taylor, W. C., J. Ind. Eng. Chem., 1, 476 (1909).
(7) Willard, H. H., and Furman, N. H., "Elementary Quantitative Analysis," 2nd ed., p. 382, New York, D. Van Nostrand Co., 1935.
(8) Wolman, L., *Z. Elektrochem.*, 3, 537 (1897); *J. Chem. Soc.*, 74Aii, 50 (1898).

Received March 26, 1937. Presented before the Division of Physical and Inorganic Chemistry at the Midwest Regional Meeting, Louisville, Ky., October 31 to November 2, 1935. Abstract of a dissertation presented by R. Winchester to the faculty of the graduate school of St. Louis University in partial fulfillment of the requirements for the degree of doctor of philosophy, June, 1937.

The Determination of Lead Peroxide

A New Procedure and the Comparison of Formerly Used Procedures

J. N. MRGUDICH and G. L. CLARK, Department of Chemistry, University of Illinois, Urbana, Ill.

Many methods, each reported as giving accurate and consistent results, have been proposed for the analysis of lead peroxide. As is perhaps to be expected, there is no general agreement as to the most satisfactory method, each having been criticized by several investigators. Unfortunately, it appears impossible at the present time to test any method directly and conclusively, since absolutely pure lead peroxide or a sample containing a known amount of lead peroxide has never been available. This point has been amply emphasized by LeBlanc and Eberius (*7*).

The purpose of this investigation is an attempt to select from the most common procedures the one which seems to yield the most accurate results. A given sample of Merck's c. p. brown lead oxide was analyzed by each method and the results were compared. If two or more methods yielded the same values and if the procedures seemingly satisfied the requirements of a satisfactory quantitative analysis, it was assumed that the validity of these methods had been established.

Examination of Existing Methods

All the proposed determinations of lead peroxide are dependent upon the oxidizing power of tetravalent lead. The sample is placed in solution by reduction to a soluble divalent lead compound, the corresponding oxidation being suitably measured, usually by volumetric methods. The most common procedures are the Bunsen, the Diehl-Topf, the Schaeffer, and the Lux.

Bunsen Method. The Bunsen (*19*) method depends upon the liberation of chlorine when lead peroxide is dissolved in an excess of hot hydrochloric acid, the chlorine being absorbed in excess potassium iodide and the liberated iodine titrated with

standard sodium thiosulfate. Pamfilov and Ivanceva (*14*) feel that the method is basically unreliable because of a side reaction between chlorine and water vapor. The LeBlanc and Eberius modification (*7*) is designed primarily to increase the ease of manipulation and does not circumvent this side reaction.

Using the LeBlanc-Eberius modified Bunsen procedure on the sample of Merck's C. P. lead peroxide, the authors have found lead peroxide contents of 92.2, 91.7, 91.3, 92.0, and 92.2 per cent (average, 91.9 per cent). These analyses were made strictly according to the specific directions given by LeBlanc and Eberius. As will be shown, there is reason to believe that these results are low. The addition of a multiple-bulb potassium iodide absorption tube in series with the five-bulb tube recommended by LeBlanc and Eberius resulted in a more nearly quantitative absorption of chlorine with a subsequent increase of the average 91.9 per cent of lead peroxide to an average value of 96.3 per cent. The method is cumbersome and slow and not to be recommended except for the analysis of lead peroxide samples extremely resistant to solution.

Table I. Determination of Lead Peroxide

Sample	Weight	0.03036 *N* Oxalate Solution	0.0827 *N* Ceric Sulfate	Purity
	Gram	*Ml.*	*Ml.*	%
Blank	..	10.00	36.71	..
PbO_2	0.3631	10.00	1.28	96.5
PbO_2	0.2951	10.00	7.90	96.6
PbO_2	0.3198	10.00	5.54	96.4
Blank[a]	..	10.00	36.70	..
PbO_2	0.3276	10.00	4.71	96.6
PbO_2	0.3271	10.00	5.39	96.3
PbO_2	0.2718	10.00	10.17	96.6
Blank	..	10.00	36.71	..
Pb_3O_4	0.7843	10.00	11.60	90.8
Pb_3O_4	0.5929	10.00	17.75	90.7
Blank	..	10.00	36.71	..

[a] This blank is one of several which were run with approximately 0.3 gram of PbO carried through the PbO_2 procedure to show that the presence of lead produces no measurable catalytic decomposition of the oxalate.

Diehl Method. The Diehl method as modified by Topf (*18*) depends upon a measurement with thiosulfate of the iodine liberated when lead peroxide dissolves in an excess of potassium iodide acidified with acetic acid buffered with sodium acetate. The method has been adopted by the Bureau of Standards (*1*) and very specific directions have been fixed for the analysis. A comprehensive discussion of the method is given by Milbauer and Pivnicka (*11*). The difficulties with the method are said to involve an incomplete solution of the sample and the possibilities of side reactions associated with the iodine (*7*).

The authors have found that this method yields rather consistent results: 97.1, 96.9, 96.8, 96.9, 96.8, and 97.0 per cent (average value, 96.9 per cent) of lead peroxide on the same Merck's sample referred to above under the Bunsen method. The time required for complete solution of the sample approximated 30 minutes. The authors could observe (by blank determinations) no atmospheric oxidation of the potassium iodide, no volatilization of iodine, and no precipitate of lead iodide. In view of these facts they feel that the method yields accurate results, although these are about five per cent higher than those observed with the LeBlanc-Eberius modification of the Bunsen method and about 0.6 per cent higher than those obtained with a more nearly complete absorption of the chlorine.

Schaeffer Method. The Schaeffer method (*16*) involves the use of excess hydrogen peroxide acidified with nitric acid for the solution of the sample. The excess is back-titrated with permanganate. Furman and Wallace (*3*), using a potentiometric ceric sulfate end point in place of the permanganate, report satisfactory analyses of red lead by this method and, moreover, agreement with the Bunsen values. Kraeff (*5*) finds this method inferior to the Diehl-Topf; Kreshkov and Iljuchin (*6*) have attempted to measure the volume of oxygen liberated and have been criticized by LeBlanc and Eberius (*8*) because they neglected to consider the catalytic decomposition of hydrogen peroxide in contact with lead dioxide; Mellon, Reed, and Wilkins (*10*), Pamfilov and Ivanceva (*12*), and Busvold (*2*) recommend it.

The authors have attempted to use the method, following explicitly the directions given by Furman and Wallace (*3*). Evidently the procedure, although applicable to red lead or freshly precipitated lead peroxide, is of no great value in the analysis of the Merck sample referred to above. The solution time approximated 3 hours and no question can exist but that some sort of a side reaction vitiated the results observed. On the Merck sample the authors obtained lead peroxide contents of 87, 84, and 91 per cent.

Lux Method. The Lux method (*9*) depends upon the solution of the lead peroxide in an excess of oxalic acid acidified with nitric acid, a back-titration with standard permanganate determining the amount of oxalic acid consumed during solution. This method, including its modifications by Sacher (*15*) and Ipiens (*4*), has been severely criticized by Pamfilov and Ivanceva (*13*) and LeBlanc and Eberius (*7*).

The authors have found that the chief and, in their opinion, the only error of this method lies in a decomposition of the oxalate by the nitric acid. As an illustration, 10.00 ml. of sodium oxalate which were known to require 36.71 ml. of 0.0827 *N* ceric sulfate for oxidation required only 36.60 ml. of the ceric sulfate when the oxalate was diluted with 200 ml. of water, acidified with nitric acid, and titrated at 80° C. If, as is recommended in the Lux method, the oxalate and nitric acid mixture is heated on a steam cone (94° to 96° C.) for 15 minutes (in order to dissolve the lead peroxide), 10.00 ml. of the oxalate required but 36.22 ml. of ceric sulfate. Obviously, the Lux method as originally described must be modified if it is to yield accurate data.

Modification of the Lux Method

The largest source of error in the Lux method may be eliminated by use of the following procedure:

To approximately 0.33 gram of lead peroxide (0.7 gram of red lead) 10.00 ml. of standard (0.3 *N*) oxalate are added, acidified with 25 ml. of 70 to 73 per cent perchloric acid, covered with a watch glass, heated on a steam cone at 94° to 96° C. until solution is complete (the most resistant lead peroxide samples required about 40 minutes), diluted with 200 ml. of distilled water, heated to 80° C., and titrated with standard (0.08 to 0.1 *N*) ceric sulfate.

The ceric sulfate was standardized against Bureau of Standards sodium oxalate using the procedure recommended by Willard and Young (*20*) and identical normality factors were obtained using the above lead peroxide procedure without, of course, the lead peroxide sample. This correspondence indicates that there is no measurable decomposition of oxalic acid by the perchloric acid during the heating conditions adopted for the solution of the sample. The sodium oxalate solution may be standardized against the ceric sulfate potentiometrically or from a corrected visual end point (*20*), but the authors have found the electron beam sectrometer described by Smith and Sullivan (*17*) extremely sensitive, reliable, and most convenient. A platinum-tungsten electrode system was used with this instrument. The volumetric ratio of the ceric sulfate to the oxalate was 3.671 ± 0.002, whether determined by the above procedure without the lead peroxide sample or by the Willard and Young method.

During the lead peroxide analyses blank determinations were carried through identically the same routine. The data obtained on the Merck's lead peroxide sample are given in Table I.

Summary

By the use of a common sample attempts have been made to select the most reliable method for the analysis of active oxygen in lead peroxide. The Bunsen method as modified by LeBlanc and Eberius, the Schaeffer, and the Lux methods were all tested and found to be unsatisfactory.

The Lux method was modified by replacement of nitric with perchloric acid and permanganate with ceric sulfate and by observation of the end point electrometrically with the use of an electron beam sectrometer. The method gives very consistent results entirely free from side reactions.

Acknowledgment

The authors wish to express their appreciation for the valuable coöperation of G. F. Smith and N. C. Schieltz, the former in an advisory capacity and the latter for his analyses using the Bunsen method.

Literature Cited

(1) Bur. Standards, *Circ.* 90 (May 23, 1922).
(2) Busvold, *Chem.-Ztg.*, 56, 106 (1932).
(3) Furman and Wallace, *J. Am. Chem. Soc.*, 51, 1449 (1929).
(4) Ipiens, *Z. anal. Chem.*, 53, 261 (1914).
(5) Kraeff, *Verfkroniek*, 6, 294 (1933).
(6) Kreshkov and Iljuchin, *Z. anal. Chem.*, 93, 180 (1933).
(7) LeBlanc and Eberius, *Ibid.*, 89, 81 (1932).
(8) *Ibid.*, 93, 447 (1933).
(9) Lux, *Ibid.*, 19, 153 (1880).
(10) Mellon, Reed, and Wilkins, *Proc. Indiana Acad. Sci.*, 37, 255 (1937).
(11) Milbauer and Pivnicka, *Z. anal. Chem.*, 53, 345 (1914).
(12) Pamfilov and Ivanceva, *J. Gen. Chem., U. S. S. R.*, 3, 262 (1933).
(13) Pamfilov and Ivanceva, *Z. anal. Chem.*, 79, 186 (1929).
(14) *Ibid.*, 88, 23 (1932).
(15) Sacher, *Chem.-Ztg.*, 35, 731 (1911).
(16) Schaeffer, J. Ind. Eng. Chem., 8, 237 (1916).
(17) Smith and Sullivan, *J. Soc. Chem. Ind.*, 56, 104T (1937).
(18) Topf, *Z. anal. Chem.*, 26, 296 (1887).
(19) Treadwell and Hall, "Analytical Chemistry," 7th ed., Vol. 2, p. 563, London, John Wiley & Sons, 1930.
(20) Willard and Young, *J. Am. Chem. Soc.*, 50, 1322 (1928).

Received March 15, 1937.

Photoelectric Grading of White Sugars and Their Solutions by Reflectance and Transmittancy Measurements

J. C. KEANE, Bureau of Chemistry and Soils, and B. A. BRICE, Food and Drug Administration, U. S. Department of Agriculture, Washington, D. C.

THE examination of granulated sugars for the purpose of quality control includes a classification of the finished sugars for general appearance and an evaluation of the color and turbidity of the sugar solutions.

Granulated sugars are graded on appearance by visual comparison with arbitrarily selected sugars, usually under artificial daylight illumination. Both whiteness and grain size are taken into consideration by the observer, and a sugar may be graded low because of slight yellowness, grayness, or large or uneven grain size. Not only does grain size affect the coarseness of the surface structure of a sugar sample, but it also affects all attributes of the color because of varying penetration of light into the assembly of crystals. Disagreement among observers in grading sugar is due largely to the individual judgment involved in balancing yellowness against coarseness. While this method of grading is simple and rapid, it has the disadvantages of subjectivity and lack of a permanent numerical evaluation of appearance.

The need for a rapid objective method for evaluating the general appearance of granulated sugars was pointed out by Buse (*7*). After some experimentation, he concluded that reflectance measurements on sugars were not suited for this purpose. Visual measurements, using a Zeiss Pulfrich photometer and a white-lined sphere to provide diffuse illumination, were found unsatisfactory because sufficiently small distinctions in reflectance values could not be made. Substitution of a photoelectric cell, using the same type of illumination, gave higher precision but the method as used was judged to be impractical for grading purposes.

An attempt by the authors to evaluate the appearance of granulated sugars by reflectance measurements, using a single photoelectric cell and directional illumination, has already been reported (*18*). Further work, using an improved photoelectric apparatus, has shown that good correlation exists between the appearance of a sample of granulated sugar and its reflectance relative to magnesium oxide. Photoelectric reflectance measurements are therefore proposed as an objective method for evaluating the appearance of granulated sugars for industrial purposes.

A specially designed optical system in the photoelectric apparatus to be described permits measurement of the transmittancy of sugar solutions as well as measurement of reflectance of the sugar in granulated form. With this arrangement it is possible to obtain in a single instrument (1) an index for the appearance of a crystalline sugar in terms of reflectance, (2) an index for apparent color of the unfiltered sugar solution in terms of its transmittancy for green and red light, and (3) an index of turbidity of the solution in terms of its transmittancy for red light.

The solutions of all commercial granulated sugars contain coloring matter and suspended particles, the latter ranging in size from colloidal to coarse. The presence of coloring matter and turbidity in these solutions adversely affects the quality. The spectral composition of light passing through such a solution is influenced not only by selective absorption but also by selective scattering, and for this reason difficulties are encountered when one attempts to determine coloring matter and turbidity separately. This difficulty with sugar products in general has been discussed by several writers (*2, 20, 22, 27*). The first step advocated by a number of investigators in the determination of coloring matter in sugar solutions is removal of the turbidity as completely as possible by careful filtration, with specially prepared asbestos (*22*), specially purified kieselguhr (*2*), or silica gel (*28*). However, some investigators believe that such filtration may not remove the turbidity completely enough and in fact may remove some of the coloring matter. The coloring matter in these filtered sugar solutions, as well as in the more highly colored intermediate sugar liquors, is usually determined by means of a color comparator such as the Stammer, Duboscq, Campbell-Hurley (*1*), or similar instrument (*14*), or by measuring the specific absorptive index—log **t**, usually for light of wave length 560 millimicrons, with a spectrophotometer (*4, 8, 22, 24, 27, 28*) or an abridged spectrophotometer (*3, 4, 15, 19, 20, 23, 25*).

Methods for determining turbidity in sugar solutions have been discussed by Zerban, Sattler, and Lorge (*27*, *28*). The method used for a number of years in the Bureau of Chemistry and Soils, U. S. Department of Agriculture, has been that of Balch (*2*), in which the difference between the specific absorptive index of the solution with and without filtration is used to express turbidity.

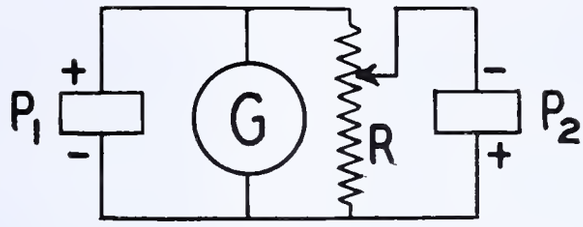

FIGURE 1. COMPENSATING PHOTOELECTRIC CIRCUIT

P_1, measuring photocell; P_2, compensating photocell; G, galvanometer; R, potentiometer-rheostat

Most of the color and turbidity determinations in sugar solutions have been made on instruments employing visual measurements. In recent years the use of photoelectric cells has made possible greater speed, precision, and objectivity of measurements. The limitations and advantages of photoelectric instruments for such purposes have been discussed by Gibson (*10*). Photoelectric instruments have been used for determining coloring matter in sugar solutions by Sandera (*23*), Holven and Gillett (*15*), Jackuschoff (*16*), Herke and Rempel (*13*), and Bruckner and Becker (*6*), and for turbidity indication by Gillett and Holven (*11*).

It is believed that the photoelectric apparatus and method proposed by the authors for determining the apparent color and turbidity in sugar solutions without recourse to filtration fulfills a need for a simple, rapid evaluation of quality for purposes of industrial control. The determination of apparent color in the unfiltered solutions is based on the fact that with increasing amounts of yellowish coloring matter the ratio of green to red transmittancy, $\mathbf{T}_g/\mathbf{T}_r$, should decrease. If the suspended matter in the solution were to scatter light nonselectively, this ratio would be independent of turbidity. The use of this ratio in this connection was suggested by its previous use as an index of chromaticity of rosin samples containing suspended dirt particles (*5*, *12*). However, in the case of sugar solutions, for which a varying proportion of the scattered light is selective, this ratio is not entirely independent of the suspended matter. For sugar solutions, then, the ratio $\mathbf{T}_g/\mathbf{T}_r$ may be considered to indicate only the apparent color and not the true color of the solution. The results so far obtained, together with the simplification gained by elimination of filtering of solutions, appear to justify its use in evaluating the color quality factor for practical purposes. The form adopted for the apparent color index is $I_c = 100(1 - \mathbf{T}_g/\mathbf{T}_r)$, since in this form $I_c = 0$ for a hypothetical sugar solution free from coloring matter and turbidity, and increases with increasing amount of coloring matter. The apparent color could, of course, be expressed simply by the difference between the specific absorptive indexes for green and red light, but since the instrument scale indicates transmittancy and since only a practical quality index for solutions of constant depth and concentration is desired, it is believed that no advantage would be gained by using the more usual logarithmic form of expression.

The turbidity index proposed is $I_t = 100(1 - \mathbf{T}_r)$, which is simply the per cent absorbency (*22*) of the unfiltered sugar solution for red light. This index is practically independent of the coloring matter in solutions of white sugars because there is virtually no light absorption in the red part of the spectrum by the small amount of coloring matter present. In this form, the turbidity index would be zero for a sugar solution free from suspended matter and having only a relatively small quantity of coloring matter present, and would increase with increasing turbidity. Reduced to the form of specific absorptive index (*22*) $(-\log \mathbf{T}_r)/bc$, where b is the depth of the solution in centimeters and c is its concentration in grams per cubic centimeter of solution, the result should approximately agree numerically with Balch's turbidity figure (*2*).

Apparatus

A diagram of the compensating photoelectric circuit used in the apparatus is shown in Figure 1.

P_1 and P_2 are photronic cells in a parallel connection with a 22-ohm mirror galvanometer, G, of sensitivity 0.36μÅ. per mm. and a 35-ohm precision-wound 12.5-cm. (5-inch) diameter Leeds & Northrup potentiometer-rheostat, R. The latter carries a uniform scale calibrated from 0 to 100. This photoelectric circuit and the conditions under which the scale indicates light transmission or reflectance by a prepared sample have been described in detail elsewhere by one of the authors (*5*). These conditions include choice of (1) suitable photocells, (2) a low resistance value for the potentiometer-rheostat, and (3) moderate illumination of the photocells.

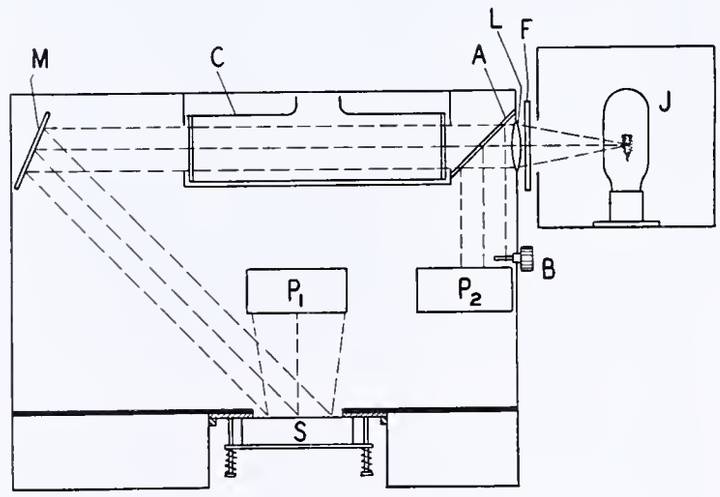

FIGURE 2. OPTICAL ARRANGEMENT OF PHOTOELECTRIC PHOTOMETER

The optical arrangement illustrated schematically in Figure 2 was designed for measuring both transmission and reflectance by a substitution method and is similar to that described by one of the writers (*5*).

A beam of light from a 50-watt projection lamp, J, passes through a color filter, F, is made parallel by a lens, L, and is divided by a clear glass plate, A, roughly 10 per cent of the light being reflected onto the "compensating" photocell, P_2, while the main beam transmitted by the plate, A, passes through a compartment containing an absorption cell, C. After reflection by a mirror, M, the collimated beam strikes the standard white reflecting surface, S, at an angle of 45°, and a cone of diffusely reflected light is received by the "measuring" photocell, P_1, placed directly above and with its sensitive surface parallel to the standard reflecting surface. A sliding shutter operated by a screw, B, provides a means of making small adjustments in the light intensity received by photocell P_2. The filter, F, cell, C, and standard white plate, S, are mounted on slides and can be withdrawn from the light beam or replaced as required. For reflectance measurements cell C is removed and either the standard white plate or a sugar sample is brought into the beam at S by moving the appropriate slide. For transmission measurements, the standard white plate is kept fixed in the beam at S, and the cell C is moved in and out of the beam as required. The lamp may be run from 110-volt alternating current lighting mains. Line voltage fluctuations produced no perceptible galvanometer fluctuations with the particular pair of photocells used. This stability (*5*) would not necessarily exist if another pair of photocells were substituted; voltage regulation may be required for pairs of photocells in some cases.

Procedure for Reflectance Measurements

The working standard of reflectance used in the apparatus was an opaque white glass plate with a finely ground surface having a reflectance of 0.856 relative to that of a freshly prepared magnesium oxide (*21*) surface, measured in place in the instrument. The reflectance of this plate was found to remain constant over a period of about 3 months when frequently washed with soap and water. When set aside and not used for 3 months, its reflectance after washing was found to have decreased by 1.2 per cent, but after slight regrinding of the surface its original reflectance was restored. If properly cared for, it is believed that such a glass plate makes a satisfactory working standard, though its reflectance should be checked occasionally.

Care in the preparation of the sugar sample for a reflectance measurement is important.

The granulated sugar is poured into a metal dish 63 mm. in diameter and 16 mm. deep, and the top surface of the sugar layer is smoothed off with a Petri dish having a flat ground bottom, using only moderate pressure and a slightly circular motion until the sugar surface is accurately flush with the edge of the metal dish. After being thus filled, the dish of sugar is inserted in the proper slide, where it is held by springs against a 56-mm. opening, ready for substitution in the light beam. The smoothing of the sugar surface must be done carefully since slight overfilling or underfilling will cause appreciable error because of the nearness of the photocell to the reflecting surface. The magnitude of this error is easily calculated. If d is the distance between the photocell surface and the sugar surface when the dish is accurately flush-filled, the error made in a reflectance determination, R, when a filling error $+\Delta d$ (overfilling) or $-\Delta d$ (underfilling) occurs is approximately $(\pm 2\Delta d/d)R$. In this apparatus d is 55 mm. and therefore if the dish is overfilled or underfilled by only 0.3 mm. the error in measuring the reflectance will be $0.011R$ or about 1 per cent of the value of R.

The reflectance of the sugar sample is measured in the apparatus as follows:

With the standard white plate in position to receive the light beam, the galvanometer is adjusted to read zero, the potentiometer-rheostat scale set to 85.6 (the reflectance of the standard white plate), the lamp turned on, and the shutter, B, moved until the galvanometer again reads zero. The slide carrying the sample is then moved so that the sugar sample replaces the standard white plate. The galvanometer deflects and the balance of the circuit is restored by adjusting the potentiometer-rheostat. The scale reading then indicates the reflectance of the sample relative to magnesium oxide.

The reproducibility of measurements on this apparatus is very satisfactory, the average deviation for a number of readings on a given prepared sample being less than ± 0.1 on the 0 to 100 scale. All reflectance values reported here are the average of 6 determinations, 3 readings on the first preparation of the sample and 3 more on refilling the dish with the same sugar sample. The results are expressed to four significant figures for the purpose of this paper, but in practice for grading sugar one reading on one filling, or preferably one reading on each of two different fillings, is sufficient, in which case only 3 significant figures should be reported. The accuracy of the reflectance measurements is of course not as high as the precision (reproducibility) of the measurements, and depends on many factors, such as the degree of elimination of specularly reflected light from the photocell, the care with which the white plate is standardized against magnesium oxide, the constancy of the reflectance of the white plate, and the care used in filling the sample dish.

If proper precautions are taken it is believed that the reflectance errors should not be greater than 1 per cent. For the purpose of the present investigation, however, obtaining reproducible results is more important than obtaining true reflectance values and, even when refilling of the sample container is resorted to, results are reproducible to ± 0.2 on the 0–100 reading scale.

Procedure for Transmittancy Measurements

Solutions were prepared for transmittancy measurements as follows:

A 150-gram sugar sample is dissolved in distilled water at room temperature and made up to 250 ml. of solution. This high concentration was selected because it is far enough below saturation to permit dissolving without use of heat and at the same time sufficiently concentrated to stabilize the suspension of particles. The minute bubbles of occluded air present in a freshly prepared solution may be removed by applying vacuum or allowing the solution to stand several hours. The solution is then transferred to a 150-mm. absorption cell having plane and parallel ends, and allowed to stand a minute to permit any newly formed air bubbles to rise to the top of the cell before placing it in the instrument. Another absorption cell, similar to but only half as long as the solution cell, is filled with distilled water from the same source as that used in making up the solutions, and serves as the reference cell for the transmittancy measurements.

A 150-mm. solution cell was chosen because of the small amount of coloring matter present in white sugar. A solvent cell approximately half this length was used for the following reasons: (1) the concentrated sugar solutions used contain only 51.2 per cent of water; (2) water of this depth appreciably absorbs red light beyond about 690 mμ, with a maximum absorption at 760 mμ (*9*); (3) the filter used when measuring the transmittancy of the solution for red light freely transmits light absorbed by the water, and the photronic cell shows appreciable response to radiation in this part of the spectrum. Thus the use of a reference cell about 75 mm. long containing distilled water compensates for selective absorption of red light by the water in the solution as well as for reflection losses at the glass surfaces of the cell, and very nearly true solution transmittancy is obtained.

Table I. Ranking of Ten Granulated Sugar Samples

Sample No.	By Visual Grading, 7 Observers (A–G) A	B	C	D	E	F	G	Av.	By Reflectance Measurements	R %
I	1	1	1	1	1	2	1	1	1	93.33
II	2	3	3	2	2	4	2	2	2	92.33
III	3	2	2	5	3	3	3	3	3	91.53
IV	9	7	7	4	8	7	4	7	4	91.18
V	6	4	4	7	5	8	5	5	5	91.15
VI	5	6	6	6	6	5	9	6	6	89.73
VII	4	5	5	3	4	1	6	4	7	89.68
VIII	10	9	10	10	10	10	7	10	8	88.50
IX	8	10	9	9	7	9	8	9	9	87.98
X	7	8	8	8	9	6	10	8	10	87.37
Correlation coefficient	0.70	0.87	0.85	0.81	0.79	0.51	0.88	0.84	..	...

In making transmittancy measurements, balancing of the photoelectric circuit is similar to that described for the reflectance measurements, except that one starts with the scale set to read 100 with both the standard white plate and the 75-mm. cell of water in position in the light beam. After the circuit is balanced, the water cell is replaced by the 150-mm. solution cell and when the circuit is rebalanced, the scale indicates the transmittancy of the solution.

The transmittancy of each unfiltered sugar solution was measured first with a blue-green filter (Corning light shade blue-green No. 428, 3.4 mm. thick) and then with a red filter (Corning traffic red No. 245). The spectral transmissions of these filters were measured and the approximate spectral centroids effective for the conditions used were calculated assuming (1) a color temperature of 2850° K. for the lamp, and (2) a spectral response curve for the photronic cell the same as given by the Weston Electrical Instrument Corporation (*26*). The calculated values were 535 mμ for the blue-green filter, 655 mμ for the red filter, and 590 mμ for the

lamp-photocell combination without a filter (as used for the reflectance measurements). These values are of course only approximate, but their inclusion here permits a more fundamental interpretation of the reflectances and transmittancies reported.

Correlation between Visual Grading and Reflectance Measurements on Granulated Sugars

Ten samples of granulated sugar were selected at random, placed in numbered sample boxes, and given to seven observers, who were requested to arrange the samples in descending order of good appearance, each according to his individual judgment. The reflectances of these samples were then measured on the photoelectric apparatus. In Table I the ten samples are arranged in order of decreasing reflectance, and the ranking of the samples by each observer is shown, together with the average of these rankings. Inspection of Table I readily suggests a correlation between the reflectance measurements and the appearance as judged visually. Correlation coefficients connecting reflectance and visual ranking were calculated (*17*) for each observer and for the average ranking by the seven observers, and are included in the table. The coefficient 0.84 for the average ranking indicates that a good correlation exists between the measured reflectances and the visual appearance of the sugar samples. With one exception the correlation coefficients for the individual observers are good or fair.

Effect of Grain Size and Coloring Matter on Reflectance of Sugars

The separate effect of grain size and coloring matter on the reflectance of sugars was studied by screening 24 samples of sugar through a set of sieves having Bureau of Standards sieve numbers 20, 30, 40, 50, and 70 with sieve openings 0.84, 0.59, 0.42, 0.30, and 0.21 mm., respectively. The average grain sizes of the various portions of the screened sugars were assumed to be 0.71 mm. for the sugar passing through No. 20 and retained on No. 30; 0.50 mm. for sugar passing through No. 30 and retained on No. 40; 0.36 mm. for that passing through No. 40 and retained on No. 50; 0.25 mm. for that passing through No. 50 and retained on No. 70; and 0.15 mm. for that passing through No. 70. The reflectances were measured for the various screened portions and are recorded in Table II. Transmittancy measurements were made in the photoelectric apparatus on solutions of the original unscreened sugars. The transmittancies for green and red light and the values for the apparent color index $I_c = 100(1 - \mathbf{T}_g/\mathbf{T}_r)$ are also given in Table II. The apparent color was assumed to be the same for all the screened portions of a given sugar.

Comparison of readings for individual samples of Table II shows that, in general, reflectance diminishes as grain size increases. It is also apparent from the data in Table II, especially that included in the last three columns, that the reflectance of a sugar decreases as the apparent color index of the sugar in solution increases. The data indicate definitely that the presence of coloring matter affects the reflectance, and hence the appearance, of a coarse-grained sugar more than that of a fine-grained sugar. For example, comparing samples 21 (color index 8.8) and 59 (color index 23.8), the larger amount of "color" in the latter sample is responsible for a per cent reflectance lower by 5.12 for the 0.71-mm. grain size but only 2.88 lower for the 0.36-mm. grain size.

A few irregularities or inconsistencies appear in Table II. For instance, in some cases the reflectance of the fraction of smallest grain size (column headed 0.15 mm.) is not as high as might be expected from examination of the data on the fractions of larger grain size. This is probably due to accumulation of small particles of foreign matter in the fraction of smallest grain size during the screening process, which tends to lower the reflectance. Another type of inconsistency appears for sample 56, for which a high color index and high reflectance both occur. The solution of this sugar had a pronounced milky appearance not shown by the other solutions, and it was concluded that this solution contained an unusually large proportion of very small scattering particles and hence exceptional selectivity of scattering. In this particular case the apparent color index is probably not even an approximate indication of the true coloring matter in solution, since the high reflectances obtained would place it near the top of the table with sugars having an apparent color of about 6. However, a solution of this nature is only rarely encountered, and the consistency of the data for the rest of the samples of Table II indicates that the apparent color index used may be a suitable practical indication of color in unfiltered sugar solutions.

Table II. Transmittancy, Apparent Color, and Reflectance of Various Granulated Sugars

Sample No.	Unfiltered Solutions of Sugars before Screening: Transmittancy Green light $\mathbf{T}_g$	Red light $\mathbf{T}_r$	Apparent color index[a] I_c	Screened Fractions of Granulated Sugars[b]: 0.15 %	0.25 %	0.36 %	0.50 %	0.71 %
24	82.7	86.2	4.0	91.90	91.39	90.40	89.88	...
2	82.5	86.5	4.6	...	...	90.95	89.25	...
29	77.8	81.7	4.7	92.38	91.85	90.90	88.80	...
33	81.8	86.0	4.8	92.92	92.13	91.07	89.42	...
26	77.9	82.8	5.9	92.78	91.77	90.42	88.80	...
28	71.6	76.6	6.5	91.76	91.33	90.18	88.62	...
37	72.7	78.2	7.0	92.65	91.30	89.82	88.35	...
25	72.9	78.7	7.3	91.60	91.40	90.42	89.02	...
27	77.3	83.9	7.9	92.18	90.72	90.03	88.42	...
31	76.7	83.4	8.1	92.02	91.07	90.07	88.16	...
21	73.0	80.0	8.8	...	...	90.50	89.36	87.04
34	66.7	73.5	9.2	91.52	91.13	90.42	88.90	...
22	63.2	70.6	10.5	...	90.35	89.45	87.87	...
38	68.3	76.7	10.9	90.60	90.12	89.37	87.65	...
8	62.5	70.3	11.1	...	...	89.41	87.50	85.50
5	51.8	58.3	11.1	...	...	89.37	88.22	85.02
36	64.0	72.2	11.3	91.43	90.25	88.82	87.02	...
23	68.7	77.9	11.8	...	90.28	89.43	87.88	...
32	68.3	77.5	11.9	91.17	90.62	89.18	87.53	...
35	62.9	71.6	12.2	91.53	89.72	88.15	86.32	...
60	46.3	57.8	20.0	90.28	89.80	88.85	86.44	...
30	51.8	65.6	21.0	90.59	89.67	88.86	85.70	...
59	37.1	48.7	23.8	...	...	87.62	85.47	81.92
56	25.8	40.0	35.5	92.58	91.92	91.38	89.78	...

[a] $I_c = 100\ (1 - \mathbf{T}_g/\mathbf{T}_r)$.
[b] Reflectance of the fractions of graduated grain size, average diameter in mm.

Using the data of Table II (supplemented by data shown later in Table III) an attempt was made to formulate a relationship between the reflectance, R, of a sugar, its grain size, g, and the apparent color, I_c, of its solution. If sufficient data were available, a plot of reflectance against grain size would be expected to yield a family of curves, one curve for each value of apparent color. Sufficient data for accurate evaluation of these curves were not available, but an approximate expression was obtained by grouping all sugar samples of Tables II and III into three groups: (1) samples having $I_c < 6.0$ (average value 4.6), (2) samples having I_c between 6.0 and 11.5 (average 9.3), and (3) samples having $I_c > 11.5$ (average 13.2). Reflectance was then plotted against grain size (excluding as unreliable the data in Table II for the 0.15-mm. grain size) for the three color groups. Though the points in each group scattered considerably, three parallel straight lines, one for each group, appeared best to represent the trend. The approximate equation for the family of curves was found to be

$$R = -14.3\ g + R_0 \qquad (1)$$

where R is the per cent reflectance of the sugar, g its grain size in millimeters, and R_0 the reflectance for zero grain size, which is different for different amounts of color. R_0 was

TABLE III. PHOTOELECTRIC ANALYSIS TO DETERMINE QUALITY OF COMMERCIAL GRANULATED SUGARS

Sample No.	Average Grain Size	Apparent Color Index[a] I_c	Turbidity Index[b] I_t	Reflectance Observed	Reflectance Calculated[c]	Reflectance Difference
	Mm.			%	%	%
1	0.300	15.8	36.3	90.03	89.48	+0.55
2	0.308	4.6	13.5	91.54	91.67	−0.13
3	0.293	9.5	21.4	90.37	90.88	−0.51
4	0.310	7.1	14.3	90.82	91.13	−0.31
5	0.425	11.1	41.7	88.35	88.63	−0.28
6	0.338	10.9	22.5	90.38	89.94	+0.44
7	0.343	15.4	28.6	88.54	88.95	−0.41
8	0.446	11.1	29.7	87.80	88.36	−0.56
9	0.291	13.4	27.2	91.70	90.10	+1.60
10	0.391	7.8	18.1	90.55	89.72	+0.83
11	0.369	11.5	42.5	90.72	89.34	+1.38
12	0.391	8.6	20.0	89.60	89.66	−0.06
13	0.344	11.7	30.1	90.72	89.70	+1.02
14	0.312	4.2	11.4	93.45	91.59	+1.86
15	0.311	14.1	34.8	89.55	89.67	−0.12
16	0.301	3.7	11.1	92.45	91.96	+0.49
17	0.383	8.5	35.8	88.93	89.79	−0.86
18	0.312	10.0	27.2	91.37	90.50	+0.87
19	0.358	14.0	48.2	88.87	89.02	−0.15
20	0.307	15.0	21.1	89.25	89.50	−0.25
21	0.445	8.8	20.0	89.72	88.95	+0.77
22	0.312	10.5	29.4	90.80	90.40	+0.40
23	0.335	11.8	22.1	89.83	89.80	+0.03
24	0.338	4.0	13.8	91.30	91.37	−0.07
25	0.352	7.3	21.3	91.28	90.49	+0.79
26	0.326	5.9	17.2	91.27	91.14	+0.13
27	0.318	7.9	16.1	90.96	90.84	+0.12
28	0.301	6.5	23.4	91.18	91.38	−0.20
29	0.339	4.7	18.3	91.62	91.20	+0.42
30	0.293	21.0	34.4	89.60	88.50	+1.10
31	0.338	8.1	16.6	90.75	90.52	+0.23
32	0.368	11.9	22.5	90.00	89.31	+0.69
33	0.316	4.8	14.0	91.85	91.51	+0.34
34	0.330	9.2	26.2	91.12	90.40	+0.72
35	0.329	12.2	28.4	89.73	89.81	−0.08
36	0.322	11.3	27.8	89.85	90.09	−0.24
37	0.317	7.0	21.8	91.17	91.05	+0.12
38	0.366	10.9	23.3	89.23	89.54	−0.31
39	0.342	4.8	18.4	90.57	91.14	−0.57
40	0.377	2.4	11.2	91.25	91.14	+0.11
41	0.367	10.8	24.8	90.02	89.55	+0.47
42	0.282	12.7	24.2	90.70	90.37	+0.33
43	0.384	15.7	29.9	88.82	88.87	−0.05
44	0.319	3.1	11.7	93.13	91.82	+1.31
45	0.312	5.3	19.7	91.47	91.57	−0.10
46	0.337	4.1	13.4	92.02	91.36	+0.76
47	0.320	25.8	45.6	91.25	87.13	+4.12
48	0.366	10.8	14.6	89.28	89.57	−0.29
49	0.369	11.7	35.7	88.52	89.34	−0.82
50	0.327	7.0	16.7	91.00	90.90	+0.10
51	0.335	15.0	22.1	90.42	89.15	+1.27
52	0.366	10.0	18.1	90.32	89.73	+0.59
53	0.309	7.3	14.9	91.68	91.09	+0.59
54	0.369	3.6	11.7	90.68	91.01	−0.33
55	0.312	4.7	16.1	91.68	91.59	+0.09
56	0.327	35.5	60.0	92.48	85.03	+7.37
57	0.348	6.6	30.4	89.32	90.68	−1.36
58	0.319	6.9	14.1	90.53	91.04	−0.51
59	0.442	23.8	51.3	85.73	85.81	−0.08
60	0.327	20.0	42.2	89.85	88.22	+1.63
Av.	0.341	10.3	24.6	90.45	90.03	+0.42

[a] $I_c = 100\,(1 - T_g/T_r)$. [b] $I_t = 100\,(1 - T_r)$. [c] From equation $R = -0.206\,I_c - 14.3g + 97.02$.

evaluated by plotting the intercepts (reflectance extrapolated to zero grain size) of the three straight lines against the average value of I_c for each of the three groups. This gave the following expression relating R_0 and I_c:

$$R_0 = -0.206\,I_c + 97.02 \qquad (2)$$

Combining Equations 1 and 2 the complete relation is

$$R = -0.206\,I_c - 14.3g + 97.02 \qquad (3)$$

This expression predicts a maximum reflectance of about 97 per cent for a sugar free from coloring matter and having very small grain size. However, this limiting value is apparently somewhat low, as a finely pulverized sample of a highly purified sugar gave a measured reflectance of 97.3 per cent.

In 60 typical unscreened sugar samples examined (Table III), the average grain size ranged from 0.28 to 0.45 mm., and the apparent color ranged from about 2 to 24. By means of Equation 3 it is seen that for the extremes of grain size in this lot of typical samples the reflectance value is affected approximately 2.2 per cent, while for the extremes of apparent color it is affected twice as much, 4.4 per cent. The worst possible sugar in a group with these extremes would differ in reflectance from the best possible sugar by only 6.6 per cent. The magnitude of these changes in reflectance values produced by differences in grain size and differences in amount of coloring matter could be increased by using an effective wave length of light smaller than the mean wave length 590 mμ estimated for the present measurements.

Quality Analysis on Typical Sugars

In order to illustrate application of the photoelectric photometer to routine analysis of general quality of sugars, measurement of reflectance and determination of apparent color index and turbidity index were made on 60 samples of commercial granulated sugar. These values are given in Table III. The average grain size of each sample was calculated by use of grain-size distribution data available from previous screening and weighing of these sugars. The observed reflectance of each sample is compared with the value calculated from Equation 3.

The size of the differences in the last column indicates that Equation 3 expresses the relation between reflectance, grain size, and apparent color fairly satisfactorily. The average value of the observed minus the calculated reflectances for the 60 samples is 0.42 per cent. There are, however, some large discrepancies, notably for samples 47 and 56. (The latter sample was discussed in connection with Table II.) The turbidity index for these solutions is large, but, while no larger than, for example, samples 19 and 59, these solutions showed visually a milky appearance not possessed by the other samples of high turbidity. Solutions of this type, though not frequently encountered, will show a high apparent color index which may not be even an approximate indication of the true coloring matter in the solutions. Some difference between the apparent color and true color may exist for all the results reported, since the differences shown in Table III in many cases are larger than the precision of measurements of both reflectance and transmittancy. However, the error made in estimating color in the solutions by this method is believed to be not serious enough (except for occasional samples such as 47 and 56) to outweigh the advantage gained by eliminating filtration of solutions. It is possible that the color index would be more reliable if applied only on filtered solutions, but if this were done doubt would remain because of the possibility of loss of color in the filtration process. Some evidence for the reliability of the apparent color index, as determined on unfiltered solutions, for indicating true color is shown in the consistency of results in Table II (except for sample 56).

Further evidence is gained from Table III in the fact that the difference in observed and calculated reflectances averaged for the group of samples having high turbidity does not differ significantly from the differences averaged for the group of samples having low turbidity; the same is true for the group of samples having high apparent color as compared with the samples having low apparent color (omitting samples 47 and 56).

As mentioned previously, the specific absorptive index of the unfiltered solutions for red light should agree approximately with turbidity figures measured by Balch's method (*2*). In order to verify this, values of $(-\log T_r)/bc$ were

calculated from the red transmittancies T_r measured on the photoelectric photometer for 10 unfiltered sugar solutions and these were compared with the specific absorptive index differences between the unfiltered and filtered solutions of the same samples as measured on a photoelectric spectrophotometer. Fair agreement for the 10 samples was obtained, the average numerical difference between the two methods being ±0.005 at 560 mμ and ±0.003 at 650 mμ. A similar comparison of results for the 60 samples of Table III with results obtained previously by another observer on a visual spectrophotometer at 560 mμ by Balch's method showed agreement to ±0.004.

The possibility of obtaining a color index for sugar by reflectance measurements on the sugar in granulated form was considered. Table IV shows the reflectances of three screened sugars, measured on the photoelectric photometer for green and red light. R_g is the reflectance measured with the blue-green filter (spectral centroid 535 mμ), R_r the reflectance measured with the red filter (spectral centroid 655 mμ), and the quantity $100(1 - R_g/R_r)$ is a convenient color index. The grain size of these three screened samples of sugar was 0.36 mm. and the apparent color as determined from transmittancy measurements (see Table II) on unfiltered solutions was low for sample 24 and high for sample 30. Sample 56 is the one which showed discrepancies in the results of Tables II and III. The reflectance color index of Table IV appears to place this sample among sugars of low color where it apparently belongs.

Table IV. Reflectance Measurements for Green and Red Light

Sample No.	R_g (535 mμ)	R_r (655 mμ)	$100(1 - R_g/R_r)$
30	86.3	90.2	4.3
56	90.1	92.6	2.7
24	89.2	91.4	2.4

While a measurement of the reflectance of granulated sugar for green (or blue) light and red light may provide a reliable index of the coloring matter present in sugars of equal grain size, such a method is considered not practical because it would require screening of all samples. Since grain size greatly affects the color of granulated sugars, the use of a reflectance method in obtaining an index of coloring matter for unscreened sugars is judged to be not as reliable as the method described for determining the apparent color using unfiltered solutions.

Certain possible improvements both in apparatus and method might be suggested at this point for further work.

1. Some advantage should be gained by using a "visibility" correcting filter with the photocell for the reflectance measurements. Results would then agree more nearly with data obtained by visual measurements or with other makes of photocells also having correcting filters, and would have a less arbitrary numerical value. Reflectances measured using such a filter would, however, be only slightly lower than those reported here and the conclusions reached would be the same.

2. Because of slight differences in spectral sensitivity for individual photocells and difficulty in reproducing identical color filters, readings obtained on a given series of samples on several similar instruments will not agree exactly, especially when using the blue-green filter. By compensating spectral response differences by thickness adjustment of the blue-green filters, it would be possible practically to eliminate such differences in readings. However, an easier way of bringing such results into agreement would be to use monochromatic light. For this purpose, use of sources such as mercury, sodium, and cadmium arcs, with suitable filters, might be practicable with the present apparatus. The measurements would then be fundamental, and would be free from many sources of error present when using tungsten lamp illumination with arbitrary filters.

Summary

The reflectance of white sugars in granulated form, measured on a photoelectric apparatus using directional illumination, has been shown to be a practical method of evaluating the "appearance" of sugars. The variation of reflectance of such sugars with grain size and amount of coloring matter has been studied. A simple method of determining the "apparent color" and turbidity of sugar solutions by abridged spectrophotometry, without necessity for filtration of the solutions, is proposed for the purpose of practical quality evaluation. While the present investigation has been limited to white granulated sugars, it is believed that the apparatus and method might be used for measuring the reflectance of other sugars and for determining the "apparent color" and turbidity of other sugar products using less depth of solution and a suitable concentration.

Acknowledgment

The authors wish to acknowledge with appreciation the assistance of John R. Hoffman for shop work in construction of the apparatus.

Literature Cited

(1) Ambler, J. A., and Byall, S., Ind. Eng. Chem., Anal. Ed., **3**, 135 (1931).
(2) Balch, R. T., *Ibid.*, **3**, 124 (1931).
(3) Bates, *Intern. Sugar J.*, **22**, 654 (1920).
(4) Brewster, J. F., *J. Research Natl. Bur. Standards*, **16**, 349 (1936).
(5) Brice, B. A., *Rev. Sci. Instruments* 7 (July, 1937); *J. Optical Soc. Am.*, **24**, 162 (1934).
(6) Bruckner and Becker, *Deut. Zuckerind.*, **56**, 692 (1934).
(7) Buse, H., *Centr. Zuckerind.*, **41**, 290 (1933).
(8) Dawson, L. E., Beet Sugar Report, VI, Carbohydrate Division, Bureau of Chemistry and Soils, U. S. Dept. Agriculture, 1927.
(9) Ganz, E., *Ann. Physik*, **26**, 331 (1936).
(10) Gibson, K. S., Natl. Bur. Standards, *Letter Circ.* **LC-473** (July 9, 1936); *Instruments*, **9**, 309 (1936).
(11) Gillett, T. R., and Holven, A. L., Ind. Eng. Chem., **28**, 391 (1936).
(12) Hardy, J. D., and Pfund, A. H., unpublished work.
(13) Herke, T., and Rempel, N., *Deut. Zuckerind.*, **59**, 379, 397 (1934).
(14) Heyden, E. v., *Ibid.*, **56**, 627 (1934).
(15) Holven, A. L., and Gillett, T. R., *Facts About Sugar*, **30**, 169 (1935).
(16) Jackuschoff, P., *Deut. Zuckerind.*, **56**, 859, 882 (1933).
(17) Judd, D. B., *Paper Trade J.*, **103**, No. 8, 38 (1936).
(18) Keane, J. C., and Brice, B. A., *Facts About Sugar*, **30**, 383 (1935).
(19) Landt, E., *Z. Ver. deut. Zucker-Ind.*, **84**, 954 (1934).
(20) Landt, E., and Witte, H., *Ibid.*, **84**, 450 (1934).
(21) Natl. Bur. Standards, *Letter Circ.* **LC-395** (Jan. 20, 1936).
(22) Peters, H. H., and Phelps, F. P., *Bur. Standards Tech. Paper* **338** (1927).
(23) Sandera, K., *Z. Zuckerind. cechoslovak. Rep.*, **55**, 33 (1930).
(24) Spengler, O., and Landt, E., *Z. Ver. deut. Zucker-Ind.*, **77**, 429 (1927); **81**, 13 (1931).
(25) *Ibid.*, **83**, 223 (1933).
(26) Weston Electrical Instrument Corp., *Tech. Bull.* (Photronic Cells).
(27) Zerban, F. W., and Sattler, L., Ind. Eng. Chem., Anal. Ed., **3**, 226 (1931); **8**, 168 (1936).
(28) Zerban, F. W., Sattler, L., and Lorge, I., *Ibid.*, **6**, 178 (1934); **7**, 157 (1935).

Received March 31, 1937. Presented in part before the Division of Sugar Chemistry at the 90th Meeting of the American Chemical Society, San Francisco, Calif., August 18 to 24, 1935. Contribution No. 136 from the Carbohydrate Research Division, Bureau of Chemistry and Soils, U. S. Department of Agriculture.

Direct Determination of Low Vapor Pressures

K. C. D. HICKMAN, J. C. HECKER, AND N. D. EMBREE
Eastman Kodak Co., Rochester, N. Y.

THE boiling points under reduced pressure of various phlegmatic liquids have been determined by a number of methods during the past 7 years. The first measurements, made in 1930, on butyl phthalate in an apparatus of complicated design (*4*), were reliable over the limited range of 1.0 to 0.1 mm., but concordant readings were not obtained at lower pressures. The next measurements were made 4 years later in the apparatus shown in Figures 1, 2, and 3, which extended the readings to 0.03 mm.

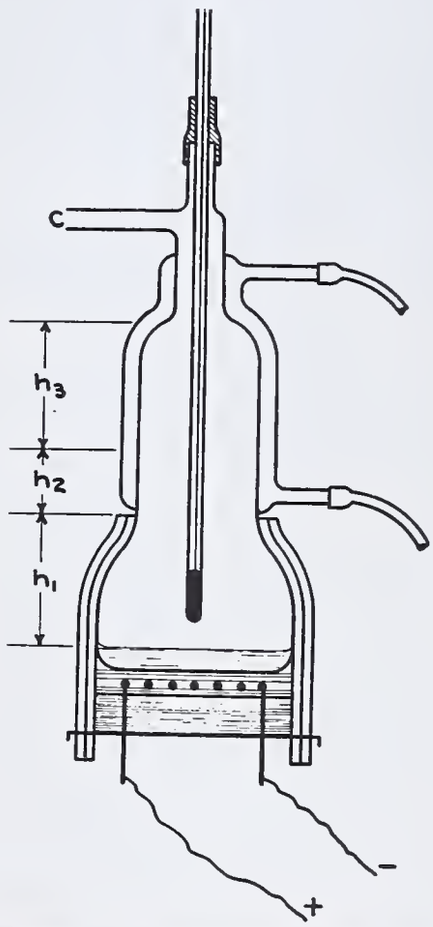

FIGURE 1. TENSIMETER-HYPSOMETER

In 1935 the ultimate vacuums producible at 20° C. by various phthalic acid esters (*3*) when boiled in condensation pumps were measured with the ionization gage (*2*). The earlier boiling points of butyl phthalate had been plotted on logarithmic paper against the inverse of the absolute temperature, in the usual manner, and, when the readings of the ionization gage were incorporated, it was found that an extrapolation of the earlier values met those from the ionization gage if a slight curvature (*3*) was introduced. Recently the apparatus shown in Figure 4 has been constructed, which provides direct readings of vapor pressure to 10^{-3} mm., possibly to 10^{-4} mm. These readings have been found to fall very nearly on the line connecting the early data with those from the ionization gage. The two direct methods for determining vapor pressure in the intermediate range—that is, between 5 and 10^{-4} mm.—are described below.

The equilibrium pressure of a gas may be assessed in terms of the random motion of its molecules. When vapor passes from the hot surface of a liquid to the cool surface of a condenser, the molecules possess an impressed velocity towards the condenser which detracts from the random velocities. At high pressures, the effect of the forward motion of the vapor is infinitesimal and the temperature of a thermometer immersed in the stream of saturated vapor measures correctly the condensation temperature of the vapor. If the pressure is lowered, the forward velocity becomes comparable with the random velocity, and the thermometer records less accurately the condensation temperature of the saturated vapor. At low pressures (*1*, *6*), the resistance of the tube connecting boiler and condenser produces a continuous change in pressure throughout the length, so that the orifices connecting the two regions must be large. At very low pressures, residual uncondensable gas (generally air) diffuses through the large orifice against the vapor and vitiates further the thermometer readings.

Apparatus

The tensimeter-hypsometers illustrated in Figures 1 and 3 were constructed so that the vapors pass the thermometer at low velocity and suffer the minimum obstruction. Most of the experiments have been done with the simpler form, having no vacuum jacket.

The tensimeter consists of a short, wide boiler connected with a water-jacketed condenser. The boiler is heavily insulated with felt and has fastened underneath a light-weight heating element protected by a few pieces of asbestos paper. Electricity

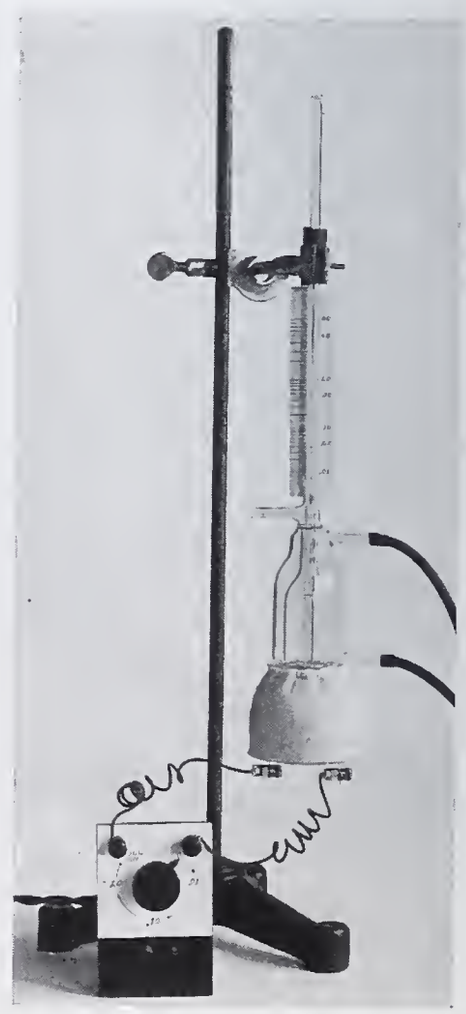

FIGURE 2. PHOTOGRAPH OF APPARATUS

s supplied through a variable resistance and a meter. The iquid to be tested is boiled with various pressures of residual air n the apparatus. The pressures, which may range from 0.01 o 0.10 mm., are conveniently measured with an oil manometer 5) attached directly to the tensimeter.

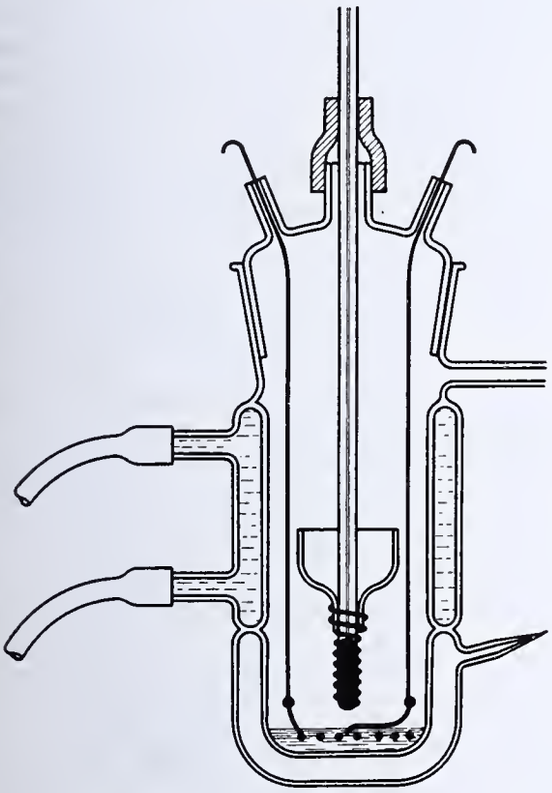

FIGURE 3. TENSIMETER-HYPSOMETER

At each steady pressure, the heat input is increased slowly, nd the temperature recorded by the thermometer is plotted gainst the input. At pressures above 0.05 mm., the temerature remains constant over a wide variation of input. This constant temperature is regarded as the boiling point f the substance at the prevailing pressure. At pressures elow 0.05, the thermometer assumes no steady state, thus lemonstrating that substances have no fixed boiling points nder high vacuum.

The tensimeter is not reliable for ressures above 5 mm. because the apor is evolved, in a superheated conition, from a distilland which bumps nd splashes onto the thermometer. The readings between 0.03 and 4 mm. re concordant and tally with those ound by other means. The vapor presures of butyl phthalate recorded with his apparatus for various inputs of eating current are shown in Figure 5. The horizontal lines show the variation f temperature with heat input at contant pressure. The vertical lines, *D* nd *E*, show the limits of heat input ermissible for each pressure. Line *C* hows the optimum heat input to hich the tensimeter should be adusted for final readings.

If the heat input is maintained at a onstant value and the pressure of inert as in the apparatus is raised, the thernometer adjusts itself to the new boilng point in a few seconds. When, owever, the pressure is lowered, many inutes are required before the thermometer assumes a steady lower temperature. The downward lag has been diminished by the construction shown in Figure 3. Here the heating coil is immersed in the operating liquid and a cup is placed on the thermometer so that on the occasions when the pressure is being lowered and a sudden rush of lower temperature vapor rises in the tensimeter, condensate trickles back over the thermometer, cooling it rapidly to the new temperature. This modified apparatus responds sufficiently quickly to be used as a hypsometer or secondary manometer. The sensitiveness of the scale remains constant throughout its useful range, which is in happy contrast to the scale of an oil manometer which becomes increasingly difficult to read at low pressures.

The hypsometer fails to work at low pressures because of interdiffusion between vapor and the residual gas, and because the random velocity is small compared with the forward velocity of the vapor molecules. Both defects could be cured by placing a flexible diaphragm across the junction between the boiler and condenser. Readings of the thermometer would correspond to the pressure above the diaphragm when this was accurately balanced by the pressure of vapor below. The flexible diaphragm is impracticable, but a substitute has been evolved, as in Figure 4, which operates satisfactorily.

Here the diaphragm is replaced by a disk forming the end of a long, light-weight pendulum, the disk swinging to close the orifice of the boiler, *A*. The substance is placed in the boiler and the assembly is immersed in a bath of oil. The bath is brought to various temperatures and is maintained constant by an electric heater, stirrer, etc., in the usual manner. The large side tube, *B*, is connected directly to a condensation pump, which is in turn connected to a mechanical oil pump. The tensimeter, condensation pump, and pipe line can be rotated around the axis of the side tube, *B*, by the gear wheels, *C*, which are carried by suitable supports. A pointer attached to the tensimeter records the angular deflection on a scale, *D*. The annulus, *E*, collects condensate from the upper parts of the tensimeter and returns it by a narrow tube to the boiler, *A*. The substance is placed in the tensimeter and a vacuum of 10^{-4} mm., as recorded by the Pirani gage, *F*, attached to *B*, is produced. The apparatus is tilted so that the pendulum just closes the orifice of the boiler. The temperature of the oil bath is raised, and presently the vapor from *A* blows the pendulum bob away from the orifice. The tensimeter is twisted until the pendulum again just closes the orifice. By comparing the position at low temperature with that at high, the deflection, produced by the pressure of the vapor when no vapor is flowing, is readily deducible.

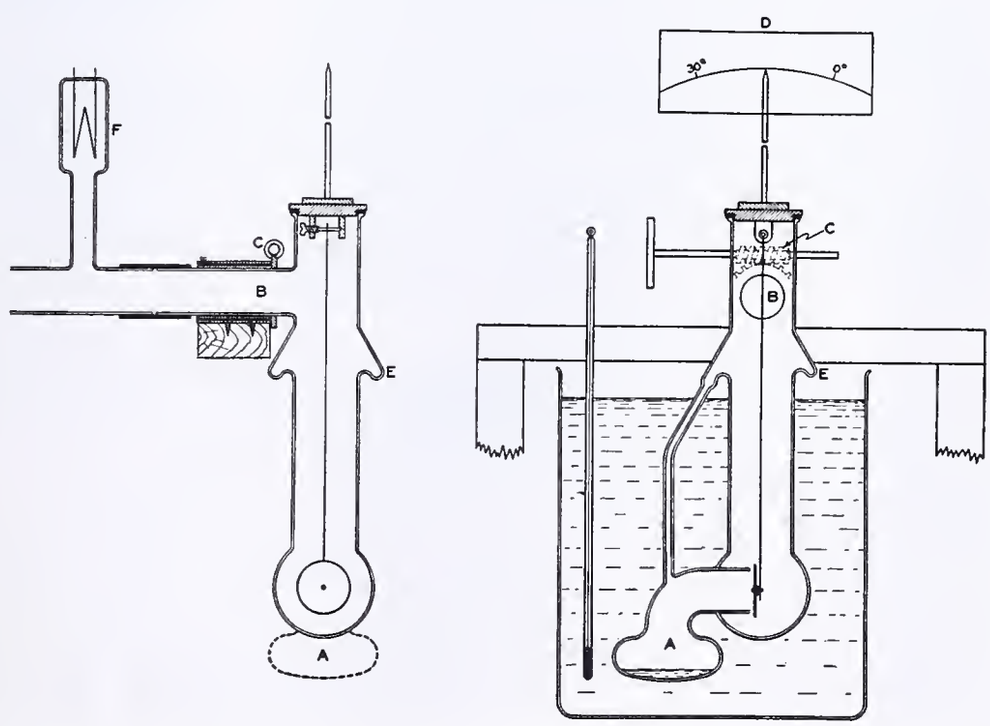

FIGURE 4. DIAGRAM OF APPARATUS FOR DIRECT DETERMINATION OF VAPOR PRESSURE

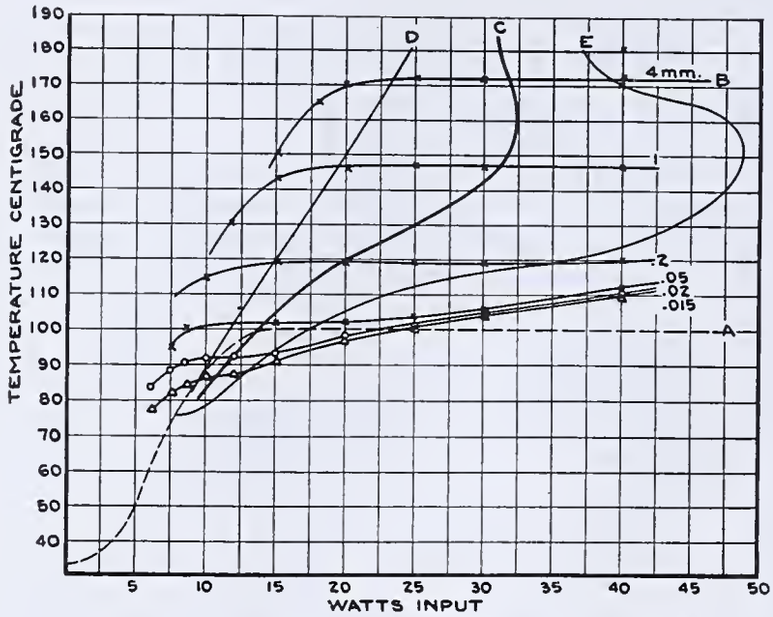

FIGURE 5. VAPOR PRESSURES OF BUTYL PHTHALATE

It is useful to allow vapor to stream by the open pendulum for some time before taking readings, in order that the material may become completely degassed.

The substance supplying the vapor is never entirely hermetically sealed in the boiler; there is always a slight leakage around the pendulum end through the tube by which the condensate returns. This tube can be closed with an iron ball and the pressures can be read with the tube closed or open and the temperatures varying in ascending or descending order. (A steel ball from a ball bearing can be placed in the annulus before sealing the apparatus. The ball is moved into or away from the tube by means of an external magnet.) The data recorded for each of the four variations prove to be the same within the limits of measurement, indicating that true equilibrium conditions obtain even with the open tube. It has been the authors' experience that, whenever measurements of low vapor pressures are made on compound substances hermetically sealed in measuring apparatus, a spurious pressure, which vitiates the lower readings, always develops after moderate exposure to heat. The devices described here are not open to this form of error.

Three factors are required to compute the pressure of vapor in the pendulum tensimeter: the area of the orifice, the effective weight of the diaphragm, and the angular deflection. The length of the pendulum does not enter into the calculation, but is significant because added length increases the sensitivity. The effective weight of the pendulum is measured by supporting the suspension end horizontally on its fulcrum outside a balance and allowing the diaphragm to rest by its center point on the balance pan.

For the apparatus used in this work, A represents the area of the orifice, 8.553 sq. cm., and W represents the effective weight of the pendulum, 2.405 grams. The force in grams exerted by the vapor on the pendulum, f, is given by:

$$\begin{aligned} f &= A \times \text{pressure (in grams per sq. cm.)} \\ &= A \times 0.00136 \text{ pressure (in microns)} \\ &= 0.01163P \end{aligned}$$

P is the pressure in microns. θ, the angle through which the apparatus is turned so that the pendulum may be in equilibrium, is given by

$$\sin\theta = \frac{F}{W} = \frac{0.01163P}{2.405}$$

or

$$P = 206.3 \sin\theta$$

Some values of θ for vapor pressures within the range of the authors' apparatus are as follows:

θ	0	16′40″	1°	2°47′	10°	29°1′
P_μ	0	1	3.78	0	37.6	100

The sensitivity of the apparatus for the lowest pressure is about 6′, which includes the uncertainty both of observing the closure between pendulum and orifice and of reading the pointer on the scale. A pressure of 3 microns can be read with an individual uncertainty of ±10 per cent, but the error for the average of a number of readings is less than 5 per cent. The sensitivity and, hence, the lower limit of measurement could be extended tenfold with ease. The improvements would include lengthening and lightening the pendulum, observing the closure telescopically, and making the angular reading with a vernier. Also, the area of the orifice could be doubled without making the apparatus unwieldy. These improvements have not yet been made because there are other systematic errors which are less open to control. Undoubtedly there is an "edge effect" because the walls of the orifice are not indefinitely thin and the pendulum overlaps the outer edge. At low pressures there is probably a greater thrust than that calculated, owing to spread of the vapor at the edge of the orifice. This same spread may introduce a Bernoulli suction effect at higher pressures. Using a diaphragm that slides within the orifice would eliminate these errors, but would introduce others. The refinements must await such investigation as future experience warrants.

The vapor pressures of various substances have been determined, and the pressure-temperature curves of a few are shown in Figure 6.

The points on the curve for 2-ethylhexyl phthalate (octoil) show poor alignment because the measurements were done in a rapid

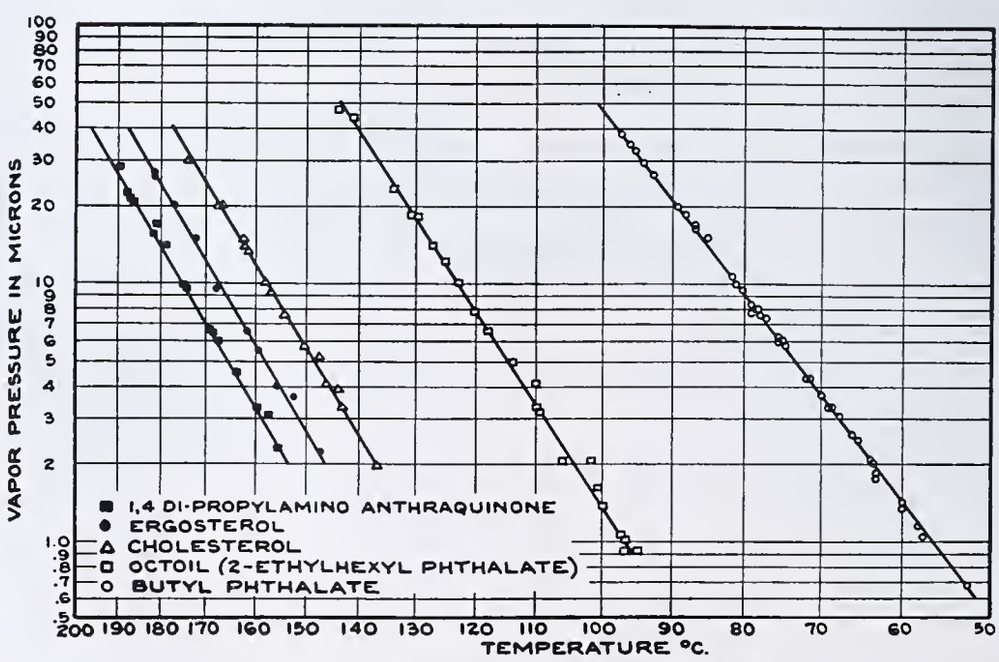

FIGURE 6. PRESSURE-TEMPERATURE CURVES

and preliminary manner, insufficient time being allowed for the attainment of equilibrium at each temperature.

Cholesterol (m. p. 148.5° C.), ergosterol (m. p. 160° C.), and 1,4-dipropylaminoanthraquinone (m. p. 155° C.) were solids at the temperatures of the cooler parts of the apparatus. Time for degassing and attainment of equilibrium was necessarily cut short, since the portion of substance which vaporized could not be returned to the boiler.

A wait of at least 5 minutes at each temperature was allowed before readings were taken of the vapor pressure of butyl phthalate. The consistency of the measurements in this case shows that equilibrium had been reached satisfactorily.

The straight lines drawn through the points representing the logarithm of the vapor pressure plotted against $1/T$ in Figure 6 may be expressed mathematically by

$$\log P = -\frac{A}{T} + B$$

If the heats of vaporization of the substances examined are assumed to be constant in the ranges of temperatures studied, then, by the familiar equation,

$$\log P = -\frac{\Delta H}{2.3RT} + \text{constant}$$

The heats of vaporization in calories per mole for these substances are equal to $2.3R$ times A. The constants A and B and the heats of vaporization are found to be as follows:

	A	B	ΔH
Butyl phthalate	4680	14.215	21,400
Octoil	5590	15.116	25,600
Cholesterol	6000	14.931	27,400
Ergosterol	6200	15.072	28,400
1,4-Dipropylaminoanthraquinone	6180	14.784	28,300

Summary

Two methods have been described for determining the vapor pressures of substances over the range 0.001 to 4.0 mm. The vapor pressures from 1 to 50 microns of mercury have been determined for two vacuum pump fluids, two sterols, and a dye.

Literature Cited

(1) Dushman, S., "High Vacuum," Schenectady, N. Y., General Electric Review Press, 1922.
(2) Dushman, S., and Found, C. G., *Phys. Rev.*, **17**, 7 (1921).
(3) Hickman, K. C. D., *J. Franklin Inst.*, **221**, 215, 383 (1936).
(4) Hickman, K. C. D., *J. Phys. Chem.*, **34**, 627 (1930).
(5) Hickman, K. C. D., *Rev. Sci. Instruments*, **5**, 161 (1934).
(6) Hickman, K. C. D., and Weyerts, W. J., *J. Am. Chem. Soc.*, **52**, 4714 (1930).

Received April 12, 1937. Communication No. 619 from the Kodak Research Laboratories.

The Colorimetric Method for Soft Resins of Hops

D. E. BULLIS, Oregon Agricultural Experiment Station, Corvallis, Ore.

Approximately 30 per cent of the world's hops are grown in the three Pacific Coast states, with Oregon producing two-thirds of the 30 per cent. Little use has been made of chemical methods for hop evaluation in the United States, because of the lack, until recently, of satisfactory methods of analysis and the time required by the gravimetric procedure.

A discussion of a recently proposed colorimetric procedure is undertaken and several suggested modifications are outlined. The modified method is applied to Pacific Coast hops and a comparison of the data so obtained with those from gravimetric determinations indicates that, while not extremely accurate, the colorimetric method may have a definite use in conjunction with physical examination in evaluating hops.

RECENTLY, in the course of work on methods of hop analysis and chemical evaluation of hops, occasion arose to employ the colorimetric method for determination of the soft resins of hops originally suggested by Guthrie and Philip (*3*) in 1930, and later modified by French (*2*), Guthrie and Philip (*4*), and Comrie (*1*). It was soon found that many data obtained through use of the published procedures were not in agreement with data obtained by gravimetric analyses. Further observation clarified some difficulties and suggested modification of the existing methods. A discussion of some of these points may prove of interest to those engaged in chemical evaluation of hops. Particularly is this true since the investigation deals with Oregon-grown hops, which generally carry a somewhat higher soft-resins content and are employed to a greater extent by the brewing industry of the United States than the British or Continental hops worked with by the previously mentioned investigators.

Apparatus and Chemicals

A 5-cc. Bausch and Lomb colorimeter with all-glass cups was used exclusively. Readings to 0.1 mm. were possible on the vernier scale. Artificial illumination was by means of an enclosed electric lighting device made by the Bausch and Lomb Optical Company to fasten securely to the base of the instrument. A clear blue-glass disk was placed on the eyepiece to reduce the light intensity.

Ferric chloride, uranyl acetate, and uranyl nitrate were Baker's C. P. grade. Methanol, petroleum ether, and ether of suitable quality were used. The methanol, a synthetic product, was found to require no fractionation before use. Likewise, that recovered by distillation from previous use exhibited no color reaction with uranyl nitrate.

Experimental

COLOR STANDARDS. It was observed, as reported by Comrie (*1*), that uranyl nitrate and uranyl acetate were equally satisfactory for development of color in methanol solutions of pure α-resin. However, a precipitate formed in the uranyl acetate solution after standing for some days at room temperature in a dark cupboard. Because, in all attempts to use it directly in methanol extracts of hops, cloudiness developed which interfered with color matching, uranyl acetate was discarded in favor of uranyl nitrate for color development.

All attempts to utilize as a permanent color standard the 10 per cent ferric chloride solution suggested by Comrie (*1*) met with failure because the extreme density of color of such a solution rendered impossible accurate matching of color

with the colorimeter used. After a number of trials a 2.5 per cent ferric chloride solution containing 1 cc. of 1 N hydrochloric acid per 100 cc. was found to give a satisfactory color density when the blue-glass disk was used. Although no tests were made, it is considered advisable to employ an even more dilute ferric chloride solution if the blue-glass disk is not used on the eyepiece.

It was observed that the color intensity of a ferric chloride solution is not proportional to its concentration—for example, the color developed in a certain α-resin solution required 53.3 mm. of 2.5 per cent ferric chloride or 17.6 mm. of 10 per cent ferric chloride to effect a color match. If the color intensities were proportional to concentration, 53.3/4 mm. or 13.3 mm. of the 10 per cent ferric chloride should be required. It is therefore necessary actually to determine the color value in terms of α-resin for any strength of ferric chloride decided upon.

Table I. Loss in Color Value of Methanol Extracts of Hops

Hop	Depth to Match Color of 30 Mm. of 2.5 Per Cent $FeCl_3$ Solution						
	Immediately	1 hour	2 hours	18 hours	24 hours	42 hours	68 hours
	Mm.	*Mm.*	*Mm.*	*Mm.*	*Mm.*	*Mm.*	*Mm.*
1	20.8	23.5	24.8	19.9	24.7	23.6	32.7
2	16.8	18.5	18.6	16.4	20.2	17.7	21.0

Two lots of α-resin lead salt were prepared from portions of the same sample of minced hops. In one case the preliminary ether extraction advised by Hastings and Walker (*5*) and referred to by Guthrie and Philip (*3*, *4*) and Comrie (*1*) was carried out while in the other the ether extraction was omitted. The two compounds have been kept in weighing bottles in a desiccator in a well-lighted room for over 1.5 years without any apparent deterioration. Omission of the ether extraction of this particular hop, at least, did not produce an α-resin lead salt which differed from that obtained through use of ether extraction, as far as could be noted from the characteristics of the color standards prepared from them. These observations are contradictory to those of other workers, but, because of the limited nature of the tests, should not be considered conclusive until they have been verified on preparations from a number of hop samples.

The use of a dye mixture to compensate for the lack of chlorophyll in pure α-resin solutions is believed to be of questionable value, because the variation in a series of five or six readings on one solution is generally greater than the increase in color observed on an α-resin solution through the addition of the dye.

It was found that 1.0 cc. of a dye mixture (25 cc. of 0.1 per cent methanol solution of bromothymol blue, 1 cc. of 0.1 per cent methanol solution of xylene cyanol FF, and 40 cc. of methanol) diluted in α-resin solution to give 100 cc. of 0.01 per cent α-resin solution imparted a color approximating that of a 0.1 per cent hop extract. As nearly as could be determined on such weakly colored solutions, 1 cc. of the above dye mixture diluted to 100 cc. with methanol produced a color equivalent to that of 0.5 mm. of 2.5 per cent ferric chloride solution. Dye was not used in the work reported in this paper.

Permanence of α-Resin Solutions. Although the stability of α-resin solutions is not of prime importance when ferric chloride solution is employed as a standard for color comparison, a few tests were made incidental to other experiments. There appeared to be a slight change immediately after preparation (as directed by Comrie, *1*, except that a 0.01 per cent solution containing no dye was used) of the solution followed by stabilization within a few days. The α-resin solution was kept in a dark cupboard at room temperature except as it was removed to withdraw aliquots for color development.

Experiments on the change in methanol solutions of α-resin showed that the depth to match the color of 30 mm. of 2.5 per cent ferric chloride solution was as follows: immediately, 13.6 mm.; after 24 hours, 14.5 mm.; after 4 days, 15.1 mm.; after 8 days, 15.0 mm.

In another test no change was noted in an α-resin solution in which the color had been developed for a period of 24 hours. This observation substantiates in a limited way that of Guthrie and Philip (*4*), who state that they noted no changes over a 12-month period in the colored solutions.

Stability of Hop Extracts and Minced Hops. Contrary to Comrie's (*1*) experience and in accord with French's (*2*) findings, the color-producing value of methanol extracts of hops was found to decrease from the time they were prepared, and the loss of color-forming constituents was more rapid in 0.1 per cent than in 10 per cent extracts. Extracts from two different hop samples were prepared, using 5 grams of hops and 50 cc. of methanol (Table I). At the expiration of the indicated times, 1 cc. of the extract was placed in a 100-cc. flask, treated with uranyl nitrate, and diluted to 100 cc., and the color was immediately balanced against 30 mm. of 2.5 per cent ferric chloride. After the first two determinations the extracts were stored at approximately 0° C. (32° F.) except while removing aliquots. The average of 5 readings was chosen for each value.

Table II. Effect of Concentration on Rate of Change of Methanol Extract of Hops

	Depth to Match Color of 30 Mm. of 2.5 Per Cent $FeCl_3$ Solution			
	No. 1	No. 2	No. 3	No. 4
	Mm.	*Mm.*	*Mm.*	*Mm.*
Immediately	17.2	17.5	24.1	22.3
10 per cent extract after 5 days	20.5	20.1	..	..
0.1 per cent extract after 5 days	30.7	26.9	35.0	34.8

The difference in rate of change of the 10 per cent extract and the 1 to 100 dilution of the 10 per cent extract is indicated by data from four lots of hops (Table II). Both solutions were stored at 0° C. (32° F.) for 5 days. One cubic centimeter of the 10 per cent extract was then taken and diluted to 100 cc. and the color developed; in case of the dilute extract, the color was developed directly. An average of 4 or 5 readings was taken for each determination.

Examination of Table I reveals some figures which appear to be at odds with the general behavior of the solutions. This disagreement has also been noted frequently when working with other hop solutions. However, the apparent increase in color value so often occurs between 18 and 24 hours after the hop extract is prepared that the coincidence seems more than accidental, and the method of storage of the hop extract suggested a possible explanation. To expedite determinations and to prevent evaporation errors introduced through filtration of extracts, the author has made it a practice to shake the minced hops and methanol in a stoppered centrifuge bottle, and then to centrifuge the mixture for about 5 minutes. Aliquots of clear extract may then be pipetted from the supernatant liquid without resort to filtration. If a series of tests was to be made over a period of time the centrifuge bottle containing the hops and supernatant extract was stored at 0° C. (32° F.) in a refrigerator. It was thought that the presence of the extracted hops might be responsible for the peculiar results noted, possibly through some adsorption and re-solution phenomena. To check the surmise, a one-to-ten hop extract was prepared as described above and, after centrifuging, part of the clear liquid was transferred to a clean flask. Aliquots from both the centri-

fuge bottle and flask were then tested at intervals. The results appear in Table III, and are averages of five settings for each determination.

The trend of these data is very similar to that of Table I figures although, in the absence of hops in contact with the stored solution, the color value did not return as near to the original value as was the case of the solution on the centrifuged hops. It would seem, therefore, that the suggested reason for the observed behavior of the solution is in part, at least, untenable. The questions raised by these observations remain, for the present, unanswered.

In connection with the discussion of hop extracts it may be of interest to record the differences in color value noted when the color was developed directly in the methanol extract and when the color was developed in a methanol solution of the material removed from the original methanol hop extract by shaking out with petroleum ether. The colorimetric procedure assumes that the color formation is brought about through the reaction of the uranium salt with the soft resins, and that petroleum ether extracts only the soft resins from a methanol hop extract. Therefore, the color value obtained on a hop by either procedure should be the same and Guthrie and Philip's (*3*) procedure indicates such to be the case. The data, however, did not substantiate the assumption when the method was applied to four hops treated in the manner indicated. One hop was 22 months old and the other three were 10 months old, and all had been kept in cold storage from the time they were baled. In one set of samples the colorimetric determination was made as usual, directly on the methanol extract; in the second set, aliquots of the methanol extracts were placed in separatory funnels with the proper amount of 1 per cent sodium chloride solution and extracted five times with petroleum ether. Aliquots of the petroleum ether extracts were evaporated to dryness in a vacuum oven at 40° C., the residues were dissolved in methanol, and the color was developed. An average of five readings was taken for each value recorded and comparisons were made against 30 mm. of 2.5 per cent ferric chloride.

Table III. Effect of Presence of Hops on Change in Color Value of the Methanol Extract

Hop Extract	Depth to Match Color of 30 Mm. of 2.5 Per Cent $FeCl_3$ Solution						
	Immediately	1 hour	3 hours	5 hours	7 hours	23 hours	47 hours
	Mm.	*Mm.*	*Mm.*	*Mm.*	*Mm.*	*Mm.*	*Mm.*
In contact with hops	11.5	12.0	12.1	15.2	14.7	12.5	14.6
Free of hops	..	12.2	14.0	16.3	17.0	14.9	22.8

If the precautions taken to prevent oxidation or loss of soft resins during extraction with and removal of petroleum ether may be considered effective, it would appear that a portion of the color must originate in constituents other than the soft resins, when the method is applied directly to the methanol extract. On the other hand, the preservative value calculated from the color value on methanol extracts more nearly agreed with that from gravimetric data than did that calculated from the color value of the petroleum ether residues. At any rate, the matter should be considered as yet open to question.

Minced hops, stored in a stoppered bottle at 0° C. (32° F.), were found to give the same colorimetric values after 2 weeks' storage as at the time of grinding.

Color Development. Guthrie and Philip (*3*) recommended 10 cc. of 0.5 per cent uranyl acetate solution as sufficient to develop maximum color in a solution containing 0.01 gram of α-resin or in methanol extract equivalent to 0.1 gram of hops. In their second paper (*4*) the amount of uranyl acetate was doubled, 10 cc. of a 1.0 per cent solution being specified. French (*2*) and Comrie (*1*) chose uranyl nitrate and used essentially 10 cc. of a 1.0 per cent methanol solution to develop the color in the amounts of α-resin or hops indicated by Guthrie and Philip (*3*), apparently with satisfactory results.

Table IV. Effect of Petroleum Ether Extraction on Color Value

	Depth to Match Color of 30 Mm. of 2.5 Per Cent $FeCl_3$ Solution			
	No. 1	No. 2	No. 3	No. 4
	Mm.	*Mm.*	*Mm.*	*Mm.*
Methanol extract	18.3	19.0	21.7	18.2
Residue from petroleum ether extract	23.8	25.4	32.9	23.6

After obtaining some rather erratic results on both pure α-resin solutions and hop extracts, it was found that more uranyl nitrate was required to develop maximum color in α-resin solutions than had been previously supposed.

Two tests on α-resin lead salt were carried out: In the first, 1.0 per cent uranyl nitrate was used but, because the volume required was large, a 2.5 per cent solution was employed in the second test. The results are similar, so only the data of the second test are presented. The test solutions were prepared by decomposing 0.1580 gram of α-resin lead salt in 3 to 4 cc. of methanol with 2.5 cc. of 20 per cent sulfuric acid by grinding in a mortar, transferring to a separatory funnel, adding 50 cc. of aqueous 1.0 per cent sodium chloride, and extracting 5 times with petroleum ether. The petroleum ether was removed in vacuum at 40° C. and the residue dissolved in methanol and made to 100-cc. volume. Aliquots (5 cc., equivalent to 0.005 gram of α-resin) were placed in 50-cc. flasks with the indicated amounts of 2.5 per cent uranyl nitrate solution and made to volume. Comparison was against 30 mm. of 2.5 per cent ferric chloride. Averages of 5 settings of the colorimeter were taken for each result.

The depth to match the color of 30 mm. of 2.5 per cent ferric chloride solution, when the substance tested was 0.005 gram of α-resin in 50 cc., was found to be as follows:

2.5 per cent uranyl nitrate, cc.	2	3	4	5	6	7
α-resin solution, mm.	17.0	14.1	13.5	13.8	13.6	13.6

These data indicate that at least 4 cc. of the 2.5 per cent uranyl nitrate solution are required, which is equivalent to 20 cc. of 1.0 per cent solution, per 0.01 gram of α-resin. In order to ensure an excess of reagent, the writer uses 10 cc. of the 2.5 per cent solution for each 0.01 gram of α-resin or for methanol hop extract equivalent to 0.1 gram of hops. The extra color imparted by the uranyl nitrate solution itself is not significant, when compared to the magnitude of other errors inherent to the method.

Colorimetric Procedure

The following outline of the colorimetric procedure is a modification of that suggested by other workers and incorporates several changes which seem warranted from the observations and data presented in this paper.

Reagents. Synthetic methanol. Petroleum ether, b. p. under 60° C. Ethyl ether.

$Pb(C_2H_3O_2)_2 \cdot 3H_2O$, c. p., 1 per cent methanol solution containing 1 cc. of glacial acetic acid per liter.

$FeCl_3 \cdot 6H_2O$, c. p., 2.5 per cent aqueous solution containing 10 cc. of 1 *N* hydrochloric acid per liter. (A lower concentration of ferric chloride may be used if preferred.)

$UO_2(NO_3)_2 \cdot 6H_2O$, c. p., 2.5 per cent methanol solution, stored in a brown bottle in the dark when not in use.

NaCl, 1 per cent aqueous solution.

Preparation of α-Resin Lead Salt for Standardization. A good quality of hop is passed through a food chopper fitted with a 12- to 16-point cutter. Twenty-gram samples are weighed into two 250-cc. capacity centrifuge bottles, 200 cc. of ethyl ether are added to each; they are shaken on a mechanical shaking

device for an hour, and centrifuged, and 200 to 300 cc. of clear extract, equivalent to 20 to 30 grams of hops, are evaporated to dryness in vacuum at 40° C. The residue is dissolved in methanol and filtered, and the filtrate is divided roughly into four portions which are placed in four 250-cc. separatory funnels, each containing 100 cc. of 1 per cent sodium chloride solution. Each portion is extracted five times with 40- to 50-cc. portions of petroleum ether which are passed through a filter paper. The combined petroleum ether extracts are evaporated to dryness in vacuum at 40° C., taken up in 160 to 240 cc. of methanol, depending upon the quantity of hops represented, and the α-resin lead salt is precipitated as described by Walker and Hastings (*6*) in their gravimetric method for α-resin determination. The precipitate is filtered on paper and washed thoroughly with methanol followed by ethyl ether, after which it is dried in vacuum at 40° C.

Standardization of 2.5 Per Cent Ferric Chloride Solution. A 0.0158-gram sample of the α-resin lead salt (equivalent to 0.01 gram of α-resin) is ground in a mortar with 2 to 5 cc. of methanol and 0.5 cc. of 20 per cent sulfuric acid. The decomposed salt is washed with methanol into a separatory funnel containing 25 cc. of 1 per cent sodium chloride, and extracted with five 10- to 15-cc. portions of petroleum ether. After filtration the filtrate and washings are evaporated to dryness in vacuum at 40° C., taken up in methanol, and filtered into a 100-cc. flask. Ten cubic centimeters of 2.5 per cent uranium nitrate solution are added, and the flask contents are well mixed and made to volume with methanol. The color value is then compared to that of 2.5 per cent ferric chloride solution in a suitable colorimeter. Because the same depth of ferric chloride solution will be used against unknown hop extracts, it is convenient to select a suitable depth, say 20 or 30 mm. of ferric chloride solution, and adjust the α-resin standard against it rather than vice versa. Designate the α-resin color setting as A.

Determination of Preservative Value of a Hop. Ten grams of ground hops and 100 cc. of methanol in a centrifuge bottle are shaken in a mechanical shaking machine for 15 to 20 minutes and centrifuged, and 1.0 cc. of clear extract is transferred to a 100-cc. flask, together with 10 cc. of 2.5 per cent uranyl nitrate solution and, after mixing, the flask is filled to the mark with methanol. The color is immediately compared to that of the same depth of 2.5 per cent ferric chloride as was used against the α-resin standard. (To economize on reagents one may use 0.5 cc. of hop extract plus 5 cc. of uranyl nitrate made to 50-cc. volume and obtain the same result.) Designate the color reading of the hop extract as B.

(In their broader interpretation the terms "preservative value" and "brewing value" are frequently used synonymously. In a strict sense "preservative value" is a measure of the inhibitory effect of the soft resins of hops on the growth of certain lactic acid–forming bacteria in beer or wort. The use of the formula $\alpha + \frac{\beta}{3}$ for "preservative value" in this paper does not necessarily imply that it is the correct one, but that it furnishes as accurate a means as is at present available for the comparison of gravimetric and colorimetric data for soft resins of hops.)

Calculation of Preservative Value. Since the depth of ferric chloride solution is the same in both standardization and determination, it is eliminated from the calculation. The ratio of the setting for α-resin to the setting for an equal weight of hops then becomes $\frac{10A}{B}$, because 0.01 gram of resin per 100 cc. is compared to 0.1 gram of hops per 100 cc. and is comparable to Walker and Hastings' $\alpha + \frac{\beta}{3}$ derived from gravimetric data. Or if it is wished to use $10\left(\alpha + \frac{\beta}{3}\right)$ as is commonly done to express the preservative value (PV) from gravimetric data, the equation for the corresponding colorimetric value becomes $PV = \frac{100A}{B}$.

To give an idea of the accuracy which may be expected of the colorimetric method in its present state of perfection, the data in Table V, calculated from both gravimetric and colorimetric determinations for 1936 crop Oregon-grown Fuggles and Late Cluster varieties of hops, are recorded.

Table V. Analysis of Hops

Sample	Date of Analysis	α-Resin %	β-Resin %	PV $10\left(\alpha + \frac{\beta}{3}\right)$	Colorimetric $\frac{100A}{B}$
Fuggles, 1936	10–19–36	3.98	7.94	66.3	65.3
	10–7–36	4.32	8.32	70.9	74.7
	10–19–36	4.10	7.82	67.1	68.3
	10–7–36	3.83	8.44	66.4	75.6
	10–19–36	4.26	7.74	68.4	76.3
	10–19–36	3.98	7.65	65.3	76.3
	10–19–36	4.70	8.47	75.2	80.9
	10–7–36	4.49	8.35	72.7	78.1
	11–4–36	4.81	8.09	75.1	85.5
	11–4–36	4.59	8.03	72.7	89.3
	11–20–36	3.93	7.87	65.5	71.5
	11–20–36	3.81	7.66	63.6	71.6
	11–20–36	4.22	8.10	69.2	75.6
	11–20–36	4.15	7.89	67.8	71.9
	11–20–36	3.81	7.62	63.5	67.0
	11–20–36	3.94	7.03	62.8	74.7
	11–27–36	4.58	7.13	69.6	88.9
	11–27–36	5.02	6.64	72.3	92.6
Late Clusters, 1936	10–7–36	6.68	10.49	101.8	100.7
	10–29–36	6.25	11.25	100.0	118.3
	10–7–36	6.94	11.18	106.7	108.7
	10–14–36	7.04	10.94	106.9	112.5
	10–29–36	6.37	11.17	100.8	103.1
	10–29–36	5.92	10.73	95.0	120.4
	10–29–36	6.92	11.08	106.1	110.4
	11–4–36	6.18	10.44	96.6	106.2
	11–4–36	5.77	10.67	93.3	100.0
	10–14–36	5.53	9.67	87.5	103.8
	11–4–36	5.43	9.37	87.5	105.2
	10–14–36	6.65	11.18	102.5	105.3
	10–14–36	6.74	11.34	105.2	111.5
	10–14–36	6.22	10.90	99.5	101.5
	11–17–36	6.34	10.84	99.5	112.3
	11–17–36	6.30	10.45	97.8	110.6
	11–17–36	4.44	10.16	78.3	93.2
	11–17–36	5.56	8.26	83.1	105.4
	11–17–36	7.05	10.95	107.0	118.2
	11–27–36	7.15	10.68	107.1	112.3
	11–27–36	6.32	10.01	96.6	99.2
	11–2–36	6.16	10.41	96.3	108.8
	12–9–36	6.40	10.35	98.5	99.2
	12–9–36	5.83	10.17	92.2	96.5
	12–9–36	7.04	10.66	105.9	103.7
	12–9–36	5.42	9.31	85.2	86.6
	12–9–36	5.23	9.12	82.7	89.9
	12–14–36	4.85	9.19	79.1	86.0
	12–14–36	4.75	8.89	73.8	85.5
	12–14–36	6.55	10.76	101.4	102.2
	12–14–36	6.75	10.85	103.7	103.1
	12–14–36	6.75	11.00	104.2	103.0
	12–21–36	6.19	10.79	97.9	110.6
	12–21–36	6.61	10.64	101.6	117.2
	12–21–36	6.80	11.10	105.0	115.4
	12–21–36	6.33	11.27	100.9	108.0
	12–21–36	6.98	11.41	107.8	116.2

It requires no more than a glance at Table V to realize that the agreement between the two methods is in many cases far from satisfactory. Guthrie and Philip (*3, 4*) likewise obtained poorer correlation with the few Oregon hops they tested than with the English hops. In practically all instances the colorimetric result is higher than that obtained from the gravimetric method, although the reverse is true when compared to $10\left(\alpha + \frac{\beta}{3}\right)$ for most of the data published by other investigators.

Summary and Conclusions

A study of colorimetric methods proposed for determining the preservative value of hops suggests the need of some modification to make the methods suitable for application to Oregon-grown hops. Data relative to a number of controversial points are submitted and several minor changes are incorporated in the procedure as finally employed.

Comparison of results obtained by the method with those obtained from gravimetric analyses leads to the conclusion that the colorimetric method in its present form cannot be relied upon to yield a particularly accurate estimation of the preservative value of Oregon-grown hops. However, it is believed that its employment in conjunction with the commonly used physical tests offers a rapid and more accurate means of arriving at the quality of a hop than can be expected from physical examination alone. For exact data, the more tedious gravimetric methods are still to be preferred.

Literature Cited

(1) Comrie, A. A. D., *J. Inst. Brewing*, 40, 420 (1934).
(2) French, J. M., *Ibid.*, 37, 436 (1931).
(3) Guthrie, J. M., and Philip, G. G., *Ibid.*, 36, 455 (1930).
(4) *Ibid.*, 39, 220 (1933).
(5) Hastings, J. J. H., and Walker, T. K., *Ibid.*, 34, 9 (1928).
(6) Walker, T. K., and Hastings, J. J. H., *Ibid.*, 39, 509 (1933).

Received April 14, 1937. Published with the approval of the director of the Oregon Agricultural Experiment Station as Technical Paper 265 submitted by the Chemistry Division.

Carotenoids in Yellow Corn

Quantitative Estimation from Modified Absorption Spectra Measurements of Carotenoids in Yellow Corn of Different Varieties and Qualities

GEORGE L. CLARK AND JOHN L. GRING, University of Illinois, Urbana, Ill.

THERE are several pigments in yellow corn; all present to any extent may be classed as carotenoids. This classification includes hydrocarbons, alcohols, acids, and ketones. However, the three most important ones in corn are carotene, $C_{40}H_{56}$, a hydrocarbon, cryptoxanthin, $C_{40}H_{56}O$, and xanthophyll or zeaxanthin, $C_{40}H_{56}O_2$.

Early investigations pointed to a great difference in vitamin A content of white and yellow maize. Euler (*1*) limited the activity to the carotenes $C_{40}H_{56}$. The zeaxanthin, $C_{40}H_{56}O_2$, isolated by Karrer (*3*) was found to be completely without growth-promoting ability when fed to rats. Kuhn and Grundman (*5*) isolated cryptoxanthin, with the formula $C_{40}H_{56}O$, which does have growth-promoting ability.

The present work was undertaken in order to determine how carotene, cryptoxanthin, and xanthophyll contents might vary in different varieties of yellow corn; whether the ratio of carotene plus cryptoxanthin to xanthophyll content is constant; and how the carotenoid content differs between sound corn and damaged corn of the same variety. Since absorption spectra are the most important means of identification of these compounds, the method was adopted for these determinations.

Adaptation of Available Apparatus

The spectrograph available was a Bausch and Lomb medium-sized quartz spectrograph, fitted with a slit operated by a micrometer screw so that the slit width could be read directly in 0.01-mm. intervals and estimated to a micron. The procedure was to make a series of spectrograms, in which the slit width was decreased gradually, while the absorption cell filled with solvent was placed in the light path. This gave a set of reference spectra which could be used in evaluating intensities, *I*. The absorption cell was then emptied, filled with solution, and replaced in the light path, and the absorption spectrum was photographed. At this time the slit width was usually equal to the maximum width employed in making the reference spectra. During a set of exposures all conditions were kept as constant as possible except for the variation of slit width. By putting such a series of reference spectra on each plate, any variation in general background fogging, variation in developing conditions, etc., would be without effect in interpretation of spectrograms.

The light source used in this work was an underwater spark described in a recent paper (*2*).

The most serviceable form of absorption cell was one whose body was a short length of 14-mm. Pyrex tubing with a side arm of 4-mm. Pyrex tubing and 60 mm. in length. The ends of the large Pyrex tubing were ground perpendicular to the longitudinal axis of the tubing. Plates of plane polished vitreous silica 1 mm. thick were then fixed on the open ends with molten silver chloride as adhesive. This cell had a length of 20.4 mm. between the inner surfaces of the silica plates.

Preparation of Samples for Analysis

The most satisfactory method for grinding the corn was with the use of a 20-cm. (8-inch) flint ball mill. A representative 50-gram sample was placed in the mill, and the air displaced by dropping in solid carbon dioxide and allowing it to vaporize. The sample was then ground for 12 to 20 hours, and the material screened with an 80-mesh screen. Alternate sieving and grinding of the coarse material were continued until the entire sample passed the sieve. The entire ground sample was then mixed, reweighed, and stored in carbon dioxide in the dark at 4° C. until used.

As carotenoid extraction was started, samples were weighed out equivalent to 10 grams of corn. Methanol was found most satisfactory to extract the color. Portions of methanol were added and centrifuged to facilitate removal of the liquid until extraction was complete. This usually required 120 cc., in five portions, per sample. Solid potassium hydroxide was added to the alcoholic extracts to make a 5 to 7 per cent solution. Saponification of any xanthophyll esters proceeded for 2 to 3 hours. Petroleum ether (low-boiling) was added to extract the carotenes and cryptoxanthin from the xanthophylls. The layers were separated and a fresh portion of petroleum ether was added. This process was continued until extraction was complete. The combined petroleum ether fractions were then washed with 10 per cent potassium hydroxide–90 per cent methanol until any small amount of xanthophyll was removed. The petroleum ether fraction was then washed with water until the alkali was removed. The next steps were to evaporate the fraction to dryness in a vacuum desiccator at room temperature or lower to eliminate a possibility of an emulsion, and to add a given volume of petroleum ether (low-boiling) to the solid pigment. This solution containing the carotenes and the cryptoxanthin was then ready to use in production of an absorption spectrum.

Purification of the xanthophyll fraction was similar to that of the carotenes. The alkaline solution was diluted with two volumes of water, and cooled, and portions of diethyl ether were added and removed until no more color passed into the ether. The methanol-water layer, usually nearly colorless, was then discarded. The combined xanthophyll fraction was washed with water to free it of potassium hydroxide, and evaporated to dryness in a vacuum desicca-

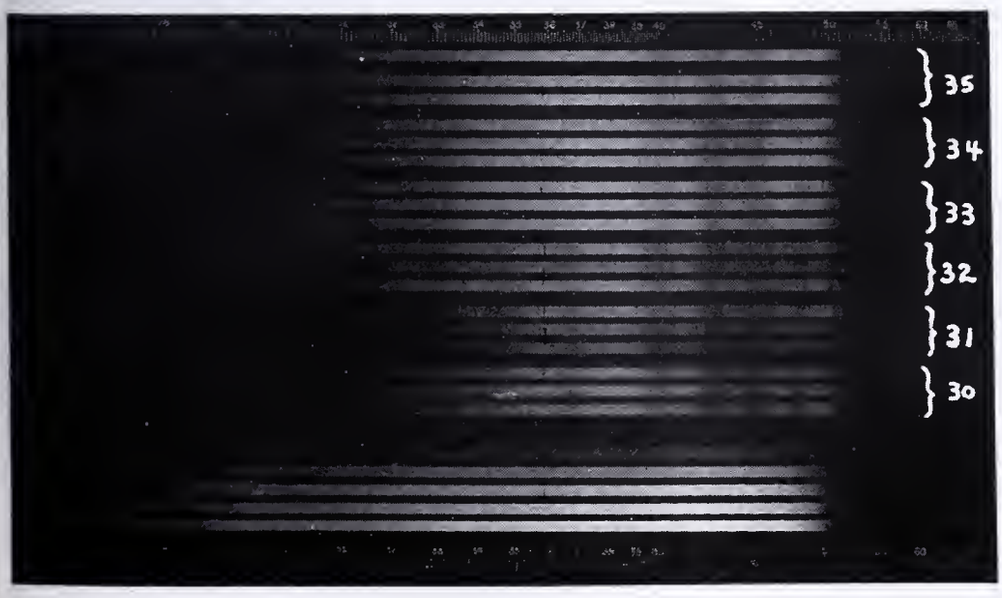

FIGURE 1. TYPICAL ABSORPTION SPECTRA OF CAROTENE-CRYPTOXANTHIN FRACTIONS IN YELLOW CORN

Standard continuous spectra (below) with varying slit widths (0.02 to 0.15 mm.)

tor; 95 per cent ethanol was added to dissolve the solid residue and the solutions were then ready for use in making an absorption spectrum.

The appropriately diluted solution was placed in the cell and duplicate or triplicate spectrographic exposures were made. Usually a solution representing the same sample was used at different concentrations in order to give a suitable spectrum.

TABLE I. RESULTS OF PHYSICAL TESTS

Variety	Pounds per Bushel	Per Cent of Cracked and Foreign Material	Per Cent by Weight of Damaged Corn	Number of Kernels per 100 Grams
Krug (sound)	58.4	0.150	2.03	461.8
Krug (damaged)	56.8	0.486	4.68	591.5
Funk Hybrid 214 (sound)	60.8	0.014	1.52	371.0
Funk Hybrid 214 (damaged)	58.4	0.081	9.07	515.0
Morgan 106 (sound)	59.7	0.239	3.46	322.6
Morgan 106 (damaged)	54.0	0.483	7.66	512.0
Indiana Hybrid 880 (sound)	58.57	0.453	0.24	810.0
Indiana Hybrid 880 (damaged)	42.39	0.268	55.95	750.0

Figure 1 is a print of the absorption spectra of the carotene fractions of Indiana Hybrid 880, together with a series of "standard" spectrograms.

Interpretation of Spectrograms

To interpret the spectrograms, relative intensities of the standard spectrograms and of the absorption spectrograms at a desired wave length must be measured accurately. For this purpose a microphotometer was employed. In using this instrument the spectrographic plate is conveyed transversely across the spectrograms at a uniform rate while perpendicular to a light beam which, after transmission through the plate, is focused on a thermopile. Variations in the intensity of the beam incident on the thermopile cause an electromotive force of corresponding variations to be produced, which is recorded by a light reflected from the swinging mirror of a sensitive galvanometer. Since the variations in the light incident on the thermopile are caused by differences in blackening of the photographic emulsion on the spectrographic plate, the microphotometer trace can then be correlated with intensities of the spectrogram.

Figure 2 is a reproduction of microphotometer traces of the absorption spectrograms of the carotene-cryptoxanthin fractions of Indiana Hybrid 880, sound corn; and of standard reference spectra for different slit widths of the spectrograph photographed on the same plate. The *b*-level is used as a base line for making other measurements. Tracings at the *b*-level were made when there was no light whatever falling on the microphotometer thermopile, and correspond to the rest point of the galvanometer. The *f*-level is reached while the light is passing through a region of general fogging (background) on the spectrographic plate. The *s*-level is produced while a spectrogram is intercepting the light beam directed onto the thermopile of the microphotometer. Except for adjustments made on the microphotometer, the *b*-level and *f*-level should remain practically constant. The *f*-level will be changed if there is a change in the amperage passing through the illuminating bulb. This current is supplied by storage batteries to increase its constancy. Variations in the *s*-level then correspond to variations in blackening of the spectrograms. The distances *s* to *f* and *b* to *f* were measured directly from the microphotometer traces. The ratio $(s-f)/(b-f)$ was then calculated in all cases. The less absorption the higher will be this ratio and vice versa. In order to correlate this ratio with actual light intensities, the standard reference spectra were employed. The standard spectrogram produced with the same maximum slit width (0.15 mm.) as was used for all the absorption spectrograms, was assigned an arbitrary I_0 (initial intensity) value of 10; others photographed with narrower slits were assigned correspondingly smaller I_0 values, as, for example, $0.06/0.15 \times 10$ for the 0.06-mm. slit width.

Figure 3 shows a plot as obtained from data of the microphotometer traces shown in Figure 2 (standard spectrograms). From this curve, the value of the intensity, I, corresponding to a ratio of $(s-f)/(b-f)$ measured for an absorption spectrogram of an unknown can be evaluated at once. Then values for $\log I_0$ (where I_0 is usually 10) and $\log I$ can be obtained and substituted in the formula $\log I_0 - \log I = ksc$, where k is the extinction coefficient, s is the cell thickness, and c is the concentration of the solution. If the absorption spectrogram corresponds to a solution of known concentration, c, the extinction coefficient, k, can be determined; if k is known, c can be calculated if the spectrogram is of an unknown.

Experimental Calculation and Results

All the samples with the exception of one, a white corn sample, were supplied by George Dungan of the University of Illinois Agronomy Department. In Table I are listed the results of physical tests on these specimens. Absorption spectra were also made of solutions of α-carotene, β-carotene, and xanthophyll, which were purchased ready prepared, in order to determine values of k, the extinction coefficient, at any wave length desired.

The following positions of maximum absorption were determined (corrected wave lengths):

α-Carotene	λλ4730, 4440, 4240, 2660 Å.
β-Carotene	4820, 4490, 4240, 2700
Xanthophyll (leaf)	4730, 4430, 4200

These data compare favorably with those of other investigators. Corn xanthophyll (zeaxanthin) and cryptoxanthin in benzene apparently both have absorption bands at λλ4850 and 4530 Å.

The wave length 4500 Å. was found to be the most suitable in the carotene spectrum to determine the extinction coeffi-

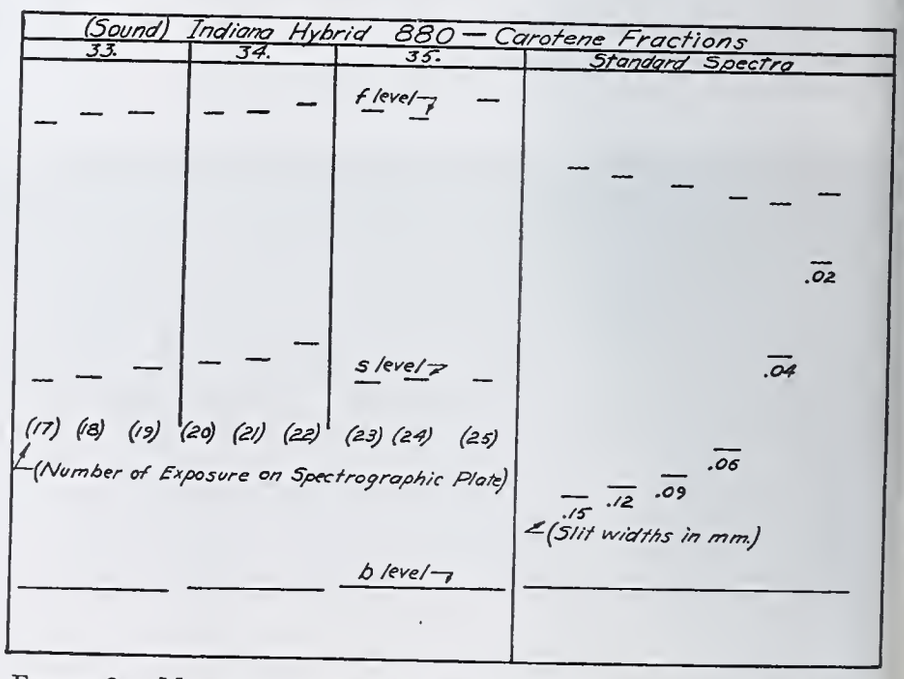

FIGURE 2. MICROPHOTOMETER TRACES OF SPECTRUM INTENSITIES LEADING TO DIRECT MEASUREMENT OF RATIO $(s-f)/(b-f)$

b, base line. *f*, general background fogging. *s*, blackening of photographic emulsion across spectrogram

Left, typical absorption spectra (Figure 1) of carotene-cryptoxanthin fractions. Right, standard spectra at various slit widths (*s*-levels)

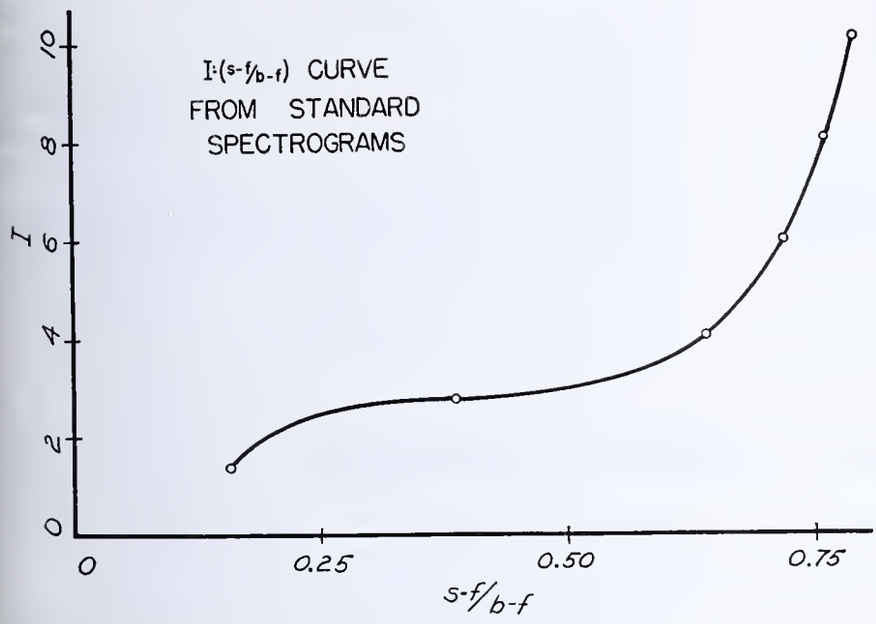

FIGURE 3. CURVE OBTAINED BY PLOTTING $(s\text{-}f)/(b\text{-}f)$ VALUES MEASURED FOR STANDARD SPECTRA IN FIGURE 2, AGAINST INTENSITIES AS A FUNCTION OF SLIT WIDTH

I for maximum width used for absorption spectra is arbitrarily given value 10. From this curve I values are determined for absorption spectra of unknowns.

cient and make subsequent measurements on absorption spectra. In the formula, $\log I_0 - \log I = ksc$, it was found most convenient to have k evaluated when s, cell thickness, was expressed in millimeters and c, concentration, in gamma (gamma $= 10^{-6}$ gram) per cubic centimeter. Thus k for β-carotene at $\lambda 4500 \pm 10$ Å. was found equal to 2.1×10^{-2}; k for xanthophyll at $\lambda 4500 \pm 10$ Å. was 6.4×10^{-3}. New values for extinction coefficients for β-carotene have been published recently by Peterson, Hughes, and Freeman (*7*).

The averaged results of quantities are tabulated in Table II. In these calculations the extinction coefficient for carotene is used for the petroleum-phasic fraction containing both carotene and cryptoxanthin since the coefficient for the latter is not known.

The carotene-cryptoxanthin fraction of a sample of Indiana Hybrid 880 sound corn was chosen for purposes of illustrating the method of calculation. A print of the absorption spectrum of this particular sample is shown as No. 35 in Figure 1. Figure 2 shows the microphotometer trace made across this plate at $\lambda 4500$ Å. Figure 3 shows a graph of the ratio $I:(s\text{-}f)/(b\text{-}f)$ as obtained from this same microphotometer trace of the "standard" spectrograms. Measurements of the three traces from absorption spectrograms of sample 35 give $(s\text{-}f)/(b\text{-}f)$ values of 0.57, 0.55, and 0.57. These are evaluated in terms of I from the graph shown in Figure 3. Then values for $(\log I_0 - \log I)$ are obtained equal to 0.48, 0.49, and 0.48, respectively. Substituting the value of k as 2.1×10^{-2}, and s as 20.4, and v as 10 cc. in $\log I_0 - \log I = ksc/v$, values of 11.3, 11.6, and 11.3 gamma per 10 grams of corn are obtained, giving an average result of 11.4 for the three analyses of this sample.

Conclusions

An inspection of column 2, Table II, shows that with the one exception of Krug corn, more carotene (and cryptoxanthin) was obtained from the damaged samples of corn than from the corresponding sound varieties. This result was quite unexpected. The same is found to hold true for the xanthophyll content. This led to a calculation of the ratio of carotene content to xanthophyll content, which result is shown in column 4. In every case there is a definitely higher ratio in the tests on the sound corn, which would indicate, as would be expected, that there is an oxidation of carotene as decay takes place. An examination of carotenoids previously listed would indicate that an oxidation of carotene would not be unexpected. In fact, numerous investigators have taken precautions to keep their carotene from being oxidized. McNicholas (*6*) shows that there is only a slight change within a period of 55 days.

Why there should be more carotenoids from the damaged corn than from the sound is without good explanation. To investigate the possibility of a modified cell structure which allowed more complete extraction in the former case, a portion of the extracted residues was examined under a microscope and no evidence of color could be seen in any case. A similar examination of the unextracted sample easily disclosed highly pigmented particles. As another check, a sample extracted according to the method described was placed in a small steel ball mill and ground while under alcohol. The alcohol was found colorless when centrifuged from the solid residue. Extended extraction of other samples for a period of a week yielded no more carotenoids. Therefore, it seems that there are actually more carotenoids in the damaged corn. Possibly a synthesis of carotenoids is aided by conditions of decay. Kuhn (*4*) states that when tomatoes are plucked green and allowed to ripen, the carotenoid content increases to a value greater than would be obtained from a simple direct combination of any molecules already present at the time of picking. This indicates a synthesis within the fruit itself, when isolated from the plant.

A comparison of one variety with another indicates that the contents are not at all constant. The authors have also made a few isolated analyses on very fresh corn from which more carotenoids could be extracted than from the samples used in this set, all of which were more than one year old at the time of analysis. Therefore, the interval of time between harvesting and testing is another factor to be considered.

All of the samples, with the exception of the Krug sample, were of hybrids, whose properties are often erratic.

TABLE II. AVERAGED RESULTS

Variety	Petroleum-Phasic Fraction (Carotene-Cryptoxanthin) Content (1)	Xanthophyll Content (2)	Ratio 1:2	Ratio 2:1
	Gamma per 10 grams of corn			
Krug (sound)	7.2	240	0.030	33.3
Krug (damaged)	4.0	200	0.020	50.0
Funk Hybrid 214 (sound)	3.3	50	0.066	15.0
Funk Hybrid 214 (damaged)	5.7	130	0.044	22.8
Morgan 106 (sound)	1.0	22	0.045	22.0
Morgan 106 (damaged)	4.3	190	0.023	44.2
Illinois Hybrid 168 (sound)	1.4	97	0.014	69.2
Indiana Hybrid 880 (sound)	11.1	330	0.034	29.7
Indiana Hybrid 880 (damaged)	11.3	640	0.018	56.7
A white corn	None	None	...	..

Attention should also be called to the fact that the carotenoids are distributed near the surface of corn kernels. Therefore, the greater the surface area, the greater the quantity of carotenoids to be expected. A comparison of grain size with carotenoid content shows an inverse ratio holding true with the exception of the Krug variety.

The ratio of xanthophyll content to carotene content, as shown in Table II, indicates the overwhelming preponderance

of xanthophyll. This is of interest because xanthophyll has been shown to be without growth-promoting ability, in contrast to carotene.

One other set of analyses on carotenoids in corn is reported by Kuhn and Grundman (*5*), who analyzed a sample of Italian corn and two of Hungarian corn. They report 7 gamma or less of carotene present per 10 grams and xanthophyll contents of 170 to 210 gamma per 10 grams of corn, which is in satisfactory concordance with the results here reported.

Literature Cited

(1) Euler, B. v., Euler, H. v., and Hellström, H., *Biochem. Z.*, **203**, 270 (1928).
(2) Gring, J. L., and Clark, G. L., *Rev. Sci. Instruments*, **7**, 305 (1936).
(3) Karrer, P., Salomon, H., and Wehrli, H., *Helv. Chim. Acta*, **12**, 790 (1929).
(4) Kuhn, R., *J. Soc. Chem. Ind.*, **52**, 981 (1933).
(5) Kuhn, R., and Grundman, C., *Ber.*, **67**, 593 (1934).
(6) McNicholas, H. J., *Bur. Standards J. Research*, **7**, 171 (1931).
(7) Peterson, W. J., Hughes, J. S., and Freeman, H. F., Ind. Eng. Chem., Anal. Ed., **9**, 71 (1937).

Received March 8, 1937.

Errors of the Glass Electrode

WILLIAM C. GARDINER AND HERBERT L. SANDERS
The Mathieson Alkali Works (Inc.), Niagara Falls, N. Y.

It has been found that at temperatures above 30° C. the glass electrode is not in agreement with the hydrogen electrode, exhibiting deviations not only in the alkaline but also in the neutral and acid ranges. The magnitude of these deviations is greatly influenced by temperature changes and by the sodium-ion concentration. These departures are entirely reproducible, however, and correction curves have been furnished for use with two commercial types of glass electrode. The theory of these errors is briefly reviewed.

MOST of the pioneer work on the behavior of the glass electrode stressed its usefulness rather than its limitations. When it became increasingly obvious that deviations from ideal behavior were occurring in alkaline solution, attention was turned in this direction. Of the large number of investigations on the so-called "alkaline errors," that of Dole (*3*) is the most complete. Even this was not carried out under those extreme conditions which are so often encountered in industrial work, and it became desirable to learn the limitations of the electrode as a research and control tool in working with saturated sodium chloride solutions at room temperatures and higher.

Experimental Procedure

Since the object of this work was essentially practical—viz., to provide a set of correction curves for use with glass electrodes in industrial applications—it was thought best to use standard commercial equipment in the study.

Two types of commercial apparatus were used. One was a Leeds & Northrup No. 7685 glass-bulb type of electrode, made from Corning 015 glass of the approximate composition Na_2O 22 per cent, CaO 6.0 per cent, and SiO_2 72 per cent. The diameters of the bulbs were 24 ± 2 mm., and the thickness was 0.025 to 0.06 mm. They were on a stem 125 mm. long and 16 mm. in diameter. Their low resistivity (about 8 megohms) enables measurements to be made with a fairly sensitive galvanometer and a potentiometer. This is especially true above room temperature, for the resistivity of the glass falls rapidly as its temperature rises. For the inner reference electrode a special form of quinhydrone electrode is supplied, and its tip is immersed in a hydrochloric acid solution of pH 1.00. Measurements were also made with a commercial vacuum-tube outfit known as the Coleman pH electrometer, which is equipped with special glass electrodes, having as inner reference a Pb-$PbCl_2$ electrode in 0.2 *N* hydrochloric acid. The glass electrodes with this equipment had a glass bulb 18 ± 2 mm. in diameter made of the same type of glass. These electrodes have a resistance between 75 and 120 megohms.

Two Leeds & Northrup and three Coleman electrodes were used in the same solution. The average correction for each type of electrode was determined.

All measurements were made under equilibrium conditions in an oil bath with the temperature constant to ±0.1° C.

The solutions measured were buffers of constant sodium-ion content (and, in one case, of potassium-ion), since this was the factor of most interest here. The actual system used was as follows:

A 0.1 *N* solution of "Prideaux-Ward universal buffer" (*1*) was made up with a certain concentration of sodium chloride. To this was added 0.2 *M* sodium hydroxide containing the same concentration of sodium chloride. In this way the sodium-ion content was maintained constant as the pH increased. The value of the pH after 5 cc., 10 cc., etc., of base had been added was found in a separate hydrogen-electrode experiment. In this way the pH as found by the glass electrode in such a solution can be compared with that given by the hydrogen electrode. Such comparisons were carried out, and correction curves plotted, at 30°, 50°, 60°, and 65° C., and in buffers 0.5, 2.0, and 5.0 *M* in sodium chloride (and also 0.2 *M* in potassium chloride for 30° C.). In experiments with 5.0 *M* sodium chloride phenylacetic acid was "salted out" from the universal buffer; so it was replaced by acetic acid, which has almost the same dissociation constant.

In order to take account of the drift in the electrode systems, the electrodes were calibrated each day in a 0.5 *M* potassium acid phthalate solution at the temperature under investigation. The

Table I. Experimental Results

(Leeds & Northrup electrodes in 5.0 *M* sodium ion at 30° C.)

True pH	Mean Observed pH	L1 Correction	L2 Correction	Mean Correction
1.04	1.07	−0.03	−0.03	−0.03
1.36	1.40	−0.06	−0.02	−0.04
2.16	2.10	−0.01	+0.12	+0.06
3.87	3.88	−0.03	+0.02	−0.01
4.57	4.55	+0.01	+0.03	+0.02
5.16	5.12	+0.03	+0.05	+0.04
7.38	7.30	+0.06	+0.11	+0.08
9.03	8.72	+0.28	+0.34	+0.31
11.20	9.76	+1.40	+1.48	+1.44
		Check Run		
1.04	1.09	−0.05	−0.05	−0.05
1.36	1.41	−0.04	−0.07	−0.05
3.87	3.88	−0.01	−0.02	−0.01
7.38	7.31	+0.08	+0.07	+0.07
9.03	8.72	+0.31	+0.32	+0.31
11.55	9.79	+1.74	+1.79	+1.76

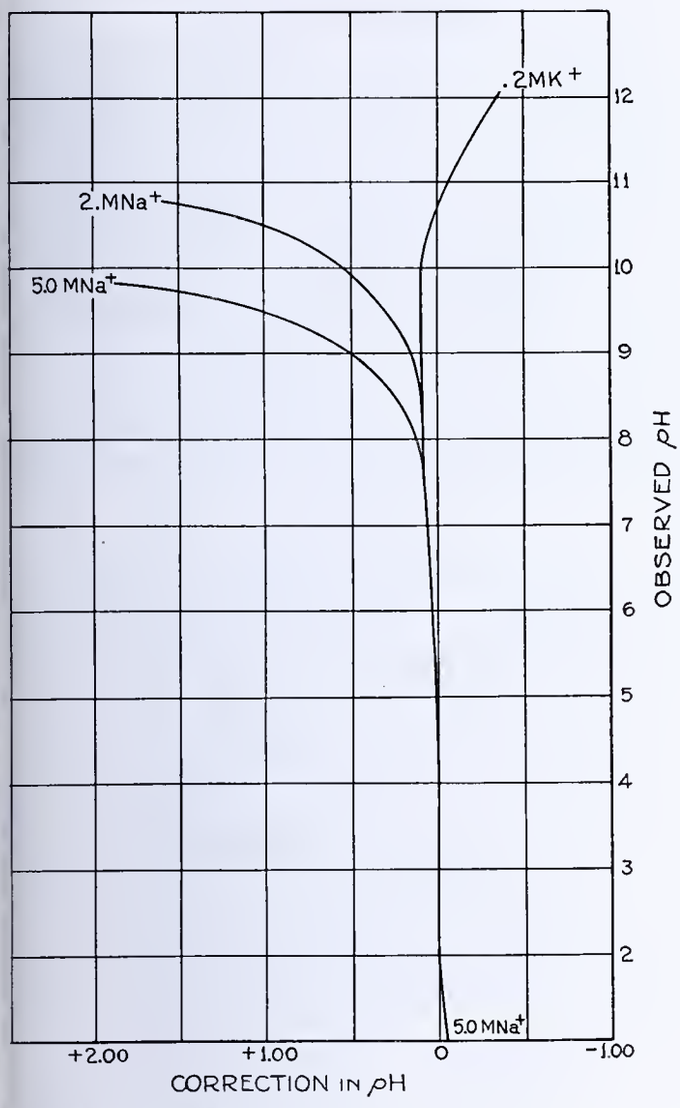

FIGURE 1. LEEDS & NORTHRUP ELECTRODE CORRECTIONS UNDER CONSTANT-TEMPERATURE CONDITIONS AT 30° C.

Add correction to observed pH as found from Leeds & Northrup tables or graph in Figure 6.

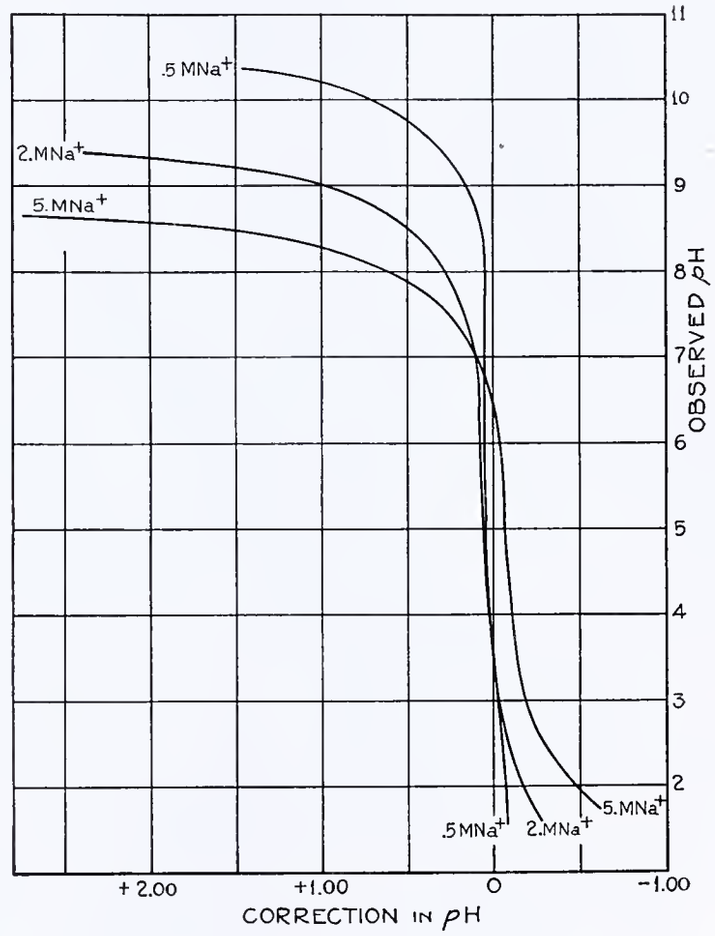

FIGURE 2. LEEDS & NORTHRUP ELECTRODE CORRECTIONS UNDER CONSTANT-TEMPERATURE CONDITIONS AT 50° C.

Add correction to observed pH as found from Leeds & Northrup tables or graph in Figure 6.

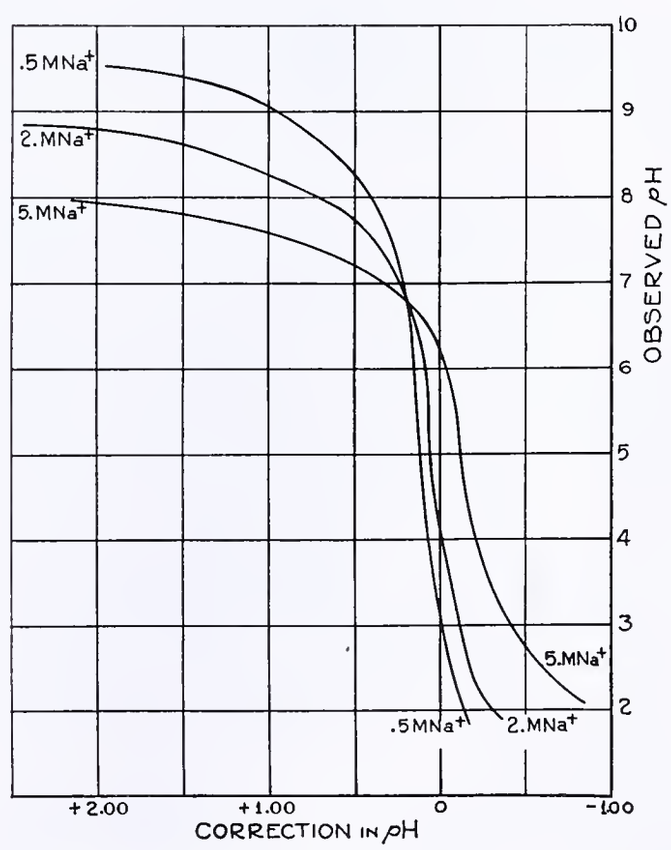

FIGURE 3. LEEDS & NORTHRUP ELECTRODE CORRECTIONS UNDER CONSTANT-TEMPERATURE CONDITIONS AT 60° C.

Add correction to observed pH as found from Leeds & Northrup tables or graph in Figure 6.

pH of this solution was 3.97 at 30° C., 4.00 at 50° C., and 4.02 at 60° and 65° C. The Coleman electrometer is adjustable, so that the dial would read correctly in the biphthalate solution. The potential of a Leeds & Northrup electrode was measured and converted to pH by means of a chart (Figure 6) based on Leeds & Northrup tables. Any difference between this and the correct pH was added to subsequent determinations. This method of calibration takes care of errors of the inner electrodes or the calomel half-cell. The temperature of the calomel half-cell is immaterial, so long as it is constant, because the thermal e. m. f. in the salt bridge was found to be reproducible.

Experimental Results

On account of the large number of readings involved it is not practical to present results in tabular form, but Table I is given in order to show the order of reproducibility to be expected.

Figures 1, 2, and 3 give the corrections for the Leeds & Northrup electrodes. Figures 4 and 5 give the corrections for the Coleman electrodes. Figure 6 is an extrapolation of the Leeds & Northrup conversion tables for the glass electrode. These graphs are constructed from averaged data, and individual electrodes may show small departures from them. Deviations up to 0.05 pH unit are not considered serious, since industrial requirements rarely exceed an accuracy of 0.1 pH unit. These correction curves apply only to measurements made after equilibrium has been reached. In some cases—e. g., 5.0 *M* sodium ions at 50° C.—initial equilibrium

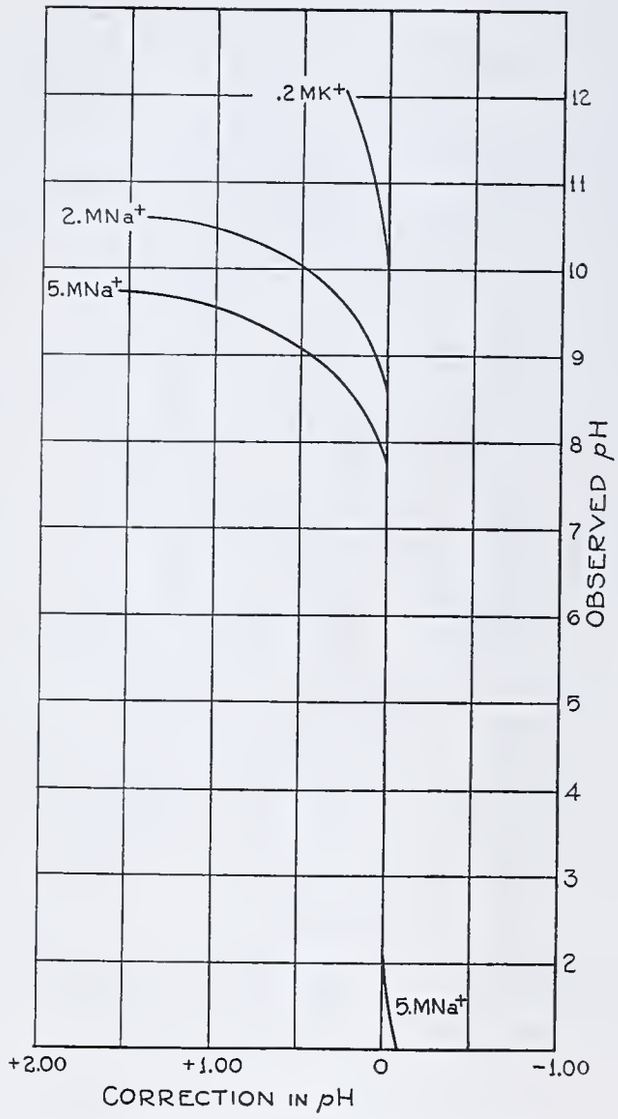

FIGURE 4. COLEMAN ELECTRODE CORRECTIONS UNDER CONSTANT-TEMPERATURE CONDITIONS AT 30° C.

Add correction to observed pH.

was not established in less than 3 hours, the observed pH rising by about 0.5 pH unit in this time. At room temperatures equilibrium was reached rapidly.

The manufacturers' literature on these electrodes states that measurements should not be attempted above 40° C., though no definite experimental reasons are given. The authors' finding was that the Coleman electrode fails rather badly at 60° C., especially in the alkaline range. The Leeds & Northrup electrodes begin to show poor reproducibility at 65° C., the more markedly at higher pH's. No curves were drawn for these cases, since they would be of slight significance.

The potassium-ion curve in Figure 1 has a negative slope because the conversion curves in Figure 6 are based on a solution 0.1 *N* in sodium ions. Since potassium ions give much smaller errors, we are overcorrecting when we use the curves. The true state of affairs is better shown by Figure 4, which does not involve conversions, since the Coleman dial reads directly in pH units.

The peculiar shape of the curves in Figure 5 is due to the fact that the Coleman dial is calibrated for room temperature, and hence an additional source of error is involved in measurements at 50° C. These curves apply only if the calibrating solution is about pH 4.00, as with the authors' biphthalate solution.

Discussion of Results

Perhaps the most surprising result of this work is the appearance of large deviations in the acid and neutral regions. Since most previous investigators confined themselves to relatively low concentrations of sodium ions and to room temperatures, the existence of deviations below pH 9 is not generally suspected. True, MacInnes and Belcher (*10*) had found deviations of the type shown here, but they were appreciable only in "superacid" solutions, in the region below zero pH and hence were considered of no general importance. As the authors' curves show, however, the effect is by no means peculiar to high acidities, but seems rather to depend on the ionic strength of the solution and its temperature. Curves in Figures 1, 2, and 3 show how this acid deviation barely appears at 30° C. for 5 *M* sodium chloride, then rapidly increases as the temperature rises.

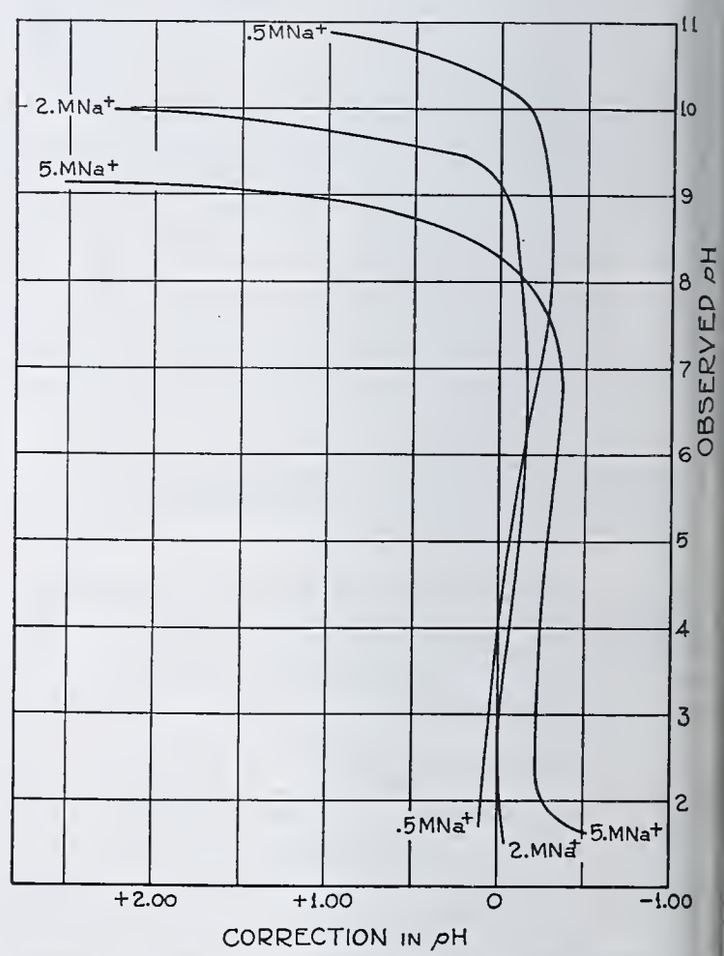

FIGURE 5. COLEMAN ELECTRODE CORRECTIONS UNDER CONSTANT-TEMPERATURE CONDITIONS AT 50° C.

Add correction to observed pH.

The alkaline errors have been recognized for several years but their rapid increase with temperature has apparently never been studied. At 60° C. the error begins about pH and the curves are so steep as to preclude any measurement above a true pH of 10. In all the cases studied (except 0.2 potassium) measurements above pH 12 were not practicable. This would seem to rule the glass electrode out of consideration as an instrument for use in highly alkaline solution. It was found that at pH 11.0 at 50° C. the potential of the glass was independent of the pH, but changed linearly with the pNa of the solution. Thus the hydrogen-electrode function of the glass is destroyed at a lower pH, the higher the temperature and the higher the sodium-ion concentration.

This work indicates the necessity for a greater number of correction curves. Although we have the corrections for

0.5 *M*, 2 *M*, and 5 *M* sodium we would have to guess the alkaline corrections if presented with a solution 1 *M* in sodium ions. Similarly, we could not apply an accurate correction to a 5 *M* sodium solution at 40° C., though we have data for 30° C. and for 50° C.

In brief, then, the use of the electrode at higher temperatures is beset with difficulties, and necessitates a rather exact knowledge of the amount and kind of cations present, as well as a large number of correction curves in order to cover all cases.

Theoretical

Although a variety of theories has been advanced in an attempt to explain the mechanism of the glass electrode, these all fall into two main classes:

1. Adsorption Theories. Schiller (*11*), Lengyel (*9*), Haugaard (*7*), and others have postulated a differential adsorption of ions at a solid-liquid boundary which causes a separation of charges and sets up a sort of condenser. This theory is not satisfactory because ionic migration through glass has been shown to take place and because the glass electrode is independent of the anions which would surely affect adsorption.

2. Distribution Theories. In this are included those models in which "potential-determining" ions are considered capable of crossing the glass boundary. Into this class fall the distribution theory of Haber (*6*), the semipermeable membrane theory of Cremer (*2*), the exchange adsorption theory of Horovitz (*8*), and the liquid-junction and quantum theory models of Dole.

All these have the advantage of lending themselves to rational thermodynamic treatment, and seem in many respects much more satisfactory than the rather vague adsorption theories. The general idea underlying them is that only those ions that can actually pass to and fro across the boundary play any part in determining the potential.

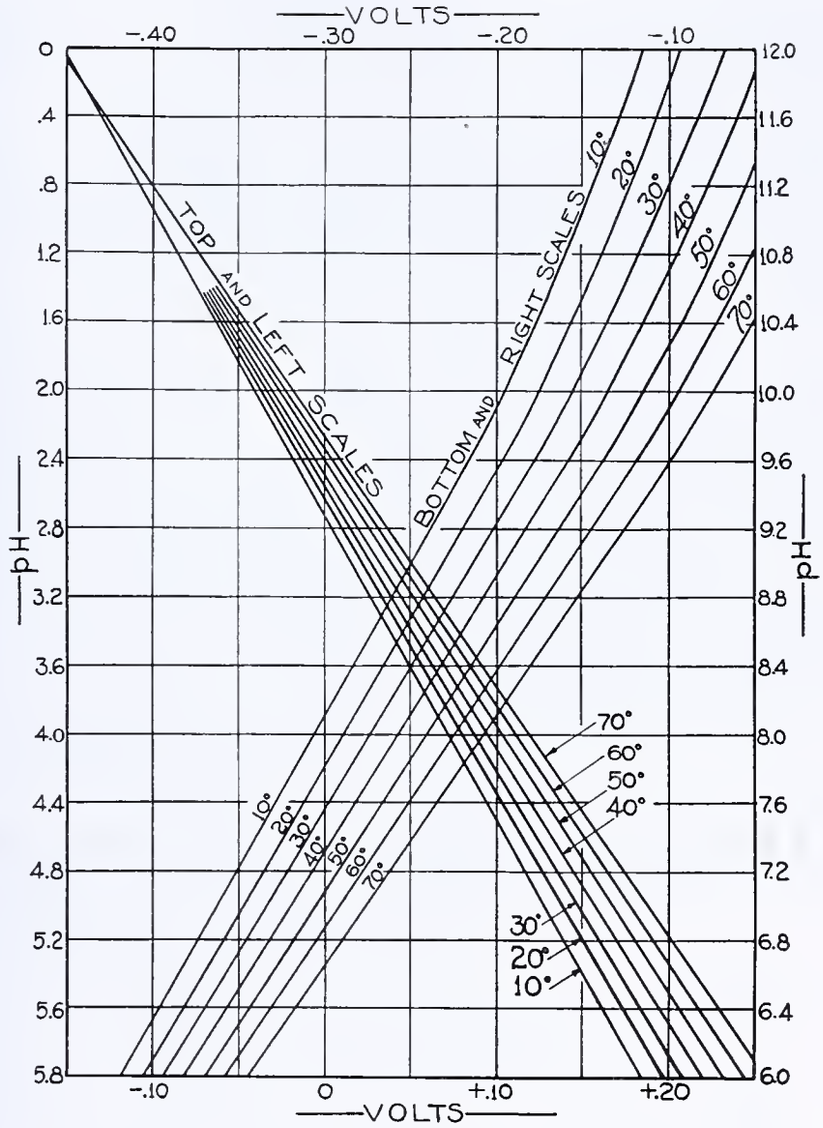

Figure 6. Conversion of Glass Electrode–Saturated Calomel Voltages to pH

Both electrodes at same temperature. When the calomel electrode is negative, the voltage is negative. Drawn and extrapolated from the pamphlet "Leeds & Northrup Standard 1203 2–1133."

A number of workers have attempted a mathematical treatment of the alkaline error of the glass electrode, but the present discussion is limited to Dole's results, since the others are similar in form.

Starting with the idea that the glass-electrode potential is due to the fact that certain ions (hydrogen and sodium) can pass from energy levels in the glass to other levels in the solution across a potential barrier, thus setting up a distribution potential, Dole (*5*) has applied statistical mechanics to the problem and found the following expression for the error of the glass electrode in alkaline solutions containing sodium ions:

$$E = \frac{RT}{F} \ln \frac{C_{H^+} + C_{Na^+} \cdot e^{\frac{-A}{RT}}}{C_{H^+}} \qquad (1)$$

where A was at first supposed to be a constant related to the energies of the lowest quantum levels of hydrogen or sodium ions on the glass surface.

Equation 1 may be rearranged into the form

$$\text{Log}\,(e^{\frac{FE}{RT}} - 1) = \log C_{Na} \cdot e^{\frac{-A}{RT}} + \text{pH} \qquad (2)$$

By plotting the left-hand side of this equation against pH, a straight line with unit slope should result. Dole (*4*) tested this for a number of solutions and found that the slopes of the lines were less than unity, so concluded that A is not a constant but depends on the pH. He also found that the slope of the lines varied with the Na^+-ion concentration.

Table II. Alkaline Error

NaCl Molarity	T ° C.	A	Slope
2.0	30	35340	0.552
5.0	30	29700	0.440
0.5	50	32500	0.533
2.0	50	33000	0.533
5.0	50	33800	0.533
0.5	60	21800	0.404
2.0	60	24270	0.404
3.0	60	24900	0.404

The authors have plotted their data from pH 7.5 to pH 11 for the Leeds & Northrup electrodes in this form and obtained straight lines. However, they found that the slope of the lines did not vary with the Na^+-ion concentration, but at 50° and 60° C. the slope was characteristic of the temperature. The values for A were not constant. This is shown in Table II.

It was hoped the Equation 2 could be used to calculate the temperature coefficient of the alkaline error. In Table II, the values for the slope and A appear to be characteristic of the temperature at 50° and 60° but show no agreement at 30° C. The authors tried to use the average of values of the slope and A to calculate the alkaline error at pH 10. The difference between the observed and calculated values was as

much as 0.9 pH unit. Therefore, Equation 2 cannot be accepted as a substitute for calibrating the glass electrode in the alkaline range.

The glass electrode errors in the acid and neutral regions have received but little attention. Dole (*4*) has attempted a mathematical analysis of this class of error. Assuming that the hydrogen ions passing through the wall are hydrated, in consequence of which the difference in the water activity on the two sides of the glass becomes a factor, he derives the equation

$$E = S\frac{RT}{F}\ln a_{H_2O} \qquad (3)$$

in which S is the hydration of the H^+ ion at 25° C. Dole found $S = 1$.

The authors have attempted to test this equation with their data. At 30° C., their results agree with Dole's for 25° C. For their other conditions they would have to assume that the hydration of the H^+ ion increased as the temperature increased, and as the Na^+ ion and H^+ ion decreased. An independent measurement of the hydration of the H^+ ion would be required to test this equation further.

They therefore conclude that the errors of the glass electrode cannot yet be calculated with sufficient precision for all ranges within which the glass electrode is a useful tool.

Acknowledgment

The authors are indebted to Malcolm Dole for helpful suggestions in the early stages of the preparation of the manuscript.

Literature Cited

(1) Britton, H. T. S., and Robinson, R. A., *J. Chem. Soc.*, 1931, 458.
(2) Cremer, M., *Z. Biol.*, 47, 562 (1906).
(3) Dole, M., *J. Am. Chem. Soc.*, 53, 4260 (1931).
(4) *Ibid.*, 54, 3095 (1932).
(5) Dole, M., *J. Chem. Phys.*, 2, 862 (1934).
(6) Haber, F., and Klemensiewicz, Z., *Z. physik. Chem.*, 67, 385 (1909).
(7) Haugaard, G., *Ibid.*, 160, 279 (1932).
(8) Horovitz, K., *Z. Physik*, 15, 369 (1923).
(9) Lengyel, B., *Z. physik. Chem.*, 154, 371 (1931).
(10) MacInnes, D. A., and Belcher, D., *J. Am. Chem. Soc.*, 53, 3315 (1931).
(11) Schiller, H., *Ann. Physik*, 74, 105 (1924).

RECEIVED February 10, 1937.

Determination of Free Carbon in Rubber Goods

E. W. OLDHAM AND J. G. HARRISON, JR., Firestone Tire and Rubber Company, Akron, Ohio

A survey of the methods proposed for carbon black determination shows that the nitric acid decomposition of the rubber sample is the simplest method and accurate enough for technical purposes.

The following improvements upon this method are recommended: decreasing the size of the sample; omitting the preliminary extraction of the sample; using an intermediate wash of acetic acid, acetone, and chloroform between the nitric acid and acetone and chloroform; and correcting the results when clay is present.

THIS paper is presented with the aim of rendering more accurate and simple the difficult analytical determination of carbon black in rubber.

A survey of the methods proposed for this determination reveals that they are not as short, easy, or accurate as might be desired. Smith and Epstein (*5*) have discussed what is probably the most widely used method, nitric acid decomposition of the rubber sample. In its essentials, this is the method recommended to the AMERICAN CHEMICAL SOCIETY in 1922 by the Committee on Methods of Analysis of the Rubber Division (*1*), and was recommended (*6*) to German chemists with the variation of making the filtration through hardened filter paper. Another variation, recommended by the Research Association of British Rubber Manufacturers (*2*), calls for filtration through a thick layer of kieselguhr, using carbon tetrachloride in the nitric acid. In addition, two unique methods have been recommended (*4*), which call, respectively, for decomposition of the sample in hot molten paraffin with subsequent centrifuging of benzene and ether solutions and for distillation of the rubber in an atmosphere of nitrogen. The consensus of opinion seems to be that the nitric acid decomposition is the simplest method and accurate enough for technical purposes. This paper will be confined to improvements upon this method.

Procedure

Weigh samples of such size that the amount of carbon black does not greatly exceed 75 mg. and place in a 250-cc. beaker. Add 10 to 15 cc. of concentrated nitric acid and allow to stand at approximately 60° C. until the rubber is disintegrated. Add 50 cc. more of concentrated nitric acid, taking care to wash down the sides of the beaker, and heat on the steam bath for 1 hour. Filter before it is cool with moderate suction through ignited Gooch crucibles having a medium layer of asbestos, and wash well with hot concentrated nitric acid. It is essential that all the black be rinsed from the beaker at this stage. Turn off the suction when the carbon in the crucible is still covered with a small amount of the last nitric acid wash.

Empty the filter flask (this is important), pour into the crucible a hot mixture of equal parts of acetic acid, acetone, and chloroform, and continue the filtration. Wash the black with a warm 50–50 mixture of acetone and chloroform until the filtrate is colorless. Wash with hot 10 per cent sodium hydroxide until three washings have come through colorless. Wash three times with 15 per cent by volume of hot hydrochloric acid and once with 5 per cent by volume of warm hydrochloric acid. Remove the crucibles and clean the outside with a cloth moistened with the acetone-chloroform mixture. Dry in the 110° C. oven for 2 hours. Cool in a desiccator and weigh rapidly. Burn off the carbon and reweigh. The difference in weight, corrected for clay if present, represents approximately 105 per cent of the carbon black originally present. To obtain the correction factor for clay, multiply the amount of clay present in the sample by 14 per cent, or multiply the sum of SiO_2 and R_2O_3 weights in the sample by 16.3 per cent, and subtract this figure from the total ignition loss.

It seems to be important that the carbon black should not dry during filtration. Drying in the nitric acid wash seems

pack the layer of carbon and thus slow the filtration. nall particles of black will not be retained on the filter if e nitric acid is completely filtered through before the addi- on of the acetone–acetic acid–chloroform mixture. Dry- g of the black during the later washings seems to have no ect beyond reducing the effectiveness of the wash solutions.

Discussion

It has been the authors' experience that when more than mg. of carbon black are to be filtered from a nitrated rub- r solution, the filtration usually becomes extremely slow. ubber goods, as, for instance, tread stocks (*3*), now contain creased amounts of carbon black as compared with those ed when the nitric acid method was first devised. There- re, in the analysis of stocks containing over 15 per cent ack, the authors recommend the use of a sample smaller an the 0.5 gram originally specified. For rapid determi- tions on tread stocks containing in the neighborhood of 30 r cent black, the sample size should not exceed 0.25 gram.

The standard practice of extracting samples with acetone d chloroform is unnecessary. This is shown by analyses the same tread stock extracted and not extracted:

	Carbon Black %		Carbon Black %
Extracted sample	31.28	Unextracted sample	31.28
	31.12		31.32
	31.72		31.28

In the change of wash solutions from hot nitric acid to etone and chloroform, small particles of black are fre- ently lost, acetone having a more detrimental effect than e mixture of acetone and chloroform. Whether this diffi- lty is encountered because of the wetting tendency of ace- ne or because of the charge upon the particles is not known. he authors' experiments have shown that an intermediate ash of equal parts of acetone, chloroform, and acetic acid s less tendency to disperse the black than immediate wash- g with either acetone or acetone and chloroform, as rec- mmended in prior methods.

A common type of rubber stock for mechanical goods is a rbon black–clay mix. Clays have an ignition loss and ive too high a value to the carbon black determination of ch a stock. The Committee on Methods of Analysis of e Rubber Division of the American Chemical Society has ecommended (*1*) treating the clay residue with sodium hy- roxide. The authors have found that such treatment is futile. n analysis of an average clay showed that 85 per cent was soluble in alkali, and the component showing ignition loss as the insoluble portion. Since they know of no way to emove this insoluble clay prior to the ignition, it is fortunate at the ignition loss for practically all silicates used in the ubber industry is in the neighborhood of 14 per cent, and correction factor can therefore be applied. Knowing the mount of clay in the sample, we can subtract 14 per cent of is value from the ignition loss. If the original clay content not known, we can subtract from the ignition loss 16.3 per ent of the sum of SiO_2 and R_2O_3 weights in the sample. The uthors recommend this method of correction as fairly ac- urate. The correction so applied may amount to 2 or 3 per ent. Slight differences in composition of clays will affect he correction factor only to a small degree.

Washing the black with sodium hydroxide is still necessary, owever, to remove part of the mineral rubber not removed y nitric acid or acetone and chloroform, as well as other aterial adsorbed from the nitric acid solution of the rubber ample. Analyses were made of the following stocks by the ethod here recommended; analyses were also made by the ame method, omitting only the sodium hydroxide and sub- equent washes.

	Without NaOH Wash %	With NaOH Wash %		Without NaOH Wash %	With NaOH Wash %
30% black	31.16	30.84	30% black,	33.28	30.72
	31.04	30.48	10% mineral rubber	33.68	30.24

The reaction product of nitric acid upon carbon black is probably some stable form of graphitic acid (*5*). It cannot be reduced by formaldehyde. Smith and Epstein have stated (*5*) that carbon black is recovered from nitric acid in an amount approaching 105 per cent of the original weight. The authors have found that unless washed with water or sodium hydroxide, the reaction product will have approximately a 2 per cent higher weight. They do not, however, recommend washing with water, since sodium hydroxide serves the same purpose and does not have water's tendency to cause loss of the black in filtration. The water-soluble portion of this oxidation product is believed to be gases adsorbed from the nitric acid. These must be washed out.

The authors have found in a large number of determinations of carbon black in rubber by the nitric acid decomposition method that the results were slightly higher than the theoretical 105 per cent, and that carbon black does not gain weight when treated with hydrochloric or acetic acids and then dried. The higher results are therefore not due to adsorbed hydrochloric or acetic acids, but may be attributed to the difficulty of freeing the carbon particles from adsorbed material contained in the average rubber mix.

It has been the authors' experience that the results vary but little whether the nitric acid solution of rubber is filtered immediately or allowed to cool. Allowing the black to settle apparently does not hasten the filtration; therefore, filtration is recommended while the solution is at least warm.

Although lead is rarely used today in the compounding of rubber, it must be removed if present (*1*). A negligible error is caused by the presence of barium and calcium sulfates.

Summary

The carbon black analysis should not be made without a consideration of the nature of the original stock. The size of the sample must be related to the black content. To lessen time consumed in this analysis, preliminary extraction of the sample should be omitted. The correction factor for clay must be applied. By the revised method greater accuracy is obtained, although there is still a tendency for the results to be higher than calculated. Precision in this method seems to depend mainly upon accuracy of weighing and avoiding the loss of small particles of black.

Acknowledgment

The authors gratefully acknowledge the permission of The Firestone Tire and Rubber Company to publish this paper. They wish to thank the Physical Testing and Research Departments of the Firestone Company and L. M. Baker for their kind assistance.

Literature Cited

(1) Am. Chem. Soc., Committee on Methods of Analysis, Rubber Division, Ind. Eng. Chem., **15**, 308 (1923).
(2) Dawson, T. R., and Porritt, B. D., "Rubber: Physical and Chemical Properties," p. 535, Croyden, England, Research Association of British Rubber Manufacturers, 1935.
(3) Park, C. R., Ind. Eng. Chem., News Ed., **11**, 343–6 (1933).
(4) "R", *Gummi-Ztg.*, **50**, 178 (1936).
(5) Smith, A. H., and Epstein, S. W., J. Ind. Eng. Chem., **11**, 33–6 (1919).
(6) Zilchert, P., *Gummi-Ztg.*, **50**, 778 (1936).

Received April 17, 1937. Presented before the Division of Rubber Chemistry at the 93rd Meeting of the American Chemical Society, Chapel Hill, N. C., April 12 to 15, 1937.

Apparatus for Precise Plasticity Measurements at High Temperatures

Data on Coal Plasticity

H. K. GRIFFIN AND H. H. STORCH, Pittsburgh Experiment Station, U. S. Bureau of Mines, Pittsburgh, Pa.

An instrument for precise measurements of plasticity at elevated temperatures is described. Adequate apparatus is included for avoiding eccentric loading.

Measurements made on Pittsburgh and Alma seam coals show that the truly plastic properties of these coals are very transient, the life period being of the order of 1 minute at 460° C. Measurements of deformations proportional to the load were obtained at 410° C. An analysis of these data indicates that the deformations are elastic rather than plastic in character. Measurements on the deformation of the solid plus oily bitumen (obtained by benzene extraction) of Pittsburgh seam coal at 120° C. show that this is a truly plastic material.

THE rheologists' concept called plasticity has certain close analogies to the viscosity, or more accurately, to the fluidity (the reciprocal of viscosity) of liquids. It is common knowledge that a liquid yields permanently under a shearing stress, no matter how small, and that the yielding increases linearly with increasing shearing stress. The coefficient of viscosity is by definition the ratio of shearing stress to rate of shear; or the fluidity, a term which perhaps conveys to the mind a more concrete picture of the consistency of the liquid, is the rate of shear per unit shearing stress. It is constant, so long as the conditions tacitly involved in its definition are fulfilled, for any one liquid at a given temperature, regardless of the rate of shear. If, for the case of a liquid, a plot be constructed of the rate of shear against shearing stress or quantities proportional thereto, respectively—as, for example, the volume rate of flow against the pressure for liquid flow through a capillary tube—the result will be a straight line through the origin, the slope of which is by definition the viscosity of the liquid.

Certain materials, some of which appear to be liquids and others definitely solids, behave in a fashion exactly similar to liquids in all respects except one—namely, that no permanent shear results until the shearing stress surpasses a certain value, which varies from one material to another. For shearing stresses greater than that required to start permanent shear, the rate of shear is proportional to the excess of pressure over the threshold value. For such materials the flow-pressure diagram, in the case where the stress distribution is uniform throughout the volume of material under stress, is a straight line intersecting the pressure axis at some positive value. The slope of such a line is a measure of the plasticity of the substance being tested. Plasticity is therefore analogous to the fluidity of a viscous liquid; dimensionally it is identical with it.

Very few plastic solids behave precisely in accordance with this description of plasticity. Nevertheless the definition given above has been found useful and sufficient to specify the behavior of plastic materials.

Coal "Plasticity"

When certain bituminous coals, particularly coking coals are heated in the absence of air, some of the components of the coal soften or become incipiently or completely molten. The mass of coal as a whole becomes so soft that it is capable of being deformed under load. Such behavior is believed to be essential for coke formation. In the coke oven the pressure of the overburden probably aids the softened individual lumps to flow together, while the evolution of gases tends to knead the mass into a more or less homogeneous whole.

American coking coals are reported to be "plastic" within the temperature interval 375° to 475° C. Close to the latter temperature the coal hardens rapidly, so that it can no longer be readily deformed; and in commercial practice, heating is continued to various higher temperatures, up to perhaps 1100° C., depending upon the use for which the coke is designed.

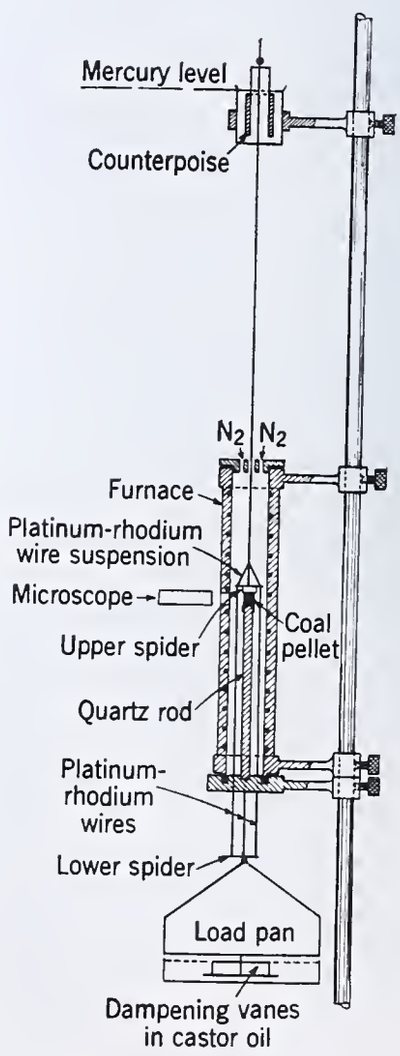

FIGURE 1. DIAGRAM OF PLASTOMETER ASSEMBLY

A considerable number of investigators have made laboratory studies of the (so-called) plastic characteristics of American coals (see literature cited by Brewer and Atkinson, *1*). However little work has been done by methods such that the magnitude and distribution of the shearing stresses in the coal specimen were known. A notable exception is the work (in England) of Seyler (*2*, *3*), who used specimens in the form of cylinders 6.1 mm. in diameter and 20 mm. in length made by briquetting powdered coal. The cylinders were loaded uniformly across the section, and the plasticity was measured by the time rate of deformation (decrease in length) under the applied load when the specimens were brought rapidly to predetermined temperatures.

Because an absolute method often yields more information than methods involving other variables, and because it

was, judging by Seyler's (*2, 3*) work, possible to obtain reproducible and precise measurements of the response of such coal specimens to known shearing stresses, it was considered desirable to study some American coals by a similar method. The apparatus used by Seyler, while correct in principle, does not preclude the possibility of eccentric loading. The authors' loading device (described below) was designed to eliminate such eccentricity.

Description of Plastometer

In most previous work on coal plasticity it has been the practice to heat the specimen at some predetermined temperature rate, more or less simulating those commonly used in coke-oven practice. Because of certain known variables in the problem, in particular, change in the consistency of the coal with time, at constant temperature, and the obvious effect of temperature gradients in the specimen if the consistency is a rapidly changing function of the temperature, it was considered desirable to provide as well for what is termed "instantaneous" heating of the specimen, thus minimizing the effect of both variables mentioned. This was accomplished by bringing the furnace to a predetermined temperature, with the loaded specimen exterior thereto, then dropping the furnace instantaneously over the specimen.

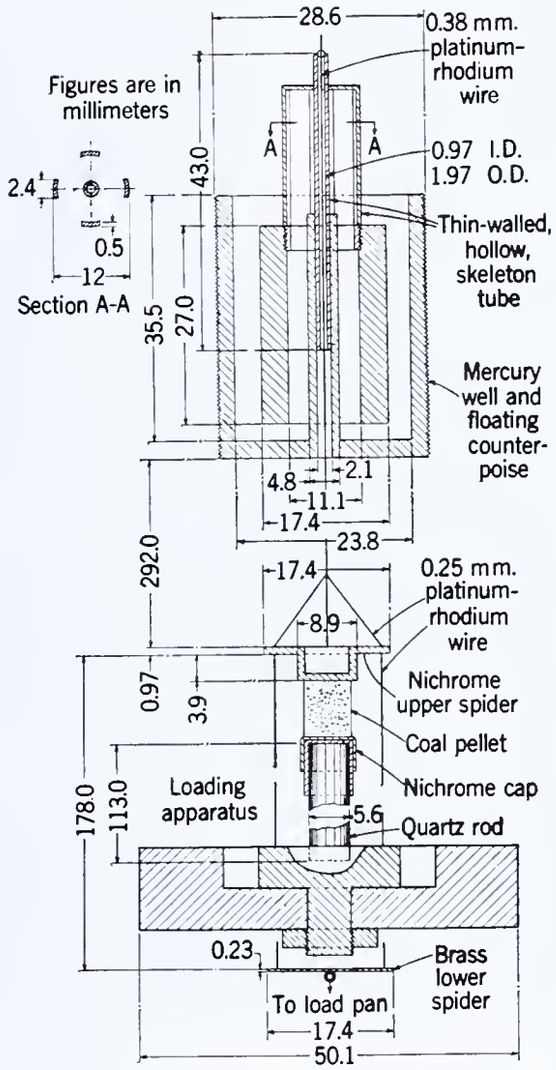

FIGURE 2. DETAILED DRAWING

A diagram of the complete assembly of the plastometer drawn to scale, a detailed drawing with dimensions, and a photograph of the entire apparatus are given in Figures 1, 2, and 3.

The large (19-mm.) rod of a heavy workshop microscope stand was fitted with a heavy brass arm which carried at its outer end a brass disk of the required geometry and dimensions. The coal specimen rested on the top of a silica post, rising from the center of the brass disk. Metal pieces were attached to each end of the silica post by means of a refractory cement. The piece on the lower end carried a relatively wide flange, and a thread on the exterior portion below such flange. The threaded portion passed through a neat-fitting hole in the disk of the post support arm and was held in position by a nut below the disk. The upper metal piece was plain cylindrical on the exterior, to take neat-fitting caps, counterbored on their top faces, to various diameters, and to a depth of 0.39 mm., thus providing for accurate centering of specimens of several diameters. The top metal piece and caps were made of 18–8 chromium-nickel alloy. Final machine cuts on the metal pieces were made after they were cemented to the quartz post, with the whole running between centers on a precision lathe. Accordingly, the perfection of alignment of the parts constituting the supporting post was limited only by the accuracy of the lathe.

The literature supplied little information regarding the pressures likely to be required to produce measurable deformation rates under the proposed conditions. In fact, the sole example was the work of Seyler (*2, 3*) who obtained sizable apparent deformations under pressures of a fraction of a gram per square centimeter. Accordingly, the authors' apparatus was designed to eliminate to a high degree all forces on the specimen other than that of the net load to be applied. Also, because an eccentric load, very small in absolute value, would, because of the small size of specimen, cause large variations in the lateral distribution of shearing stress, provision was made to center the load very accurately.

Although, because of the high pressures found necessary during the experiments, the refinements used to minimize undesired forces were not essential for the work on coal, they were found to function satisfactorily and hence may merit description because they were useful in the experiments on coal bitumens; and will probably be of interest to experimenters in measuring deformations of highly plastic materials.

The loading arrangement comprised (1) the loading system proper and (2) a device for counterbalancing the entire arrangement.

The loading arrangement consisted of a nickel-chromium "spider," in the form of a thin disk and short concentric cylinder, the two being turned integrally from one piece of metal. This spider was arranged for placement on top of the coal specimen, the cylindrical portion being in contact with the coal. Three No. 70 holes were drilled through the disk portion of the spider at equal angular distances of 120°; they were each given a slight (but accurately the same for each) countersink on the upper side of the disk.

A platinum-rhodium (20 per cent rhodium) wire with a spherical bead on its upper end was passed through each of the three holes in this upper spider. The beads were formed, all to the same diameter, by fusing the requisite length of the wire. Resting in the countersinks, they centered the wires in the holes and carried the load. After the wires were passed through the upper spider similar beads were formed on the lower ends of the wires. The three wires were then brought to the same length by stretching the necessary ones the correct amount.

The beads on the lower ends of the wires supported a lower spider similar to the one resting on the specimen, except that it was a plain disk only, and the countersinking of the holes was done on the lower face. Also, to permit placing the wires in the holes of the lower spider after the lower beads were made, a cut with a fine jeweler's saw was made from the edge of the spider into the respective holes.

A loading pan was suspended from the bottom of the lower spider, at its mid-point. To prevent appreciable shift of the center of gravity of the loading system on change of weight on the load pan, the joint between scale pan and spider was a flexible one of minimum friction, and the load pan was recessed for the various weights in such fashion, that weights were always distributed symmetrically about the axis of the loading system.

The counterbalancing device comprised a steel well containing mercury and a steel float immersed therein, together with arrangements for guiding the float accurately in one line and means for attaching it to the loading system.

A drilled and reamed post was attached to the base of the well as its mid-point and passed throughout the well length. The float was in the form of a hollow, thick-walled cylinder of suitable dimensions attached to and guided by a polished hollow rod of such diameter as to move up and down in the hollow post of the well with a minimum of friction and play. Attachment between the float and its guide was a skeleton one made by cutting away as much as was allowable of the thin-walled hollow cylinder from which it was constructed. A cross section of this skeleton cylinder is given in Figure 2, which shows the dimensions of the various parts of the apparatus.

The mercury well was arranged to screw up or down in a tight-fitting thread, permitting the use of specimens of various lengths and complete immersion at all times of the thick-walled portion of the float, which was attached to the upper spider by a platinum-rhodium wire. A spherical bead formed on the upper end of such wire rested in a slight countersink in the upper end of the hollow rod attached to the float. At the lower end the wire was fused to a tripod, also made of platinum-rhodium wire, the three legs of which were in turn fastened to the upper spider at points 120° apart near its circumference. Such attachment was done, as previously described, by wires with spherical beads on the ends passing through the holes in the spider, the beads resting in slight countersinks. Final adjustment of the three legs of the tripod to equal length again was made by stretching the wires slightly.

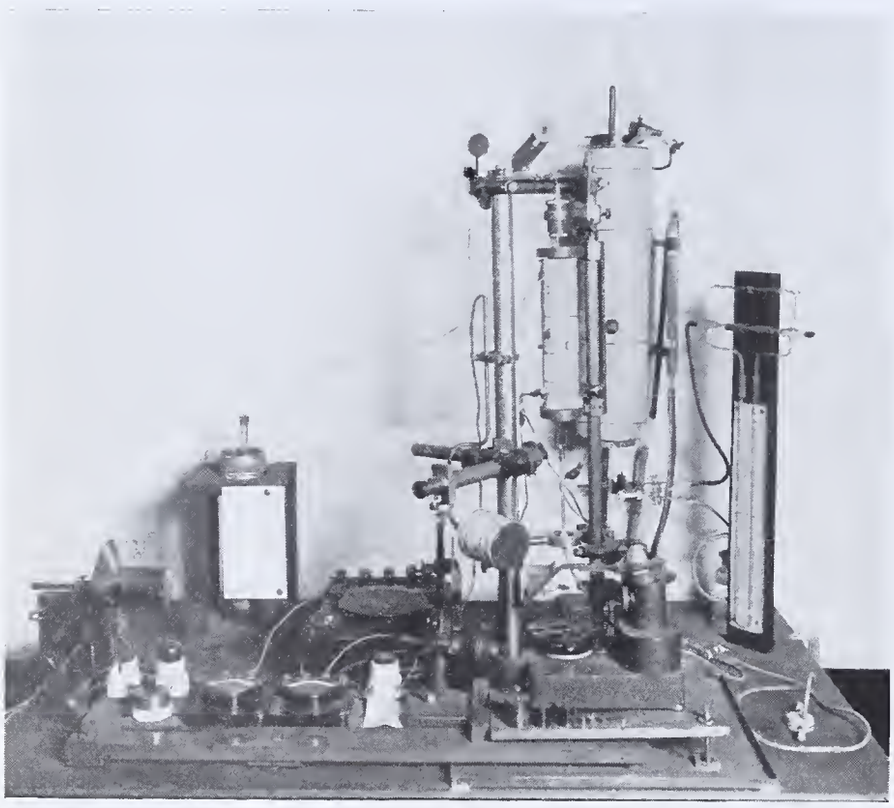

Figure 3. Photograph of Apparatus

Obviously, the counterbalance wire and the three load wires had to pass through the top and bottom of the furnace, respectively. The former passed through a No. 50 hole drilled through the transite piece closing the top of the furnace. The brass disk of the post support arm formed the bottom closure of the furnace, and the three load pan wires passed through No. 56 holes drilled through the disk. In order to avoid friction and interference with alignment of the loading arrangement with the specimen, it was necessary for all wires to pass free through the holes. Accordingly provision was made for removing any torsion from the counterbalance wire after assembly by arranging to turn the rod of the counterbalance float to the required azimuth, with a simple friction device to hold the adjustment.

It is apparent that the entire loading apparatus was suspended from the bead on the platinum-rhodium wire resting on the guide tube of the steel float in the mercury well. Since this arrangement formed a perfectly good pendulum, suitable dampening vanes immersed in castor oil were attached to the under side of the loading pan. Before loading a pellet, the lower surface of the upper spider was brought very close to, but not in contact with, the upper surface of the pellet by raising or lowering the mercury well, using the fine screw thread on the outside of the well for this adjustment. Since the mercury level was always kept above the heavy-walled portion of the float, and since the skeleton tube of the float displaced only 0.007 cc. per mm. of immersion, this counterpoise system was very sensitive, and was found to be accurate to ±0.02 gram.

The load placed on the pan was transmitted to the pellet by the upper spider through the three platinum-rhodium wires attached to the upper and lower spiders. Any deformation of the pellet would result in a greater immersion of the skeleton tube of the mercury float. This increased immersion was measured by a millimeter scale etched on one leg of the skeleton tube. In most of the experiments described in this paper the maximum deformation was less than 1 mm., and hence the correction to be applied to the apparent load was less than 0.035 gram. This correction was negligible for the high loads necessary for the deformation of the coal pellets, but was of significance in the measurement of the plasticity of the coal bitumens.

The general appearance of the apparatus may be seen in Figure 3. The two pulleys near the top of this picture were used to conduct a light cord attached to the platinum-rhodium wire above the counterpoise attachment; this cord was used to support the loading apparatus when the latter was not in use. For measurement of the deformations, the top of the pellet was sighted through a 3 × 10 mm. hole in the furnace wall, using a low-power microscope with a micrometer eyepiece. The top closure of the furnace is observable at the extreme right of the photograph. To it is attached a tube for leading into the furnace the oxygen-free nitrogen. The large furnace behind the plastometer was used to heat a mass of copper turnings to 500° C., so as to remove traces of oxygen from the nitrogen gas.

Slow Heating

Effect of Load on Maximum Expansion and Initial Contraction Temperature. In all the experiments reported in this paper the coal specimen was cylindrical, 7.5 mm. in length and 6.4 mm. in diameter. These pellets were formed by compressing the powdered (−200-mesh) coal in a mold kept at 300° C., to a pressure of 7050 kg. per sq. cm. (100,000 pounds per sq. inch). Apparent densities computed from the dimensions and weight of the specimens varied from 1.27 to 1.29.

Figure 4 summarizes experiments in which the heating schedule was about 7° C. per minute up to 350° C. and about 1° C. per minute thereafter. The pellets were loaded before the heating was begun, and the same load was maintained throughout the experiment. A stream of oxygen-free nitrogen gas was passed through the furnace during all experiments. The coal used was a mixture of 80 per cent of Pittsburgh seam, Warden coal, and 20 per cent of Summerlee, Sewell bed coal, and was designated as coal 30 in the U. S. Bureau of Mines investigation of gas-, coke-, and by-product-making properties of American coals.

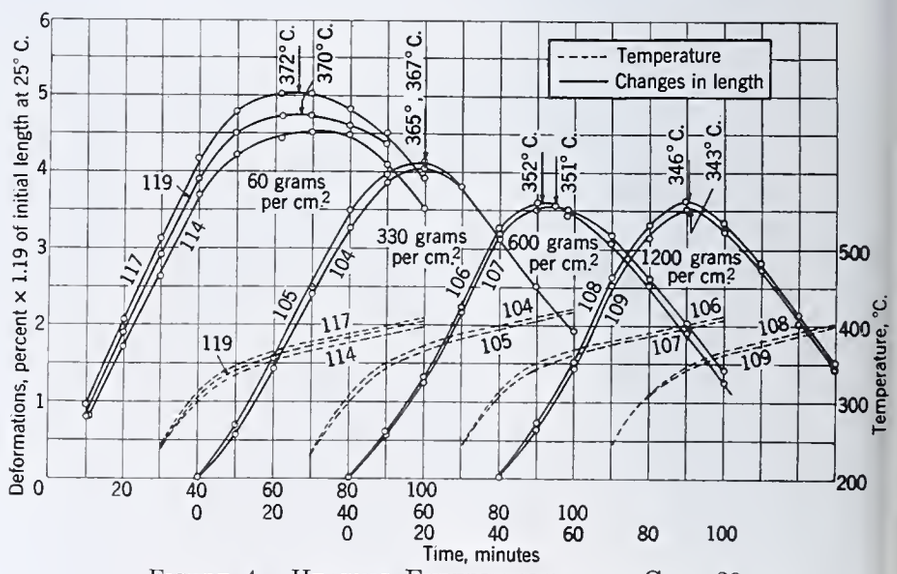

Figure 4. Heating Experiments with Coal 30

Length measurements and emperature readings were nade once per minute, but nly the 10-minute points are hown in Figure 4. The most triking facts about the curves re: (1) The temperature of nitial contraction decreases vith increasing load. (2) The naximum increase in length lecreases with increasing load p to 600 grams per sq. cm. nd appears to be independent f loads greater than 600 rams per sq. cm. (3) The lope of the time *vs.* changes n length curves before and fter the maximum length as been reached is about the ame for all loads.

Thermal expansion causes ncrease in length until the plastic" range is reached. ubsequently thermal expansion is accompanied by contraction due to filling of voids and to shrinkage due to structural changes accompanying chemical decomposition. The ecrease in maximum expansion with load may be due to n increased rate of filling of voids by closer packing of etted grains of solid material. Beyond about 600 grams er sq. cm. the frictional resistance accompanying such closer acking may become sufficiently great to make further deformation almost independent of load.

The approximate equality of the slopes of the curves immediately before and after maximum length has been reached hows that continuous deformation proportional to load does ot exist under the conditions of these experiments.

Since the pellets were restrained by metal caps, it appeared ossible that the effect of load on the initial contraction temperature might be caused by better thermal contact with increasing load, with a resultant decrease in such temperature gradient as might exist in the coal pellet. To vary this experimental condition within wide limits, accurately ground cylinders of Pyrex glass, approximately 4.7 mm. thick, were placed above and below the coal pellet in the plastometer. The effect of load was quantitatively the same for either arrangement. With coal specimens between metal caps the initial contraction temperatures were 371°, 366°, 351°, and 344° C. for pressures of 60, 330, 600, and 1200 grams per sq. cm., respectively. With the Pyrex cylinders inserted the temperatures were 368° and 341° C. for respective pressures of 60 and 1200 grams per sq. cm.

In a few cases the temperature gradient across the diameter of the pellet was directly measured by inserting a thermocouple in a fine hole drilled along the axis of the cylindrical specimen. This gradient for the slow heating schedule was never greater than 2° C. and averaged closer to 1° C. For the rapid heating schedule (described below) the gradient was about 10° C. during the first 2 minutes, after which it dropped rapidly to 1° to 2° C.

To obtain larger deformations and to measure these at constant temperature, a large number of experiments were made in which the specimen was heated very rapidly to 410° C. and measurements were made at that temperature.

Table I. Deformation Rates at 410° C.

Coal No.	Experiment Nos.	Load	Time	Maximum Expansion Per cent (× 1.19) of initial length at 25° C.	Deformations per Minute for Stated Time Intervals after Maximum Length Is Reached (in Per Cent, × 1.33[a] of Maximum Length at 410° C. and Zero Load) As Observed 2 min.	As Observed 10 min.	As Observed 20 min.	Corrected for Change in Maximum Expansion with Load 2 min.	Corrected 10 min.	Corrected 20 min.
		G./sq. cm.	*Min.*							
16	173–176	0	6.0	13.8	0.100	0.075	0.061	0.10	0.075	0.061
16	170–171	330	4.0	7.75	0.380	0.239	0.156	2.68	0.700	0.385
16	177–178	720	3.5	6.10	0.600	0.385	0.280	2.90	0.960	0.568
16	283–284, 287–288	1200	3.0	7.10	0.780	0.625	0.370	3.08	1.32	0.715
16	274–279	1800	2.5	6.06	1.00	0.708	0.435	3.30	1.51	0.837
16	252–256, 264–265	2400	2.25	4.66	1.43	0.975	0.543	3.73	1.84	0.975
16	259, 296–300	3000	2.25	4.85	1.68	1.17	0.709	3.98	2.04	1.14
16	280–282, 292–295	3600	2.25	4.97	1.80	1.23	0.738	4.10	2.10	1.17
30	151	330	4.0	8.05	0.300	0.150	0.091	2.60	0.610	0.320
30	148	600	4.0	7.55	0.360	0.168	0.198	2.66	0.630	0.380
30	149	1200	4.0	6.76	0.600	0.377	0.234	2.96	0.860	0.480

[a] All the coal pellets used in the experiments of Table I were of the same length—namely, 7.5 mm. or 119 turns of the micrometer screw on the eyepiece. The units used for all deformations of Table I are in turns of this screw. For conversion to per cent of the initial length at 25° C. the figures given must be divided by 1.19. For conversion to per cent of maximum length at 410° C. and zero load the deformations must be divided by 1.33.

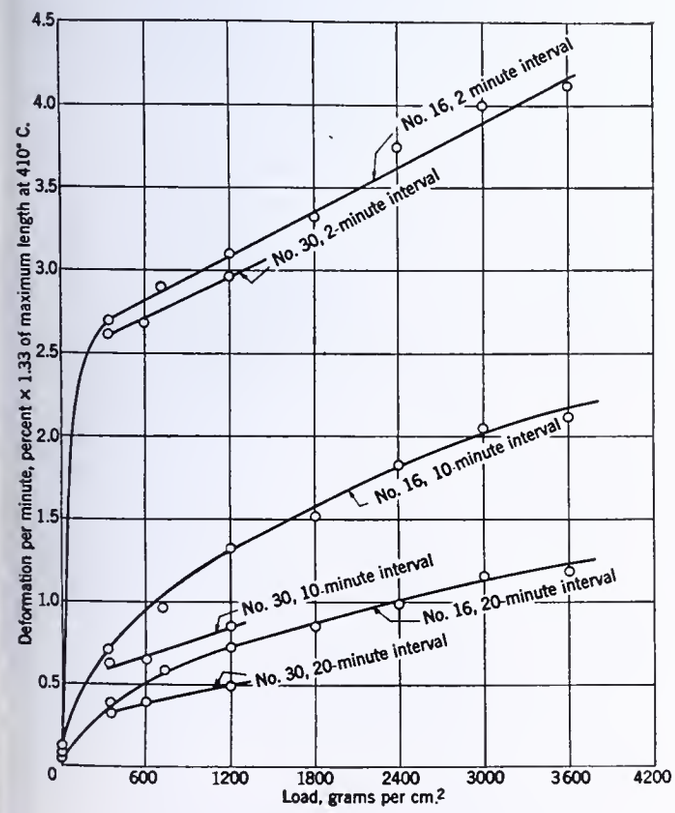

Figure 5. Deformation Rates at 410° C.

Coals 16 and 30 plus 20 per cent electrode carbon

Rapid Heating

Deformations Proportional to Load. In a large number of preliminary experiments in which the loaded pellet was rapidly (within 3 to 4 minutes) heated to temperatures of 410° to 475° C. it was found that when plastic deformation occurred it was almost always too fast to be measurable, the loaded coal pellet being squashed out of range of the microscope in a few seconds after the maximum temperature was reached. The final thickness of the material remaining between the loading caps was apparently limited only by the downward distance which the movable upper cap was free to travel. When it was sought to avoid this very rapid deformation by using much smaller loads, measurements were made impossible by swelling and irregular distortion due to gas evolution.

These difficulties were almost completely avoided by working at the lowest temperature consistent with measurable deformations under loads of 100 to 3600 grams per sq. cm.; and by adding 20 per cent of −200-mesh + 220-mesh electrode

carbon to the coal. Measurable deformation rates proportional to the load were obtained at 410° C. during the first 20 minutes after maximum length had been reached. During the 20- to 40-minute interval the deformation rates were only 10 to 20 per cent of those measured during the first 20 minutes. The 20- to 40-minute rates were independent of load for loads greater than about 800 grams per sq. cm.

The data for deformations during the first 20 minutes are given in Table I and Figure 5. Coal 16 was Alma seam (West Virginia) coal. The experiments listed in Table I were reproducible to within 10 per cent of the deformation values given. From the fifth column of Table I it will be observed that the maximum expansion of the coal pellet decreases very rapidly in going from a load of zero to one of 330 grams per sq. cm., but the decrease thereafter with load is relatively small, and the maximum expansion is practically constant for loads greater than about 1800 grams per sq. cm. These facts are consistent with the behavior of pellets of No. 30 coal (containing no electrode carbon) given in the preceding section of this paper. Such behavior is more characteristic of an elastic material than of a plastic one. The time necessary to reach maximum expansion decreases with the load, in the range from zero to 1800 grams per sq. cm., but beyond 1800 grams per sq. cm. it is constant; hence, variations in this time cannot explain the apparent constancy of the initial deformations at the higher loads.

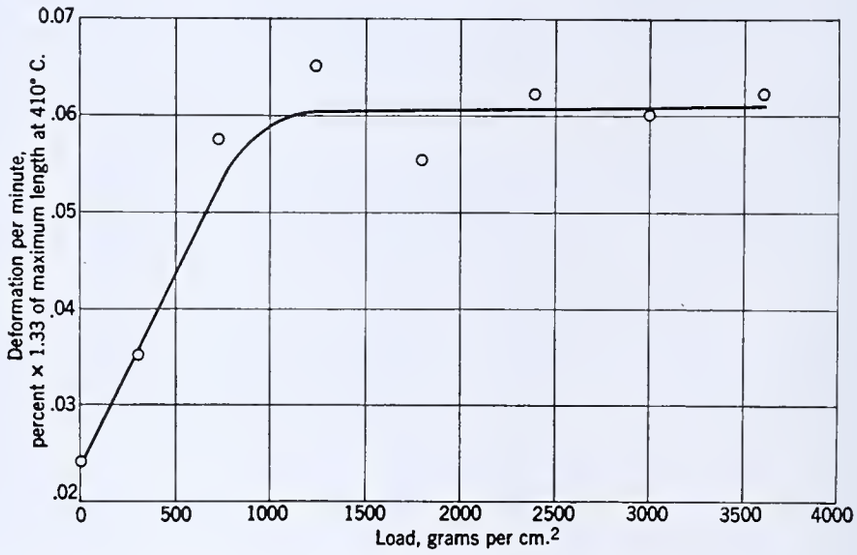

FIGURE 6. DEFORMATION RATES AT 410° C.

Coal 16 plus 20 per cent electrode carbon, 22- to 40-minute interval

The deformation-rate curve for coal 16, for the 2-minute interval (beyond the time of maximum expansion) of Figure 5, shows a very large deformation rate for relatively small loads. The curve then changes its slope very markedly. Beyond 330 grams per sq. cm. the curve is practically a straight line. This abrupt change in slope is of course due to the large correction made necessary by the change in maximum expansion with load.

This correction was made as follows: It was assumed that the expansion of 13.8 turns (see footnote to Table I) in 6 minutes for coal 16 at zero load occurred at the uniform rate of 2.3 turns per minute, and that the same expansion rate existed in all of the experiments of Table I. Then, for example, at 330 grams per sq. cm. for coal 16, since maximum expansion was reached in only 4 minutes, the deformation rate due to the increased load must have just equaled the expansion rate at this time, and hence during the subsequent 2 minutes a deformation of 2.3 turns per minute (in addition to the apparent rate of 0.380 turn per minute of column 6) occurred but was obscured by the expansion. The corrected deformation rate is therefore 2.30 + 0.380 or 2.68, as given in column 9 of Table I. For the 10- and 20-minute intervals at 330 grams per sq. cm. for coal 16, 4.6 turns are added to the total expansion during 10 and 20 minutes and the sums divided by 10 and 20, respectively, to obtain the figures in columns 10 and 11 of Table I.

The physical significance of this abrupt change in slope is not obvious. If the explanation (given above) concerning an exponential falling off in the rate of filling of voids due to frictional resistance to closer packing were correct, then one would expect that the portion of the curve for the higher loads would parallel the pressure axis. While the change in slope is admittedly large, there is, nevertheless, a positive and precisely measurable slope for the curve beyond 330 grams per sq. cm. This fact indicates that the deformations are elastic rather than plastic in character. When a given load was abruptly replaced by a lighter load at any time within the 10-minute interval (after maximum length was reached), the pellet expanded by an amount such that its length was close to what it would have been if under the lighter load from the beginning of the experiment. This behavior was also observed by Seyler (*2*, *3*).

The rapid change in deformation rates with time is easily seen by comparing the three curves for coal 16 in Figure 5. The rates decrease rapidly during the 2- to 10-minute interval and more slowly during the next 10 minutes. Since a plastic material has a constant deformation rate at a given temperature under constant load, it is apparent that both Alma seam and Pittsburgh seam coals are in this respect not truly plastic materials. That both coals are nevertheless capable of extensive deformation under small loads was shown by the authors' preliminary experiments with 100 per cent coal pellets at 450° to 475° C., where the "squashing" (described at the beginning of this section) was observed within a few seconds after maximum temperature was reached. It is therefore apparent that, although these coals are truly plastic for a very short time (probably not more than a minute at 460°), their subsequent behavior is more like that of an elastic material (for about 20 to 25 minutes at 410°) which loses its elasticity upon further heating.

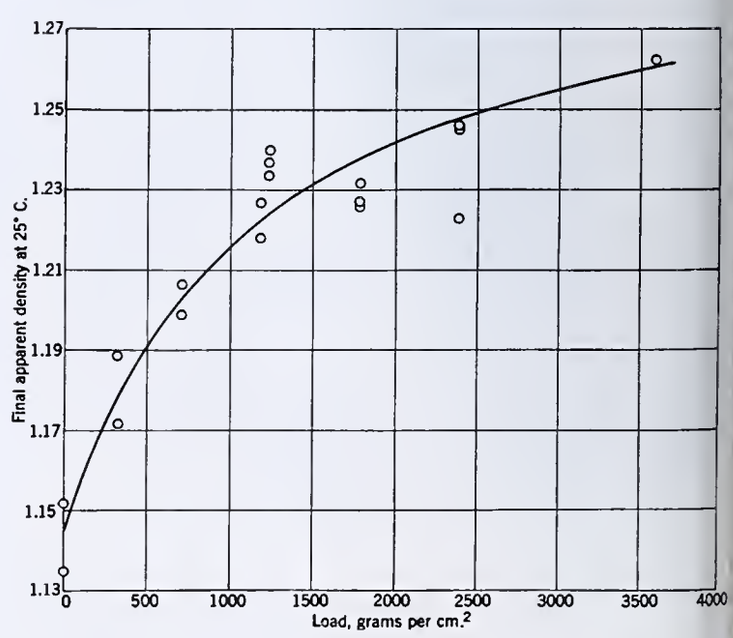

FIGURE 7. VARIATION IN APPARENT DENSITY

Coal 16 plus 20 per cent electrode carbon, instantaneous heating to 410° C. Total time at 410° C. about 40 minutes

The intercepts of the curves of Fig-ıre 5 indicate a small deformation at ero load. This is consistent with the xtensive squashing at very low loads nd 460° C. It is, however, possible hat a portion of this deformation at ero load is due to shrinkage caused y chemical changes.

In Figure 6 the deformation rates in he second 20-minute interval are lotted against the load. It is apparent ıat the rate is practically constant ›r loads greater than about 800 grams er sq. cm. This fact is perhaps ıore closely analogous to the behavior f coal 30 described in Figure 4 (slow eating and no electrode carbon) than the abrupt change in slope of the -minute interval curve of Figure 5. 'he deformation rates represented in igure 6 are probably combinations of ıe rate of filling of voids (slippage of etted grains of solid into a more closely acked formation), the rate of shrinkage ue to chemical decomposition, and the ıte of creation of new voids due to gas evolution.

The variation in apparent density as measured at 25° C., 'ter 40 minutes under load at 410° C., with the load is ıown in Figure 7. Here the curve does not flatten so sharply in Figure 6, but there is nevertheless a marked decrease slope at loads higher than about 800 grams per sq. cm. he only apparent explanation for the differences in shape etween the curves of Figures 6 and 7 is that the coefficient thermal expansion increases with the apparent density nd hence with the load). This would cause the curve of igure 6 to flatten more conspicuously than that of Figure 7.

Some incidental data may be noteworthy concerning the crease in voids during an experiment at 410° C. for 40 inutes. The voids increased from 15 to 24 per cent. The eight loss was about 7 per cent. The increase in voids ıring an experiment is unquestionably due to chemical ecomposition and hence should be independent of the load. t constant temperature and for a given time interval, the crease in voids would constitute an additive correction to ıe total deformation during that time interval; hence, the ›proximately straight-line relationship of Figure 5 for the gher loads would be unaffected by such correction. Changes the thermal expansion coefficient during an experiment ›uld involve corrections that are not simply additive. It however, probable that corrections for such changes are of lower order of magnitude than the observed deformations ıring the first 20-minute interval.

Plasticity of Solid Plus Oily Bitumen of Coal 30. ıe bitumens obtained upon pressure extraction of coal 30 ith benzene were melted in a mold of the same size and ape as was used for forming coal specimens. The plasticity the resulting pellets was determined at 120° C., and under essures ranging from 20 to 250 grams per sq. cm. These tumens behaved exactly as would be expected for a truly astic substance, in that under each load an accurately ıear rate of decrease in length with time was established most immediately, and this continued throughout the time application of the load, usually about 10 minutes. The tal decrease in length of the pellets (using several different ıds) was about 20 per cent. The results, corrected for anges in length and diameter during the application of ch load, are given in Figure 8. A straight line intercepting e pressure axis at a small positive value represents the ta very well.

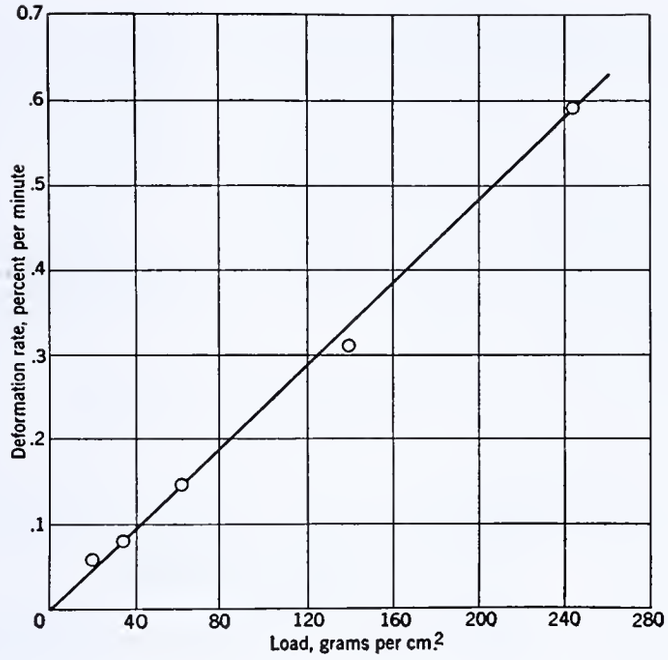

Figure 8. Plasticity of Solid Plus Oily Bitumen of Coal 30 at 120° C.

Discussion

Although the bitumen obtained from Pittsburgh seam coal by pressure extraction with benzene is a truly plastic substance, the coal itself does not, under any of the conditions used in this work, yield an accurately linear deformation-time curve under load. Seyler (*2*, *3*) obtained initial deformation rates proportional to the load at 361° C. with Busty-Vitrain. These rates were not constant, but decreased rapidly with time. Seyler's explanation is as follows:

> Whereas a substance like pitch at its softening point will deform continuously at the same rate at a constant pressure, the rate of deformation of coal decreases until it finally becomes zero and the flow ceases. This occurs at greater final contractions, the greater the pressure. What is the explanation of this? It is not due to loss of the property of deformation, for if the pressure is increased the movement is resumed. It does not appear to be related to the duration of the heating or to progressive decomposition. It seems to be due to an increase of the resistance to deformation which increases with the total extent of the contraction. It is of the nature of a back pressure acting in the opposite direction to the load and tending to produce expansion. If, for instance, the load is diminished, temporary expansion takes place until the total contraction is reduced to something like that corresponding to the reduced load. It can only be due, I think, to the pressure of the gases evolved by the decomposition of the coal. If these gases are developed faster than they can escape, they must tend to cause expansion and exert a vertical pressure in the opposite direction to the load.

While the phenomena observed by Seyler are consistent with those recorded in this paper, the authors prefer to place more emphasis than he does upon the very transient nature of the truly plastic properties of bituminous coking coals. In fact, these are so short-lived that none of their measurements are really plasticity measurements (except those for the benzene-extracted bitumens). They choose rather to characterize the measurable deformations as being those of an elastic solid whose elasticity is being rapidly destroyed by chemical decomposition.

Seyler's "plasticity" constant for Busty-Vitrain at 361° C. is about 0.013 per cent contraction per minute per gram per sq. cm. load. The same constant for Alma coal plus 20 per cent electrode carbon at 410° C. is 0.006, using the first 2-minute interval deformation rate at 330 grams per sq. cm.

The results obtained in this paper show that coal 16 is definitely more deformable at 410° C. than coal 30. This is in qualitative agreement with the data obtained by other investigators (*1*) who used the Davis plastometer.

A logical extension of the work described in this paper would be to attempt to measure the very rapid deformations at temperatures well within the plastic range. These were mentioned in connection with coals 30 and 16 at about 450° C. in the opening paragraph of the "rapid heating" section of this paper. Using small loads, and a rotating photographic film, it should be possible to obtain deformation rates in the temperature range where coking coals are known to be very fluid.

Throughout the work described in this paper all the coal samples used were "fresh," in that only an unavoidable minimum time of exposure to air was permitted between sampling and testing. It is, however, entirely possible that some of the coking power of the coals was destroyed during the briquetting process, and that some of the coking constituents may have been lost by distillation into the stream of nitrogen during the deformation measurements.

The authors wish to express their appreciation of helpful suggestions and criticism given by A. C. Fieldner and J. D. Davis, both of the U. S. Bureau of Mines.

Literature Cited

(1) Brewer, R. E., and Atkinson, R. G., Ind. Eng. Chem., Anal. Ed., 8, 443 (1936).
(2) Seyler, C. A., *Colliery Guardian*, 142, 401–4, 488–90, 577–9 (1931).
(3) Seyler, C. A., *Proc. S. Wales Inst. Engrs.*, 47, 9–14 (1931).

Received February 18, 1937. Presented before the Division of Gas and Fuel Chemistry at the 93rd Meeting of the American Chemical Society, Chapel Hill, N. C., April 12 to 15, 1937. Published by permission of the Director, U. S. Bureau of Mines. (Not subject to copyright.)

An Improved Machine for Testing Ductility of Bituminous Substances

ROBERT R. THURSTON AND C. E. CUMMINGS
The Texas Company, Beacon, N. Y.

THE ductility of a bituminous material is measured by the distance to which it will elongate before breaking, when two ends of a briquet of the material are pulled apart at a specified speed and temperature. The accepted procedure for conducting this test is outlined in Method D-113-35 of the American Society for Testing Materials, and specifies that a brass mold of definite dimensions shall be used for holding the specimen to be tested so that a cross section of material 1 cm. square can be elongated. The usual rate of elongation is 5 cm. per minute, and the customary temperature of the water bath in which the test is carried out is 25° C. (77° F.), although other speeds and temperatures are frequently used.

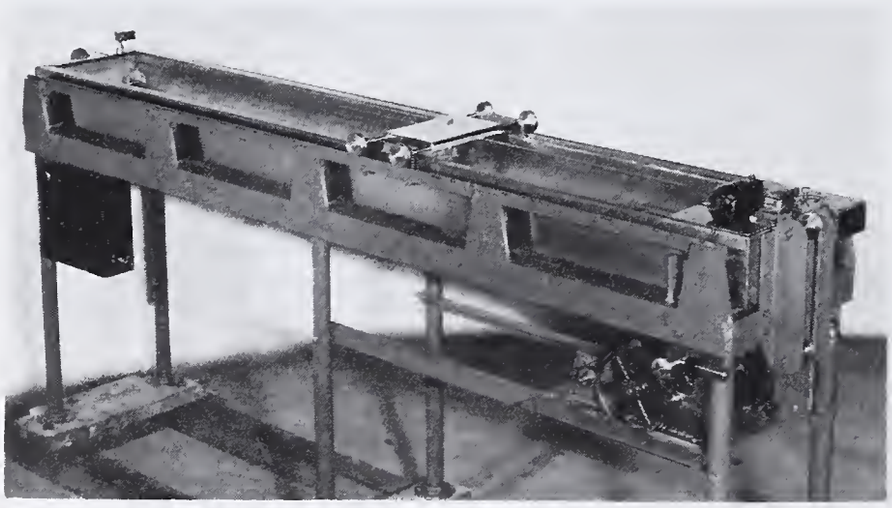

Figure 1. Improved Ductility Machine

The machine by which this test is accomplished is not described or specified by the A. S. T. M., but the usual machines available on the market are constructed of stone and permit a total elongation of the specimen of from 100 to 200 cm. The driving mechanism is ordinarily a screw which is submerged in the liquid and consequently disturbs the placidity of the bath during testing. This construction not only interferes with complete visibility of the specimens under test, but also fails to provide for constant temperature control.

An improved ductility machine has been developed at The Texas Company's Research Laboratories.

The bath itself is a Monel metal tank, placed inside a sheet-steel tank, provided with circulating liquid between the tanks. The liquid is preferably water, which is maintained automatically at a constant temperature by means of a cold-water coil and an electric heating element actuated by the mercury temperature control shown at the far corner of the bath. The motor shown on top of the machine at the near corner of the bath drives a paddle by means of a vertical shaft which keeps the water in the jacket circulating from end to end around a long vertical baffle between the inner and outer tanks. By setting the thermoregulator for the desired temperature, the water in the jacket is maintained constantly at this temperature and the bath inside the inner tank is thereby also held at this temperature without agitation.

The test is conducted in the inner bath; a white porcelain plate in the bottom makes readily visible the fine black threads of bituminous material, which are formed during the test. The carriage shown midway between the ends of the bath, is made of Monel metal and rides on rails by means of grooved wheels mounted on ball bearings. It is moved at the required speed by means of a 0.3 cm. (0.125-inch) flexible stainless-steel continuous cable which is wound on a grooved drum and draws the carriage the entire length of the bath at the required speed. Lugs attached to this carriage support the moving end of the molds containing the specimens under test which are beneath the surface of the water. This eliminates all agitation of the bath in which the test is being made and provides for maximum visibility of the specimens during testing. The stationary end of the molds, which are pulled apart by means of the carriage, can be placed at either end of the bath underneath the water level. The supports for two molds can be seen at the far end of the bath. Similar supports are attached to the carriage. The machine can be made in different widths to accommodate one, three, or five specimens. The photograph shows a machine built for testing five samples at once.

The driving mechanism shown in the foreground provides for four speeds, any one of which is occasionally required by purchasing specifications for asphalt: 0.25, 1, 5, and 10 cm. per minute. The usual centimeter scale is provided for reading the distance to which the specimens are pulled out before breaking. The entire machine is mounted on a pipe frame and is so installed that it is accessible from all sides. The electrical control panel for the motors and automatic controls for the bath are shown in the photograph; they are mounted underneath the driving mechanism attached to the frame in the foreground. When the molds are in place, the test can be started by a clutch which engages the driving mechanism. An automatic electric stop switch stops the driving mechanism when the carriage reaches the end of the bath and the clutch is released to enable the carriage to be moved back to the starting position by hand.

Received April 8, 1937.

Low-Resistance Glass Electrodes

H. MOUQUIN AND R. L. GARMAN, Washington Square College, New York University, New York, N. Y.

THE many improvements in design, the universal use of special glass, and the increased simplicity and reliability of electronic instruments, all have contributed to the present-day popularity of the glass electrode.

The greatest obstacle in successfully designing such an electrode is the inherent high resistance of the glass membrane, as well as its essentially fragile nature. Any successful model must be a compromise between these two practical factors. Most of the electrodes now commercially available have sufficient mechanical strength, but their electrical resistance is of the order of 10^7 ohms and there is no practical model with a resistance below one megohm. This relatively high resistance creates inconveniences, the most obvious of which are (1) the imperative use of a sensitive electrical measuring instrument such as a quadrant electrometer or vacuum-tube voltmeter, (2) the necessity of shielding, and (3) the need of special precautions in insulation. Although these difficulties are not insuperable, the errors caused by deviation films on the glass electrode itself are not always so easy to control (*1*).

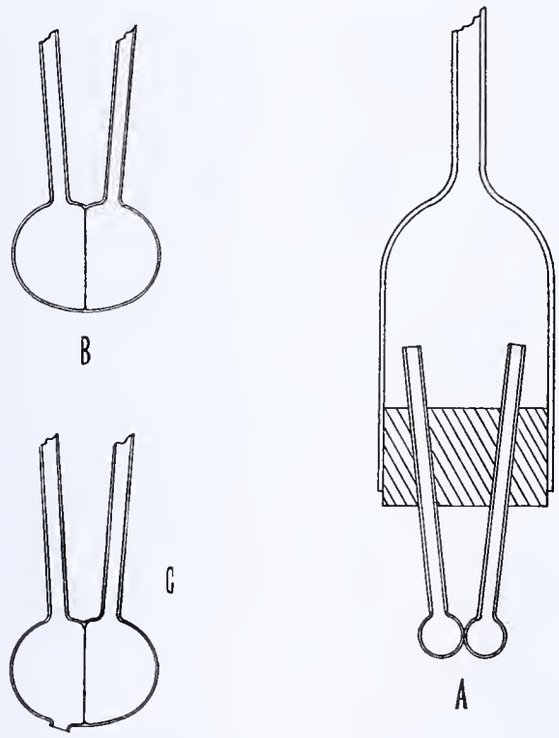

FIGURE 1

The type of glass electrode described here is sturdy enough for all practical purposes and yet has an electrical resistance ranging from 10^4 to 10^5 ohms. This relatively low resistance overcomes most of the inconveniences inherent in the older models.

This new type of electrode can be made in quantities, easily and rapidly; and no special glass-blowing skill is required. Although at first it is best to practice with a few pieces of ordinary glass, the low-resistance electrode must be made from special low-resistance glass tubing (Corning No. 015, 5- to 10-mm. bore, is convenient).

Starting with two pieces of tubing about 10 cm. long, a small sturdy bulb is blown at one end of each tube (bulbs should be about twice the diameter of the tube bore). The two tubes are inserted in a two-hole stopper, which is mounted on a blowing tube as shown in Figure 1, *A*, making it easy to blow equally into both tubes. The two bulbs are then heated as uniformly as possible, allowing them to touch and fuse together at one point. A final blow will cause the point of contact to expand into a thin plane membrane (Figure 1, *B*)—so thin that a few faintly colored interference rings should appear near the center of the membrane. If a gray or black spot appears, the blowing has been too prolonged; on the other hand, if the exterior hemispheres expand excessively, the pressure has been applied too suddenly; in either case the electrode will be excessively fragile.

A small hole near the bottom of one of the hemispheres (not too near the membrane) is necessary for drainage (Figure 1, *C*). It is made while the glass is still hot and before removing from the mounting, by using a narrow pointed flame and blowing gently as the glass softens in the flame.

Several other precautions may prove useful. Since the No. 015 glass tends to crystallize, only fresh tubing should be used and the number of reheatings kept to a minimum. If, on cooling, the electrodes tend to crack into two halves, the tubes should be mounted in the blower at a greater angle to each other. This will place the tubes farther away from the membrane. Finally, the outside of the electrodes may be given a light coat of paraffin wax to prevent creeping of solutions.

Obviously, the method of forming the glass membrane is the essential feature, and other constructional details lend themselves to many variations. For example, if the initial bulbs are blown in the center of one or both tubes, two or more side tubes can be kept on either side or both sides of the membrane. These membranes may also be used in making an all-glass compensated manometer. In order to make this instrument capable of standing considerable abuse and yet retaining its sensitivity near zero, three membranes intersecting in a common line may be formed by blowing simultaneously on three Pyrex glass bulbs.

The details of setting up the electrode for actual use can also be varied considerably. In this laboratory, the stopper used in the original mounting is kept on the finished electrode in order to facilitate subsequent clamping; then by means of a capillary pipet the intact hemisphere is filled with a reference solution; finally, the whole electrode is placed in a stoppered wide-mouthed bottle containing enough of the same reference solution to cover the membrane on the side of the pierced bulb. When required for use, two saturated calomel half-cells are introduced into the circuit and the asymmetry potential of the electrode system is determined. The calomel half-cells and glass electrode are easily mounted on a single stand by means of three buret clamps, and the unknowns substituted for the reference solution on the pierced side by placing the liquids in a small beaker which can be raised or lowered around the glass electrode. A short piece of tubing drawn to a capillary on one end can be attached to one of the calomel cells in order to make contact with the solution on the reference side of the electrode.

A precision better than one millivolt or 0.02 pH unit is easily obtainable with electrodes having a resistance of 10^5 ohms used in conjunction with a Leeds & Northrup enclosed lamp and scale portable galvanometer. In the range usually considered valid for glass electrodes, repeated experiments have shown that the accuracy is at least as good as this. Some of these electrodes have been used successfully in this laboratory for a period of over 6 months.

Summary

Procedure for making a low-resistance glass electrode is given. Electrodes made in this manner are fully as satisfactory as the traditional types, with the additional advantage that the measurements may be made with the ordinary potentiometer and a portable galvanometer of medium sensitivity.

Literature Cited

(1) Kahler, H., and DeEds, F., *J. Am. Chem. Soc.*, 53, 2998 (1931).

RECEIVED March 4, 1937.

Optical Spectroscopic Determination of Boron

Polarizing Attachments

R. K. CALFEE AND J. S. McHARGUE, University of Kentucky, Lexington, Ky.

THE exact measurement of certain impurities, usually present in minute quantities in metals, tissues, and compounds, is often important in metallurgy and the nutrition of plants and animals. Chemical methods for the determination of minute quantities of the minor elements are often tedious, complicated, and, in many cases, entirely unreliable. The quantitative spectroscopic methods as described by several investigators (*1, 2, 6, 8, 10, 11, 12*) are ideally suited for this type of analysis and are considered (*5*) more accurate than chemical methods. Spectrographic methods have been applied successfully for the control of industrial processes (*4*) in alloy analysis and for the classification of steels, as well as test methods (*13*) and color measurements in textile fabrics (*9*). Spectroscopic methods of analysis are also applicable to samples of biological material (*3*).

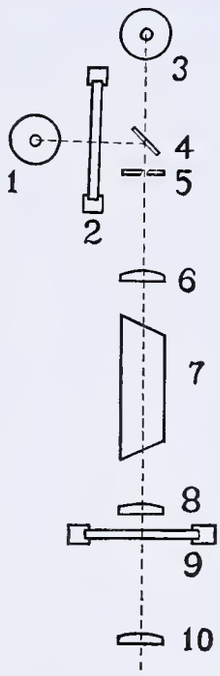

FIGURE 1. OPTICAL SYSTEM

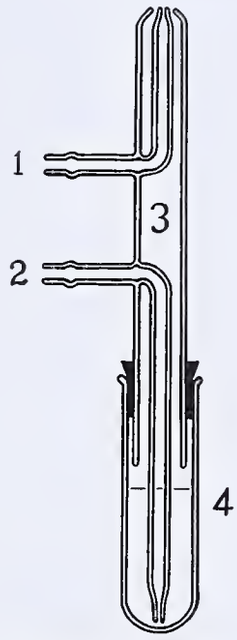

FIGURE 2. OXYGEN BLAST TUBE

For burning and saturating natural gas with an alcoholic solution of methyl borate

Photographic methods of spectrum analysis have been developed to a much greater extent than optical methods. In many instances the wave lengths of lines most accurately measured are beyond the range of visible light. A permanent record of the chemical constituents of matter can also be obtained by photographic methods.

Most optical methods have been based upon systematic observation and dilution of a solution of some compound of an element until certain lines are no longer visible in the spectrum. Since the end point of such a method occurs under conditions of low instrument efficiency, a high degree of accuracy is impossible. A quantitative optical method for the spectroscopic determination of boron, described by the authors in 1932 (*7*), depends upon the absorption of certain lines of the boron spectrum by a standard solution of potassium permanganate.

The boron is converted to methyl borate, volatilized with methyl alcohol, and burned in an atmosphere of oxygen before an absorption cell containing the permanganate solution. The boron content of the alcohol solution is estimated from the normality of the potassium permanganate solution added to the cell to obscure the bright lines of the boron spectrum. (This procedure has since been modified to check the absorption of the spectrum and to allow duplicate readings to be made on the same solutions. After absorption of the boron spectrum a solution of ferrous ammonium sulfate, standardized against the permanganate, is added to the solution in the cell. In properly conducted determinations the spectrum will be discernible upon the addition of 0.2 ml. or less. Duplicate readings are made by adding a definite quantity, usually 5 ml., and again absorbing the bright lines by additions of permanganate solution. A correction is made for the water added with the ferrous ammonium sulfate.)

Recent improvements in this method, which allow determinations to be made at more efficient light intensities, include a tube for saturating natural gas with a solution of methyl borate in methyl alcohol, ignition in an oxygen blast, a standard boron spectrum for comparison, and polarizing accessories for measuring differences in light intensities.

A New Procedure

The optical system is shown in Figure 1.

The transmission of light is represented by dotted lines. Light originating at burner 1 is plane-polarized by plate 2, and is reflected by a small mirror, 4, through the lower half of slit 5. Light originating at burner 3 passes over the mirror, 4, and through the upper half of slit 5. Lenses 6, 8, and 10 invert the spectra and retain proper focus on the compound prism, 7. The analyzing plate, 9, is mounted on a movable scale. A standard boron solution is burned at 1 and the sample solution is burned at 3. Rotation of plate 9 changes the intensity of the spectrum originating from burner 1, leaving that from 3 unchanged, thus allowing the intensities of the two to be matched and the unknown to be measured in terms of the known.

A glass burner as shown in Figure 2 is used for exciting the spectrum. Connections with oxygen and gas are made at 1 and 2, respectively. The orifice at the lower end of tube 2 is neces-

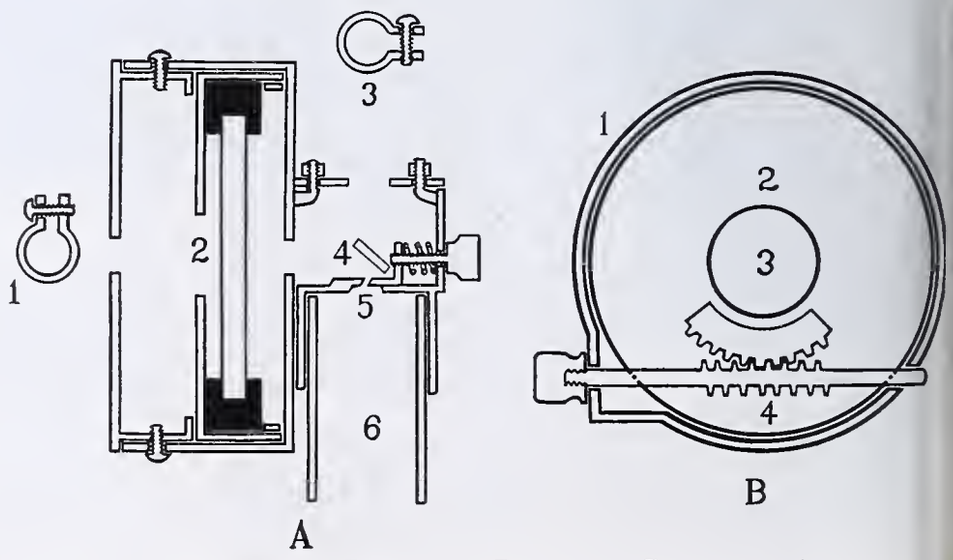

FIGURE 3. CONSTRUCTION DETAILS OF POLARIZING COLLIMATOR ATTACHMENT

sarily very small, to produce a fine stream of bubbles which is essential for a steady flame and the most efficient saturation of the gas with the solution. The oxygen and gas tubes are permanently adjusted and sealed to tube 3. Tube 4 is graduated to hold 2 ml. and is detachable to facilitate the changing of solutions. Constant gas pressures are maintained by the use of glass stopcocks.

The construction of the collimator attachment is shown by diagram *A*, Figure 3.

The clamps, 1 and 3, support the burners rigidly in position; they are accurately aligned and permanently attached. The polarizing plate is held in the cylinder, 2, by a brass spring. A slight degree of rotation is provided for accurate adjustment of the zero point on the scale. The mirror, 4, is permanently sealed in proper position. The slit, 5, is adjustable, as indicated, by means of a screw and spring. Attachment is made to the collimator tube, 6, of the spectroscope by means of a removable clamp. Diagram *B*, Figure 3, shows the worm and pinion, 4, provided for rotation of the polarizing plate. Caps are bolted on for protection and support of working parts. The attachment is constructed of brass.

The analyzing head, shown in Figure 4, is attached to the telescope tube of the spectroscope. In the horizontal section, *A*, 1 represents the lightproof housing, 2 is a plate carrying the scale, and 3 is the case containing the analyzing plate. A reducing-gear system, 2 to 1, was used between 2 and 3 to obtain greater sensitivity in rotation of the analyzing plate and wider spacing on the scale.

The side elevation, *B*, shows the assembly of the parts. In this diagram 1, 2, and 3 are as represented in *A*, but are shown in section. The knob, 4, is the exterior means of rotation of the movable parts. Case 3, containing *D*, the analyzing plate, is supported in place by short sections of tubing projecting into the telescope tubes, which serve as bearings. A fixed lens, *L*, and a movable lens, *L'*, are provided to obtain proper focus on the spectroscopic prism.

The polarizing plates used in this instrument consisted of a film or matrix for submicroscopic dichroic crystals mounted between glass disks. The crystals, about 1×10^{12} per square inch (manufacturer's specifications), were accurately oriented, so that the whole film functioned as a single crystal. The structure is invisible at 1100 magnifications. Practically complete polarization of visible light obtains, except at the extremities of the spectrum where the sensitivity of the eye is less efficient.

The crystals effect polarization by splitting light rays into two oppositely polarized beams, one being transmitted parallel to the main axis, and the other reflected at right angles.

The greatest accuracy in matching boron spectra was obtained after an initial rotation of 30°. Other factors, such as reflection, diffusion, etc., resulted in losses of light, further reducing the transmission efficiency.

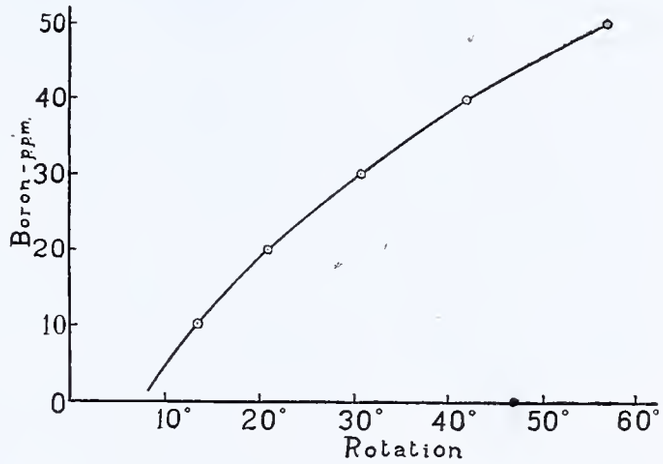

FIGURE 5. CALIBRATION CURVE OF BORON

A quantity of boron slightly less than 1 p. p. m. in methyl alcohol was detectable at a saturation temperature of 35° C. The greatest accuracy was obtained in matching spectra produced by solutions containing from 5 to 35 p. p. m. of boron. Concentrations much above 50 p. p. m. produced spectra too bright for satisfactory comparison. The portion of the scale corresponding to a 60° rotation from zero transmission was therefore calibrated from 0 to 50 p. p. m. It was found experimentally that about 30 per cent of the light available, calculated from the quantity of boron in solution, was lost in the polarizing system. A further loss of approximately 20 per cent resulted from the utilization of less than 60° of the total rotation to maximum transmission. It was found more practical, considering instrument design and a greater accuracy in the preparation of standardized solutions, to increase the boron content of the solution than to concentrate the light by a lens system. A standard containing 100 p. p. m. was used.

Figure 5 shows the calibration curve obtained experimentally. Each point is the average figure of triplicate determinations on five solutions, representing about 150 instrument readings. The instrument scale was converted from degrees to parts per million of boron in the alcoholic solution.

Because of the pronounced effect of temperature changes on the cubical expansion of methyl alcohol, it was found advantageous to correct all volumetric solutions to the capacity at 0° C. For this correction the formula $V_t = V_0(1 + t\,1.1856 \times 10^{-3} + t^2\,1.5649 \times 10^{-6} + t^3\,0.9111 \times 10^{-8})$ was used to prepare a curve giving the corrections for temperatures from 15° to 35° C.

The recommended procedure for the preparation of the sample is for the most part that previously described (*7*). The sample should contain between 0.025 and 0.50 mg. of boron for quantitative determination. Organic material is ignited in the presence of sodium carbonate. Brines and waters are made alkaline before concentration, and soils and minerals are fused with sodium carbonate. In the analysis of brines, large organic samples, and materials requiring fusion with sodium carbonate, it is of considerable advantage to acidify the aqueous extract of the residue

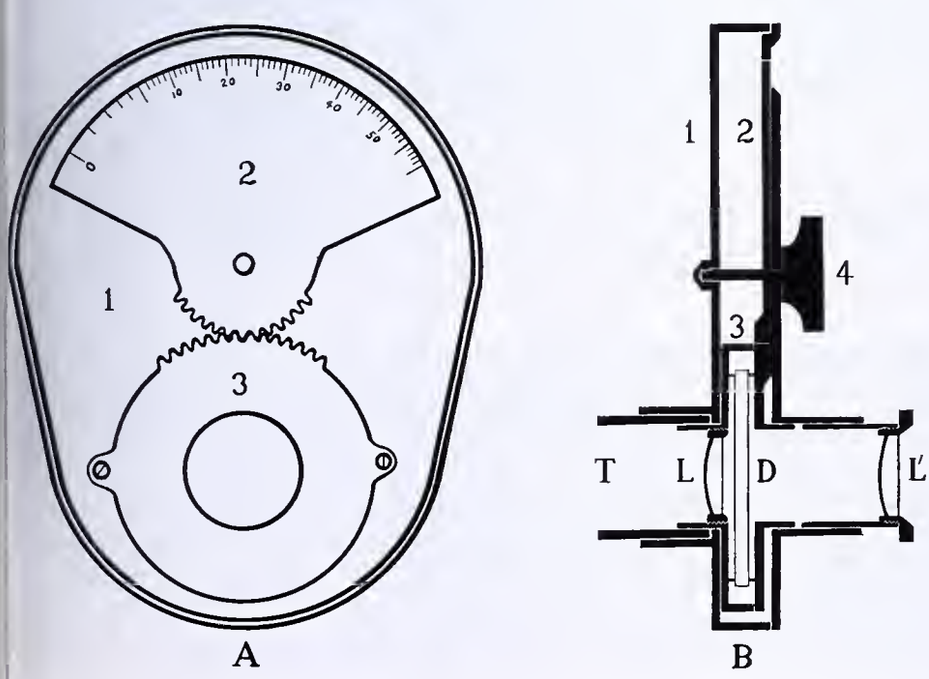

FIGURE 4. CONSTRUCTION OF ANALYZING TELESCOPE ATTACHMENT

with dilute sulfuric acid and precipitate the halides with a solution of silver sulfate. Excessive quantities of sodium sulfate are then removed by dehydration with ethyl alcohol and filtration. The boron after removal of the alcohol is concentrated by solution and filtration or distillation with methyl alcohol. The use of phosphorus pentoxide is very effective in inducing esterification, particularly in the distillation of residues which require much water to transfer. The final solution of boron is made with methyl alcohol containing 5 per cent (by volume) of sulfuric acid.

Usually 5 readings on 3 portions of the final solution are made and the average is taken as the actual boron content. The formula p. p. m. $= R \times V_0/W$ converts the scale reading to p. p. m. of boron in the moisture-free sample.

Table I. Comparative Spectroscopic Analyses for Boron in Plant Material

Sample	Boron: Permanganate method	Boron: Polarization method
	P. p. m.	*P. p. m.*
Carrot (leaves)	7.4	7.1
Carrot (tuber)	5.1	5.0
Sweet potato	2.75	2.0
Tomato (fruit)	9.0	9.0
Tomato (fruit	8.5	8.5
Tomato (fruit)	10.1	9.8
Tomato (vines)	5.3	5.0
Tomato (vines)	5.5	5.6
Cabbage	8.0	8.2
Lettuce	19.0	18.6

The equipment and procedure described have been in use for about 6 months. Analyses compare very favorably with values obtained by the previously published method (*7*). Individual readings are much closer to the average, smaller samples are permissible, and the analytical procedure is much shorter. Data on a few samples of plant material analyzed by both methods are given in Table I.

Summary

Polarizing attachments and an oxygen-methane blast burner for the spectroscopic determination of boron are described. Natural gas saturated with methyl borate in methyl alcohol is ignited in an oxygen blast to excite the spectrum. A standard solution on ignition and polarization produces a reference spectrum in juxtaposition to the spectrum of the sample. The degrees of rotation of the analyzing plate are read on a scale in terms of parts per million of boron in the solution upon matching the intensities of the spectra. Recommendations are given for the treatment of samples containing halides and large amounts of sodium salts. Samples containing from 1 to 600 p. p. m. of boron have been analyzed.

Literature Cited

(1) Breckpot and Mevis, *Ann. soc. sci. Bruxelles*, B54, 99–119 (1934).
(2) Brode and Steed, Ind. Eng. Chem., Anal. Ed., 6, 157–9 (1934).
(3) Drea, W. F., *J. Nutrition*, 8, 229–34 (1934).
(4) Dreblow and Harvey, Ind. Eng. Chem., 25, 823–5 (1933).
(5) Duffendack, O. S., Wolfe, R. A., and Smith, R. W., *Ibid.*, Anal. Ed., 5, 226–9 (1933).
(6) Kreamer, W., *Z. anal. Chem.*, 97, 89–93 (1934).
(7) McHargue, J. S., and Calfee, R. K., Ind. Eng. Chem., Anal. Ed., 4, 385–94 (1932).
(8) Nitchie, C. E., *Ibid.*, 1, 1–7 (1929).
(9) Nutting R. D., *Textile Research*, 5, 391–400 (1935).
(10) Schubert, H., and Cruse, *Z. physik. Chem.*, A172, 143–55 (1935).
(11) Smith, D. M., *J. Inst. Metals*, 55, 417–25 (1934).
(12) Triche, Henry, *Compt. rend.*, 199, 419–21 (1934).
(13) Waldbauer and Gantz, Ind. Eng. Chem., Anal. Ed., 5, 311–13 (1933).

Received February 25, 1937. Contribution from the Department of Chemistry of the Kentucky Agricultural Experiment Station. The investigation reported in this paper is in connection with a project of the Kentucky Agricultural Experiment Station and is published by permission of the director.

Storage of Carbon Dioxide from Dry Ice for Dumas Determinations

W. H. HAMILL and J. A. ALICINO
Fordham University, New York, N. Y.

DRY ICE is a convenient source of pure carbon dioxide and the following method of storage makes it readily available for Dumas nitrogen determinations with less effort and in purer form than is ordinarily possible with double Kipp generators.

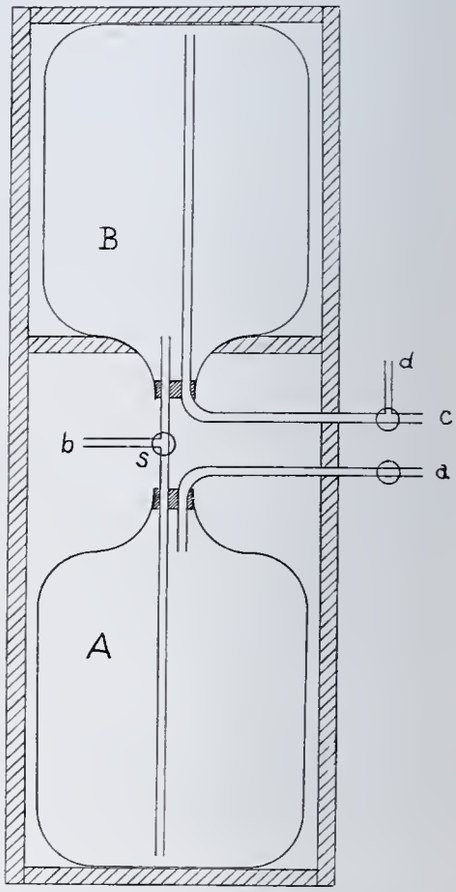

Figure 1

Two carboys are mounted in a rack (Figure 1), connected as shown, and the lower one is filled with water. Carbon dioxide from any convenient source, which need not be pure, is introduced through *b* and bubbled through the water until it is free of dissolved air. A flask containing a few chunks of dry ice is then connected at *a* and the water is forced from *A* to *B*, displaced air escaping through *d*. A carbon dioxide Kipp generator, which requires no precautions in filling, is connected at *c* and serves to maintain an atmosphere of carbon dioxide above the water in *B*. During operation the combustion tube is connected at *a*.

The time required to recharge a 40-liter (10-gallon) carboy is about 15 minutes. Over a period of months, since first setting up the apparatus, the blank has been 0.010 cc. within 10 per cent and has not changed either upon refilling or standing. Of this residual gas only 0.003 cc. is due to impurity in the carbon dioxide (1000 bubbles), the rest apparently being expelled during combustion from the combustion tube and filling. Because of the pressure under which the gas is stored, it has been found that one minute suffices for flushing out the combustion tube.

Received May 19, 1937.

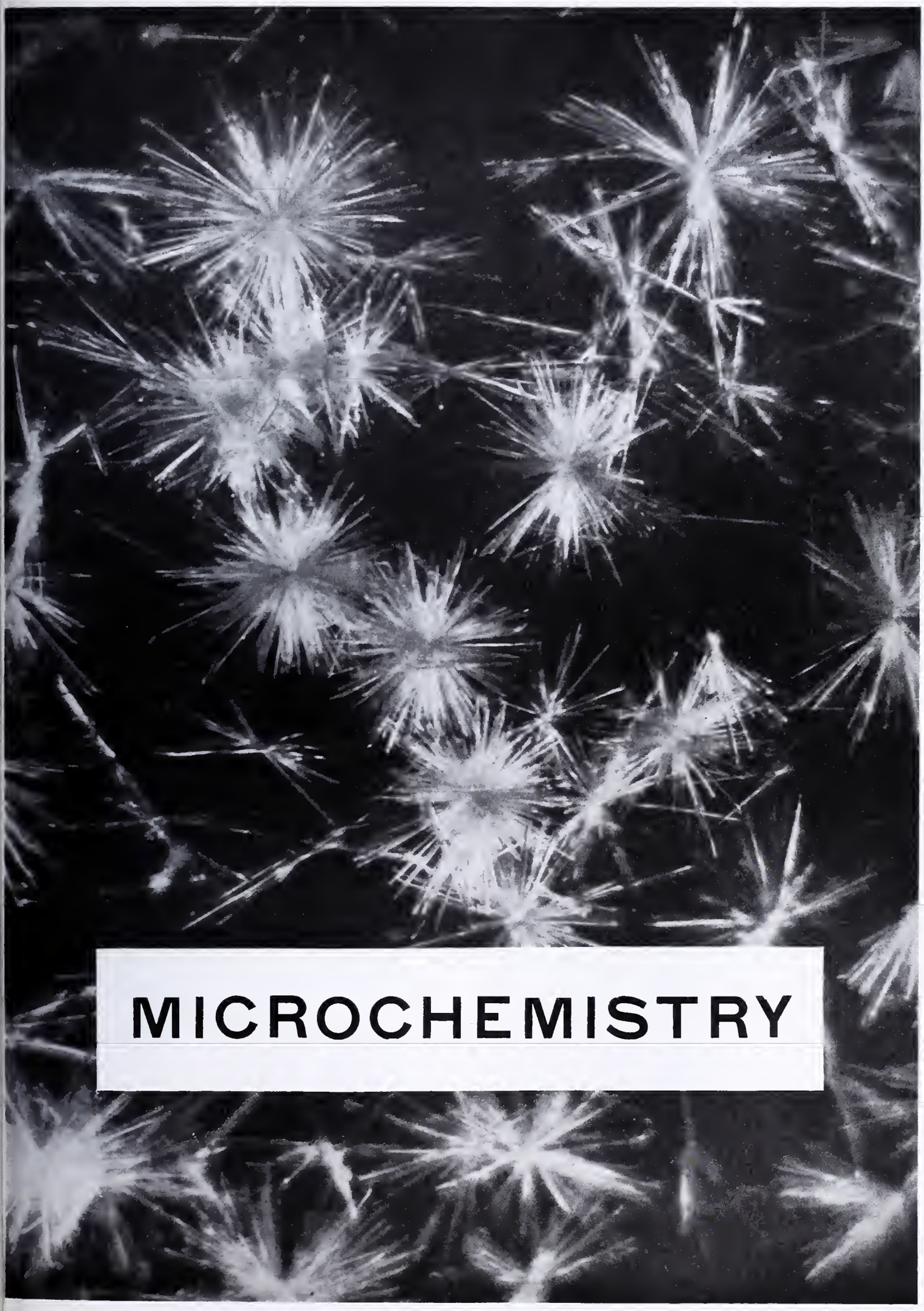

Prepared by Leopold R. Cerecedo and Frank Kaszuba and photographed by Leo K. Yanowski and Walter A. Hynes, Fordham University

Crystals of Vitamin B_1 Hydrochloride from Brewer's Yeast

Microdetermination of Density by the Falling-Drop Method

SEYMORE HOCHBERG AND VICTOR K. LA MER, Columbia University, New York, N. Y.

BARBOUR and Hamilton describe an ingenious method (*1*) for the microdetermination of the density of an aqueous solution, based upon the rate of fall of a minute drop of the solution through an immiscible liquid of low viscosity and volatility. Using bromobenzene-xylene mixtures they obtained densities of 0.01 cc. of solution to an accuracy of ±0.0001. Recently, Fenger-Ericksen, Krogh, and Ussing (*2*) applied the method to the determination of the deuterium content of heavy water. Using an elaborate apparatus and timing by stop watch to ±0.02 second, they claim that the method is capable of an accuracy of ±0.000001 in the density. Their method of calculation, however, involves an error of principle, which produces an error of 0.000022 in the numerical example they cite.

In this paper is described a simpler form of apparatus and technic which is capable of determining rapidly the density of water solutions to ±0.00001 using 2 drops of solution, each of 0.001- to 0.01-cc. volume. The time required for a drop of solution of unknown density to fall through 15 cm. of a bromobenzene-xylene mixture is compared with the time required by similar drops of solutions of known density.

For spheres of equal size, of densities d_1 and d_2, respectively, falling through a medium of density d', the times of fall, t_1 and t_2, respectively, are related as follows:

$$\frac{t_2}{t_1} = \frac{d_1 - d'}{d_2 - d'} \qquad (1)$$

For any given medium and a given drop size it follows that for spherical drops

$$d = \frac{k}{t} + d' \qquad (2)$$

where d is the density of a drop, t is its time of fall over a fixed distance, and k is a constant depending upon the viscosity and density of the medium and the distance over which the drop is timed.

Equation 2 is obeyed even though the drop is distorted slightly, provided an accuracy of only ±0.0001 is desired (*1*). However, to attain an accuracy of ±0.00001, it is necessary in making interpolations to apply a correction, the magnitude of which is determined by the velocity differences—and hence by the density differences—over which one interpolates.

Experimental

For the determination of densities of water solutions ranging from 0.997 to 1.110 at 25° C., master solutions of potassium chloride (0 to 17 per cent separated by differences of 1 per cent) are made by weight (*3*). From these a series of solutions separated by steps of 0.250 per cent of potassium chloride is prepared by dilution, and preserved in glass-stoppered bottles.

A series of fifteen glass tubes (35 cm. long, 7 mm. in inside diameter) containing solutions of bromobenzene and xylene graded in density between 0.996 and 1.108 is set up in a thermostat (with glass window) regulated to ±0.002° C. The drops are timed between marks 10 cm. and 25 cm., respectively, below the surface of the bromobenzene-xylene mixture.

To avoid undue waste of valuable solution, an orienting determination of the density is made by employing a more viscous medium, prepared from light petrolatum and dibutyl phthalate of such proportions that a drop (0.005 to 0.01 cc.) of distilled water requires 2 minutes to fall 15 cm. through the mixture. From the preliminary result one selects the proper tube of bromobenzene-xylene to give the most accurate density determination. That tube of bromobenzene-xylene mixture is used in which drops of the unknown and of the standards for comparison require between 25 and 70 seconds to fall between marks—the longer the time the more sensitive the method.

The capillary pipet (Figure 1) is made from glass tubing 3 mm. in inside diameter and a glass rod selected to fit the tubing with very little clearance. The dimensions are not critical. The plunger is given a thick, uniform coating of a grease made by melting together, in equal proportions, powdered resin and ordinary stopcock grease. Care is taken to prevent large air bubbles in the mercury column or between the plunger and the mercury. Exact reproducibility of the drops is obtained by measuring their volume between two marks, approximately 9 cm. apart on the capillary. The drops are forced out of the pipet under the surface of the bromobenzene-xylene solution. Upon raising the pipet out of the medium the drops are broken off by the surface tension. The drops were timed by a stop watch accurate to ±0.2 second. A single rinsing, using approximately 0.001 cc. of solution, is sufficient to clean the pipet.

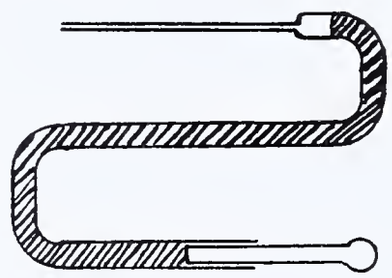

FIGURE 1

Corrections

When interpolating between standard solutions differing by 0.250 per cent in potassium chloride, the maximum density correction to Equation 2 is −0.00002 at a density approximately midway between those of the standards, and decreases to zero as the density of either standard is approached.

Difference between Interpolated Density and Density of Closest Standard	Correction
0 − 0.00030	0.00000
0.00030 − 0.00060	−0.00001
0.00060 − 0.00080	−0.00002

Precision and Method of Calculation

Potassium chloride solutions of the densities shown in Table I were dropped through the same solution of bromobenzene and xylene.

TABLE I. MICRODETERMINATION OF DENSITY

Solution number:	I	II	III	IV	V
Density at 25,000° C.:	0.99707	0.99866	1.00025	0.99787	0.99946
	Sec.	*Sec.*	*Sec.*	*Sec.*	*Sec.*
Time, t	55.0	29.0	20.6	37.6	24.0
	55.2	29.0	20.6	37.6	24.0
	55.2	29.0	20.6	37.6	24.0
	55.2	29.0	20.6	37.6	24.0
	55.2	29.0	20.6	37.6	24.0
Mean, $1/t$	0.0181	0.0345	0.0485	0.0266	0.0417

Calculating the density of IV from I and II we have:

$$d = \frac{0.0266 - 0.0181}{0.0345 - 0.0181}(0.99866 - 0.99707) + 0.99707 = 0.99789$$

Correction −0.00002

0.99787

The density of V, calculated from II and III by applying the correction as above, is d = 0.99745, which checks the result by weight to 0.00001.

Fenger-Ericksen, Krogh, and Ussing interpolate as though the d vs. t curve were linear. A considerable error should often result. For example, using the data on page 1267 of

their article and interpolating the density as a linear function of $1/t$, we obtain for the deuterium concentration in their sample 2.667 per cent rather than 2.645 per cent. The correction over such a short interpolation is negligible compared with the error of the incorrect interpolation.

Conclusions

A simple apparatus and technic are described with which the density of water solutions may be measured rapidly to ±0.00001, using for each determination 2 drops of solution each containing 0.001 to 0.01 cc. For heavy water this corresponds to an accuracy of ±0.01 per cent calculated as D_2O.

Literature Cited

(1) Barbour and Hamilton, *J. Biol. Chem.*, **69**, 633 (1926).
(2) Fenger-Ericksen, Krogh, and Ussing, *Biochem. J.*, **30**, 1264 (1936).
(3) International Critical Tables, Vol. III, p. 87, New York, McGraw-Hill Book Co.

Received April 2, 1937.

Paper as a Medium for Analytical Reactions

I. Improvements in the Spot Test Technic

BEVERLY L. CLARKE AND H. W. HERMANCE, Bell Telephone Laboratories, New York, N. Y.

FEIGL (*1*) has described methods of making analytical tests on single drops of liquids, which are classified under the term "spot tests." The drop may be placed, for example, on suitable absorbent paper, where it spreads uniformly until the surface forces are balanced. The wet area is then treated with a drop of the reagent, and the reaction produces an identifiable colored product. A variation is to place the two drops side by side on the paper, so that reaction occurs along a line formed where the spreading boundaries meet.

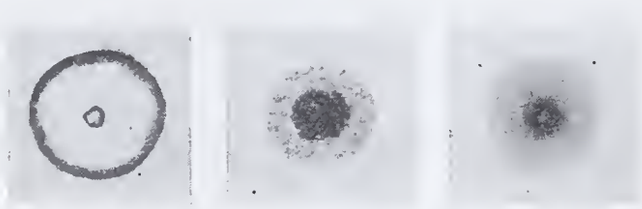

A *B* *C*

FIGURE 1. THREE TYPES OF SEPARATIONS BY CAPILLARY SPREADING

A. Separation by precipitation of one component
Ions separated: Fe (2γ) and Ni (5γ)
Paper impregnant: $BaCO_3$
$Fe(OH)_3$ precipitated at center. Ni washed to periphery and detected by immersing paper in dimethylglyoxime solution
B. Separation based on difference in solubility of reaction products
Ions separated: Ag (2γ) and Cu (3γ)
Paper impregnant: CdS
Black Ag_2S precipitates at center; brown CuS, having higher solubility product, precipitates in outer zone
C. Separation based on difference in colloidal behavior
Ions separated: Cu (5γ) and Fe (3γ)
Paper impregnant: $Zn_2Fe(CN)_6$
Red $Cu_2Fe(CN)_6$ fixed strongly at center; $Fe_4[Fe(CN)_6]_3$, not readily fixed, diffuses outward with solution, giving blue peripheral zone

Because the sensitivity of such a test, with a given reaction, is determined by the smallest quantity of reaction product per unit paper area that the observer can just detect, any modification in the technic that tends to concentrate this product by restricting the area of reaction will lead to increased sensitivity. Thus Hahn (*3*) points out the advantage gained when the solution under test is introduced into the paper through the fine tip of a capillary tube. The test drop then enters at a single point, precipitation or adsorption of the reaction product taking place in the immediately surrounding region, where it remains fixed in the fibers while the clear liquid spreads radially outward by capillarity. A concentration of the colored product, which would otherwise be spread over the whole area originally wetted by the test drop, is obtained, rendering minute quantities distinctly visible.

The present article deals with improvements in both sensitivity and reproducibility brought about by the use of a capillary buret and thin, close-textured papers impregnated with reagents having low solubility in the liquids under test. To afford better control of the conditions of test, a special buret assembly is described, which permits delivering to a small area of the reagent paper, through a capillary orifice, a measured microvolume of solution, at a controllable rate of flow.

The slow capillary spreading of the solution from a central point in the meshes of an impregnated paper, combined with differences in solubility, reaction rate, and colloidal properties, may work to effect the separation of two or more substances. Elementary reasoning would lead one to expect that, of several substances precipitable in a given paper, the most insoluble would be the first to form around the point where the liquid is introduced, the other products precipitating concentrically around this in the inverse order of their solubilities. Experimentally this is not always attainable because of numerous interfering effects, but when conditions are favorable the process of simultaneously detecting two or more ions is a simple one.

In some cases the separation is better accomplished by precipitating only one of the substances, at the point of introduction, by the fixed impregnant. The other remains in solution and diffuses outward. After drying, a small quantity of wash liquid, again introduced at the center, carries any of the soluble ion remaining in the central portion of the spot to the concentric peripheral ring and there concentrates it. By dipping the dried spot in a second reagent the color reaction characteristic of this substance is brought about. Colloidal properties may aid in effecting separations, as, for example, when one of two substances precipitated is strongly adsorbed by the fibers and therefore fixed near the point of precipitation, while the other diffuses outward with the liquid.

Regardless of the factors on which a given separation depends, the effect is enhanced by reducing to a minimum the area over which the solution enters the paper. In many cases, control of the rate of spreading, possible with the capillary buret, aids materially. Figure 1 shows a photograph of capillary separations using the technic herein described. Figure 2 shows a comparison of effects with and without the buret.

Thus the localization of reaction products through the action of capillarity makes possible the attainment of increased sensitivity as well as the simultaneous recognition of substances. However, if the precipitating reagent contained in

the paper is soluble in the solution under test, effective, uniform fixation of the reaction product is often delayed or entirely prevented. As the solution flows into paper so impregnated, the first portions react with the soluble reagents, producing a small quantity of colored product. The clear liquid, its reactive ion or ions thus removed, spreads outward carrying with it much if not all of the impregnant, depleting the area around the point of entrance. Hence the next portions of solution will remain unprecipitated until they are brought into contact with the reagent, concentrated by evaporation, at the periphery of the wet area. A further disadvantage of many soluble impregnants is their instability. Many soluble alkali salts decompose rather easily in paper, while less soluble salts of other metals keep reasonably well.

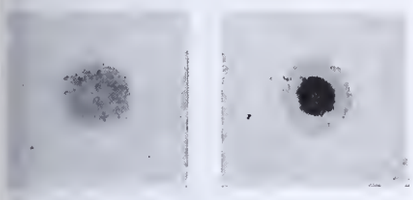

A *B*

FIGURE 2. COMPARISON OF CAPILLARY BURET AND DROP METHODS IN SEPARATIONS

Composition of solution, 25γ Cu and 25γ Fe per cc.
A. 0.005 cc. added to $Zn_2Fe(CN)_6$ paper as single drop from glass rod
B. 0.005 cc. added from capillary buret

These objections point to the desirability of papers containing reagents not readily soluble in water but still capable of furnishing the small necessary concentration of the precipitating ion to react with the substance under test. As a matter of fact, the concentration of the reactive ion can be regulated automatically by proper selection of the impregnating salt, and the specificity of the test greatly improved by thus restricting the number of possible reactions. For example, potassium xanthate has little value as an impregnating reagent in test papers. It decomposes readily and the paper is useless after a few days. It precipitates practically all of the heavy metals, several of which give colored compounds. When cadmium xanthate is used, however, a paper is obtained which gives sensitive reactions only with copper and molybdenum and will keep for months. The colorless cadmium and zinc ferrocyanides afford similar advantages as sources of ferrocyanide ion.

Figure 3 shows a comparison of the effects produced when iron is tested for by the buret method, using potassium ferrocyanide and zinc ferrocyanide papers.

The use of an alkali sulfide as a source of the sulfide ion in test papers is entirely unsatisfactory, since it permits of no control of the concentration of that ion. Furthermore, alkali sulfides are highly soluble and unstable. When zinc, cadmium, or antimony sulfide is used, however, stable papers result, each of which has its own maximum sulfide-ion concentration and hence precipitates only those metals whose sulfide solubility products are sufficiently low. Antimonous sulfide paper, for example, precipitates copper, silver, and mercury in the presence of zinc, cadmium, lead, tin, iron, nickel, and cobalt. Precipitated red silver chromate is ordinarily encountered in analysis as a reaction product. In paper, conditions may be reversed, silver chromate serving to detect halides.

Such test papers are prepared by direct precipitation of the reagent substance on the paper fibers. The preparation of each reagent paper presents its peculiar problems (which will be dealt with in a future article in this series), but in general the method is as follows:

The paper is first soaked in a solution containing one of the ions to be precipitated, dried, then immersed quickly in a solution containing the other ion, washed thoroughly, and dried. For example, cadmium sufide paper is prepared using a 10 per cent solution of cadmium acetate, followed by precipitation with 5 per cent sodium sulfide. Final washing is done with weak acetic acid to remove any remaining traces of sodium sulfide.

It might be supposed that the use of "insoluble" reagents would slow up the reaction rate. In paper, however, this retardation is not serious because of the state of fine division and the great surface available. Reduction in sensitivity becomes appreciable only when the solubility products of the reagent and reaction product approach the same order. This is naturally avoided in the selection of the reagent.

It is the belief of the authors that the use of reagents of low solubility is somewhat novel in analysis, and that it is rendered practicable through the use of paper as the reaction medium.

Apparatus

The apparatus shown in Figure 4 consists essentially of a microburet, *A*, constructed of thermometer tubing. It has a capacity of 0.05 cc. and is graduated in thousandths. The delivery end is drawn out to a capillary tube which is bent in the form of an inverted U, so as to bring the tip at right angles to the buret axis and in approximately the same plane. The buret is mounted on a panel, *B*, of phenol fiber or similar material, which, in turn, is inclinable, on a suitable stand, at any desired angle from the horizontal to the vertical. A graduated circle shows this inclination. A tightening nut, *C*, secures the panel in the position desired. The paper is held against the buret tip by an adjustable table, *D*, of phenol fiber or hard rubber. A central opening in the table accommodates the wet area of the paper, the buret tip being centered over it.

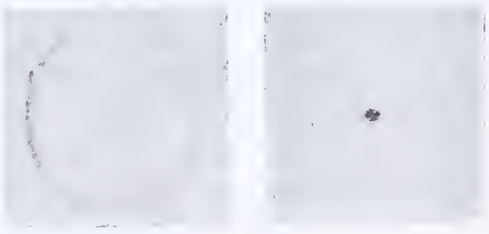

A *B*

FIGURE 3. COMPARISON OF EFFECTS WITH SOLUBLE AND FIXED REAGENTS

0.1γ Fe contained in 0.01 cc. added from capillary buret
A. To $K_4Fe(CN)_6$ paper
B. To $Zn_2Fe(CN)_6$ paper

On the underside, a shallow recess surrounding the opening seats a glass capsule, *E*, which is held in place by a spring clip. By this means gaseous reagents or vapors can be applied conveniently to the paper as the test solution is introduced. The table swings on a pivoting member, *F*, to which it is attached by phosphor-bronze spring straps, *G*. These straps provide the pressure necessary to ensure good contact between the buret

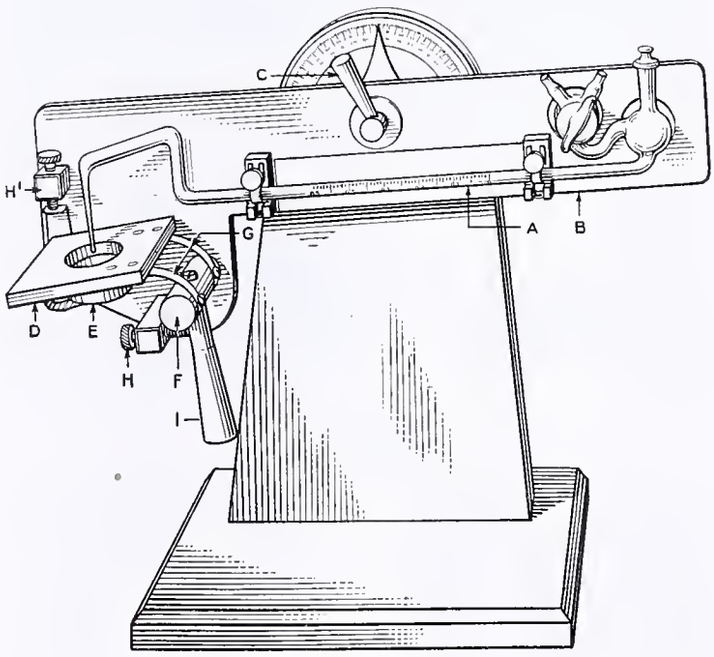

FIGURE 4. CAPILLARY BURET ASSEMBLY

Table I. Comparison of Sensitivities of Spot Test by Feigl and Capillary Buret Methods

Reagent Group or Ion	Ion Detected	Drop Method: Reagent solution	Drop Method: Limit of detectability	Capillary Buret Method: Impregnated paper	Capillary Buret Method: Limit of detectability
			γ		γ
Ferrocyanide	Cu	Potassium ferrocyanide	0.5	Zinc ferrocyanide	0.05
Ferrocyanide	Fe	Potassium ferrocyanide	0.1[a]	Zinc ferrocyanide	0.02
Xanthate	Mo	Potassium ethyl xanthate	0.2	Zinc xanthate	0.01
Dimethylglyoxime	Ni	Dimethylglyoxime	0.16[a]	Dimethylglyoxime	0.005
Chromate	Ag	Potassium chromate	2.0[a]	Zinc chromate	0.1
Diethyldithiocarbamic acid	Cu	Sodium diethyldithiocarbamate	0.2	Zinc diethyldithiocarbamate	0.002
Silver chromate	Cl	Silver chromate paper	0.5	Silver chromate	0.05
Sulfide	Cd	Sodium sulfide	6.3	Zinc sulfide	0.05
p-Dimethylaminobenzalrhodanine	Ag	*p*-Dimethylaminobenzalrhodanine	0.02[a]	*p*-Dimethylaminobenzalrhodanine	0.004

[a] Taken from Feigl (*1*).

tip and the paper, while the nonrigid method of support prevents breaking the tip through jamming the paper against it. The height to which the table can be swung upward is controlled by the adjusting screws, *H* and *H'*, acting against the arm of the pivoting handle, *I*, and the table, respectively. Regulation of pressure against the buret tip is thus obtained.

The buret is filled with the test solution through the tip, a two-way stopcock, communicating with a small bulb at the opposite end, permitting the use of pressure or suction from the laboratory outlets when frequent filling and emptying are necessary. A stoppered tubulation opens the bulb to the air for normal delivery of the buret into the paper. Cleaning liquids and wash water may be introduced into the bulb through the tubulation and expelled through the buret. The buret tip is drawn to a 0.5-mm. orifice and cut off squarely. It should receive a slight fire-polish to round off the cut edges without constriction of the bore.

Use of Capillary Buret. The impregnated reagent paper is placed over the opening in the table, and this is raised until the previously adjusted contact is made with the buret tip. The panel holding the buret, which has previously been filled to the zero mark with the solution under test, is then inclined to the angle that has been experimentally determined to give the optimum rate of flow for the particular test. A measured volume is then allowed to flow from the buret into the paper.

Experimental

Table I shows that the capillary buret method, in combination with the use of paper impregnated with reagents of low solubility, has an increased sensitivity over the drop method of from fivefold to one hundred fold. In Table I the limits of detectability by the drop method in four cases are taken from Feigl (*1*); the others were determined by the authors as follows: A platinum loop containing 0.005 cc. of test solution was brought in contact with Whatman No. 1 paper and the solution allowed to be absorbed. Then a drop of reagent was placed on that spot. As silver chromate is insoluble, the comparison was made in that test by using the loop on the impregnated paper.

A 0.005-cc. drop spreads, in fine-textured, thin paper until an area about 1 cm. in diameter is occupied. In most cases, when the capillary technic just described is used, the total precipitate from such a drop of solution can be confined to an area of 1 mm. diameter, when low concentrations of the ion tested for are used. Figure 5 shows photographs of actual tests.

Discussion

An important advantage of the capillary buret method lies in the control that the operator has over the rate of flow of the test solution into the paper. A prime requirement for restricting to a minimum the area covered by the reaction product is that the rate of flow shall not exceed the rate of reaction. The optimum rate of flow can be experimentally determined for a given test. For the tip orifice and papers used in the authors' experiments, this rate was variable between 10^{-3} cc. per second for the vertical downward position and 5×10^{-5} cc. per second for an upward inclination of 50°, the angle beyond which the column broke.

The test paper can be brought against the capillary tip with little danger of breakage and yet with pressure sufficient to ensure continuous, uniform reproducible flow and freedom from any tendency for the paper to shift. Treatment with various vapors, or even warming of the paper during the test, is facilitated. Finally, the tediousness and uncertainty of carrying out such tests with the unaided hand are avoided. This is particularly desirable in capillary separations.

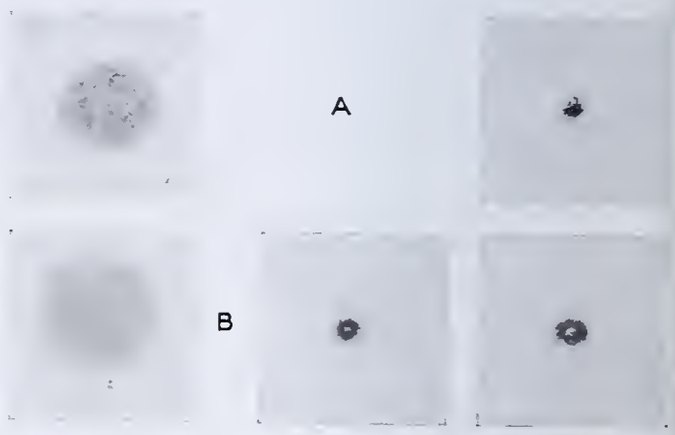

Figure 5. Comparison of Spots by Drop Method and Capillary Buret Method

A. 0.005 cc. containing 0.1γ Cu on zinc diethyldithiocarbamate paper
Left, drop method
Right, buret method
B. 0.005 cc. containing 0.1γ Ni on dimethylglyoxime paper
Left, drop method
Center, buret method, axis inclined 10° upward
Right, buret method, axis inclined 60° downward

The increased sensitivity of spot tests and the separability of substances by capillary flow through paper and fixation of the products therein have been mentioned by Feigl (*2*). No one seems, however, to have fully appreciated the possibilities offered by the use of relatively insoluble reagents precipitated on the paper fibers, or by the precise control of the rate of flow. The authors feel that the improved technic here reported, consisting essentially of the control of variables, lays the groundwork for advancing the qualitative spot test to the status of a method of quantitative microanalysis. In the succeeding papers in this series the subject will be developed in this direction, among others.

Literature Cited

(1) Feigl, F., "Qualitative Analyse mit Hilfe von Tüpfelreaktionen," 2nd ed., Leipzig, Akademische Verlagsgesellschaft M. B. H., 1935.
(2) Feigl, F., and Kapulitzus, H. J., *Mikrochemie*, 8, 239 (1930).
(3) Hahn, F. L., *Ibid.*, 10, 319 (1931).

Received March 30, 1937. Presented before the Microchemical Section at the 92nd Meeting of the American Chemical Society, Pittsburgh, Pa., September 7 to 11, 1936.

Determination of Carbon and Hydrogen

An Electrically Heated, Thermostatically Controlled Constant-Temperature Device for the Pregl C-H Determination

FRANK SCHNEIDER AND H. L. VAN MATER
School of Chemistry, Rutgers University, New Brunswick, N. J.

IT IS well known that in the microanalytical determination of carbon and hydrogen, the lead peroxide portion of the combustion tube filling must be kept at a constant temperature, which must be over 170° or under 200° C. It has been found (*1*) that the higher its temperature, the more rapidly the lead peroxide gives up its retained water, provided that the temperature never exceeds 200° C.

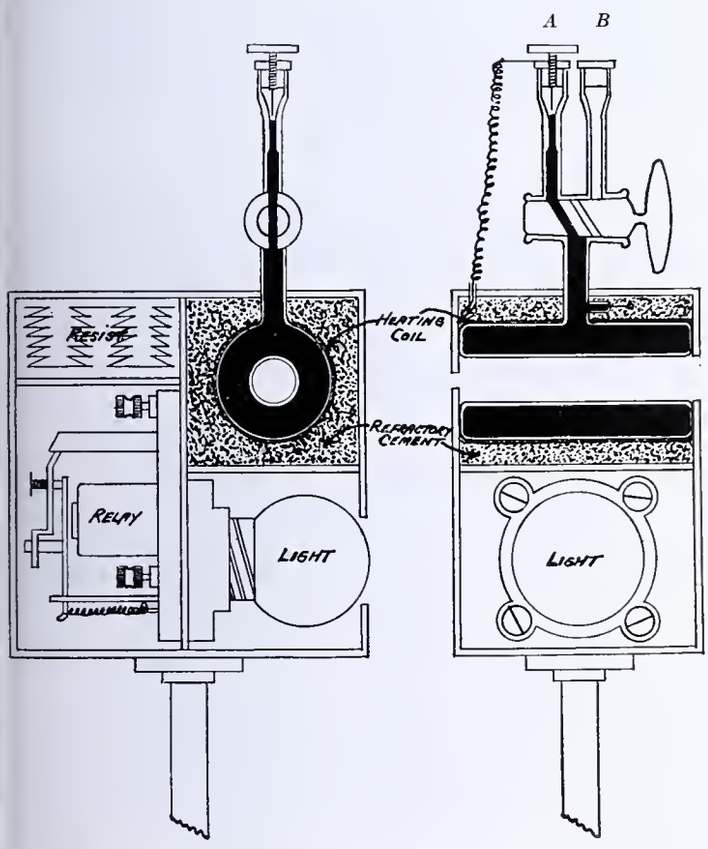

FIGURE 1. DIAGRAM OF APPARATUS

The usual devices employed for this purpose consist of a double-walled metallic or glass tube, the space between the walls being filled with a liquid whose boiling point lies within the range of 170° to 200° C. To this double-walled tube is attached a reflux air condenser. The temperature inside the tube is maintained constant by keeping the liquid boiling by means of a small gas flame.

This type of apparatus has numerous disadvantages. There is first the mechanical difficulty of making the apparatus leakproof, which has been overcome to some extent by the constant-temperature device of Verdino (*2*).

Another difficulty arises from the fact that cymene and decalin, usually employed as boiling liquids, always polymerize and form gummy deposits that prevent proper heat transfer from the flame to the liquid and make frequent adjustments of the gas flame necessary. They also cause superheating. Moreover, it is impossible to determine the amount of liquid remaining in the all-metal apparatus and to observe if even boiling is being maintained.

The all-glass device of Schoebel makes it possible to observe the liquid in the system and minimizes leakage at the junction between the double-walled vessel and condenser. The tendency to gum is lessened (gumming is retarded, although not eliminated), since the metallic surfaces, which apparently catalyze the polymerization, are eliminated. However, this device still requires careful regulation of the gas flame and necessitates the use of bits of porous tile, etc., to ensure quiet boiling.

The authors have attempted to overcome these difficulties by electrical heating and thermostatic control of the electric current.

Their apparatus consists of a double-walled tube of glass, as in the Schoebel device. The condenser is replaced by a three-way stopcock and capillary tube, as shown in Figure 1. The double-walled tube is filled with mercury through tube *B*, the mercury acting both as heating medium and as its own thermoregulator. Contact is made and broken in capillary tube *A*, as in the familiar thermoregulator. Tubes *A* and *B* are fitted with hard-rubber stoppers, the one in *A* carrying a screw attached to the platinum wire contact for fine adjustment of temperature. The circuit is completed by means of a platinum wire fused into the tube.

The double-walled tube is wrapped with asbestos paper and then wound with about 6.5 meters (20 feet) of No. 24 Nichrome wire and the whole is encased in refractory cement. The tube, thus insulated, together with an external resistance, relay, and light bulb, is enclosed in an asbestos board case.

The function of the external resistance is to slow down the rate of heating. The refractory cement retains the heat so well that, if the heating circuit is connected directly to the winding on the double-walled tube, the temperature continues to rise for a time even after the current has been cut off. This prevents sharp control of the temperature.

The lamp, which is placed in series with the magnet circuit of the relay, acts as a resistance and indicates that the apparatus is functioning.

A Dunco Midget relay is used, since both the magnet and heating circuits operate on 110 volts and its compactness allows it to be easily fitted into the asbestos case.

The apparatus may be set for any temperature desired, as suggested by Saschek, and will easily maintain that temperature within ±0.5° C. It is entirely automatic and needs only to be plugged into the 110-volt line.

Since the boiling liquid has been eliminated, all the disadvantages encountered in the previous types of apparatus have been overcome.

Literature Cited

(1) Saschek, William, private communication.
(2) Verdino, *Mikrochemie*, 4, 123 (1931).

RECEIVED February 16, 1937. Presented before the Division of Physical and Inorganic Chemistry, Symposium on Recent Advances in Microchemical Analysis, at the 89th Meeting of the American Chemical Society, New York, N. Y., April 22 to 26, 1935.

Micro-, Semimicro-, and Macrodetermination of Halogens in Organic Compounds

WILLIAM H. RAUSCHER, Rensselaer Polytechnic Institute, Troy, N. Y.

A qualitative test to distinguish between reactive and unreactive halogen in organic compounds has been developed.

Two procedures for the quantitative determination of organic halogen have been developed. Method I is general for all types of organic chlorides, bromides, or iodides with the exception of the very low-boiling compounds with firmly held halogen. Method II is, in general, suitable only for the aliphatic or reactive compounds. Either method may be used on a micro, semimicro, or macro scale. There is no essential difference in method, regardless of scale.

The author is extending the method to include the determination of fluorine in organic combination and the estimation of aliphatic halogen in the presence of aromatic halogen. Investigation of the mechanism of the reaction and of the organic products obtained is under way, as well as the use of the ethanolamines in other analytical procedures.

AS A MODIFICATION of the Stepanow method for the determination of halogens in organic compounds (*12*), several investigators (*5, 6, 7, 11*) have suggested the substitution of higher boiling alcohols for the ethyl alcohol used by Stepanow and by others (*1–4, 13*) who have extended his method. Other workers (*8, 9, 10*) recommend diluting the alcohol with benzene, xylene, kerosene, or other inert solvent to avoid loss of volatile compounds such as carbon tetrachloride.

It occurred to the author that one of the ethanolamines might be used as a high-boiling alcohol in a Stepanow method for the determination of organic halogen. The ethanolamines are not only high-boiling, but readily soluble in water, cheap, and easily purified for the purpose at hand. Monoethanolamine, because of its lower viscosity, was chosen for investigation. It reacts at a slow rate with sodium in the cold, and the rate of reaction is increased very materially by raising the temperature. The reaction rate may be made moderate at high temperature by dilution with dioxane, which is soluble in both water and ethanolamine. Monoethanolamine will dissolve aliphatic halogen compounds, at least in the amounts required for the analytical procedure which has been developed, but it has an inferior solvent action on the aromatic halogen derivatives. Dioxane is very useful here for bringing the aromatic substance into solution. In addition monoethanolamine itself was found to be a powerful reagent for converting halogen in aliphatic combination to the ionic form, whereas it is entirely without action on the usual type of aromatic halogen derivative. Activated aromatic halogen, such as that found in 2,4-dinitrochlorobenzene is, however, easily converted to the ionic form.

It has been found possible to develop a simple qualitative test to distinguish aliphatic or reactive halogen from aromatic or firmly bonded halogen using monoethanolamine, and to develop general methods for the quantitative determination of halogens in many types of organic compounds on a micro, semimicro, and macro scale. Two methods have been developed. By Method I all halogen compounds investigated, with the exception of the low-boiling *s*-dichloroethylene, can be readily analyzed on any of the above-mentioned scales. Method II is satisfactory only for the aliphatic or activated halogen derivatives. By this second method even the very volatile aliphatic compounds, such as *s*-dichloroethylene, may be analyzed with ease on any of the above-mentioned scales. Some aromatic compounds may also be analyzed by Method II, but only a few respond successfully. The apparatus has been kept very simple and inexpensive, and the procedure simple and rapid. Gravimetric methods were employed for all analyses.

As shown by Table I, the method was applied to a group of aliphatic and aromatic compounds selected because of the variety of difficulties presented.

Method I. Micro and Semimicro Scale

MATERIALS. The monoethanolamine was distilled at atmospheric pressure. As purchased, considerable amounts of organic halogen are present in the dioxane. This is effectively removed by refluxing several hours with sodium and monoethanolamine and then distilling. The distillate contains monoethanolamine but there is no need to remove it. The sodium is halogen-free.

APPARATUS. The apparatus for the digestion of the sample, as shown by Figure 1, consists of a 25 × 200 mm. Pyrex test tube and a 20-mm. outside diameter cold finger. The surrounding jacket, attached to the tube by a rubber stopper, is used only for low-boiling substances, and is packed with ice and salt.

An alternative apparatus, which is also very satisfactory and simple, is a 50-ml. pear-shaped Pyrex acetylation flask and condenser tube with a 24/40 ₮ ground joint. The condenser tube is provided with a Liebig jacket.

For some high-boiling liquids and solids, which form no volatile partially dehalogenated products, the condenser in Figure 1 may be omitted if the process is carefully watched.

METHOD OF WEIGHING SAMPLES. Nonhygroscopic solids and high-boiling liquids are weighed in small open bottles made by cutting down specimen vials 8 to 10 mm. in diameter. Solids are introduced into the weighing bottle by means of a small spatula. Liquids are introduced by means of a capillary pipet made by drawing down capillary tubing of 1-mm. inside diameter. Liquids boiling from 75 ° to 120° C. are best weighed in glass-stoppered vials of about 0.25-ml. capacity, such as are used in the Victor Meyer method for molecular weights. These are supported on the balance pan by a frame made from sheet aluminum. Substances boiling below 75° C. are weighed in the same vials containing about 0.1 ml. of monoethanolamine. Substances boiling as low as 38° C. may be handled thus.

Table I. Results by Micro-, Semimicro-, and Macromethods

Compound	Sample	Method	Halogen Found	Halogen Theory
	Mg.		%	%
Ethyl bromide	21.014	I	73.21	73.35
	25.224	I	73.25	
	178.70	I	73.43	
	160.25	I	73.34	
s-Dichloroethylene	14.239	II	73.24	73.16
	9.384	II	73.16	
	164.70	II	73.14	
	204.05	II	73.18	
Chloroform	14.315	I	88.96	89.10
	8.801	II	89.11	
	164.75	I	88.99	
	141.20	II	89.08	
Carbon tetrachloride	14.010	I	92.07	92.20
	25.739	I	92.25	
	153.80	I	92.33	
	145.25	II	92.00	
Ethyl iodide	16.159	II	81.46	81.38
	21.082	II	81.48	
Ethylene chloride	28.305	I	71.72	71.67
	27.730	I	71.60	
Propylene chloride	14.796	II	62.74	62.78
	16.206	II	62.70	
n-Butyl bromide	22.673	I	58.23	58.34
	115.75	II	58.29	
	122.20	I	58.36	
n-Amyl bromide	9.519	I	52.99	52.92
	15.050	I	52.87	
	109.70	I	52.94	
	178.35	I	53.04	
	203.65	II	52.86	
Tetrachloroethylene	15.998	II	85.70	85.53
	6.826	I	85.62	
	136.25	I	85.65	
	252.45	II	85.46	
Ethylene chlorohydrin	29.200	I	44.11	44.05
	16.050	I	44.06	
Ethylene bromide	6.099	I	85.17	85.08
	24.590	I	85.28	
Acetylene tetrachloride	4.773	I	84.46	84.50
	10.069	I	84.55	
	208.95	I	84.41	
	119.40	II	84.52	
Cyclohexyl bromide	33.190	I	49.13	49.03
	24.020	I	49.00	
β,β′-Dichlorodiethyl ether	18.860	II	49.47	49.60
	22.201	II	49.59	
	117.75	I	49.38	
	121.00	I	49.55	
n-Heptyl bromide	5.955	I	44.62	44.64
	21.940	I	44.44	
Benzyl chloride	27.591	I	27.99	28.03
	25.245	I	28.09	
α-Butylene bromide	10.430	II	73.94	74.03
	18.433	II	73.90	
γ-Chlorobutyronitrile	22.27	II	34.24	34.25
	1.440	I	34.20	
	215.60	I	34.22	
	173.60	I	34.21	
Ethylene iodide	15.946	I	89.96	90.06
	36.043	I	90.33	
p-Nitrobenzyl bromide	43.904	I	89.96	37.00
	19.943	I	37.06	
Iodoform	11.960	I	96.79	96.70
	36.470	I	96.61	
Hexachloroethane	0.465	I	89.90	89.86
	1.560	I	89.88	
	24.401	II	89.74	
	7.150	II	89.85	
	229.10	I	89.93	
	133.90	II	89.80	
Hexabromoethane	23.136	I	95.34	95.23
	11.178	I	95.34	
	12.504	I	95.19	
p-Phenylphenacyl bromide	12.400	I	29.00	29.06
	13.416	II	28.88	
	14.762	II	28.95	
Chlorobenzene	25.187	I	31.56	31.52
	28.044	I	31.50	
	138.20	I	31.40	
	150.65	I	31.49	
Bromobenzene	20.197	I	50.85	50.92
	31.048	I	50.86	
	143.80	I	50.86	
	185.70	I	50.97	
o-Chlorotoluene	18.603	I	27.95	28.03
	15.550	I	27.92	
Iodobenzene	25.143	I	62.29	62.22
	18.263	I	62.16	
	181.35	I	62.32	
	260.85	II	62.21	
	205.35	II	62.03	
o-Chloroaniline	28.925	I	27.87	27.81
	26.865	I	27.80	
o-Iodotoluene	16.269	I	58.38	58.23
	19.841	I	58.30	
α-Bromonaphthalene	17.137	I	38.60	38.61
	24.111	I	38.56	
	183.35	I	38.61	
	182.05	I	38.69	
	181.45	II	38.62	
p-Bromodimethylaniline	16.187	I	40.03	39.96
	22.200	I	39.87	
	19.129	I	39.98	
p-Bromotoluene	19.467	I	46.70	46.74
	24.256	I	46.80	
2,4-Dinitrochlorobenzene	30.726	I	17.38	17.51
	36.786	I	17.38	
	45.44	I	17.53	
2,5-Dichloroaniline	19.526	I	43.74	43.78
	21.725	I	43.70	
p-Dichlorobenzene	22.183	I	48.28	48.26
	6.512	I	48.19	
	197.95	I	48.27	
	155.00	I	48.21	
Picryl chloride	28.621	I	14.29	14.33
	19.975	I	14.26	
p-Dibromobenzene	28.030	I	67.77	67.77
	33.999	I	67.62	
	152.80	I	67.70	
	148.55	I	67.63	
Tribromoaniline	20.165	I	72.52	72.70
	14.467	I	72.70	
	12.943	I	72.62	
Tetrachlorophthalic anhydride	12.677	II	49.50	49.62
	29.286	I	49.40	
Hexachlorobenzene	13.894	I	74.61	74.74
	4.597	I	74.51	
	140.10	I	74.71	
	133.60	I	74.65	
p-Bromoacetanilide	26.315	I	37.34	37.34
	27.752	I	37.38	
o-Chlorodiphenyl	10.060	I	18.77	18.81
	160.20	I	18.78	
p-Bromodiphenyl	5.596	I	34.37	34.30
	4.276	I	34.24	
	109.50	I	34.37	
Sodium *p*-chlorobenzenesulfonate	10.099	I	16.54	16.53
	88.35	I	16.48	
Sodium *p*-chlorotoluenesulfonate	20.621	I	15.65	15.51
	104.20	I	15.62	
p-Chlorobenzonitrile	3.756	I	25.90	25.87
	52.50	I	25.84	
α-Ethyl-α-phenyl-γ-chlorobutyronitrile	1.216	I	17.17	17.08
	10.402	I	17.13	

Procedure. The weighing bottle containing the sample is allowed to slide gently down the side of the inclined 25 × 200 mm. test tube or acetylation flask, after first removing the glass stopper, if a glass-stoppered vial is used. A volume of 3 to 4 ml. of monoethanolamine is added and, if necessary, enough dioxane to bring the sample into solution. As much as 3 ml. of dioxane has been used in some cases, although this is more than is needed to dissolve the sample. One-half to 1 ml. of dioxane is desirable in any case to retard the action of the sodium and to provide a low-temperature reflux to keep the condenser washed down. A 0.2-gram piece of clean sodium is added and the condenser is attached.

If the sample is a high-boiling liquid or a solid, the contents of the tube or flask are heated rapidly to boiling with a microburner flame, the tip of which just touches the vessel to be heated. Currents of hot air along the test tube can be deflected by placing a disk of asbestos paper at about the level of the bottom of the cold finger. Refluxing is continued for 30 minutes, with frequent shaking. The surface of the ethanolamine usually becomes covered with a fairly tough froth which is not easily broken by shaking. If all the sodium disappears during the half-hour reflux, another piece of the same weight is added. For low-boiling liquids, the tube contents are heated only enough to cause the sodium to react moderately with the ethanolamine. The reaction is allowed to proceed at this moderate rate for about 15 minutes, and then the contents are refluxed for another 15 minutes or longer as desired. Solids and some high-boiling liquids, both aromatic and aliphatic, may be decomposed without using the condenser.

At the end of the half-hour heating period, the tube is allowed

to cool well below 100° C. before adding a few drops of water to decompose excess sodium. The condenser is then washed down with about 5 ml. of water. The tube is further cooled in running tap water by placing it in a beaker through which a current of water is passing. The ethanolamine and sodium compounds are then neutralized with concentrated nitric acid added drop by drop from a buret, using litmus as an outside indicator. During the neutralization the tube may be left immersed in a beaker of cold water to aid in the absorption of the large heat of neutralization. More care must be exercised with bromides and iodides. A large excess of nitric acid should be avoided if heat coagulation of the silver halide is to be employed. After neutralization, the tube is examined for turbidity due to insoluble reduction products such as are obtained from halogen derivatives of naphthalene, diphenyl, and similar compounds.

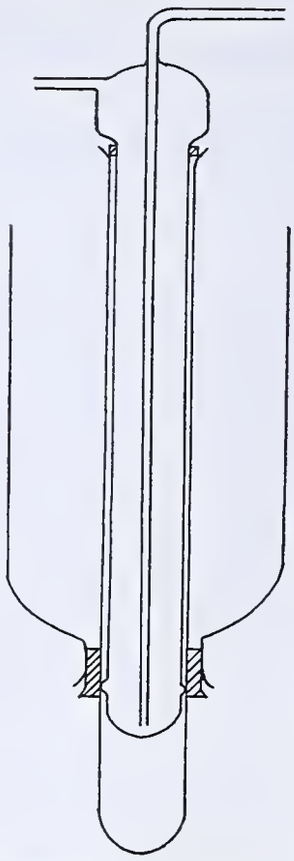

Figure 1. Digestion Apparatus

If heat coagulation is not to be used, the turbidity may be brought into solution by the use of alcohol or other organic solvents. When heat coagulation of the silver halide is to be employed, the presence of alcohol or other low-boiling solvent is very undesirable. If heat coagulation is to be used, or in any case if desired, the turbidity is removed by filtration. For very rapid filtration without loss of material a microhalogen filtration tube with a thick asbestos mat is placed through one hole of a two-holed rubber stopper in another 25 × 200 mm. test tube. By using the siphon tube of the standard Pregl filtration apparatus and applying suction to the other hole of the rubber stopper, the filtration may be carried out with rapidity and with minimum rinsing of the digestion tube, siphon, and filter tube. Water or 1 to 100 nitric acid is used for rinsing. When acetylation flasks are used for the digestion and it is necessary to remove turbidity by filtration, it is best to filter into a 25 × 200 mm. test tube. Filtration and rinsing can be done in about 2 minutes.

An excess of 10 per cent silver nitrate solution is added drop by drop to the filtrate and the silver halide is then coagulated by heating in boiling dilute permanganate solution according to the standard procedure. It was found, however, that coagulation could be brought about very rapidly and thoroughly in the cold by spinning for a few minutes. The spinning was accomplished by clamping a stirring motor to a stand so that the shaft was vertical, and placing a one-hole rubber stopper of proper size on the shaft. The test tube was hung from the stopper and guided at its lower end by a small clamp with cork-covered jaws slightly moistened with oil. The speed of the motor, which was controlled by a slide-wire rheostat, was such that the forced vortex was kept well below the rubber stopper. Even 1 mg. of silver halide may be coagulated effectively in a few minutes in this manner. Any particles of silver halide left sticking to the upper wall of the test tube are easily washed down with alcohol before filtration. The pear-shaped acetylation flasks may likewise be spun, but are best guided and braked with the fingers.

After coagulation and cooling (if necessary) filtration is performed immediately, using the usual Pregl procedure. No trouble is experienced in removing silver halide found inside the weighing bottles. The alcohol and dilute nitric acid washing removes these particles very effectively. All weighing vials used were of such diameter that the siphon tube may be slipped inside them. Quickest results are obtained in weighing the filter tubes if they are thoroughly wiped before the drying process and then not wiped again before weighing. Otherwise static charges from the wiping are very troublesome.

Where no sodium is used in the treatment of the sample, considerable trouble with bumping of the ethanolamine can be expected. The use of three to four platinum tetrahedra, as recommended by Pregl for his ebullioscopic molecular weight micromethod, is surprisingly effective for preventing this bumping.

Method I. Macro Scale

Materials. Exactly the same materials are used as in the micro- and semimicromethod.

Apparatus. Pear-shaped Pyrex acetylation flasks of 125- to 250-ml. capacity with condenser tube and 24/40 ₮ ground joint are used.

Method of Weighing Samples. The samples are weighed in the same weighing bottles as in the micromethod. Light, bulky, powdery solids are best handled on the macro scale in the form of pellets. These are easily made and handled in glass tubing of 4-mm. inside diameter using two tightly fitting glass rods with square-cut ends to press the powder into the form of pellets. Very firm pellets may be made in this way without the use of an expensive pellet press. After forming the pellet in the tube, the outside of the tube is wiped off and the pellet pressed into the weighing bottle with one of the glass rods. Liquids are handled exactly as in the micromethod.

Procedure. The same general procedure is followed as in the micro work. A volume of 10 ml. of ethanolamine and 5 to 10 ml. of dioxane are used. The amount of sodium is increased to 2 grams, and this is added in two portions of several pieces each. In general, the total reaction time is extended to 1 hour. Turbidity on neutralization is removed as in the previous method. Either type of coagulation procedure may be employed. The silver halide may be automatically transferred to a crucible as in the micromethod. Glass crucibles with 1G3 sintered-glass disks and thick asbestos mats are very satisfactory. Figure 2 shows the filtering device by which the silver halide is rapidly and automatically transferred to the crucible. The alcohol and dilute nitric acid washing is very effective in removing the last trace of precipitate from the walls of the acetylation flask. The usual drying procedure is followed. In both the micro- and macroprocedures brownish colors appear with some compounds but do not affect the analyses.

Method II. Micro and Semimicro Scale

All aliphatic compounds may be analyzed by a second procedure which is particularly valuable for the very volatile compounds, but only a few aromatic compounds were successfully treated by this procedure. It involves heating the sample with a solution of sodium in monoethanolamine in small sealed tubes.

Materials. A solution of 1.5 grams of sodium in 50 ml of monoethanolamine. Commercial, unpurified diethanolamine.

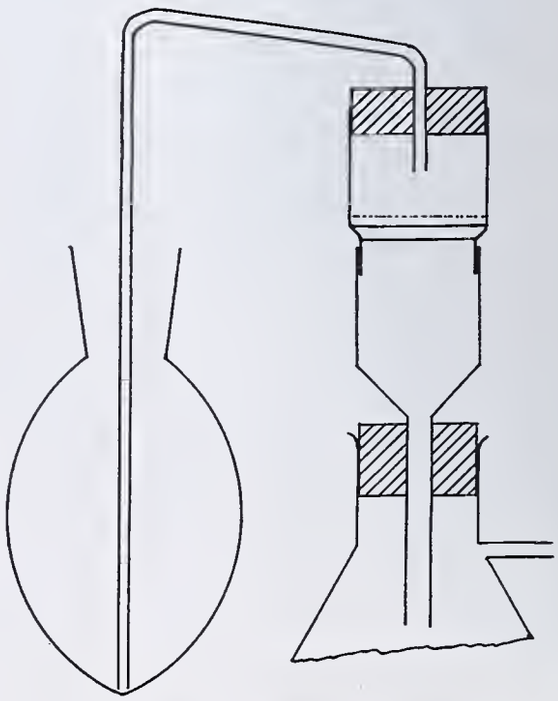

Figure 2. Filtering Device

Apparatus. The bomb tubes used are 3 × 0.375 inch bacteriological weight culture tubes or 10 × 75 mm. Pyrex test tubes. Both are perfectly satisfactory, although the Pyrex tubes are more troublesome to open. The bomb tubes are heated in a bath of boiling diethanolamine contained in a 32 × 300 mm. Pyrex test tube; smaller test tubes for heating baths can be used, if it is desired to heat only one bomb tube at a time. For protection in case of failure of a bomb tube, the bath tube is wrapped in wire gauze and asbestos paper. The bomb tubes are placed in the heating bath in a Nichrome or nickel-gauze cylindrical basket which slides readily into the bath tube. This basket is raised and lowered by a Nichrome wire and the boiling diethanolamine is condensed by a cold finger. Figure 3 illustrates the apparatus.

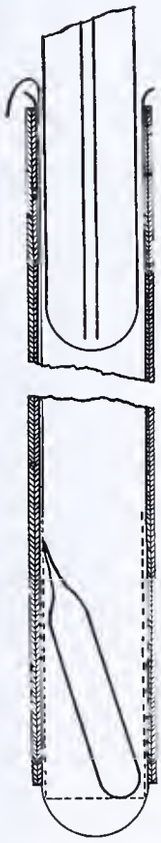

Figure 3

Method of Weighing Samples. All samples are weighed directly into the bomb tube, which is suspended from the hook of the microbalance by means of a cork and aluminum wire hook thrust through the cork. The bomb tubes weigh approximately 5 grams. Liquids are allowed to drop directly from the previously described micropipets onto the bottom of the tube. Solids are introduced most easily in the form of pellets prepared as previously described. For microsamples the diameter of the pellet tube may be reduced to any desired size.

Procedure. After the sample is weighed, 1 ml. of the sodium in ethanolamine solution is added from a 1-ml. Mohr pipet. The tube is next sealed as in the Carius method; the sealing is very easy and should require little practice. The culture test tubes are thick-walled and of small diameter and may be sealed with great ease. A fairly good capillary is desirable but not essential. After cooling, the tube is placed in the wire basket which is slipped into the bath tube. The heating bath liquid is commercial diethanolamine, boiling at about 268° C. The bath may be boiling when the basket of tubes is inserted, although it is much safer if it is at room temperature. The bomb tubes are heated for 0.5 hour after the diethanolamine has been brought to boiling, after which the cold finger is raised and the basket lifted from the bath liquid for about 10 minutes in order to cool. It is then removed from the bath tube by the wire, placed in a towel-lined beaker, and allowed to cool another 10 minutes. A towel may be thrown over the basket as it comes out of the bath tube to protect the operator against tube failure. A failure has never occurred, however, following the above procedure. The basket is finally cooled in running tap water in a beaker if the work is to be continued immediately, or the tubes may be allowed to stand indefinitely. If desired the tubes may be allowed to cool to room temperature in the bath tube, but this takes considerable time.

After thorough cooling, the tube is opened. The very end of the tube is warmed slightly to drive down any ethanolamine, and then, by applying a very small flame from the blast lamp to the tip of the capillary, the moderate pressure in the tube is allowed to release itself gently by blowing out the glass. The tube is next cut off about 1.5 cm. from the end, using a hot rod. This is exceedingly simple with the culture tube, as the glass cracks easily. The upper portion is placed on a piece of paper until it is rinsed out. During the opening process the bomb tube may be wrapped in a towel to avoid danger of failure, although failure has never occurred. The contents of the bomb tube are next transferred to a 25 × 200 mm. Pyrex test tube. This is most satisfactorily done by the filtration method used to remove insoluble material described in Method I. The bomb tube is nearly filled with water, which is sucked over into the test tube, and the tube and siphon are washed with three 1-ml. portions of water. The tip, which had been cut from the bomb tube, is likewise rinsed out, the hole in the capillary causing no loss of wash liquid. The filter tube is finally washed with 1 ml. of water. The total volume is thus kept small. About 2 minutes are required for the transfer. Glass splinters which might be formed in cutting the tube are removed in the filtration. From this point the procedure exactly follows Method I.

The use of a stronger solution of sodium in ethanolamine is not recommended, as enough pressure often develops in the tubes to cause failure when in the boiling bath. For many and perhaps all, aliphatic compounds, ethanolamine alone may be used. Such compounds as chloroform, carbon tetrachloride, acetylene tetrachloride, tetrachloroethylene, *s*-dichloroethylene, and even hexachloroethane have been successfully analyzed without use of sodium. No pressure is found in the bomb tubes after cooling to room temperature; in fact a slight negative pressure is usually observed.

Various colors develop with different compounds in the bomb tube method. These may change with acidification, but never cause trouble.

Macromethod II

The procedure is exactly the same as that used in the micromethod except that 13 × 100 mm. Pyrex test tubes are used for the bombs, and the amount of sodium in monoethanolamine solution or monoethanolamine is increased to 4 ml., and the heating time to 1 hour. Test tubes (25 × 200 mm.) are always used for the coagulation of the silver halide, even on the macro scale. The total volume may be kept not greater than 30 ml. In many cases the microfiltration tubes may be used on the macro scale if the amount of silver halide is not over 100 to 150 mg.

Qualitative Test for Reactive Halogen

To about 0.1 gram of the substance in a 25 × 200 mm. test tube add 1 to 2 ml. of monoethanolamine. Boil over a burner for about 2 minutes with constant shaking to avoid bumping. Allow the contents to cool, dilute with about 4 ml. of water, and carefully neutralize with concentrated nitric acid. If a turbidity appears, dissolve it in a little alcohol after cooling again. Add silver nitrate solution. The amount of compound to be tested should be kept down to 0.1 gram, as a vigorous reaction generating enough heat to throw out the contents of the tube may result with some compounds.

Literature Cited

(1) Bacon, *J. Am. Chem. Soc.*, **31**, 49 (1909).
(2) Cook and Cook, Ind. Eng. Chem., Anal. Ed., **5**, 186 (1933).
(3) Drogin and Rosanoff, *J. Am. Chem. Soc.*, **38**, 711 (1916).
(4) Duin, van, *Rec. trav. chim.*, **45**, 363 (1926).
(5) Favrel and Bucher, *Ann. chim. anal. chim. appl.*, **9**, 321 (1927).
(6) Kimura, *J. Soc. Chem. Ind. Japan, Suppl. binding*, **37**, 589 (1934).
(7) Kimura, *Ibid.*, **37**, 590 (1934).
(8) Landis and Wickmann, Ind. Eng. Chem., Anal. Ed., **2**, 394 (1930).
(9) Maryott, *Chem. News*, **103**, 1 (1911).
(10) Miller and Johnson, *J. Colo.-Wyo. Acad. Sci.*, **1**, No. 1, 55 (1929).
(11) Palfray and Sontag, *Bull. soc. chim.*, **47**, 118 (1930).
(12) Stepanow, *Ber.*, **39**, 4056 (1906).
(13) Walker and Rae, *J. Am. Chem. Soc.*, **33**, 598 (1911).

Received March 27, 1937. Abstract of part of the Ph.D. dissertation of William H. Rauscher in the Graduate School of Rensselaer Polytechnic Institute.

A Microchemical Balance Room

W. R. KIRNER, Coal Research Laboratory, Carnegie Institute of Technology, Pittsburgh, Pa.

The construction of the microchemical balance room of the Coal Research Laboratory of the Carnegie Institute of Technology is described, as well as the methods used for dust removal, vibration-free mounting of the balances, heat-free illumination, and humidity and temperature control. Microbalances installed in this way in such a room need to be cleaned and serviced less frequently and have a longer life. Zero-point changes (at least in case of the Starke-Kammerer balance used by the author) are small (about 5γ) in the interval from morning to night. Weighings can be made with higher precision and accuracy, with less difficulty, and hence with greater speed.

SINCE its inception, over 5 years ago, the balance room of the microanalytical laboratory of the Coal Research Laboratory of the Carnegie Institute of Technology has undergone a gradual evolution. This article, describing the balance room as it now exists, is written with the hope that other microanalysts may find some of the features described here of use in connection with their balance rooms.

When this microanalytical laboratory was first organized, the single Kuhlmann balance then in use was merely placed in one corner of the laboratory. It was mounted on a heavy, solid balance table with a 2.5-cm. (1-inch) Transite top fitted with gas-pipe legs which stood on the floor and away from the wall; the entire top of the table was covered with a steel cabinet provided with glass top, sides, and a counter-weighted sliding-front glass door which could be moved up and down smoothly without setting up excessive vibrations. By use of this type of table the balance was well protected from dust. However, after the balance had been in use about a year and a half it began to exhibit signs of failure; successive readings showed considerable damping and even zero-point readings were no longer reproducible, so that the balance finally had to be returned to its maker for repairs.

The above experience is not unlike that reported by Furter (4) who found that vibrations set up by a street car, passing outside the laboratory in Utrecht, caused the failure of a Kuhlmann balance after only 4 weeks' use and just after having been completely overhauled, including a repolishing of the knife edges by Kuhlmann. The vibrations in this case must have been unusually severe to cause failure after so short a time. A support, such as described below, would undoubtedly have greatly ameliorated the difficulty.

After receiving the author's balance for repairs, Kuhlmann, in a private communication, remarked on the fact that the metal parts of the balance were covered with a black "coal dust" deposit and that the knife edges needed sharpening. Presumably, the abrasive character of the deposit, coupled with the considerable vibration always present in the laboratory, led to a rapid deterioration of the sensitive parts of the balance. The black "coal dust" deposit found on the balance is characteristic of the atmosphere of industrial localities, particularly during the winter months. It might also be due to finely divided cinder particles, since there is a cinder road and parking lot just outside the laboratory window; in the summer each automobile passing over this road on a dry day sends up a cloud of this dust, some of which enters the laboratory. The vibration problem is also serious; the analytical laboratory is located on a reinforced concrete–steel balcony and, when doors are slammed, shop motors are running, or people mount the stairs outside the laboratory, the vibrations are plainly felt. In addition to this there is a materials-testing laboratory in a large room adjoining the laboratory in which steel, concrete, and other building materials are broken on the testing machines with the production of strong vibrations.

As a result of the failure of the author's first Kuhlmann balance, considerable thought was given to the question of the balance room so as to avoid a repetition of this trouble. The balances were, first of all, placed in a separate room isolated from the general laboratory and means were found which avoided, to a large extent, the difficulties due to abrasive dust and vibration. At the same time suitable methods of illumination as well as constant temperature and humidity control were developed which were entirely absent in the original location of the balance. Despite the severity of local conditions, the three microbalances now on hand and housed in the balance room described below continue to function satisfactorily after from 3 to 4 years of constant use.

The Balance Room

The balance room proper is a room 10 × 6 × 11 feet. One end and one side are made up of solid concrete walls, while the other end and side are of steel construction with glass windows with a 27-inch door entering at one end and a 3-foot door at the center of one side. The doors are provided with pneumatic door checks so that they close silently, gently, and without slamming and hence do not cause any appreciable vibrations. The steel and glass portions of the room are tightly fitted and calked so that, with the doors closed, there are no openings into the laboratory, other than through the ventilating system and perhaps in the small spaces around the doors. Two balances are mounted on a table like that already described, which occupies a place near the side concrete wall, while the third balance is placed on a similar table near the end concrete wall. Suitable small tables are placed adjacent to the balance tables to hold absorption tube stands, chamois and flannel dishes, sample tubes, and similar accessories.

Dust Removal

Since the failure of the Kuhlmann balance can be more or less directly ascribed to the action of abrasive dust on the knife edges and agate bearings, it was necessary to remove this hazard as completely as possible. This was done by filtering the air which enters the balance room. A small electrically operated air blower was installed in the end of the balance room just below the ceiling. The air from the laboratory which passed through the blower and into the balance room was made to traverse a cylindrical filter, 45 cm. long × 25 cm. in diameter (18 × 10 inches) filled with sections of cotton separated from each other by layers of wire gauze and cheesecloth. The volume of air which enters is not sufficient to create noticeable drafts but puts the air in the balance room under a slight pressure, so that leakage of air tends to be out of the room rather than into it. Since the installation of this

tering device, the improved cleanliness of the balance room s been marked. The cotton filter is renewed about every 6 onths and the amount of dust and dirt removed from the air clearly shown by the contaminated condition of the filter ctions.

Vibration Absorption

With the major part of the dust removed from the balance om atmosphere, the next problem was to find a method of ounting the balance so as to sorb most of the vibrations thin the room.

The question of a proper ounting for a microchemical lance seems to have received latively little attention. egl (*9*) stresses the impor-nce of the proper setting up the balance, but both he d Emich (*2*) merely recom-end mounting it on a marble b which is supported by n brackets attached to the ll, with lead sheet as vibra-n insulation between the iron acket and the slab. Such a vice might suffice for rela-vely vibration-free locations, t it is of little help in loca-ns subjected to strong vi-ations. Weygand (*12*) states at a mounting just as good a marble, wall-supported ble consists in standing the lance on any solid wooden ble, provided the floor ards of the room do not brate. (From the author's experience, such a setup, at ast on a concrete floor, is likely to lead to trouble.) He, as ell as Friedrich (*3*), cautions against setting up the balance the vicinity of vibrating machines. Besides using Pregl's d-sheet insulators, Boëtius (*1*) recommends putting a rubber opper 1 cm. thick under each of the metal disks in which e feet sit. Gorbach (*5*), in an excellent and very complete mmarizing article dealing with the microbalance, adds tle to the above information regarding the proper vibration-ee mounting of the balance. In the case of concrete build-gs, Roth (*10*), commenting on the use of wall supports, ints out that vibrations caused by machines are transmitted rough the walls and, if a Pregl-Emich type of mounting is ed, into the iron wall support and thence to the balance. He ims that such vibrations are completely avoided by sup-rting the balance on a table which is not in contact with the ll. The legs of the table are made of two heavy concrete llars (25 cm. wide × 60 cm. deep) mounted on masonry undations. Between the floor and the foundations, as well between the concrete supports and the marble top, are aced several thicknesses of 1.5- to 2-mm. lead sheet. Roth ims that such a support has most excellently protected the lance against vibrations of all sorts. He cautions against ing rubber or cork insulators in place of lead sheet, because e then has a support unstable to pressure or nonuniform ading which may cause zero-point changes.

In this laboratory attempts were first made to mount the tire balance table on a rubber vibration-free supporting stem, but such a system was found to be too unstable. It came obvious that a practical mounting would have to be a mpromise between complete vibration absorption and a able system. A system which would completely absorb all vibrations—e. g., a Julius suspension—becomes too unstable for use under the conditions imposed—namely, the necessity of releasing and arresting the balance while on the suspension. On the other hand, too stable a system permits too much vibration to be imparted to the balance.

The answer to the problem was found in an article by Howard (*8*) in which various supporting and suspension systems were constructed and both the imparted horizontal and vertical vibrations were measured by means of a seismographic instrument and recorded on a kymograph. The effectiveness of the various systems in absorbing vibrations is clearly shown by the kymograph records. In the case of simple layers of insulators such as rubber, felt, and cork only qualitative comparisons were made by noting the degree of agitation of a mercury surface, but Howard states that "it is certain that these materials are much inferior to rubber balls as vibration absorbers." He found that the most effective, stable supporting system was obtained by arranging small rubber balls in the form of a tetrahedron and placing four such tetrahedra at the four corners of the apparatus to be supported. To obtain the necessary stability the system is heavily loaded.

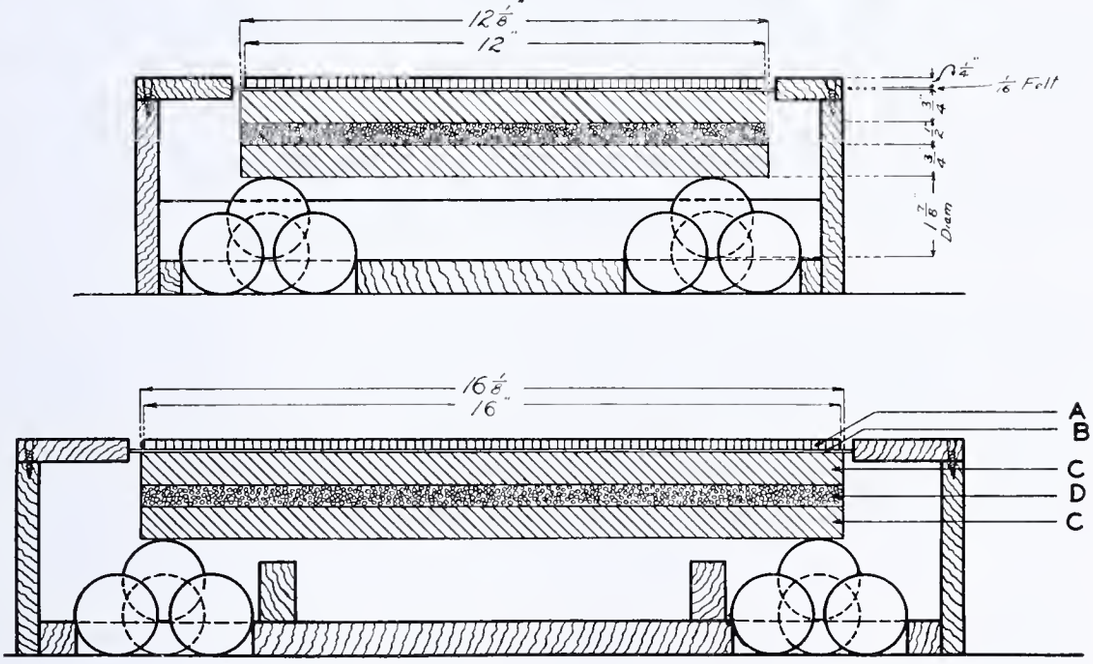

FIGURE 1. SYSTEM USED TO SUPPORT MICROBALANCES

Above, section through *A–A'*
Below, section through *B–B'*

Figure 1 indicates the system which is in use for supporting the microbalances. The rubber balls are standard "hand balls" and the weight consists of two 1.9-cm. (0.75-inch) thick lead slabs, *C* (each weighing about 27 kg., 60 pounds), separated from each other by a 1.25-cm. (0.5-inch) thick sheet of sponge rubber, *D*. Figure 2 indicates the wooden box which surrounds the supporting system. The box not only serves to hold the hand balls in place, but also protects the entire system from accidental touching. The hand balls may rest either in a circular hole, as shown in Figure 2, or in a triangular hole with rounded corners. The height of the box is made so that with new balls in use, the piece of felt, *B*, just makes contact with the upper edge of the four sides of the rectangular opening. The felt tends to act as a slight brake on horizontal motion imparted by touching the balance and still it does not transmit any appreciable vibrations to the system. On top of the felt is placed a sheet of 0.6-cm. (0.25-inch) plate glass, *A*, to which the balance feet sockets are cemented with Krönig's cement. The rubber balls are deformed considerably with the weight on them and are not actually spherical as shown in the figure. They gradually assume a permanent deformation and the height of the support gradually decreases until finally the felt will no longer make contact with the edges of the box. When this occurs, usually after about 6 months, it is best to renew the balls. This is done

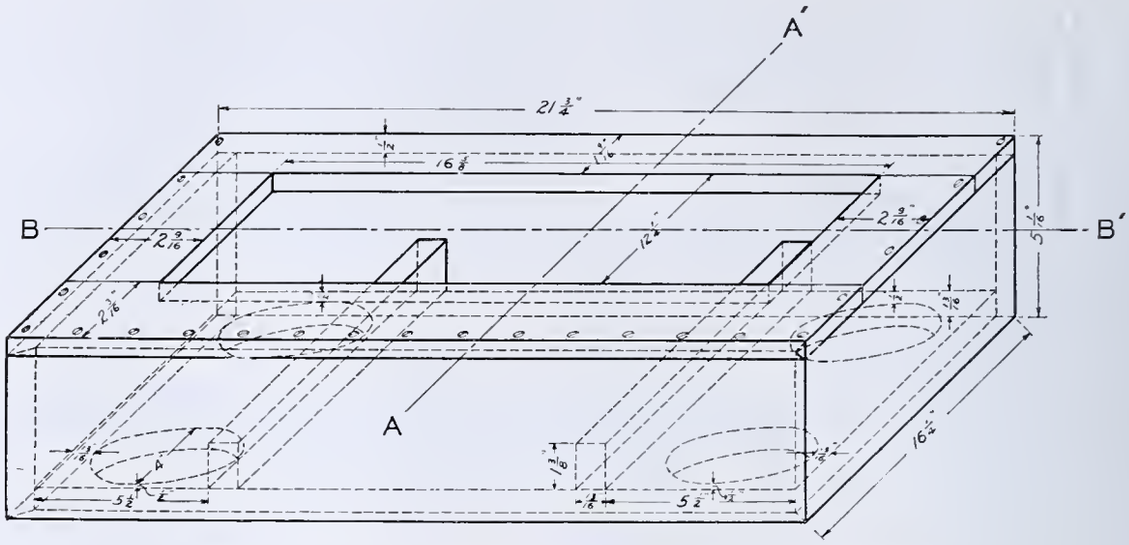

FIGURE 2. WOODEN BOX SURROUNDING SUPPORTING SYSTEM

by removing the balance, glass plate, and felt from the support. The top of the wooden box is unscrewed and removed and the lead plates are lifted off the balls. New balls are substituted for the old ones and the support is reassembled. In the gradual settling process it is necessary to check periodically on the balance to make sure that it is always level. No large or sudden changes in zero point have ever been observed on any of the balances mounted on these supports. The two lower transverse wooden cross pieces are added to the box to prevent the balance from dropping any great distance in case a ball should collapse. So far, such an accident has never occurred.

The effectiveness of this mounting is plainly shown by observing a shallow dish of mercury placed on the support. With the normal vibrations present in the room there is no noticeable motion of the mercury surface and even with severe vibrations set up by pounding the balance table with the fist, jumping up and down on the balance room floor, roughly sliding the outer balance case window up and down, etc., there is only a faint rippling of the mercury surface. However, with the dish of mercury on the balance table the normal vibrations present cause the surface to be in a constant state of motion and the strong production of vibration, by the methods just mentioned, causes violent agitation of the mercury surface.

Illumination

With the type of balance table and case in use it is possible to illuminate the scale of the balance sufficiently and at the same time prevent excessive heat from reaching the balance. This is accomplished by placing a large shallow beaker filled with distilled water on the top of the external balance case and placing a 100-watt bulb and shade just over the top of this beaker, which is carefully centered over the balance. The rays from the bulb pass through a 10-cm. (4-inch) column of water which absorbs practically all the heat, so that the underside of the glass barely becomes warm even if the light is left on continuously. The bulb is at a distance of about 37.5 cm. (15 inches) from the top of the balance. For safety's sake, wire glass is used in the top of the outside balance case, so that if this glass should crack the beaker of water could not fall onto the balance.

Humidity

Hernler (*7*) first pointed out that a relative humidity of 60 to 70 per cent seemed most favorable for carrying out carbon-hydrogen determinations and mentioned that a 45 per cent humidity was too low. Recently, Hayman (*6*) found that if the relative humidity was maintained above 45 per cent little difficulty was encountered with static charges being developed on the surface of the absorption tubes during wiping, but that if the humidity dropped below 40 per cent these difficulties became serious. The same observation was made, independently, in this laboratory. The author found that if the relative humidity is maintained above 50 per cent no difficulty arises from static charges in weighing the absorption tubes, but that below this point the weighing becomes troublesome. In the summer there is no difficulty in maintaining the humidity above 50 per cent. In the winter the humidity is kept above 50 per cent, both by the water which evaporates from the beakers which absorb the heat from the lights and also by having a round Cenco, three-heat electrical water bath (110 or 220 volts, 50 to 600 watts) in the balance room. This adds moisture to the atmosphere but apparently adds relatively little heat. A satisfactory control of the humidity can be thus obtained with little effort. Daily records are kept of the humidity and it has been found that the maximum change in humidity in the balance room over a 7- to 8-hour interval is less than 5 per cent.

Temperature

The importance of careful temperature regulation of the balance room has been stressed by all microchemical authorities. There appears to be general agreement with Schwarz-Bergkampf (*11*) that in order to weigh to an accuracy of 2 γ the balance must be set up in a room in which daily temperature fluctuations are less than 1° C. and the temperature should be maintained above 20° C., so that the body temperature of the operator has less influence.

The laboratory surrounding the author's balance room is kept at an approximately constant temperature in the winter by means of a unit gas heater suspended from the ceiling and operated by an electrically controlled thermostat. The primary function of this heater is to maintain the laboratory room at constant temperature during the night when the steam heat is turned off. During the day time a fairly constant temperature is maintained in the laboratory by manual adjustment of the steam radiator. The temperature of the balance room itself is maintained at 24° to 25° C. and held constant, within the limits mentioned above, by means of an electrical heater placed in one corner of the room and operated manually. A recognized improvement would be the use of an automatic thermostatically controlled electrical heater such as is described by Furter (*4*).

With the progress constantly being made in air conditioning it is probably safe to predict that in the not far distant future, small, relatively inexpensive units will be available which would be adequate for a balance room such as that

nder discussion. The problems of dust removal, tempera-ure control, and proper humidification would all be simul-aneously solved by the use of such a unit, which would be specially important in the summer time. In the balance oom above described there is, at present, no attempt made o control the temperature and humidity during the hot, umid summer months. The temperature of the balance oom during these months sometimes rises as much as 4° to ° C. from morning to night and relative humidities of 80 to 0 per cent are not uncommon.

Grateful acknowledgment is hereby made to J. A. Thomp-on, chief mechanic of the laboratory, for making and install-ng the air filter and for the construction of the electrical heater nd the three balance supports; to H. C. Howard for directing ttention to his paper on vibration absorbers; and to other embers of the laboratory for valuable suggestions.

Literature Cited

(1) Boëtius, M., "Über die Fehlerquellen bei der mikroanalytischen Bestimmung des Kohlenstoffes und Wasserstoffes nach der Methode von Fritz Pregl," p. 18, Berlin, Verlag Chemie, 1931.
(2) Emich, F., "Lehrbuch der Mikrochemie," 2nd ed., p. 76, Munich, J. F. Bergmann, 1926.
(3) Friedrich, A., "Die Praxis der quantitativen organischen Mikroanalyse," p. 12, Leipzig and Wien, Franz Deuticke, 1933.
(4) Furter, M., *Mikrochemie*, **18**, 1–10 (1935).
(5) Gorbach, G., *Ibid.*, **20**, 254–336 (1936).
(6) Hayman, D. F., Ind. Eng. Chem., Anal. Ed., **8**, 342–3 (1936).
(7) Hernler, F., *Mikrochemie*, Emich Festschrift, 148–51 (1930).
(8) Howard, H. C., J. Ind. Eng. Chem., **13**, 231–5 (1921).
(9) Pregl, F., "Quantitative organische Mikroanalyse," 3rd ed., p. 13, Berlin, Julius Springer, 1930.
(10) Pregl, F., and Roth, H., "Quantitative organische Mikroanalyse," 4th ed., p. 11, Berlin, Julius Springer, 1935.
(11) Schwarz-Bergkampf, E., *Z. anal. Chem.*, **69**, 321–41 (1926).
(12) Weygand, C., "Quantitative analytische Mikromethoden der organischen Chemie," p. 8, Leipzig, Akademische Verlagsgesellschaft, 1931.

Received April 5, 1937. Presented before the Microchemical Section at the 93rd Meeting of the American Chemical Society, Chapel Hill, N. C., April 12 to 15, 1937.

Carbon Dioxide Generator for the Micro-Dumas Determination of Nitrogen

E. B. HERSHBERG and GERTRUDE W. WELLWOOD
Converse Memorial Laboratory, Harvard University, Cambridge, Mass.

OMMERCIAL solid carbon dioxide has attained wide-spread use as a convenient source of the gas and two enerators utilizing this material have been described (*1*, *2*). The generator described below was designed specifically or use in the micro-Dumas determination of nitrogen accord-ng to Pregl, for which purpose it has been found very satis-actory and convenient. The gas delivered is of uniformly igh purity, and where intermittent service is required the enerator seems to be superior to those of the chemical type ecause of its simplicity and the ease of refilling. Once the ir is displaced by the heavier gas, the generator gives a con-tant flow of pure carbon dioxide at a pressure fixed by the verflow valve, until the charge is exhausted.

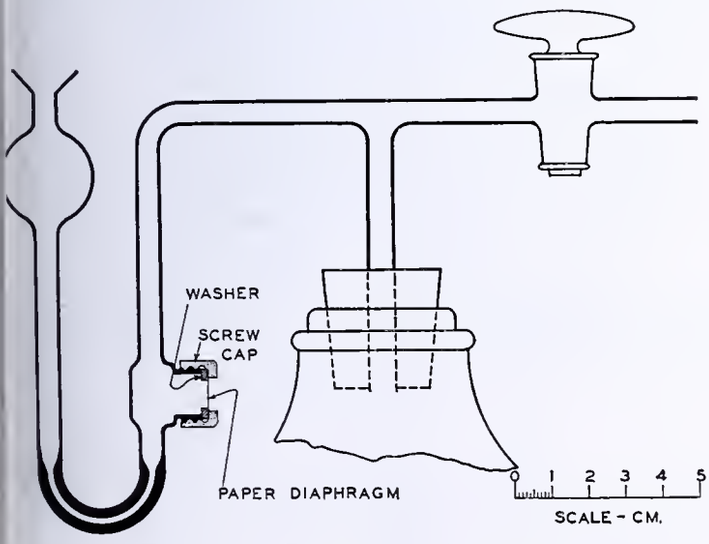

Figure 1. Diagram of Apparatus

A commercial vacuum bottle (narrow-mouthed, 0.5-liter, 1-int size) is nearly filled with finely crushed solid carbon dioxide nd fitted with a one-holed rubber stopper carrying a T-tube, ne side of which is sealed to the delivery stopcock and the other o a pressure-regulating valve (Figure 1). Two types of valve ave been used; the first a simple all-glass mercury trap consisting of a tube drawn to a 0.5-mm. capillary dipping under 3 to 4 cm. of mercury. Although this gave satisfactory service, the continuous escape of gas bubbling through mercury constitutes a possible health hazard, and a second valve was designed which overcomes this objection. This valve is illustrated in Figure 1 and consists of a mercury manometer actuated by the gas pressure, the mercury uncovering a paper diaphragm to release the excess gas. The best regulation is obtained by selecting a hardened filter paper (Carl Schleicher and Schüll, No. 575, hardened paper) of such porosity that a portion of the diaphragm remains uncovered by the mercury column. The trap is of soft glass, permitting the use of a short portion of a 15-mm. diameter vial with a perforated screw cap for the diaphragm holder. A washer of Neoprene is inserted between the glass and the paper to make a seal. If this order is reversed and the paper placed in contact with the glass, the gas leaks out too rapidly and causes oscillation of the mercury column. When properly adjusted, the fluctuation is less than 1 mm. of mercury.

After filling, the generator is allowed to stand for several hours before use, preferably overnight. The escaping gas sweeps out all the air and the resulting microbubbles fulfill the requirements (*3*, *4*). A volume of approximately 30 cc. of gas absorbed in alkali in a microazotometer, at the rate of 2 bubbles in 3 seconds for a period of 0.5 hour, left a residue of 2 to 3 cu. mm. Charged with 450 grams of solid carbon dioxide, the generator delivered 3.4 grams of gas per hour at the start and 2.5 grams per hour after 100 hours. This rate will of course vary with different vacuum bottles. For continuous operation, the generator may be recharged every fourth or fifth evening and then is ready for use on the following morning.

Literature Cited

(1) Conard, *J. Chem. Education*, **13**, 539–40 (1936).
(2) McIntosh, *Proc. Trans. Nova Scotian Inst. Sci.*, **17**, Pt. 1, 71–8 (1927).
(3) Pregl, "Quantitative Organic Microanalysis," 2nd ed., tr. by E. Fyleman, pp. 91, 102, Philadelphia, Pa., P. Blakiston's Son & Co., 1930.
(4) Trautz, *Mikrochemie*, **9**, 300 (1931).

Received March 4, 1937.

Nitrogen Determination in Refractory Substances

By a Modification of the Dumas Micromethod

JOSEPH R. SPIES AND THOMAS H. HARRIS
Bureau of Chemistry and Soils, U. S. Department of Agriculture, Washington, D. C.

CERTAIN organic compounds, including derivatives of pyrimidine, purine, and chlorophyll (*2*, *4*), give low erratic values for nitrogen by the Dumas micromethod. This difficulty often occurs with compounds which carbonize on heating to yield particles of "nitrogenous charcoal," or material only partly burned by oxygen supplied by the adjacent copper oxide. When this source of oxygen is exhausted, complete combustion cannot be accomplished even by heating at a high temperature. To obviate this lack of oxygen it has been recommended that potassium chlorate be mixed with the sample along with the fine copper oxide. This procedure is not satisfactory, presumably because of the low temperature (400° C.) at which potassium chlorate gives up its oxygen (*1*, *4*). The oxygen is liberated and passes on before the compound has completely burned. Other suggested methods involving the use of potassium dichromate or lead chromate, which decompose at higher temperatures, are discussed by Friedrich (*1*). He concludes, however, that the results are not entirely satisfactory and should be confirmed by the Kjeldahl method. Milner and Sherman (*2*) draw a similar conclusion. Weidemann (*4*) recommends allowing the tube to cool after the combustion is first carried out in the normal way. The region in which the unburned residue may be found is then tapped to bring fresh copper oxide in contact with the nitrogen-containing residue, and the tube is reheated. This procedure has given good results with chlorophyll derivatives (*4*).

A modification of the Dumas micromethod leading to wider applicability provides advantages in determining empirical formulas of naturally occurring nitrogenous compounds and their derivatives. The authors' procedure obviates the need for confirmatory Kjeldahl determinations and results in economy of time, particularly for compounds requiring reduction prior to Kjeldahl digestion.

Modified Method

The essential features of the modified method are as follows: Pure potassium chlorate is used to supply oxygen. To overcome the objectionable low decomposition point, the potassium chlorate is not mixed with the sample but is placed in a porcelain boat in the unoccupied portion of the combustion tube following the copper oxide. The organic compound is burned in the usual manner and the evolved nitrogen is swept out with carbon dioxide until the approach of microbubbles. The carbon dioxide flow is then stopped and the portion of the tube including the sample and intervening distance to the furnace is heated with a wing-tipped burner while the chlorate is slowly decomposed by heating with another burner. In this way the nitrogenous residue is subjected to an atmosphere of oxygen at a temperature of about 600° C. The copper adjacent to unburned particles is alternately oxidized and reduced until combustion is complete. To protect the reduced copper oxide in the permanent filling, a 10- to 15-mm. section of coarse reduced copper oxide is placed in the temporary filling of the combustion tube. Rate of gas flow into the azotometer is controlled by stopcock *b*, Figures 1 and 2, during the sweeping-out processes. This prevents the sudden compression of gas in the combustion tube which occurs at the outset of the scavenging period when regulation of gas flow is accomplished by stopcock *a*. This point is important, particularly following the decomposition of the chlorate, to prevent too rapid passage of oxygen into the heated copper section of the tube.

TABLE I. NITROGEN CONTENT BY THE KJELDAHL AND UNMODIFIED DUMAS MICROMETHODS

Compound	Formula	Nitrogen Calcd. %	Nitrogen Kjeldahl %	Nitrogen Dumas %
2-Hydroxy-6-aminopurine[a]	$C_5H_5N_5O$	46.34	46.4 46.3	43.8 44.8 39.4 45.6 44.8
Cytosine	$C_4H_5N_3O$	37.83	37.8	36.2 36.1 36.6
1-Methylcytosine	$C_5H_7N_3O$	33.59	33.6 33.5	33.6 33.8 33.9 33.6 33.6
2-Hydroxy-6-aminopurine-*d*-riboside[a]	$C_{10}H_{13}O_5N_5$	24.73	24.7 24.7 24.8	22.8 22.4 24.3 23.8
Thymine[b]	$C_5H_6N_2O_2$	22.22	22.0 22.2	22.1 22.3
5-Bromocytosine	$C_4H_4N_3OBr$	22.12	22.2	21.1 21.0 21.2
5-Bromouracil	$C_4H_3O_2N_2Br$	14.67	14.6	14.4 14.3 14.4
1-Methyl-5-bromouracil	$C_5H_5O_2N_2Br$	13.67	13.6	12.9 13.0 13.2
2-4-Dimethoxy-5-bromopyrimidine	$C_6H_7O_2N_2Br$	12.79	12.7 12.8 12.7	11.8 11.5 11.5

[a] For the source of these compounds see (*6*).
[b] Prepared by E. F. Jansen.

Nine representative compounds were analyzed by the ordinary Dumas micromethod and seven gave low erratic results. The purity of these compounds was ascertained by

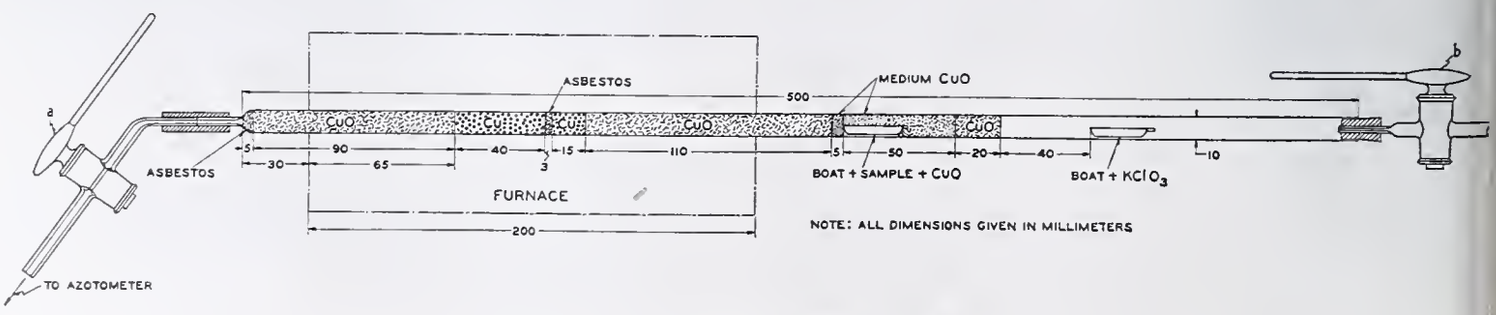

FIGURE 1. COMBUSTION TUBE FILLING

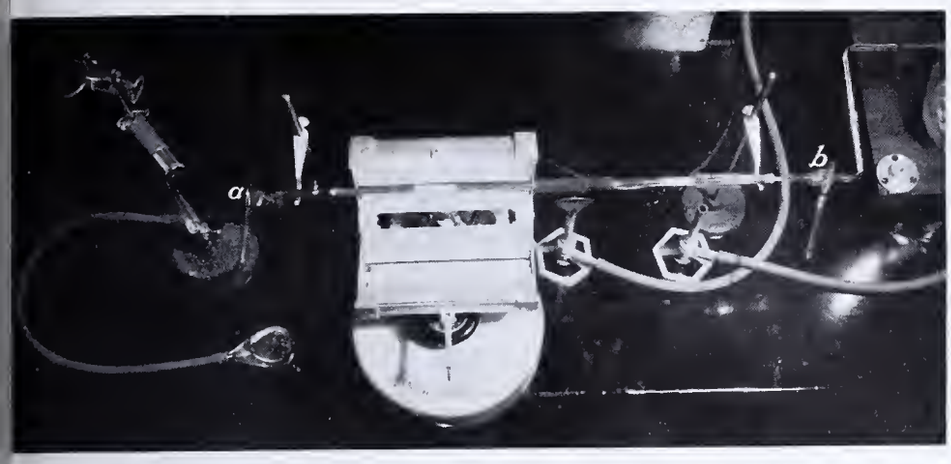

FIGURE 2. PHOTOGRAPH OF APPARATUS

nalysis by the Kjeldahl micromethod. In some of the analyses s much as 14 per cent of the nitrogen was not obtained. Sevral of the compounds analyzed by the authors were reported y Milner and Sherman (*2*), who also obtained low results. 'able I gives a summary of the results obtained by the Kjelahl and the unmodified Dumas method. It is interesting hat 1-methylcytosine and thymine could be analyzed corectly by the usual method.

The authors' modified Dumas method gave consistently orrect values on all seven of the compounds which could not e analyzed by the regular method. More than 99 per cent f the nitrogen can be obtained by this modification. Deiled results of these analyses are given in Table II. The nalyses reported are unselected and include all those made fter the method was perfected. The amount deducted from he volume of nitrogen gas has been the subject of considerble investigation by others (*5*). The authors have chosen he 2 per cent correction because it gave satisfactory results ith their modification.

Experimental

REAGENTS. Reagent grade potassium chlorate is sed. Three additional recrystallizations made o apparent difference in the results obtained. Vhether further purification of the potassium chlorte is necessary should be determined by analysis f a compound of known purity.

Copper oxide: coarse passes 20-, retained by 40-esh sieve; medium passes 40-, retained by 100-esh sieve; fine passes 100-mesh sieve; reduced asses 20-, retained by 40-mesh sieve.

Carbon dioxide is obtained from sodium bicarbnate in a generator similar to that described by oth (*3*). Potassium hydroxide solution is prepared y dissolving 85 per cent stick potassium hydroxide an equal weight of distilled water. No further eatment is necessary.

FILLING THE COMBUSTION TUBE. The comustion tube filling is shown in Figure 1. Jena upermax or Pyrex combustion glass tubes 500 mm. length are used. The permanent filling is the me as that described by Pregl. The temporary lling is made as follows: reduced copper oxide, 10 15 mm., to take care of excess oxygen from the otassium chlorate (the oxidized portion of this pper is removed and replaced after each analys); coarse oxide, 100 to 110 mm.; medium oxide, mm.; the boat containing the sample mixed with ne oxide, pushed up to the medium oxide with an nited platinum wire and enough medium oxide oured in to surround it, making a section at least 5 mm. in length; coarse oxide, 20 mm.; and owdered potassium chlorate, 100 to 125 mg., in a 0-mm. porcelain boat, pushed into the tube to ithin 40 mm. of the final coarse copper oxide. n electric furnace is used to heat the tube in lace of the gas long-burner.

WEIGHING AND PREPARATION OF THE SAMPLE. he sample is spread in a thin line along the length of a 30-mm. porcelain boat and weighed on the microchemical balance. The boat is then half-filled with fine copper oxide and the sample and oxide are mixed thoroughly by careful stirring with a 25-mm. length of 30-gage platinum wire which is slightly flattened on one end. The wire is then laid on the oxide and the boat is filled with fine oxide. This method of mixing sample and oxide has given satisfactory results with a variety of compounds and obviates objectionable features of Pregl's method of introducing the sample.

GENERAL PROCEDURE. The apparatus used is shown in Figure 2. After inserting the boat containing the sample, the combustion tube should be inclined at an angle of about 45 degrees while sufficient medium copper oxide is poured in to surround it, care being used that the sample and fine oxide remain distributed over the full length of the boat. Precaution should be taken in handling and connecting the filled combustion tube, so that the copper oxide remains tightly packed around the boat. The tube is evacuated (*5*) and the preliminary sweeping-out process and combustion are carried out in the usual way. All regulation of gas flow is accomplished by stopcock *b*, the plunger of which is notched to facilitate regulation.

The end of the carbon dioxide inlet tube, where it passes through the combustion-tube stopper, is melted down to a fine capillary opening as an additional aid to control of gas flow. The size of the orifice is such that 30 to 45 seconds are required for the evacuated tube to become filled with carbon dioxide when the pressure in the generator is about 40 mm. of mercury. This prevents any considerable volume of gas from passing through the tube if stopcock *b* is accidentally opened too far. Stopcock *a* is used solely to maintain vacuum in the tube while it is being connected to the azotometer.

After the combustion, when the sweeping-out process is almost completed, stopcock *b* is closed, and the lighted wing-tipped burner is gradually put in place. The other lighted burner is also gradually put in place between the boat containing chlorate and the combustion tube stopper. Stopcock *a* is open during

TABLE II. NITROGEN CONTENT BY MODIFIED DUMAS METHOD

Compound	Formula	Sample	Nitrogen Found[a]	Nitrogen Calcd.	Nitrogen Av.	Nitrogen Difference	Deviation of Average from Theory
		Mg.	%	%	%	%	%
Acetanilide[b]	C_8H_9NO	4.920	10.44	10.37	10.47	+0.10	+0.96
		4.803	10.50				
2-Hydroxy-6-amino-purine	$C_5H_5N_5O$	3.041	46.31	46.34	45.98	−0.36	−0.78
		3.049	45.90				
		3.137	45.75				
		2.789	45.94				
		1.890	46.06				
		1.867	45.91				
		1.977	46.22				
		2.251	45.75				
Cytosine	$C_4H_5N_3O$	2.306	37.77	37.83	37.85	+0.02	+0.05
		2.622	38.06				
		3.700	37.76				
		3.844	37.81				
1-Methylcytosine[b]	$C_5H_7N_3O$	4.540	33.47	33.59	33.74	+0.15	+0.45
		4.447	33.59				
		3.077	34.04				
		3.629	33.87				
2-Hydroxy-6-amino-purine-*d*-riboside	$C_{10}H_{13}N_5O_5$	2.781	24.78	24.73	24.85	+0.12	+0.49
		2.587	24.91				
Thymine[b]	$C_5H_6N_2O_2$	3.912	22.29	22.22	22.29	+0.07	+0.31
5-Bromocytosine	$C_4H_4N_3OBr$	3.623	22.01	22.12	22.08	−0.04	−0.18
		3.817	22.15				
5-Bromouracil	$C_4H_3N_2O_2Br$	4.563	14.95	14.67	14.74	+0.07	+0.48
		4.083	14.78				
		4.186	14.49				
1-Methyl-5-bromouracil	$C_5H_5N_2O_2Br$	4.296	13.77	13.67	13.68	+0.01	+0.07
		3.993	13.59				
2-4-Dimethoxy-5-bromopyrimidine	$C_6H_7N_2O_2Br$	4.054	12.59	12.79	12.64[c]	−0.15	−1.17
		3.622	12.57				
		3.683	12.77				

[a] Although in most cases the volume of nitrogen could be read only to three significant figures, the calculation was carried to four places for purposes of comparison with the theoretical value.

[b] These compounds give correct nitrogen values by the unmodified method and therefore serve as controls for the modified method.

[c] The low result is accounted for by the fact that this compound sublimes easily and probably some of the sample is lost in evacuating and sweeping out the combustion tube.

this time, so that heating up the combustion tube must be gradual to prevent undue increase in the rate of gas flow into the azotometer. The potassium chlorate is then decomposed, using a low flame, by advancing the burner a few millimeters at a time. The rate of gas flow should at no time exceed two bubbles in 3 seconds. Fifteen to 25 minutes are usually required for this operation. When all the potassium chlorate is decomposed, the mercury sucks back from the azotometer as oxygen is taken up by the copper. The combustion tube is then swept out until microbubbles are attained. Heating with the wing-tipped burner is continued while oxygen remains in the tube. The electric furnace must be left in place until just prior to disconnecting the azotometer to prevent passage of oxygen due to cooling of the copper. The filling surrounding the boat, after an analysis using potassium chlorate, should show only copper oxide.

An ignited 3-mm. brass rod is used to aid in removing the slightly fused temporary filling after each analysis. If the combustion tube is of sufficiently large diameter, no trouble will be experienced in removing the boat which contained potassium chlorate. Combustion tubes become discolored after twenty to thirty analyses and it becomes difficult to see into them when filling. Discolored tubes may be cleaned by removing the filling and washing with water, followed by aqua regia if necessary.

Used copper–copper oxide is recovered by washing out the potassium chloride with distilled water, drying, sieving, and igniting in a nickel crucible.

The amount of nitrogen obtained in the second phase of the combustion, during which the chlorate is decomposed, ranges from about 0.01 to 0.05 cc.

Summary

A modification of the Dumas micromethod for nitrogen is described which gives satisfactory results with compounds which are resistant to combustion by the ordinary metho The method involves the use of potassium chlorate to suppl oxygen. To overcome the objectionable low decompositic point of the chlorate, it is decomposed after the combustion the organic compound while the site of the unburned residu is heated to about 600° C., thereby subjecting the nitrogenou residue to an atmosphere of oxygen at high temperatur Seven compounds, which include derivatives of pyrimidir and purine, were used for this study and it seems reasonab to expect that all refractory compounds of this type can thu be analyzed.

Acknowledgment

The authors are indebted to Guido E. Hilbert for kindl supplying several of the samples used in this work.

Literature Cited

(1) Friedrich, P. A., "Die Praxis der quantitativen organische Mikroanalyse," pp. 74–5, Leipzig and Vienna, Franz De ticke, 1933.
(2) Milner, R. T., and Sherman, M. S., Ind. Eng. Chem., Ana Ed., 8, 331 (1936).
(3) Poth, E. J., *Ibid.*, 2, 250 (1930).
(4) Pregl, F., "Quantitative Organic Microanalysis," edited by I Roth, tr. by E. B. Daw, 3rd English ed., pp. 85–6, Philade phia, P. Blakiston's Son & Co., 1936.
(5) *Ibid.*, pp. 70–2.
(6) Spies, J. R., and Drake, N. L., *J. Am. Chem. Soc.*, 57, 774 (1935

Received March 27, 1937.

Note to Authors

IN THE preparation of manuscripts authors should address themselves to specialists in their particular fields, rather than to the general reader. If the article describes a new method, the author should endeavor to tell the complete story, so that the reader will not have to wait for succeeding contributions or duplicate the unpublished tests in order to find out whether he can apply the method in his own work.

The following is suggested as a general outline to be followed in preparing analytical methods for this edition:

1. Preliminary statement or introduction, in which the need for the method should be stated, brief reference to other methods or literature given, etc.
2. Experimental:
   - Outline of proposed method
   - Description of apparatus and reagents
   - Procedure
   - Data:
     - Interfering substances or conditions
     - Concentration range through which the method is applicable
     - Accuracy of the method
     - Precision of the method
3. Discussion and summary

The author should state at the outset what the original features of the paper are. If it deals with a method of analysis, he should give some comparison with established methods in point of speed, applicability, accuracy, and cost. Extensive reviews of the literature should not be given and such references as are cited should be carefully checked. Incorrect references are inexcusable and cast doubts on the author's reliability. The theoretical considerations on which the method is based should be clearly set forth.

In the experimental part, previously published or well-known procedures which have been followed should only be designated or references given to them. If, however, the method is new, the data upon which it is based should be presented but in no greater detail than is necessary to prove its soundness. New procedures should be clearly described, that readers can easily duplicate the work. Loose directions should be avoided, unless the author knows that no possib harm can result from the most liberal interpretation tha can be made of such expressions as "to the faintly acid solu tion," "wash the precipitate," "ignite," etc. If new or un common reagents are needed, the author should state the probable cost, where they can be purchased if rare, or ho they can be prepared, if not on the market.

The author should distinguish carefully between precisio and accuracy. Briefly but somewhat roughly stated, ac curacy is a measure of degree of correctness; precision is measure of reproducibility. The precision of a result doe not necessarily have anything to do with its accuracy; serves merely as a measure of the duplicability of the pro cedure in the hands of a given operator. No claim for ac curacy should be made unless the author believes that he ha satisfactorily established the correct result.

The author should be frank and define the limitations of th method. Tests dealing with the effects of foreign compound should be made on mixtures in which the ratios of the com pounds sought to the foreign compounds are varied an simulate conditions that are likely to be encountered i practice. If the author has made no such tests, he shoul state that he has no knowledge of the effects of foreign sub stances. It is desirable that possible applications of method should be stated.

A summary or prefatory abstract should acquaint th reader with the main points of the article. This should giv concisely where possible the substances determined, nature c material to which determination is applicable, interferin substances, range of concentration to which method i applicable, whether or not a sensible constant error is in volved—that is, the accuracy of the method—and its prec sion. Either the summary or the prefatory abstract is s often used by abstractors that the author may well spen considerable time in their preparation, in order to be certai that proper emphasis is given to the main features of th contribution.

ANALYTICAL EDITION

INDUSTRIAL and ENGINEERING CHEMISTRY

Harrison E. Howe, Editor

Determining Ash in High-Carbonate Coals

A Study of the Modified Method

O. W. REES, Illinois State Geological Survey, Urbana, Ill.

THIS paper presents the results of an investigation of a modified procedure for determining ash and mineral matter in coals high in pyrite and calcium carbonate, first proposed by S. W. Parr. This investigation was carried on to determine the causes of difficulties encountered in attempting to use this method as described, and, if possible, to find a way of eliminating them. Since the method has received widespread distribution in textbooks (*2*) and as a recommended optional procedure of the American Society for Testing Materials for determining the mineral matter content of high-sulfur, high-carbonate coals for classification purposes (*1*), it was deemed desirable to call the attention of the coal analyst to the fallacies involved in the procedure outlined and to recommended changes which would make it more reliable.

Samples which contain comparatively large amounts of both pyrite and carbonate are frequently encountered in coal analysis. These two minerals may undergo various reactions in the course of the regular determination of ash. Pyrite is mainly burned to ferric oxide and sulfur dioxide, but some may be oxidized to ferric sulfate, which on further heating will be decomposed to give ferric oxide with the loss of sulfur trioxide. Calcium carbonate may decompose to some extent to give calcium oxide and carbon dioxide and may react with pyrite to give calcium sulfide and ferric oxide with loss of carbon dioxide. The calcium sulfide so formed may be partially oxidized to calcium sulfate, while the calcium carbonate and oxide may react with sulfur dioxide and oxygen or with sulfur trioxide to form calcium sulfate. It is apparent that no definite composition will be reached by the usual ashing procedure and that some special procedure is necessary for samples containing high amounts of pyrite and carbonate.

As early as 1916 Parr (*3*), realizing these facts, published a special method for use in such cases. His method was based on the idea that if the sample was first ashed as usual and then treated with a few drops of sulfuric acid all calcium sulfide, calcium oxide, and calcium carbonate would be converted to calcium sulfate and could be weighed as such, after careful removal of the excess sulfuric acid by heating at a definite temperature for a definite time. If the mineral carbon dioxide content of the sample was determined and if it was assumed that all mineral carbon dioxide was present as calcium carbonate, an assumption for which there is proof, it would be possible to calculate back to the calcium carbonate basis by subtracting three times the equivalent of carbon present as carbon dioxide from the ash as weighed. Parr (*3*) described his method as follows:

> For coals whose mineral carbon dioxide values are large enough to call for correction, say up to 1 per cent or greater, the ash, after the preliminary burning off of the carbon and cooling, is moistened with a few drops of sulfuric acid (diluted 1 to 1) and again after drying brought up to 750° C. and retained at that temperature for 3 to 5 minutes. The capsule is cooled in a desiccator and weighed.

In the course of regular coal analysis in this laboratory the author encountered a series of samples having large amounts of both carbonate and pyrite. As it was evident that a special procedure was necessary, he attempted to use Parr's special method. Disconcerting discrepancies were found in the results obtained. In some cases these unit coal values by Parr's modified method differed to an unexpected degree from those calculated using regular ash values as bases for calculated mineral matter values. Furthermore, a comparison of these values with appropriate county average unit coal values showed them to be entirely too high.

Table I shows that the mineral matter values obtained by calculation (1.08 ash + 0.55 sulfur) from regularly determined ash values vary considerably from the values obtained by

TABLE I. COMPARATIVE VALUES

(Woodford County No. 2 Coal)

Lab. No.	Ash	Sulfur	CO_2	Mineral Matter: Calculated from routine ash determination	Mineral Matter: Determined by Parr method	Unit Coal Value: From calculated mineral matter value [a,b]	Unit Coal Value: From Parr mineral matter determination [b]	County Average Unit Coal Values
C-993	19.4	2.24	1.63	22.18	22.76	14744	14854	14690
C-994	11.0	1.68	0.48	12.80	13.22	14742	14814	14690
C-995	14.3	1.77	0.59	16.42	16.60	14786	14818	14690
C-996	19.7	1.97	1.81	22.36	23.19	14443	14599	14690
C-997	30.5	2.87	4.49	34.52	36.02	14515	14855	14690
C-998	36.5	3.95	3.93	41.59	41.79	14957	15008	14690

[a] Routine ash to mineral matter. [b] CO_2 correction.

TABLE II. COMPARISON OF VALUES OBTAINED BY TWO DIFFERENT ANALYSTS

Lab. No.	Mineral Matter Values 1st analyst	Mineral Matter Values 2nd analyst	Unit Coal Values (CO_2 Correction) 1st analyst	Unit Coal Values (CO_2 Correction) 2nd analyst
C-993	22.76	21.94	14854	14700
C-994	13.22	12.71	14814	14727
C-995	16.60	17.13	14818	14912
C-996	23.19	22.30	14599	14431
C-997	36.02	36.68	14855	15010
C-998	41.79	42.19	15008	15112
Further Results on Samples C-997 and C-998				
C-997	36.21	36.29	14899	14918
C-998	41.98	42.01	15057	15065

Parr's modified method. This is especially true in sample C-997 and to a lesser extent in sample C-998, both of which are high in sulfur and carbon dioxide. Unit coal values calculated from the mineral matter values differ considerably. By use of the regular A. S. T. M. ash method, widely varying results were obtained on duplicate portions of the same samples.

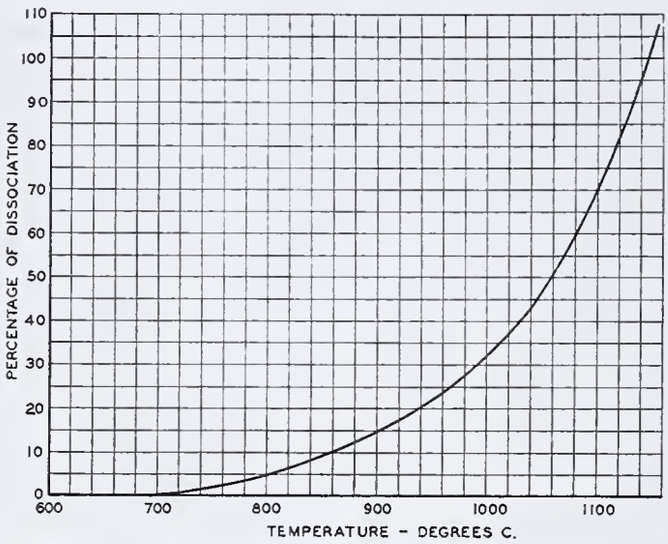

FIGURE 1. DISSOCIATION CURVE FOR CALCIUM SULFATE

Because of these discrepancies a second analyst was asked to check these determinations, using the modified ash determination method. Table II shows a comparison of these two sets of values, together with a comparison of unit coal values in whose calculation these two sets of mineral matter values were used. Deviations which are greater than desirable are noted in this table.

Because of these discrepancies it seemed advisable to study further the method recommended by Parr. Samples C-997 and C-998, which have the highest amounts of sulfur and mineral carbon dioxide, seemed to be best suited to such study.

In making unit coal calculations

$$\left[\text{Parr formula: } \frac{\text{B. t. u.} - 50S}{100 - (1.08 \text{ ash} + 0.55 \text{ sulfur})} \times 100\right]$$

three values are used—namely, calorific, sulfur, and mineral matter values. The mineral matter value is obtained either by calculation from the usual ash value (A. S. T. M. standard method) and sulfur value or by Parr's modified method of ash determination described above. The unit coal values in whose calculation mineral matter values obtained by the modified method had been used appeared to be too high. Since the determination of calorific and sulfur values is well standardized, the author suspected that this modified method of ash determination was giving high results.

In Parr's method as described above, the sulfuric acid which is added converts any calcium oxide or calcium sulfide to calcium sulfate, in which form it is weighed, and also converts iron and aluminum oxides at least partially to sulfates. However, these should be quantitatively decomposed upo ignition to the oxides if the method is to give dependable re sults. Therefore, at the time of weighing the sample afte the ignition following the acid treatment, the sulfate presen should be exactly equivalent to the calcium present.

In order to see if the above condition held, two 1-gram sam ples of coal C-997 were treated by the Parr modified proce dure and weighed. The ash was then extracted with hot 1 to hydrochloric acid and determinations of calcium oxide an sulfate were made. The quantity of sulfate present was fa in excess of that required for calcium sulfate by the calciu oxide found present.

This fact suggested that the heating period of 3 to 5 minute was not sufficient to expel the excess sulfuric acid or to co vert any iron and aluminum sulfates completely to the oxide A longer heating period at 750° C. or a higher temperatu should be used. However, in order to use either of the safely it is necessary to know their effect on the decompositio of calcium sulfate. If the procedure is to be usable at al calcium sulfate must not be decomposed during the actu procedure and all other sulfates must be quantitatively de composed. In this connection Parr (*3*) published some dat on the decomposition of calcium sulfate at different temper tures, according to which the decomposition of calcium su fate begins at about 700° C. and increases rapidly from 900 to 1100° C. He shows that calcium sulfate is decomposed t the extent of about 3.5 per cent at 750° C., while at 1050° (the decomposition is about 48 per cent. Parr states th there were no values available on the vapor pressures at di ferent temperatures for the decomposition of calcium sulfat and that "from the decrease in the weight of ash and the co responding decrease in sulfur trioxide a dissociation cur may be constructed" which he assumes to be the dissociatic curve for calcium sulfate (Figure 1). From these data ar the decomposition data for calcium carbonate Parr conclude that the sulfated ash should be heated above 700° C. but th

TABLE III. EFFECT OF HEATING CALCIUM SULFATE A DIFFERENT TEMPERATURES FOR 4- AND 60-MINUTE PERIO

Temperature ° C.	Loss in Weight: 4-Minute Periods Sample 1 %	4-Minute Periods Sample 2 %	4-Minute Periods Av. %	60-Minute Periods Sample 1 %	60-Minute Periods Sample 2 %	60-Minute Periods Av. %	$CaSO_4$ Decomposed 4 min. %	$CaSO_4$ Decomposed 60 m. %
550	0.00	0.14	0.07	0.10	0.10	0.10	0.12	0.17
600	0.00	0.00	0.00	0.25	0.41	0.33	0.00	0.56
650	0.43	0.19	0.31	0.22	0.45	0.34	0.53	0.58
700	0.16	0.14	0.15	0.28	0.22	0.25	0.26	0.43
750	0.46	0.37	0.42	0.37	0.37	0.37	0.71	0.63
800	0.25	0.32	0.29	0.33	0.41	0.37	0.49	0.63
850	0.42	0.37	0.40	0.35	0.40	0.38	0.68	0.65
900	0.37	0.37	0.37	0.37	0.38	0.38	0.63	0.65
950	0.42	0.37	0.40	0.33	0.46	0.40	0.68	0.68
1000	0.38	0.37	0.38	0.37	0.54	0.46	0.65	0.78
1050	0.19	0.28	0.24	0.58	0.53	0.56	0.41	0.95
1100	0.89	0.85	0.87	1.32	1.41	1.37	1.48	2.33

[a] Assuming losses in weight by heating due to loss of SO_3 from CaS Conversion factor 1.7005.

TABLE IV. EFFECT OF HEATING CALCIUM SULFATE AT 750° FOR DIFFERENT PERIODS OF TIME

Time of Heating *Min.*	Loss in Weight: Sample 1 %	Sample 2 %	Av. %	$CaSO_4$ Decompose Average[a] %
4	0.33	0.43	0.38	0.65
8	0.57	0.43	0.50	0.85
12	0.51	0.47	0.49	0.83
16	0.52	0.42	0.47	0.80
20	0.52	0.42	0.47	0.80
24	0.37	0.38	0.38	0.65
28	0.42	0.37	0.40	0.68
32	0.47	0.38	0.42	0.71
36	0.47	0.42	0.45	0.77
60	0.47	0.37	0.42	0.71
80	0.69	0.57	0.63	1.07
110	0.36	0.43	0.40	0.68

[a] Assuming losses in weight by heating due to loss of SO_3 from CaS Conversion factor 1.7005.

TABLE V. EFFECT OF HEAT (750° C.) ON SULFATED ASH

Time Heated	Per Cent Sulfated Ash: Duplicate determinations	Per Cent Sulfated Ash: Difference	Per Cent SO_3: Duplicate determinations	Per Cent SO_3: Difference	Per Cent CaO: Duplicate determinations	Per Cent CaO: Difference	SO_3, Mole %	CaO, Mole %	SO_3/CaO Mole Ratio	Mineral Matter	Unit Coal
Min.											
4	48.06, 43.72	4.34	20.45, 21.20	0.75	5.35, 5.32	0.03	0.2602	0.0952	2.7332	47.26	17,872
Av.	45.89		20.83		5.34						
8	36.34, 37.17	0.83	8.49, 8.99	0.50	5.64, 5.54	0.10	0.1092	0.0997	1.0953	37.40	15,057
Av.	36.76		8.74		5.59						
12	36.40, 36.30	0.10	8.34, 8.29	0.05	5.72, 5.70	0.02	0.1039	0.1018	1.0206	36.96	14,951
Av.	36.35		8.32		5.71						
16	36.21, 36.46	0.25	8.29, 8.34	0.05	5.28, 5.84	0.56	0.1039	0.0991	1.0484	36.95	14,949
Av.	36.34		8.32		5.56						
20	36.19, 35.43	0.76	8.19, 7.64	0.55	5.30, 6.00	0.70	0.0989	0.1007	0.9821	36.37	14,813
Av.	35.81		7.92		5.65						
30	36.27, 36.25	0.02	7.84, 7.99	0.15	5.50, 4.98	0.52	0.0989	0.0934	1.0589	36.86	14,928
Av.	36.26		7.92		5.24						
40	... ...	..	7.74, ...	..	5.40, ..	..	0.0967	0.0963	1.0042	..	..
Av.	...		7.74		5.40						
60	36.11, 36.34	0.23	7.84, 7.84	0.00	5.36, 5.20	0.16	0.0979	0.0941	1.0404	36.83	14,921
Av.	36.23		7.84		5.28						

It should not be heated too hot or too long because of the possibility of decomposing calcium sulfate. Therefore, he chose the arbitrary temperature of 750° C. and a heating period of 3 to 5 minutes.

This short heating period is evidently not sufficient to effect removal of excess sulfur trioxide. Before using a longer heating period it seemed best to check the effect of heat on calcium sulfate, varying the temperature and time of heating.

In Table III are given data for the decomposition of calcium sulfate from 550° to 1100° C., heating for 4- and 60-minute periods at each temperature. The calcium sulfate used in these experiments was Mallinckrodt reagent quality $CaSO_4 \cdot 2H_2O$ which had been heated to 500° C. in platinum to remove the water of crystallization.

In Table IV will be found data on the effect of heating pure calcium sulfate at 750° C. for increasing periods of time.

Table III indicates that calcium sulfate is decomposed only slightly even at temperatures up to 1100° C. and with heating periods of 4 or 60 minutes. When the differences obtained in duplicate determinations as shown in Table III are taken into account, the decomposition is small indeed. According to Parr's curve, data for which were obtained by heating samples of sulfated ash, calcium sulfate is dissociated to the extent of about 34 per cent at 1000° C. On the basis of the evidence obtained from the experiments on calcium sulfate and a knowledge of the composition of coal ash, the author believes that Parr's curve is not a dissociation curve for calcium sulfate but rather indicates the decomposition of iron and aluminum sulfates present in the ash after treatment with sulfuric acid. This curve is in accordance with the known dissociation data for iron sulfate.

In Table IV it will be noted that increasing the time of heating calcium sulfate does not result in material increase of decomposition. From these data it appears that increasing the temperature or the time of heating the sulfated ash would be perfectly safe and desirable. This is in accordance with the findings of Valdez and Camps-Campins (*4*), who studied the restandardization of the sulfated ash method for determining ash in sugar products.

In view of the above facts, the effect of increased heating periods at 750° C. on the sulfated ash of sample C-997 was studied. This coal had a moisture-free total sulfur value of 2.87 per cent, a moisture-free mineral-matter carbon dioxide value of 4.49 per cent, and a moisture-free calorific value of 9569 B. t. u. Eight 1-gram portions of this sample were ashed and treated with sulfuric acid in accordance with the procedure described by Parr. The first portion was heated 4 minutes, the second 8 minutes, and so on, up to 60 minutes. The samples so heated were first cooled and weighed to give sulfated ash values and then dissolved and analyzed for sulfur trioxide and calcium oxide. The molar ratios of these two constituents were calculated, as well as mineral matter values and unit coal values, using the mineral matter values so obtained.

In Table V the duplicates of the portion heated for 4 minutes show a large deviation, the molar ratio of sulfur trioxide to calcium oxide is almost 3 to 1 (2.7332) whereas it should be 1 to 1, and the unit coal value calculated from the mineral matter so obtained is unreasonably high. The portion heated for 8 minutes shows a much smaller deviation between duplicates in per cent of sulfated ash, the molar ratio of sulfur trioxide to calcium oxide is only slightly greater than one (1.0953), and the calculated unit coal value is much more reasonable although possibly a little high yet. The portions which were heated 12 minutes and more in general show small deviations between duplicates in per cent of sulfated ash, the ratios of sulfur trioxide to calcium oxide are very close to one, and calculated unit coal values compare much more favorably with the county average value of 14,690 B. t. u. for this coal.

Conclusions

The following facts have been brought out by this investigation:

1. A heating period of 3 to 5 minutes at 750° as described by Parr is not sufficient to expel all sulfur trioxide in excess of that in calcium sulfate.
2. The so-called "dissociation curve for calcium sulfate" as published by Parr is not a dissociation curve for calcium sulfate. The loss may very probably be due to decomposition of iron and aluminum sulfates.
3. The dissociation of calcium sulfate is not materially increased by increased temperature from 750° to 1000° C. or by increased heating periods up to 110 minutes.
4. In making modified ash determinations on coal samples high in carbonate, Parr's procedure may be followed as far as the place where he directs that the sulfated ash be heated 3 to 5 minutes. Instead of heating as directed, the sulfated samples should be heated to constant weight, which should be reached in 15 to 20 minutes. This will ensure complete expulsion of excess sulfur trioxide.

Acknowledgment

The author wishes to express his appreciation to F. H. Reed and G. Thiessen for helpful suggestions in the preparation of this report and to C. S. Westerberg, J. W. Robinson, and L. D. McVicker for assistance in obtaining analytical results.

Literature Cited

(1) Am. Soc. Testing Materials, Standards on Coal and Coke, Designation D388-36T, p. 103.
(2) Parr, S. W., "Analysis of Fuel, Gas, Water, and Lubricants," 4th ed., pp. 54 and 213, New York, McGraw-Hill Book Co., 1932.
(3) Parr, S. W., Illinois State Geol. Survey, *Bull.* 3, 35 (1916).
(4) Valdez, R., and Camps-Campins, F., IND. ENG. CHEM., Anal. Ed., 9, 35 (1937).

RECEIVED March 27, 1937. Published by permission of the Chief, Illinois State Geological Survey, Urbana, Ill.

Scattering in the Near Infrared

A Measure of Particle Size and Size Distribution

D. L. GAMBLE AND C. E. BARNETT, The New Jersey Zinc Company, Palmerton, Pa.

The present methods of measuring the particle size and size distribution of powders are reviewed and the need of a new method is shown. Such a method, based upon the transmission of suspensions at various wave lengths in the visible and near infrared regions, is described. From the shape of the spectral transmission curve obtained, the relative average size and size distribution characteristics of powders can be estimated.

SINCE the reinforcing characteristics of pigments in rubber depend to a large extent upon their degree of fineness, there has been considerable interest in the measurement of the particle size of these materials. The principal methods which have been employed are: (1) the direct microscopic measurement, (2) the "count" method using the microscope with "dark field" illumination, (3) the indirect turbidimetric methods, and (4) the sedimentation rate and equilibrium sedimentation methods.

Present Methods of Measuring Particle Diameters

In the first of these methods, a minute amount of the material to be examined is dispersed in some mounting medium such as a melted gum or resin, on a microscope slide. A photograph may be made of the field and the actual diameter of each particle measured on an enlargement, or projection of the negative, or on a directly projected image. The principal advantage in this direct method of particle measurement is that it yields a size distribution curve and, therefore, is not restricted to a single average diameter. There are several objections to the method:

1. To obtain a satisfactory field for projection or photography, the mount should not be more than a few particles thick. This requires pressure on the cover glass or some other method of rubbing out the sample to a very thin layer and on such small amounts of material the procedure may result in a greater degree of deaggregation than it is possible to attain by the usual methods of commercial dispersion. According to the procedure of the individual investigator, all the aggregates in a sample may be broken up or only part of them. In most cases, the particle size as observed microscopically will be at considerable variance with the effective particle sizes in an oil or rubber dispersion. The fume products such as zinc oxide which are relatively free of aggregation will show this difference to a lesser degree than precipitated materials.
2. In the case of nonuniform materials, difficulty is experienced in bringing both coarse and fine particles into focus at the same time. The lack of uniformity experienced in many pigments makes the method extremely laborious because of the necessity of measuring a large number of particles in order to obtain truly representative data.

The dark-field count measurement of particle size as exemplified in the Goodyear method (*2*) gets away from the variations in grinding between the microscopic mount and actual application, since a rubber compound is used in making the counting suspension. However, this method gives only the diameter of the particle of average volume, D, from which the number of particles per gram may be calculated, but since no information as to size uniformity is obtained, the specific surface cannot be calculated. Its application is restricted to relatively fine and uniform pigments. In the case of samples which are relatively nonuniform, it has been shown (*4*) that the D diameter is of less significance in indicating the properties of a pigment in rubber than the diameter from which specific surface may be calculated, d_3, or the diameter of the particle of average weight, d_4. This is because the first named fails to evaluate the coarse particles in the degree to which they affect the behavior of paint or rubber. The significance of the several average diameters has been covered extensively by Green (*3*).

Wells (*9*) has given a résumé of the turbidimetric methods. The particle sizes of many of the pigments which are of interest in rubber and in paint are in the range where the turbidity or opacity of the suspension to visible radiation is due to both ordinary reflection and scattering phenomena. Since the two phenomena are affected by particle size in different ways, it is difficult to apply these methods to materials lying in the pigment range because of the complexities involved. Their application is restricted because of the marked influence of size distribution characteristics, and the particle size information obtainable is limited. In the writers' laboratory, for example, one of these methods (*7*) has been used extensively on relatively fine zinc oxide but it has been possible to correlate the results only with the d_1 or arithmetical mean diameter, which is probably the least significant average diameter as far as rubber properties are concerned. Others working with coarser particles (1 micron or larger in average diameter), where the turbidity is due to simple reflection and depends on the projected area of the particles, have been successful in correlating with specific surface. The methods are indirect in that one of the direct methods must be used for standardization, and are limited to samples which are similar to the standards in their uniformity of particle size distribution. Unless a practical dispersion is used in preparing the suspension, it is open to the same objections as the microscopic method in that the degree of dispersion of the test suspension is not necessarily the same as obtained in actual compounding.

Ultracentrifugal methods as developed by Svedberg (*8*) and others (*1*) are at present the best of the sedimentation schemes, but the necessary equipment is so expensive that it may be enjoyed by only a very few laboratories. However, recent work by Hauser and Reed (*5*) using a cylindrical bowl supercentrifuge appears to be very promising.

From the above discussion it is obvious that a fairly rapid method of attaining size distribution characteristics of pigments in a state comparable with that prevailing in actual use is highly desirable.

Pfund (*6*) has proposed the adaptation of infrared scattering to this purpose and the present paper merely represents the application and extension of his work on scattering in the near infrared region.

Rayleigh's Law of Scattering and Interpretation of Experimental Data

The extent to which radiation incident upon a suspension of particles in a transparent medium is transmitted is determined by the optical constants of the particulate material and the medium, the size of the suspended particles, and the wave

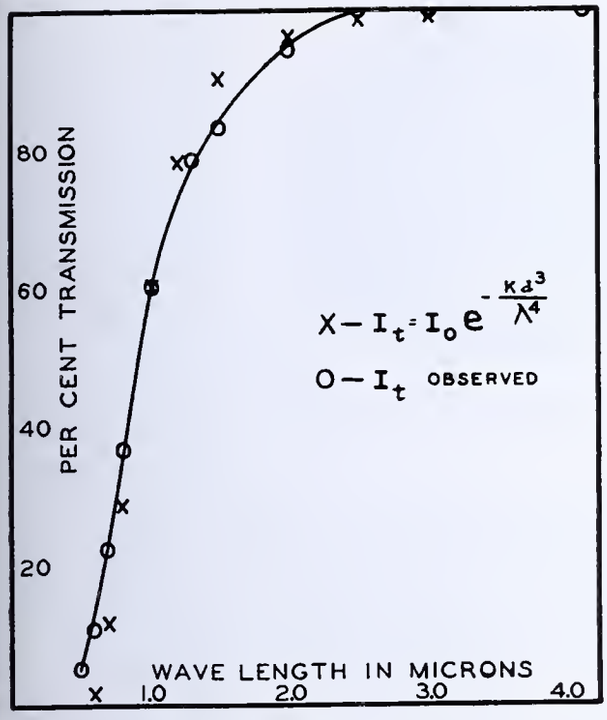

FIGURE 1. AGREEMENT BETWEEN CALCULATED AND OBSERVED TRANSMISSION

ngth of the radiation. The transparency of the suspension various wave lengths and the degree to which transparency aries with the wave length yield information as to the average ze and size distribution characteristics of the material. ayleigh has worked out the form of the wave length–transission curve for the case in which all particles present are nall in comparison with the short wave length limit of the ectral range employed. This curve may be calculated from e well-known Rayleigh scattering law. The Rayleigh forula for the transmission of radiation through a scattering edium according to Wien-Harms (*10*) is:

$$I = I_0 \exp. -\left[\frac{8\pi^3}{3}\left(\frac{n^2 - n_0^2}{n_0^2}\right)\left(\frac{3n_0^2}{n^2 + 2n_0^2}\right)\frac{NV^2}{\lambda^4}\right]$$

here
I = intensity of the transmitted radiation
I_0 = intensity of the incident radiation
n = refractive index of particle
n_0 = refractive index of medium
N = number of particles per cc.
V = volume of each particle
λ = wave length

By assuming the refractive index terms in the above equaon as constant, and since the mass per unit volume or conntration, c, is equal to $N \cdot V \cdot \rho$ where ρ is the specific gravity the particles, we may substitute $N \cdot V \cdot = \frac{C}{\rho}$ in the simplified xponent, $\frac{NV^2}{\lambda^4}K$, and obtain $\frac{CV}{\lambda^4}K$. At a constant concenation of one single pigment and considering the volume V s proportional to d^3, where d is the diameter of an equivalent herical particle, the equation becomes $I = I_0 \exp. -\left[\frac{Kd^3}{\lambda^4}\right]$. hus the intensity of the transmitted radiation varies dictly as the fourth power of the wave length and inversely as e third power of the particle diameter.

Figure 1 shows the experimental wave length–transmission rve for a uniform, fine particle size zinc oxide (0.3 micron) mpared with that calculated from the above equation. ood agreement is obtained over the region in which the parcle size–wave length relationships fulfill Rayleigh's assumptions. In calculating this curve, the value for the particle diameter was taken from a direct microscopic determination using the D diameter which is theoretically the diameter involved in the Rayleigh law. The constant K was calculated from the observed transmission at a wave length of 1.0 micron, a point at which the Rayleigh conditions should be fulfilled. It should be borne in mind that in extending the curve into the near infrared no corrections have been made for possible changes in the optical constants of the pigment and medium, and that the Rayleigh law should hold rigidly only when the ratio of the indices of refraction of the particle and medium approaches one.

When the Rayleigh conditions are not fulfilled and the particle size more closely approaches the wave length of the radiation, the transmission becomes less and less dependent upon the wave length, and when the particle becomes equal to or larger than the wave length it is no longer selective in its transmission characteristics and its opacity depends only upon the optical constants and the projected area of the particle.

The method employed here consists in merely measuring the spectral transmission of the pigment suspended in either oil or rubber from the visible blue to a wave length of about 4.0μ in the infrared. From the shape of this spectral transmission curve, the relative average size and size distribution characteristics can be estimated.

Typical transmission curves are shown in Figure 2. Low transmission in the short wave length region is indicative of small particle size and the greater the selectivity (slope of the transmission curve towards longer wave lengths) accompanying the low transmission the finer is the particle size. High transmission in the short wave length region without selectivity is indicative of coarse particle size. Low transmission in the long wave length region is also indicative of a large particle size. The average particle size of the pigment is roughly indicated by the point in the spectral transmission curve at which selectivity begins to develop. This occurs at a point where the particle size approaches the magnitude of the wave length.

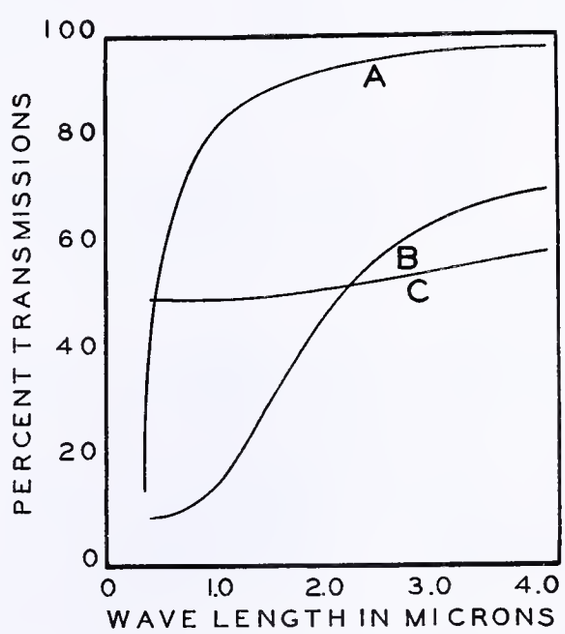

FIGURE 2. TYPICAL INFRARED TRANSMISSION CURVES

Curve A of Figure 2 represents a uniform material of extremely fine size, as indicated by the marked selectivity, high transmission at the long wave lengths, and low transmission at the extremely short wave lengths, the maximum opacity occurring at wave lengths shorter than those included in the illustration. Curve B represents a material of fairly small

average size, as indicated by low transmission and appreciable selectivity in the fairly short wave length region but containing a very appreciable portion of coarse material as indicated by the relatively low transmission in the long wave length region. Curve *C* represents a uniformly coarse material, as indicated by relatively high transmission in the short wave length region, nonselectivity in this same region, and relatively low transmission at long wave lengths.

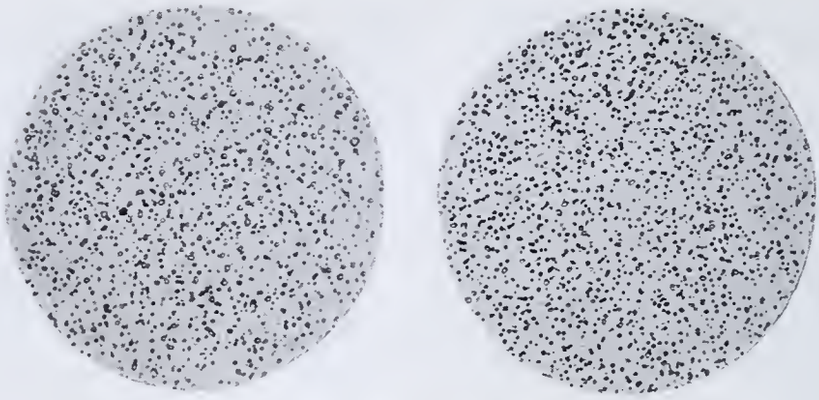

Figure 3. Photomicrographs Corresponding to Transmission Curves of Figure 4

An example of the differences which may exist between the particle size exhibited in a microscopic mount and that indicated by an infrared examination of the pigment in a practical grind is shown in the photomicrographs of Figure 3 and the corresponding infrared transmission curves of Figure 4. Microscopically, the two pigments, which have the same chemical composition, appear to be essentially equal in particle size, yet the infrared transmission curve corresponding to the pigment of *A* (Figure 3) shows its effective size to be extremely coarse while that corresponding to the pigment of *B* is very much finer. Judging from the point at which selectivity began to develop, the average particle size of *A* appears to be in the region of 2.0 microns while the average size of *B* is more nearly 0.5 micron, whereas microscopically the two pigments appear to be equal in average size at about 0.35μ. In practical paint grinds, pigment *A* shows the properties of an extremely coarse pigment and *B* those of a much finer material. For example, *A* has a tinting strength of 70 per cent of a given standard and *B*, 120 per cent of the same standard.

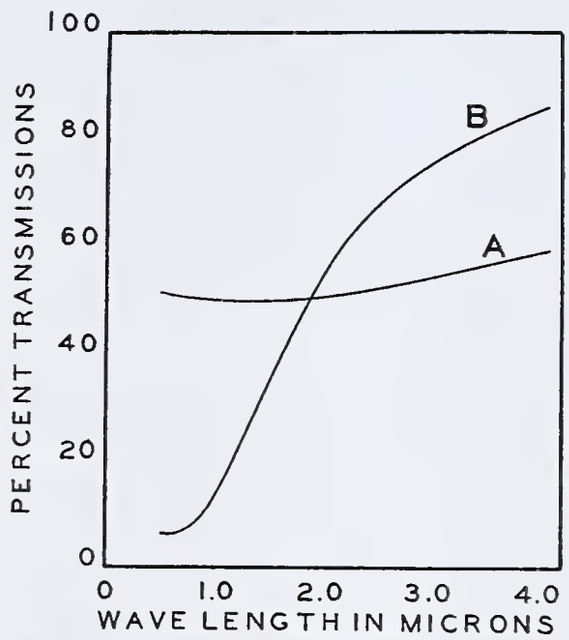

Figure 4. Transmission Curves of Pigments

Apparatus and Procedure

The usual type of rock salt prism spectrometer was employed in conjunction with a vacuum thermopile and suitable galvanometer for recording the energy transmitted. An ordinary single-filament automobile lamp is used as a source of radiation for measurements at wave length below 4.5 μ in the infrared. The samples to be measured are mounted in a holder which provides space for several samples and travels on a carriage mounted in front of the entrance slit of the spectrometer. The intensity of the transmitted radiation is measured and the assumption made that in the case of the white pigment the radiation not transmitted is lost by scattering.

If the material to be examined is a rubber pigment, it is dispersed in the usual way on a rubber mill. The compound is then made into a suspension of the desired concentration with carbon tetrachloride, and a cell consisting of two microscope cover slips separated by a brass ring is filled with this suspension. The percentage transmission of this suspension is measured in comparison with that of a similar suspension containing an equivalent amount of the unpigmented rubber compounds. The ratio of the galvanometer deflections obtained when the clear rubber suspension and the pigmented suspension are alternately moved in front of the entrance slit of the spectrometer gives the per cent transmission. It is obvious that the thickness of the cover slips and of the separating rings must be controlled accurately. If the pigment to be measured is principally of interest in paint, it is made into a paint which is diluted with the particular vehicle to the appropriate concentration, depending largely on the refractive index of the pigment. The measurements are made in comparison with a cell filled with the clear vehicle as the standard. Films of dry powders may be studied by mulling in butyl alcohol and spreading on plates of glass or rock salt in thin uniform layers and many other variations in the preparation of the sample are possible.

Experimental Application

Figure 5 shows the infrared transmission curves for a series of zinc oxides of varying particle size. The curves are labeled with the particle size of the zinc oxides which were determined by the dark field count method on rubber suspensions. The transmission curves were measured on similar suspensions. The coarser oxides in this series were made by reheating the finest one. As the particle size increases, the opacity of the pigments in the visible spectrum increases and then decreases in accordance with the results of Stutz and

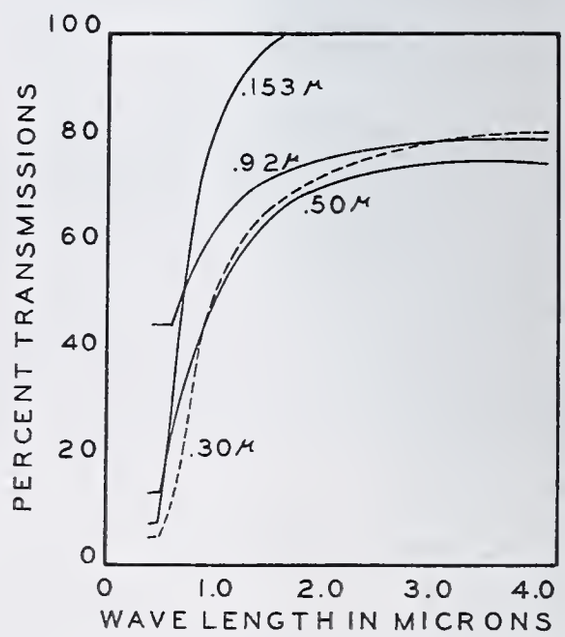

Figure 5. Transmission Curves of Zinc Oxides

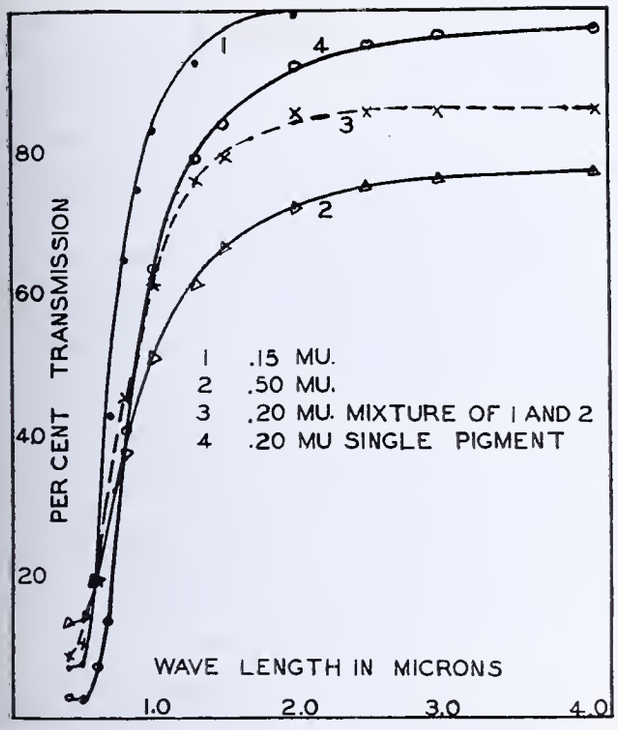

FIGURE 6. EFFECT OF MIXING MATERIALS OF DIFFERENT PARTICLE SIZE

Pfund (7). In the long wave length region, the three reheated oxides have approximately the same transmissions, indicating that there is a definite size limit beyond which the particles will not grow at a given temperature. All these curves show an unusually sharp break at the point where the transmissive characteristics of the pigment change from selective scattering to simple, nonselective reflection. The distinctiveness of this transition point is largely determined by the uniformity of particle size of the pigment and in this case the original zinc oxide was of a high degree of uniformity and was actually improved in this respect by the heat treatment.

Figure 6 shows the effect of mixing equal proportions of the oxides of 0.15μ and 0.50μ average diameters. By actual measurement the average particle size of this mixture in a rubber suspension was determined at 0.20μ. This is in excellent agreement with the value of 0.19μ, calculated from the average diameters of the components of the mixture. However, this average diameter fails to indicate the presence of the coarse particles in the mixture which are clearly shown by the infrared transmission curve, particularly by the transmissions at the longer wave lengths. In fact, the radiation transmitted by the mixture is an approximate average of that transmitted by the separate components over the entire range of the curves. The transmission curve for a zinc oxide of the same average diameter as that of the mixture, but with a size distribution corresponding to that of the finest oxide, is included in Figure 6 for comparison. This curve parallels that for the zinc oxide of 0.15μ average diameter but is slightly displaced towards longer wave lengths. That the coarse particles have a marked effect on the physical properties of rubber compounds is shown by the following data obtained in a formula containing 3 per cent of Hexa, 4 per cent of sulfur, 1 per cent of stearic acid, and 18.5 volumes of zinc oxide in addition to the rubber:

	Particle Size of Zinc Oxide	Tensile Strength	Energy to Break	Tear Resistance	Abrasion Index
	μ	*Lb./sq. in.*	*Ft. lb./cu. in.*		
1	0.15	3750	698	325	162
2	0.50	1850	282	149	68
3	0.20 (mixture)	2415	349	262	94
4	0.20 (single pigment)	3800	579	331	150

Although the average diameter of the mixed oxide is close to that of the finest pigment in the series, the physical properties are not far from those of the coarse component and are very much poorer than those of the zinc oxide having the same average diameter but a much more uniform size distribution.

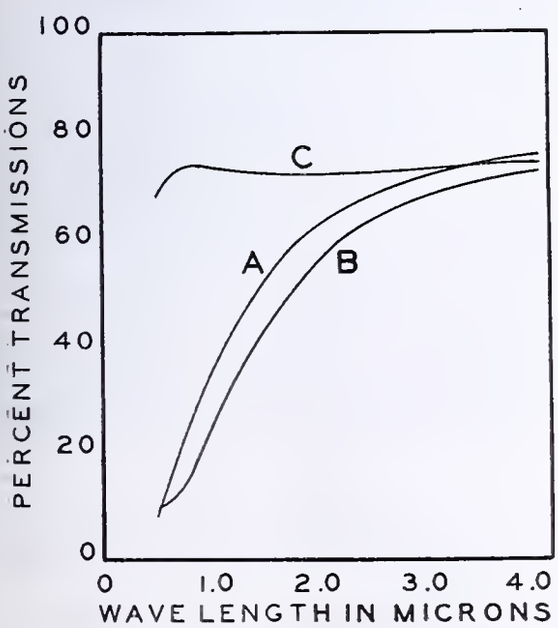

FIGURE 7. TRANSMISSION CURVES OF CARBON BLACK

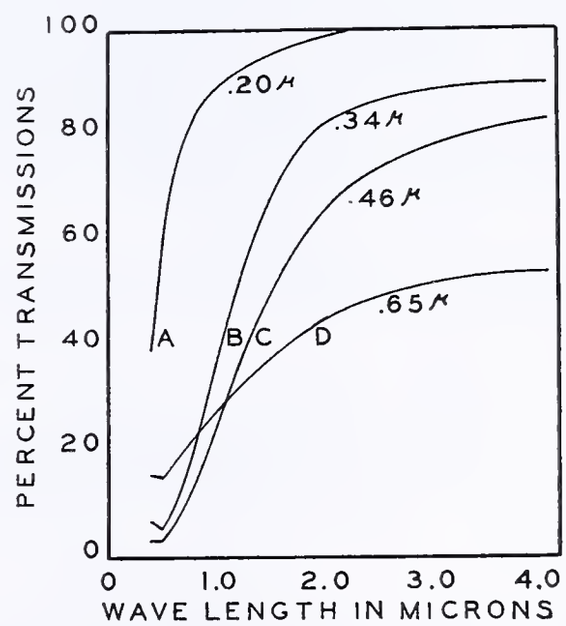

FIGURE 8. TRANSMISSION CURVES OF WHITINGS

Figure 7 shows the application of the infrared transmission method to rubber suspensions of carbon black. Curve *A* is for a channel process black, *B* a fine thermal decomposition black, and *C* an extremely coarse and highly aggregated thermal decomposition black. The physical properties of these three carbon blacks in rubber are in good agreement with the particle size characteristics as indicated by the infrared transmission curves. In a formula accelerated with diphenylguanidine and containing 25 volumes of each of the pigments, the following results were obtained at the optimum cures:

	Tensile Strength	Work of Extension	Tear Resistance	Abrasion Resistance
	Lb./sq. in.	*Ft. lb./cu. in.*		
A	4200	710	797	330
B	3070	565	338	95
C	2610	330	150	50

According to the above physical properties, pigments *A* and *B* are definitely reinforcing, while *C* has comparatively little reinforcing value. In the curves of Figure 7, *A* exhibits a high opacity in the visible spectrum, marked selectivity in this region, and a fairly high transmission in the infrared, all characteristics of a fine material. *B* is similar to *A* but with less opacity and less selectivity through the visible spectrum and slightly lower transmission in the long wave length region, while the selective portion of the curve is shifted slightly towards longer wave lengths. All these characteristics show that *B* has a larger effective average particle size and contains a greater proportion of very coarse particles than *A*. The curve for *C* shows a high transmission throughout the entire spectrum with no selectivity, indicating an extremely large effective particle size. The slope of curve *C* in the visible spectrum is due to superimposed selective absorption of light by the black.

In Figure 8 are given transmission curves for several whitings in rubber. The average diameters shown were determined by the count method on the same rubber suspensions from which the curves were obtained. The high transmission in the near infrared and the lack of opacity accompanied by marked selectivity in the shorter wave length region indicate *A* to be a fine material of high uniformity. *B* and *C* are coarser materials. Both exhibit very similar selectivity in the short wave length region but the appreciably greater opacity of *C* in the near infrared indicates that it differs from *B* in containing a larger fraction of coarse particles, which accounts for its somewhat larger average diameter. *D* is indicated to be a very nonuniform material. Its unusually high opacity throughout the long wave length region shows the presence of a large fraction of coarse material. The rapidity with which it develops selectivity on passing into the short wave length spectral range indicates the presence of a very appreciable portion of material fine in comparison to the wave length of visible light. Thus this material is indicated to be highly nonuniform with a large size range.

Summary

The method described permits, in many cases, an estimation of relative particle sizes and yields certain qualitative information regarding the size distribution characteristics. I big advantage lies in allowing a relatively rapid examinati of the material in the state in which it is actually being use This has been found very helpful since, especially in precip tated pigments, the effective particle size has been found vary over wide ranges, depending upon the treatment of tl pigment. Work has been planned which should make it po sible to obtain quantitative results.

The method is limited in the case of colored materials b the selective absorption which is superimposed on the refle tion and scattering phenomena. Because of the effect of tl refractive index difference between the suspended particl and the medium, intercomparisons are limited to systems which the optical constants are similar. Although it would b possible to obtain more data on size distribution by extendir the measurements further into the infrared, this has not bee done because of the heavy absorption of most suspensic media in this region and corresponding changes in optic constants. In spite of these limitations, the method h proved very helpful in pigment investigations.

Acknowledgment

The authors' thanks are due to N. A. Brown for the particl size determinations by the count method and to Albert Smith, R. J. Boyer, and John Fleming for assistance with tl infrared transmission measurements.

Literature Cited

(1) Bailey, Nichols, and Kraemer, *J. Phys. Chem.*, 40, 1149 (1936)
(2) Gehman and Morris, Ind. Eng. Chem., Anal. Ed., 4, 157 (1932
(3) Green, *J. Franklin Inst.*, 204, 713 (1927).
(4) Haslam, *Rubber Age* (N. Y.), 32, 89 (1932).
(5) Hauser and Reed, *J. Phys. Chem.*, 40, 1169 (1936).
(6) Pfund, *J. Optical Soc. Am.*, 24, 143 (1934).
(7) Stutz and Pfund, Ind. Eng. Chem., 19, 51 (1927).
(8) Svedberg and Rinde, *J. Am. Chem. Soc.*, 45, 943 (1923).
(9) Wells, *Chem. Rev.*, 3, 331 (1927).
(10) Wien-Harms, "Handbuch der experimentalphysik," Vol. 1 p. 368, Leipzig, Akademische Verlagsgesellschaft, 1928. "Lich zerstreuung," by Gans.

Received April 17, 1937. Presented before the Division of Rubber Cher istry at the 93rd Meeting of the American Chemical Society, Chapel Hil N. C., April 12 to 15, 1937.

The Use of an Electric Heater for the Lane and Eynon Titration of Reducing Sugars

D. T. ENGLIS and E. G. LYNN, University of Illinois, Urbana, Ill.

SEVERAL years ago Lane and Eynon (*3*) proposed a method for the determination of reducing sugars, involving a complete reduction of a definite amount of Fehling's solution by a titrated volume of sugar solution, which can vary within certain limits. The end point is detected by means of methylene blue as the inside indicator. The method has been carefully studied (*1*, *2*) and amplified, and on account of its rapidity is becoming widely used.

The solution is brought to a boil under carefully regulated temperature conditions and the final small quantity of sugar solution is added to the boiling reaction mixture. This makes necessary holding or supporting the buret over the reaction flask, which must be kept boiling gently to prevent atmospheric oxidation of the indicator after the end point is reached. When the flask is heated over a gas burner, as is ordinarily specified, the analyst must turn the flame high in order to maintain the desired temperature. Because of the stray heat coming up around the outside of the flask, manipulation of the buret in the final additions of the sugar solution is ofte troublesome, and the buret and solution which it contain may reach a temperature which makes questionable th volume used.

Adoption of a suitable electrical heating device, which ca be adjusted to give the proper rate of heating, tends to mini mize these difficulties. The authors have used a Cenco heate (2.3 amperes at 110 volts) with 2.5-inch opening and variabl rheostat with good success. Other analysts may find this o similar heaters advantageous.

Literature Cited

(1) Assoc. Official Agr. Chem., *J. Assoc. Official Agr. Chem.*, 9, 3 (1926).
(2) *Ibid.*, 12, 38 (1929).
(3) Lane and Eynon, *J. Soc. Chem. Ind.*, 42, 32T (1923).

Received May 20, 1937.

Determination of Unsaponifiable Matter in Rosin

I. E. KNAPP,[1] Newport Industries, Inc., Pensacola, Fla.

PUBLISHED methods for determining the unsaponifiable matter in rosin are few in number and of doubtful accuracy. Both Griffin's method (*2*) and the proposed A. S. T. M. method (*1*) call for the ether extraction of a dilute (2.5 to 5.0 per cent) solution of the saponified rosin soap. Rosin soap is strongly hydrolyzed in aqueous solution, and ether extracts appreciable quantities of resin acids and/or rosin soap from such a solution. The above methods make no attempt to remove these impurities from the ether solution. Moreover, the final residue is dried under conditions which cause serious losses by volatilization. Matlack and Palkin (*3*) recognized the presence of both resin acids and soaps in the residue obtained by the A. S. T. M. method. They washed the ether solution with dilute alkali and water until the wash water showed no cloudiness on acidifying, thus ensuring the absence of rosin soap. They also recognized the volatility of the unsaponifiable matter and dried the final residue in a vacuum at 70° C.

In the present study it has been found that even with the procedure of Matlack and Palkin the final residue contains an appreciable quantity of titratable acidity. On an average rosin this is equivalent to from 0.3 to 0.6 per cent of resin acids (calculated as abietic acid). In the method described below, the final residue, after weighing, is dissolved in neutral alcohol and titrated with standard alcoholic caustic alkali. The equivalent quantity of resin acid, calculated as abietic acid, is then deducted from the final residue to yield the net unsaponifiable matter in the rosin. This correction is similar to that recommended in the determination of the unsaponifiable matter in soap (*5*).

In order to ensure complete extraction of the unsaponifiable matter a continuous extractor was designed as shown in Figure 1. (This special piece was constructed from Pyrex glass by the Scientific Glass Apparatus Co., Bloomfield, N. J. The Erlenmeyer flask and reflux condenser, shown in Figure 2, each with a standard-taper ground-glass connection, were stock items obtained from the same company.) This is similar to the apparatus described by Palkin, Murray, and Watkins (*4*), with the following modifications:

1. The construction of the inner tube or solvent distributor is simplified by having only three small holes in the bulb.
2. The depth of the soap layer is increased so that the droplets of solvent travel further and are therefore in longer contact with the soap solution.
3. The use of standard-taper ground-glass joints is advantageous in preventing contamination and loss of solvent.

The operation of the extractor needs little explanation. As shown in Figure 2, the solvent (ether) is placed in the Erlenmeyer flask which is set in a beaker of warm water. The condensate collects in the inner tube until the "head" becomes sufficient to force the solvent out through the small holes at the bottom of the tube. The droplets of solvent then rise through the aqueous rosin soap solution, collect in a layer above it, and overflow back into the flask. Thus the rosin soap is continuously brought into contact with fresh solvent.

Procedure

The necessary preliminary saponification of the rosin is conducted as follows:

Dissolve 30.00 grams of rosin in 200 ml. of anhydrous alcohol in a 500-ml. round-bottomed flask, and to the slightly cooled solution add 6.0 ml. of 50 per cent sodium hydroxide solution (sp. gr. 1.52). Boil gently under a reflux condenser for 1.5 hours and then add 150 ml. of water together with an ebullition tube. Set the flask in an oil or glycerol bath and connect it to a condenser. Hold the temperature in the bath at 120° to 130° C. until the total volume of the distillate amounts to 210 ml. Transfer the rosin soap solution quantitatively to a 250-ml. volumetric flask, cool, and dilute to the mark with distilled water.

To obtain the unsaponifiable matter, pipet a 50-ml. aliquot into the extractor. Place 100 ml. of ethyl ether in the Erlenmeyer flask, connect it to the extractor, and set it in a water bath which is maintained at 50° to 55° C. by an electric hot plate. Continue the extraction for 6 hours with the reflux rate approximately 3 drops per second. Pour the ether solution into a 500-ml. Squibb separatory funnel and rinse out the flask with two 15-ml. portions of fresh ether. Shake thoroughly with 50 ml. of 1 per cent sodium hydroxide solution. Draw off the aqueous layer into a second separatory funnel and to it add 30 ml. of fresh ether; shake thoroughly and discard the aqueous layer. Run the ether back into the first separatory funnel and wash the combined ether solutions three times with 50-ml. portions of distilled water. Run the washed ether solution into a carefully tared 250-ml. flask, rinsing the separatory funnel with 15 ml. of fresh ether. Immerse the flask in a water bath and distill off the ether. Then raise the temperature of the water to 67° to 70° C. and maintain a vacuum of 20 to 25 mm. of mercury for 30 minutes. Remove the flask, cool, and weigh. The material recovered is the "net washed extract." Dissolve

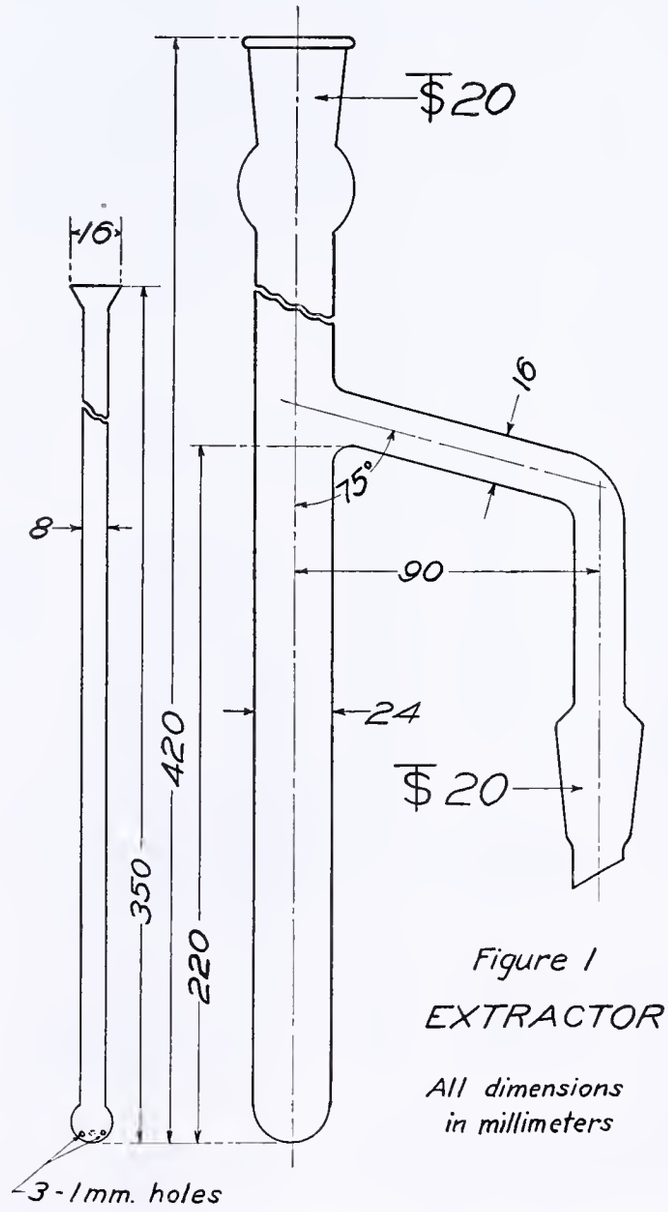

Figure 1
EXTRACTOR
All dimensions in millimeters

[1] Present address, Goodyear Yellow Pine Co., Picayune, Miss.

TABLE I. EFFECT OF WASHING THE ETHER EXTRACT

No.	Rosin Kind	Rosin Grams	Apparatus	Solvent	Gross Extract Grams	Gross Extract %	Net Washed Extract Grams	Net Washed Extract %	Loss on Washing %
1902	B wood	10.00	Funnels 6X	Ethyl ether	2.303	23.03	1.817	18.17	4.86
4910	B wood	10.00	Continuous	Ethyl ether	2.569	25.69	2.030	20.30	5.39
4911	B wood	10.00	Continuous	Ethyl ether	2.652	26.52	2.066	20.66	5.86
5915	B wood	10.00	Continuous	Petroleum ether	1.295	12.95	1.165	11.65	1.30
1904	B wood	10.00	Continuous	Toluene	2.230	22.30	1.871	18.71	3.59

it in about 40 ml. of neutral alcohol and titrate with standard alcoholic potassium hydroxide (preferably 0.1 N), to a phenolphthalein end point.

$$\frac{(\text{Weight of net washed extract}) \times 100}{\text{Weight of rosin in aliquot } (= 6.00)} = \%\text{ of extract, } E$$

$$\frac{(\text{Ml. of standard alkali}) \times \text{normality} \times 30.2}{\text{Weight of rosin in aliquot } (= 6.00)} = \%\text{ of abietic acid, } A$$

Then

$$E - A = \%\text{ of unsaponifiable matter}$$

Discussion

It was very difficult to obtain satisfactory results when individual samples were saponified and extracted, chiefly because of the difficulty of transferring the rosin soap solution into the extractor quantitatively without using too large a volume of water. The procedure was greatly simplified by saponifying a large sample and transferring aliquot portions of the soap solution to the extractor by means of a pipet. This procedure also provides sufficient rosin soap solution for check determinations.

The removal of the alcohol from the soap solution is likely to be accompanied by severe bumping and foaming unless the foregoing directions are followed in detail. It appears to be necessary to distill practically all the alcohol out of the soap solution, for if this is not done a considerable volume of ether will dissolve in the soap layer during the extraction step. The result may be that the soap solution will overflow into the ether reservoir.

Numerous attempts were made to increase the size of the sample so that the 50-ml. aliquots would contain the equivalent of 10.00 grams of rosin. However, when the concentration was appreciably greater than 12 per cent there was considerable separation of rosin soap. Even the 12 per cent solution may become cloudy on standing overnight at a temperature as low as 20° C., but it will again become homogeneous on warming slightly. These statements apply to gum rosins and to decolorized wood rosins. In the special case of rosins of abnormally high unsaponifiable content, such as B wood resin, the size of the sample may be increased to 40.00 grams—i. e., 8.00 grams in the 50-ml. aliquot—without separation or clouding. (The U. S. Department of Agriculture has ruled that the dark-colored resinous material which is obtained as a by-product in the decolorization of FF wood rosin shall not be sold as a "rosin" but shall carry the special designation "B wood resin.")

The time required for complete extraction varies somewhat with the kind of rosin. Tests made with WW gum and WW wood rosins showed practically complete extraction in 3 hours; continued extraction with fresh ether for an additional 8 hours showed only 0.10 to 0.15 per cent net extract. But with B wood resin this additional extraction time yielded more than 1.0 per cent net extract. With this special resin the extraction should be run for at least 10 hours.

As to the choice of solvent, Tables I and II show unmistakably that ethyl ether is superior to petroleum ether. While petroleum ether does not extract as large a proportion of resin acids and/or soaps as does ethyl ether, it does not extract all of the unsaponifiable matter, especially from the lower grades of rosin such as FF rosin and B wood resin. Ethyl ether appears to be generally applicable to all kinds of rosin. A few extractions were made with benzene. This solvent appears to be satisfactory on dark rosin, but on the pale grades it yields low results and produces troublesome emulsions.

The necessity for washing the ether extract to remove resin acids and/or soaps is shown by Table I. In these runs the ether solution was evaporated directly and weighed to give the gross extract (column 5). This was then redissolved in ether and the solution was washed with dilute alkali and water (as described above) and again evaporated and dried to give the net washed extract (column 6). It is evident from these results that the omission of the washing yields extremely high results.

Very little trouble has been experienced with emulsions in the washing of these ether solutions. In those few cases where an emulsion was formed, the addition of a few cubic centimeters of 1 per cent sodium hydroxide solution caused the emulsion to break quickly and completely.

The data show that the separatory-funnel method does not ex-

TABLE II. UNSAPONIFIABLE MATTER IN VARIOUS ROSINS

No.	Rosin Kind	Rosin Grams	Apparatus	Solvent	Net Washed Extract Grams	Net Washed Extract %	Titratable Acids (Calcd. as Abietic) %	Net Unsaponifiable Matter %
28A	B wood	8.00	Funnels 3X	Ethyl ether	1.488	18.60	...	...
29A	B wood	8.00	Funnels 3X	Ethyl ether	1.568	19.60	...	...
28B	B wood	8.00	Funnels 6X	Ethyl ether	1.718	21.47	0.67	20.80
29B	B wood	8.00	Funnels 6X	Ethyl ether	1.725	21.56	0.67	20.89
19	B wood	8.00	Continuous	Ethyl ether	1.808	22.60	1.00	21.60
24	B wood	8.00	Continuous	Ethyl ether	1.800	22.50	0.79	21.71
30	B wood	8.00	Continuous	Ethyl ether	1.840	22.62	0.88	21.74
37	B wood	8.00	Continuous	Petroleum ether	1.330	16.62	0.50	16.12
38	B wood	8.00	Continuous	Petroleum ether	1.332	15.65	0.40	16.25
35	B wood	8.00	Continuous	Benzene	1.784	22.30	0.70	21.60
36	B wood	8.00	Continuous	Benzene	1.777	22.46	0.80	21.66
14	FF wood	8.00	Continuous	Ethyl ether	1.100	13.75	0.75	13.00
15	FF wood	8.00	Continuous	Ethyl ether	1.094	13.67	0.67	13.00
16	FF wood	8.00	Continuous	Petroleum ether	0.836	10.45	0.11	10.34
17	FF wood	8.00	Continuous	Petroleum ether	0.845	10.56	0.06	10.50
01	WW wood	6.00	Continuous	Ethyl ether	0.555	9.25	0.27	8.98
02	WW wood	6.00	Continuous	Ethyl ether	0.540	9.00	0.18	8.82
03	WW wood	6.00	Continuous	Petroleum ether	0.536	8.93	0.10	8.83
04	WW wood	6.00	Continuous	Petroleum ether	0.526	8.77	0.09	8.68
05	WW wood	6.00	Continuous	Benzene	0.491	8.18	0.09	8.09
06	WW gum No. 1	7.50	Continuous	Ethyl ether	0.888	11.84	0.31	11.53
13	WW gum No. 1	7.50	Continuous	Ethyl ether	0.888	11.84	0.34	11.50
26	WW gum No. 2	6.00	Continuous	Ethyl ether	0.657	10.95	0.31	10.64
27	WW gum No. 2	6.00	Continuous	Ethyl ether	0.675	11.25	0.45	10.80
39	WW gum No. 2	6.00	Continuous	Benzene	0.520	8.67	0.15	8.52
40	WW gum No. 2	6.00	Continuous	Benzene	0.504	8.40	0.10	8.30
20	N gum	6.00	Continuous	Ethyl ether	0.609	10.15	0.36	9.79
22	N gum	6.00	Continuous	Ethyl ether	0.612	10.20	0.52	9.68
31	H gum	6.00	Continuous	Ethyl ether	0.685	11.42	0.89	10.53
32	H gum	6.00	Continuous	Ethyl ether	0.675	11.25	0.59	10.66

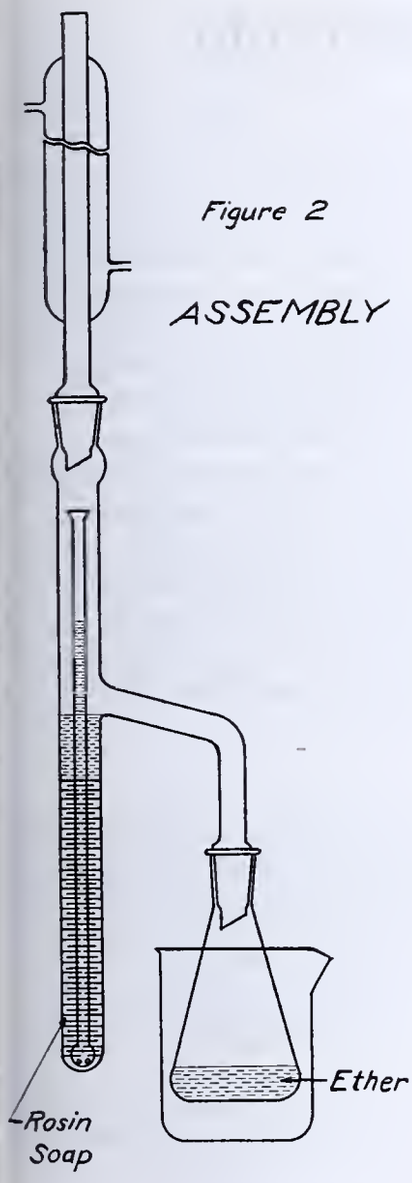

tract all the unsaponifiable matter. Even when the rosin soap solution is shaken out with ether six times, instead of the customary three times, the quantity of neutral material extracted (Nos. 28B and 29B in Table II) is distinctly lower than that obtained by the continuous extractor (No. 30) on an aliquot of the same soap solution.

The unsaponifiable matter in rosin is distinctly volatile at 100° C., and special precautions must be taken in drying it. The data in Table III show the losses on drying various samples under different conditions. The loss in the oven at 105° C. (No. 78) is obviously excessive. A moderate vacuum at 100° C. (No. 11) produces a similar loss in weight. A high vacuum at temperatures above 75° C. (No. 14) is also too severe. The best results were obtained with a vacuum of 23 mm. at a temperature under 70° C. as shown in No. 15, but even under these conditions the residue could not be dried to a constant weight. At lower temperatures (60° C.) there was a tendency for droplets of water to remain under the residue, making it impossible to obtain an accurate result. It was finally decided to dry the residue for 30 minutes under a 20- to 25-mm. vacuum at a temperature of 67° to 70° C. in the water bath. Under these more or less arbitrary conditions satisfactory check determinations were obtained, as shown in Table II.

The saponification number of a rosin is the number of milligrams of potassium hydroxide required to saponify one gram of rosin. This can, of course, be expressed as a percentage of abietic acid (molecular weight 302). It would seem as if the difference between this percentage and 100 might be a rough approximation of the unsaponifiable matter in the rosin, but the data presented in Table IV show that such an assumption is incorrect. The saponification number of each of the rosins used in this study was determined and then the unsaponifiable matter was calculated by difference (column 5). The results show very poor correlation with the percentages actually found by analysis (column 6). The differences do not appear to be related either to the source or the grade of the rosin. It is possible that in certain rosins the presence of resin acids having a molecular weight lower than that of abietic acid may be partly responsible. This is not the whole explanation, however, for if it were, B wood resin should show the greatest difference; actually it shows the least. Matlack and Palkin (*3*) found a somewhat similar anomaly which they could not explain.

Table III. Losses on Drying Unsaponifiable Matter

No.	Drying Time	Min.	Temp. ° C.	Pressure Mm. Hg	Net Weight Gram	Loss in Weight During period Gram	Total Gram
78		20	100	300	0.991	...	...
	Additional	30	105	762	0.956	0.035	0.035
	Additional	60	105	762	0.919	0.037	0.072
11		20	100	300	0.825	...	...
	Additional	30	100	300	0.793	0.032	0.032
14		30	72	23	1.100	...	...
	Additional	30	77	23	1.069	0.031	0.031
	Additional	30	76	23	1.056	0.013	0.044
	Additional	30	73	23	1.048	0.008	0.052
15		30	70	23	1.100	...	...
	Additional	30	68	23	1.097	0.003	0.003
	Additional	30	68	23	1.095	0.002	0.005
	Additional	30	65	23	1.094	0.001	0.006

Table IV. Comparison of Found and Calculated Values for Unsaponifiable Matter

Rosin	Acid No.	Saponification No.	Abietic Acid Calculated as Saponifiable %	Unsaponifiable Matter Calculated by difference %	Found[a] %	Difference %
B wood	108	144	77.70	22.30	21.68	0.38
FF wood	153	169	91.10	8.90	13.00	4.10
WW wood	168.0	170.5	91.91	8.09	8.90	0.81
WW gum No. 1	159.8	168.4	90.78	9.22	11.51	2.29
WW gum No. 2	157.6	167.0	90.03	9.97	10.72	0.75
N gum	160.3	174.2	93.91	6.09	9.73	3.64
H gum	160.1	168.3	90.68	9.32	10.60	1.28

[a] Mean values from Table II obtained with ethyl ether in the continuous extractor.

Acknowledgment

Grateful acknowledgment is made to R. C. Palmer, chief chemist of Newport Industries, Inc., for many helpful suggestions, and also to the management of Newport Industries for permission to publish the results of this investigation.

Summary

In determining the unsaponifiable matter in rosin, data show that the results obtained by previously published methods are not accurate. A method is described which eliminates many of the sources of error in these former methods. The use of a continuous extractor of special design, requiring a minimum of attention during the ether extraction, offers a marked improvement over the tedious separatory-funnel method. The method described shows a reproducibility of 0.25 per cent or better on check determinations, and appears to be generally applicable to the commercial grades of both gum and wood rosin.

Literature Cited

(1) Am. Soc. Testing Materials, *Proc.* 33 (I), 439 (1933).
(2) Griffin, R. C., "Technical Methods of Analysis," 2nd ed., pp. 436–7, New York, McGraw-Hill Book Co., 1927.
(3) Matlack and Palkin, *J. Assoc. Official Agr. Chem.*, **18**, 466–71 (1935).
(4) Palkin, Murray, and Watkins, Ind. Eng. Chem., **17**, 612 (1925).
(5) Smither, Divine, Long, et al., *Ibid.*, Anal. Ed., **9**, 2 (1937).

Received February 23, 1937.

Analysis of Mixtures of Furfural and Methylfurfural

ELIZABETH E. HUGHES AND S. F. ACREE, National Bureau of Standards, Washington, D. C.

The estimation of pentosans and methylpentosans in natural products is based upon the amount of furfural and methylfurfural which they yield upon distillation with 12 per cent hydrochloric acid. It is difficult to distinguish between these aldehydes because of the similarity of their chemical and physical behaviors. The gravimetric procedure usually employed is not satisfactory. No volumetric procedure which can be applied to mixtures of the two has been reported.

In studying the reaction of bromine with methylfurfural in 1 *N* hydrochloric acid at 0° C., it was found that the second mole of bromine reacts more rapidly with methylfurfural than with furfural. The amounts of individual aldehydes are calculated from the results of titrations of aliquot portions at two different periods of time, using equations expressing the molar consumption of bromine by the mixture. This volumetric method has been found simpler in application and more reliable than the gravimetric procedure. The mean error of the calculated values is about 0.5 mg. in samples which contain from 3 to 50 mg. of methylfurfural.

THE pentosans and methylpentosans, together with some hexose derivatives present in natural products, yield furfural, methylfurfural, and ω-hydroxymethylfurfural upon distillation with mineral acids. It is difficult to distinguish between these distillation products because of the similarity of their chemical and physical behaviors. When pentosans are determined in wood, methylfurfural may be present in the distillate up to about 5 per cent of the furfural. One to 2 per cent of ω-hydroxymethylfurfural may be slowly formed from hexoses, starch, and cellulose, and may be a cause of error in the pentosan determination. This error may be largely avoided if the distillation is stopped when there is no appreciable further evolution of furfural, as indicated by the aniline acetate test. The production of furfural is rapid and is almost completed before much ω-hydroxymethylfurfural is collected in the distillate.

No accurate method for determination of mixtures of furfural and methylfurfural has been reported. Both may be determined gravimetrically by using phloroglucinol (*1*), thiobarbituric acid (*4*), or better, 2,4-dinitrophenylhydrazine (*10, 15, 18*). In working with pure methylfurfural distilled from rhamnose it was found that the methylfurfural phloroglucide was more soluble in hot ethyl alcohol than the furfural phloroglucide (*5, 6, 19*). The usual method of determination of pentosans includes an extraction of the phloroglucides, using Krober's tables (*11*) for solubility corrections. The method, which is long and tedious, is not satisfactory as a means of determining these aldehydes in mixtures because investigators are not in agreement on the empirical correction factors (*4, 7, 10*).

Furfural has been determined volumetrically with such reagents as hydroxylamine, potassium bisulfite, and phenylhydrazine, and more successfully by various modifications of the excess bromine method (*8, 12, 13, 14*). Attempts which have been made to apply volumetric methods to methylfurfural have been without success (*10, 12*).

Other investigators have studied colorimetric and volumetric procedures, and the effect of methylfurfural and ω-hydroxymethylfurfural on the pentosan determination (*2*). Most of the methods are discussed by Dorée (*3*) and Schorger (*17*). The large error in the determination of furfural when methylfurfural is present has been considered unavoidable.

The reaction of bromine with furfural in 1 *N* hydrochloric acid at 0° C. has been reported (*8*). In applying the method to methylfurfural it was found that the second mole of bromine reacts more rapidly with methylfurfural than with furfural, and that the difference in the rates of reaction is sufficiently large at 0° C. to distinguish quantitatively between these two aldehydes. The calculation of the amounts of individual aldehydes present is based upon titrations of unused bromine in two aliquot portions of the solution reacting for different periods of time. The analysis is accurate to within about 0.5 mg. of methylfurfural present in samples which contain from 3 to 50 mg.

Experimental Procedure

Methylfurfural was prepared from sucrose by the method of Rinkes (*16*). It distilled at 86–7° C. at 21 mm. and gave quantitative precipitation with thiobarbituric acid and 2, 4-dinitrophenylhydrazine.

The procedure was the same as that used in experiments on furfural (*8*). The freshly distilled methylfurfural was sealed in glass bulbs to prevent oxidation of the aldehyde and loss in weighing. Solutions were prepared by breaking the weighed bulbs under water in a volumetric flask and aliquot portions were withdrawn by means of pipets. The methylfurfural solution was added to 200 ml. of 1 *N* hydrochloric acid in a special side-arm titration flask, a sketch of which was given in an earlier paper (*9*). One arm of the flask contained 25 ml. of approximately 0.1 *N* potassium bromate-bromide solution and the other arm contained 10 ml. of approximately 10 per cent potassium iodide solution. Several flasks were prepared with reagents for each series of experiments. The titration flasks were modified by attaching to each ground-glass stopper a thermometer well which extended into the solution. By this means the temperature may be observed without opening the flask.

In these experiments an ice bath was used to cool the solutions. About 0.5 hour was required for them to attain a temperature of 0° to 0.5° C., which was maintained throughout the reaction. Shaved ice may be used to cool the solutions more quickly or they may be placed in a refrigerator regulated at 0° C. The reaction was timed with a stop watch which was started when the bromate solution began to flow from the side arm into the methylfurfural and hydrochloric acid solution. At the end of the desired period of time the potassium iodide solution was added from the other side arm and the flask shaken to ensure complete absorption of bromine vapor. The iodine thus liberated was titrated with 0.1 *N* sodium thiosulfate using starch as an indicator. Blanks were run in a similar manner.

The molar consumption of bromine at any ›riod of time is given by the expression

$$\frac{\text{(milliequivalents of bromine consumed)} \times (0.05505)}{\text{grams of methylfurfural present}}$$

here the amount of bromine consumed is the fference between the number of milliequivaents of bromate solution added and the number milliequivalents of thiosulfate used in the tiation.

Reaction of Methylfurfural with Bromine in Normal Hydrochloric Acid

Reaction at Room Temperature. Prelimiary experiments at room temperature showed at the consumption of bromine was not mited to one or two moles per mole of methylfurfural, ut was about 2.3 moles in 1 minute and 2.4 moles in 30 inutes. The effect of temperature upon the rate of the eaction necessitated accurate control of temperature of the olution for consistent results. As with furfural, it was found ore satisfactory to make measurements at 0° C. than at room emperature.

Reaction at 0° C. Four sizes of methylfurfural samples ere used, varying from 12 to 50 mg. The size of the samles was limited by the amount of bromate added, this being .5 milliequivalents in all the experiments. The periods of ime used were 5, 10, 20, 30, 40, and 60 minutes. The data iven in Table I show the number of milliequivalents of broine consumed and the corresponding molar consumption of romine for each period of time. The molar ratio of broine consumed to aldehyde present as a function of time is lustrated in Figure 1. The curves for methylfurfural repesent the reaction of approximately 13-, 26-, 46-, and 51-ng. samples of methylfurfural with bromine at 0° C. under he conditions given above. For comparison, the curve for rfural from data given in an earlier paper (*8*) is also shown. t is readily seen that methylfurfural reacts rapidly with the rst mole of bromine, as does furfural; and that the reaction ontinues at a fairly rapid rate until over 2.3 moles of bromine re consumed, whereas the reaction of the second mole of romine with furfural is very slow under the same conditions. The effect of the ratio of the concentration of bromine to hat of aldehyde is larger in the reaction with methylfurfural han previously noted with furfural (*8*). As the amount of ethylfurfural used in the solutions is decreased there is vailable a greater excess of bromine, leading to an increased olar consumption of bromine for a given time period.

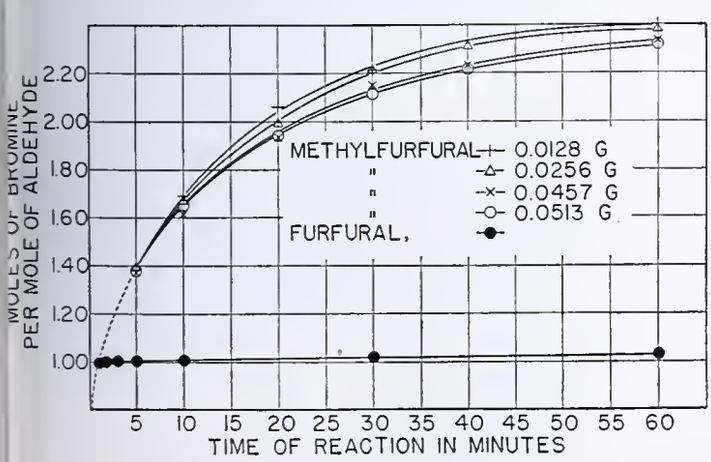

Figure 1. Reaction of Methylfurfural and Furfural with Bromine at 0° C. in Normal Hydrochloric Acid

Table I. Reaction of Methylfurfural with Bromine at 0° C. in Normal Hydrochloric Acid

Allowed for Reaction	Bromine Consumed[a] 0.05133 gram methylfurfural		0.04570 gram methylfurfural		0.02561 gram methylfurfural		0.01280 gram methylfurfural	
Min.	*Milliequivalents*	*Moles/mole of aldehyde*	*Milliequivalents*	*Moles/mole of aldehyde*	*Milliequivalents*	*Moles/mole of aldehyde*	*Milliequivalents*	*Moles/mole of aldehyde*
5	1.288	1.38	1.141	1.37	0.649	1.39	...	..
10	1.538	1.65	1.340	1.61	0.778	1.67	0.394	1.69
20	1.813	1.94	1.601	1.93	0.924	1.99	0.480	2.06
30	1.975	2.11	1.788	2.15	1.029	2.21	0.514	2.21
40	2.065	2.21	1.852	2.23	1.074	2.31	...	..
60	2.154	2.31	1.937	2.33	1.108	2.38	0.559	2.40

[a] At the start of the reaction there were 2.486 milliequivalents of bromine present. The moles of bromine consumed per mole of methylfurfural are equal to

$$\frac{\text{(milliequivalents of bromine consumed)} \times (0.05505)}{\text{weight of methylfurfural in grams}}$$

The results for 0.05133 and 0.02561 gram are averages of duplicate determinations agreeing within ±0.5%, while those for 0.04570 and 0.01280 gram are single experiments.

This effect may be taken into account by using the three variables, time, size of sample, and milliequivalents of bromine consumed, to express the results in a three-dimensional graph as illustrated in Figure 2. Acknowledgment is made to Baker Wingfield for valuable aid in devising and drafting this graph.

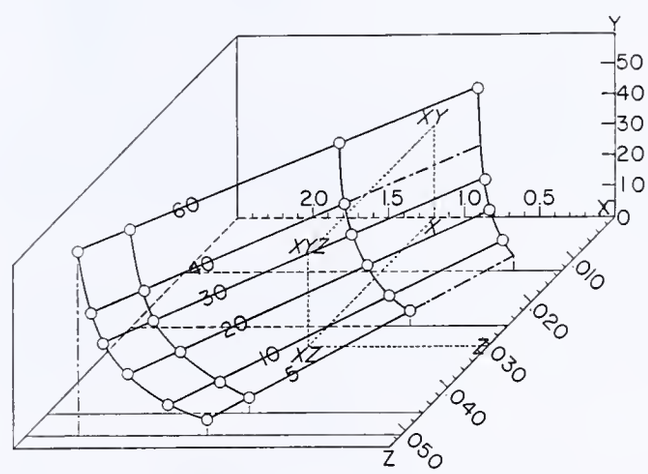

Figure 2. Reaction of Methylfurfural with Bromine at 0° C. in Normal Hydrochloric Acid

X. Milliequivalents of bromine consumed
Y. Minutes of reaction time
Z. Grams of methylfurfural

On the *X* axis there is plotted the number of milliequivalents of bromine consumed; on the *Y* axis, the time allowed for the reaction; and on the *Z* axis, the weight of methylfurfural in the sample. The curves extending upward into space represent as a function of time the 13-, 26-, 46-, and 51-mg. portions of methylfurfural as they react with bromine under the specified conditions. Although the slopes of the curves are not quite the same, owing to the effect of the concentration of bromine and aldehyde, the points for a given period of time lie on a straight line. Lines have been drawn through these points and designated "time lines."

An illustration of the method of analyzing an unknown is shown in Figure 2. Suppose 1.200 milliequivalents of bromine are consumed by an unknown amount of methylfurfural during a 30-minute period of reaction. As indicated by the small dotted lines, the value for *X* is then 1.200 and *Y* is 30, which gives the point *XY*. In order to find *Z*, a line is now projected from *XY* parallel to the *Z* axis to the 30-minute "time line" on the curved surface; this is the point *XYZ*. The number of milligrams of methylfurfural, *Z*, may then be found by dropping down the distance *Y* from *XYZ*, obtaining *XZ*, and finally projecting across to the *Z* axis for the point *Z*.

Since it is difficult to use the chart on a small scale, values which have been interpolated graphically between the experimental points are given in Table II.

Determination of Methylfurfural and Furfural in Mixtures

Because of the difference in the rates of reaction of the two aldehydes with bromine (Figure 1), it is possible to calculate the amount of each aldehyde present from the results of titrations made on aliquot portions which have been allowed to react for two periods of time.

Table II. Methylfurfural Corresponding to Bromine Consumed at Different Periods of Time

Bromine Consumed	Methylfurfural Found: At 5 min.	At 10 min.	At 30 min.
Milliequivalents	*Gram*	*Gram*	*Gram*
0.4	0.0156	0.0127	....
0.5	0.0196	0.0162	0.0112
0.6	0.0236	0.0197	0.0139
0.7	0.0276	0.0232	0.0167
0.8	0.0316	0.0266	0.0195
0.9	0.0357	0.0300	0.0222
1.0	0.0398	0.0333	0.0249
1.1	0.0438	0.0367	0.0276
1.2	0.0478	0.0401	0.0304
1.3	0.0518	0.0435	0.0331
1.4	....	0.0468	0.0358
1.5	....	0.0502	0.0385
1.6	....	0.0536	0.0413
1.7	....	....	0.0440
1.8	....	....	0.0468
1.9	....	....	0.0495
2.0	....	....	0.0522

The following equations express the consumption of bromine at two periods of time, based upon the molar consumption of bromine for each aldehyde.

Let f = grams of furfural
m = grams of methylfurfural
x_1 and x_2 = milliequivalents of bromine consumed by aliquots at times t_1 and t_2
a_1 and a_2 = molar consumption of bromine by furfural at t_1 and t_2
b_1 and b_2 = molar consumption of bromine by methylfurfural at t_1 and t_2

$$\text{At } t_1,\ x_1 = \frac{f}{0.048}(a_1) + \frac{m}{0.055}(b_1) \qquad (1)$$

$$\text{At } t_2,\ x_2 = \frac{f}{0.048}(a_2) + \frac{m}{0.055}(b_2) \qquad (2)$$

Solving these equations for m and f gives

$$m = (0.055)\frac{a_1x_2 - a_2x_1}{a_1b_2 - a_2b_1} \qquad (3)$$

$$= (0.048)\frac{b_2x_1 - b_1x_2}{a_1b_2 - a_2b_1} \qquad (4)$$

Table III gives the results of titrations made on a numbe of mixtures. Assuming that the furfural reacted independ ently of the methylfurfural in the mixtures, the amount o bromine which the furfural would consume was subtracte from the amount which the mixture consumed by experi ment, and thus the molar consumption of bromine by th methylfurfural in the mixture was calculated. An averag of the values for each period of time was taken, giving 1.3 for 5 minutes, 1.63 for 10 minutes, and 2.10 for 30 minute These values are not appreciably different from those given i Table I, and are used in these equations as the factor b. I might appear from the data in Table I that it would be ad vantageous to apply a variable factor dependent upon th amount of bromine in excess, as has been done in the case o methylfurfural alone (Figure 2 and Table II). However, i the experiments with the mixtures, the variation in the ex cess of bromine was much less than that for the pure methyl furfural samples; also, the equations used for calculating th mixtures are based upon differences which in some cases ar very small, and the above factors simplify the use of th equations and give satisfactory results.

It is obvious from Figure 1 that when short periods o time, 5 and 10 minutes, are used for the reactions, the facto a for furfural is 1.00. At 30 minutes a is 1.02, owing to in creased bromine consumption (*8*). Specifically, for the 5 and 10-minute reaction periods, Equations 3 and 4 becom

$$m = (0.055)\frac{(1.00)(x_2) - (1.00)(x_1)}{(1.00)(1.63) - (1.00)(1.38)}$$

$$f = (0.048)\frac{(1.63)(x_1) - (1.38)(x_2)}{(1.00)(1.63) - (1.00)(1.38)}$$

The data in Table III show the varying proportions of fur fural and methylfurfural, the number of milliequivalents c bromine consumed by aliquot portions of the mixtures at tw different periods of time, and the calculated amounts of th two aldehydes, using Equations 3 and 4 as one would for un knowns. The figures given are the results of single exper ments. The higher percentages of methylfurfural in some o the mixtures are rarely encountered in the usua pentosan determinations, but were used to sho the application of the method. The lowest weigh of methylfurfural used is 3 mg. Below this th error in the titration becomes significant, al though it is possible to obtain measurable dif ferences for amounts as low as 1 mg. The av erage error in these experiments is about 0.5 mg covering a range of 3 to 25 mg. of methylfurfura in the mixtures.

Table III. Analyses of Mixtures of Furfural and Methylfurfural by Reaction with Bromine at 0° C. in Normal Hydrochloric Acid

Experimental Data: Time of reaction, t_1 and t_2	Bromine consumed, x_1 and x_2	m^a and f Present in Mixture	m^a and f Determined in Mixture[b]	m Present in Mixture	m Determined in Mixture
Min.	*Milli-equivalents*	*Gram*	*Gram*	%	%
5	1.230	m = 0.0259	m = 0.0255	48.0	47.4
10	1.346	f = 0.0281	f = 0.0283		
		0.0540	0.0538		
5	0.873	m = 0.0115	m = 0.0125	29.0	31.8
10	0.930	f = 0.0281	f = 0.0268		
		0.0396	0.0393		
10	1.626	m = 0.0147	m = 0.0153	20.4	21.4
30	1.780	f = 0.0573	f = 0.0563		
		0.0720	0.0716		
5	1.489	m = 0.0130	m = 0.0123	18.8	17.9
10	1.545	f = 0.0560	f = 0.0566		
		0.0690	0.0689		
10	1.373	m = 0.0060	m = 0.0055	9.5	8.6
30	1.444	f = 0.0573	f = 0.0581		
		0.0633	0.0636		
10	1.285	m = 0.0030	m = 0.0028	5.0	4.6
30	1.333	f = 0.0573	f = 0.0577		
		0.0603	0.0605		
10	1.642	m = 0.0030	m = 0.0025	3.9	3.2
30	1.695	f = 0.0744	f = 0.0752		
		0.0774	0.0777		

[a] m = methylfurfural, f = furfural.
[b] By Equations 3 and 4.

Conclusions

The rate of reaction of methylfurfural wit bromine liberated from 0.1 N potassium bromate bromide in 1 N hydrochloric acid at 0° C. ha been studied. Using the values for molar con sumption of bromine per mole of methylfurfura at definite periods of time, it is possible to deter mine the amount of methylfurfural in solution b allowing the reaction to proceed under the give conditions for known periods of time.

Since methylfurfural reacts more rapidly wit bromine than does furfural under the same con ditions, the method has also been applied t mixtures of the two aldehydes. The amount

f individual aldehydes are calculated from the results of itrations of aliquot portions at two different periods of time, sing equations which express the molar consumption of romine by the mixture.

This volumetric method has been found simpler in application, and more reliable, than the gravimetric procedure. The mean error in the calculated values is about 0.5 mg. in amples containing from 3 to 50 mg. of methylfurfural.

Literature Cited

(1) Assoc. Official Agr. Chem., Official and Tentative Methods, 344 (1935).
(2) Cunningham and Dorée, *Biochem. J.*, 8, 438 (1914).
(3) Dorée, Charles, "Methods of Cellulose Chemistry," London, Chapman and Hall, 1933.
(4) Dox and Plaisance, *J. Am. Chem. Soc.*, 38, 2156 (1916).
(5) Ellet and Tollens, *Ber.*, 38, 492 (1905).
(6) Fromherz, *Z. physiol. Chem.*, 50, 209, 241 (1906).
(7) Gierisch, *Cellulosechem.*, 6, 61, 81 (1925).
(8) Hughes and Acree, Ind. Eng. Chem., Anal. Ed., 6, 123 (1934).
(9) *Ibid.*, 6, 292 (1934).
(10) Iddles and French, *Ibid.*, 8, 283 (1936).
(11) Krober, Rimbach, and Tollens, *Z. angew. Chem.*, 15, 477 (1902).
(12) Kullgren and Tyden, *Ing. Vetenskaps Akad. Handl.*, 94, 3 (1929).
(13) Pervier and Gortner, Ind. Eng. Chem., 15, 1167, 1255 (1923).
(14) Powell and Whittaker, *J. Soc. Chem. Ind.*, 43, 35 (1924).
(15) Purgotti, *Gazz. chim. ital.*, 24, 564 (1894).
(16) Rinkes, Organic Syntheses, Vol. XIV, p. 62, New York, John Wiley & Sons, 1934.
(17) Schorger, A. W., "Chemistry of Cellulose and Wood," New York, McGraw-Hill Book Co., 1926.
(18) Simon, *Biochem. Z.*, 247, 171 (1934).
(19) Votocek, *Ber.*, 30, 1195 (1897).

Received April 5, 1937. Presented before the Division of Cellulose Chemistry at the 93rd Meeting of the American Chemical Society, Chapel Hill, N. C., April 12 to 15, 1937. Publication approved by the Director of the National Bureau of Standards, U. S. Department of Commerce.

Small Chemical Changes in an Insulating Oil Associated with Oxidation

R. N. EVANS and J. E. DAVENPORT
Research Bureau, Brooklyn Edison Co., Inc., Brooklyn, N. Y.

Analytical procedures are given for the determination of strong acid, soluble copper or lead, and saponifiable material in insulating oil. The modification of the procedures consists chiefly in refinement of measurement with especial emphasis on the detection of small changes in composition of the oil. A type of oil oxidation inhibition is illustrated in which a strong acid is the only measurable product of the reaction.

THE initial chemical changes associated with the oxidation of an insulating oil can be revealed only by analytical procedures which aim towards greater refinement in experimental technic. The formation of strong acid in the first stage of the deterioration is not normally associated with oxidation; nevertheless, by means of improved apparatus for the determination of acidity in oil (*1*) it is possible to illustrate this point definitely. The behavior of the oil deterioration products in the presence of copper and paper is discussed under conditions which simulate those of the high-voltage oil-filled cable in operation. The oil is a commonly used insulating oil with a viscosity of 100 seconds (Saybolt) at 37.78° C. (100° F.).

The term "strong acid" designates a type of acid which exhibits a comparatively high hydrogen-ion activity for a given concentration of acid in *n*-butanol—for example, such acids as hydrochloric, picric, or sulfuric. Strong acids may be distinguished from weak acids in that when both are present in the nonaqueous titration medium, two points of inflection are obtained in the potentiometric titration curve. Additional proof of the strength of an acid may be obtained by titration with the potassium salt of a weak acid. Thus, potassium stearate will react with a strong acid as readily as does potassium hydroxide but cannot react with a weak acid. In this manner, it is possible to neutralize a strong acid without the concomitant formation of water of neutralization—a result which also may be accomplished by the use of sodium *n*-butylate. In Figure 1, *A* represents the titration of oil sample 8 (Table I), which had been exposed to ultraviolet radiation at room temperature and pressure. It is clear that the entire titration could have been carried out employing potassium hydroxide, in which event the strong-acid point of inflection would have indicated the same quantity of acid. Curve *B* represents the titration of the water extract of oil sample 8, the aqueous layer having been concentrated to a volume of 1 ml. by evaporation before the addition of 100 ml. of *n*-butanol

Table I. Changes in Chemical Properties of Oil

No.	Sample[a]	Oxygen	Period of Test	Neutralization Number, Electrometric Strong	Neutralization Number, Electrometric Weak	Saponification Number Electrometric[b]	Saponification Number Baader[c]	Soluble Copper, Dithizone Method
			Months					*P. p. m.*
	As received	.....	0	0	0.005	0.36	0.08	...
1	100 ml. oil	Excess	8.5	0.002	0.006	..	0.13	...
2	100 ml. oil, 10 g. paper	Excess	8.5	0	0.007	..	0	...
3	100 ml. oil, 0.1 g. copper	Excess	8.5	0.009	0.047	..	0.28	7
4	100 ml. oil, 10 g. paper, 0.1 g. copper	1/5 atmosphere	9	0.007	0.063	..	0.09	2.5
5	100 ml. oil	Nil	17	0	0.005	0.38	..	...
6	100 ml. oil, 10 g. paper	Nil	19.5	0	0.021	0	..	...
7	100 ml. oil, 10 g. paper, 0.1 g. copper	Nil	19.5	0	0.030	0.07	..	4.5
			Hours					
8	100 ml. oil, ultraviolet radiation	1/5 atmosphere	30	0.005	...	..	..	...
9	25 ml. oil, ultraviolet radiation	Nil	30	0	...	..	..	...
10	25 ml. oil, 0.1 g. copper, ultraviolet radiation	Nil	30	0	...	..	..	...

[a] Samples 1–7, inclusive, aged at 60° ± 0.05° C.; 8–10, inclusive, at room temperature. Peroxide No. of all aged samples was approximately zero. Peroxide No. of oil as received was 5.
[b] Hydrolysis in a mixture of 20 per cent water, 40 per cent ethanol, and 40 per cent benzene.
[c] Hydrolysis in a mixture of 40 per cent benzene and 60 per cent methanol, using alkali blue as the titration indicator.

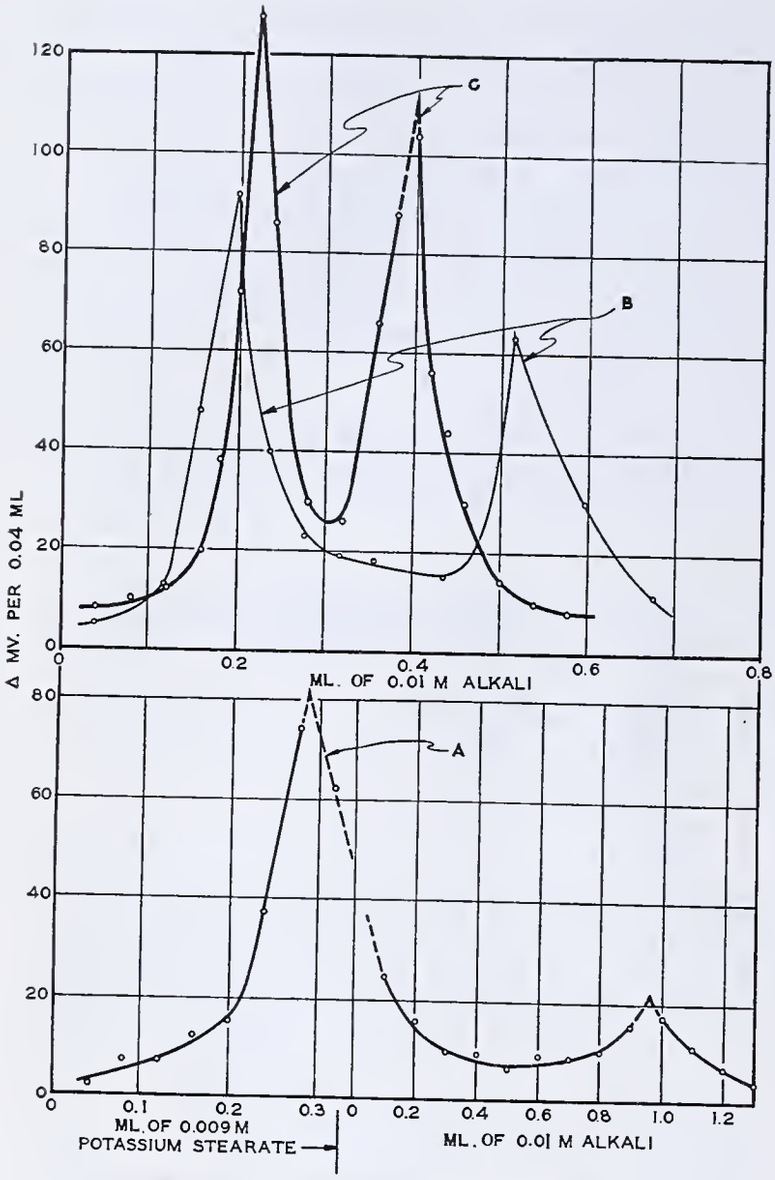

FIGURE 1. TITRATION OF OIL ACIDITY

A. Acidity determination on 10 grams of oil 8 (Table I)
B. Acidity determination of water extract of oil 8
C. Titration of 1 ml. of 0.0025 *N* sulfuric acid

as the titration medium. Curve *C* is the titration of 1 ml. of 0.0025 *N* sulfuric acid plus an equivalent amount of weak acid.

The chemical behavior of a cable oil may not be considered without some attention to the effect of the presence of paper and copper on oil deterioration. The soluble metal content of the oil—approximately 1 p.p.m. in practice—exerts a marked influence on the rate of chemical change. The use of diphenylthiocarbazone as a test reagent for copper (and lead) in aqueous solutions was reported by Fischer and Leopoldi (*2*). Later—indeed as the authors' work was in progress—Wichmann et al. (*3*) published their work on the colorimetric lead determination by means of dithizone. Since the test procedure has been thoroughly presented by previous investigators, only a discussion of the transfer of the soluble metal from oil to water will be included.

Ten grams of oil were diluted with 50 ml. of a mixture of 10 per cent by volume of pyridine in benzene and the solution was centrifuged for 15 minutes. The solvent was then removed in a stream of nitrogen at an elevated temperature and 10 ml. of 10 per cent aqueous nitric acid were added to the oily residue. After refluxing for 15 minutes and cooling, the oil was removed by extraction with ether and the aqueous layer was evaporated repeatedly to dryness in the presence of sulfuric-nitric acid mixture. When the residue was taken up with a definite amount of heavy metal-free water, both copper and lead were determined as originally outlined by Fischer and Leopoldi.

In the course of the development of the method, it was shown synthetically that coarse particles of copper produced no measurable positive error due to solvent action of the pyridine and that the metals were completely removed by obtaining negative results when the oil sample was re-treated employing the procedure described above. Considerable experimental work was carried out endeavoring to differentiate between free copper and copper soap by a mild hydrolytic action of dilute alcoholic sulfuric acid, followed by the more strenuous aqueous nitric acid treatment for free copper. While the method showed some degree of success when working with known compounds, for the type of oil under consideration it was felt that because of the initial formation of strong acid, the presence of soap would not be expected. In a sample of an oil, 0.1 microgram of copper or lead can be detected. Duplicate analyses of samples containing 1 to 5 p.p.m. of soluble metal agree within 10 per cent of the reported value where the matching of colors is accomplished visually.

The state of chemical combination of the copper was further investigated by means of a potentiometric titration method in which strong acid in excess is added to the oil sample in dioxane, whereupon the following reaction takes place:

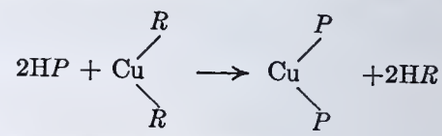

R = weak acid radical
P = strong acid radical

The increase in titer of the weak-acid point of inflection represents the weak acid liberated from the soap, whereas the difference in titer of the strong acid with and without the oil

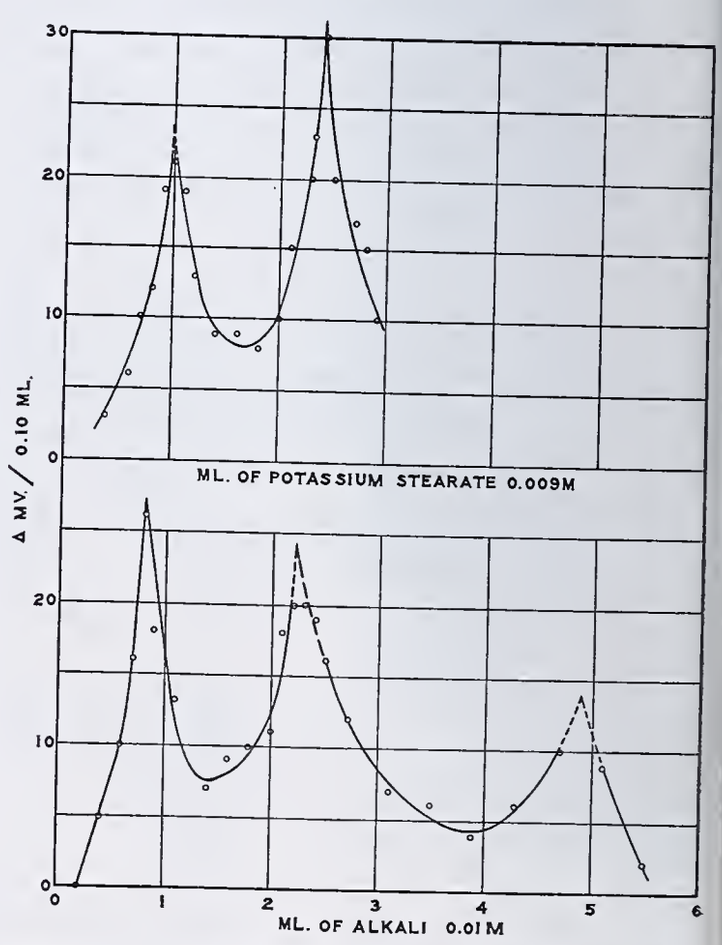

FIGURE 2. ACTION OF PICRIC ACID ON COPPER STEARATE IN DIOXANE

Lower, titration of 5 mg. of copper stearate plus excess picric acid
Blank, strong acid, 2.25 ml.; weak acid, 1.20 ml.
Upper, titration of 4.0 mg. of copper stearate plus excess picric acid
Blank, strong acid, 2.40 ml.

ample measures the amount used up in the above reaction.)riginally it was expected that the weak-acid titer increase vould serve as a measure of the soap content of the oil sample, ut it was later found, as previously reported (*1*), that many opper soaps are readily neutralized, yielding a point of inection as distinct as the corresponding acids. Consequently, o increase in weak-acid titer would be expected. A typical urve may be seen in Figure 2, in which the first point of inection corresponds to the excess picric acid, the second orresponds to the copper picrate, and the third is a measure f the liberated plus the free weak acid. Copper chloride, ulfate, and trichloroacetate behaved in a similar manner—hat is, a distinct point of inflection resulted when titrated, ue to the alcoholysis or hydrolysis of the salt. There was o difference in result when potassium stearate was substiuted for potassium hydroxide. If one assumes that the dispearance of strong acid is a result only of the reaction inicated in the previous equation, then the decrease in titer ay serve as a measure of the soap. Because of such a conroversial assumption and because for small amounts of copper 1 p.p.m.) the excess strong-acid point of inflection tends to erge with that of the copper salt, limiting the smallness of he amount which may be determined, it was considered unrofitable to continue this phase of the work. However, the ppearance of the copper salt point of inflection was believed bserved in several titrations of the oil samples aged in the resence of copper (Curve *C*, Figure 5, *1*).

In Table I the change in chemical properties of the oil is sted as a result of exposure to different experimental conditions.

In samples 1, 2, and 3 the three compartments containing oil, il plus paper, and oil plus copper were interconnected and thus ere subjected to the same oxygen pressure. No attempt was ade to ascertain the initial inhibitory period of the oil oxidation eaction, since in the present study it was desired to show that xygen was a necessary requisite for strong-acid formation. ample 4 was protected from atmospheric contamination by eans of an ascarite and dehydrite tube. In samples 5, 6, and , the oil was evacuated for a period of 10 days; the last 3 days roduced no change in the residual gas pressure (0.1 micron as easured with a MacLeod gage). After sealing off from the acuum pump, inversion of the flask permitted the oil to run own onto the paper or the copper. Samples 8 and 9 were preared like samples 4 and 5, respectively, and exposed to ultraiolet radiation through Pyrex glass. Here again yield per unit me was considered unimportant except as it had a bearing on he relative formation of strong acid. In sample 10 the oil was vacuated in contact with the copper particles.

The apparatus for saponification experiments is shown in igure 3. It was designed to permit saponification in an tmosphere of nitrogen and transference to the titration eaker without absorption of carbon dioxide from the air.

Conclusions

The chief conclusions which may be drawn from the mited data in Table I are: (1) Oxygen must be present to ring about strong-acid formation. (2) Either the strong cid has been absorbed by the paper or its tendency to form as been decreased by substances removed by the oil from the aper. In an attempt to decide whether the alkalinity of e paper or the specific absorption action of the paper was esponsible for the decrease in strong-acid formation, experiients with acid-treated paper were inconclusive. Thus, the ere contact of oil and paper, after the strong acid had been rmed in the oil, caused a disappearance of strong acid, but cid-treated paper was only slightly less active in this respect an paper which had not been washed with acid. (3) Copper as instrumental in increasing the strong-acid formation, the ata in Table I representing the free acid. (4) In the absence f copper, the paper completely removed the saponifiable aterial from the oxidized oil.

Consideration of the chemical and physical properties of

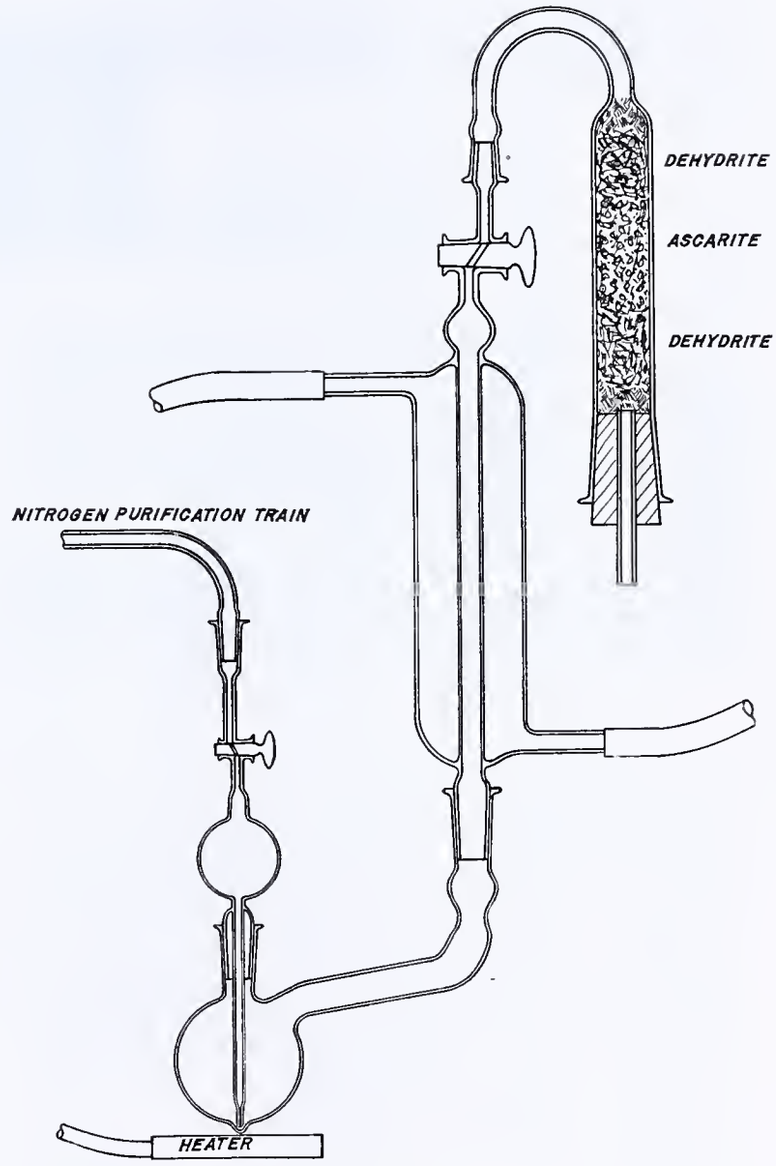

FIGURE 3. APPARATUS FOR DETERMINATION OF SAPONIFICATION NUMBER OF OILS

the strong acid suggested its similarity to sulfuric acid. Extraction of oil sample 8 (Table I) with water and partial evaporation of the water layer, followed by addition of acidified barium chloride, produced a precipitate which was similar in appearance to the precipitate formed when an equal volume of sulfuric acid of the same concentration was treated in like manner. It was concluded that the oil contained a sulfur complex which in its role as an oxidation inhibitor forms a strong acid. The presence of the strong acid precludes the formation of copper soaps and compounds of a peroxide nature. Furthermore, it would appear that the application of a theoretical oxidation mechanism to oil would be, in practice, greatly complicated by side reactions.

Acknowledgment

The authors wish to express their appreciation for the assistance of members of the bureau, in particular to W. F. Davidson under whose direction this work was carried out.

Literature Cited

(1) Evans, R. N., and Davenport, J. E., IND. ENG. CHEM., Anal. Ed., 8, 287–91 (1936).
(2) Fischer, H., and Leopoldi, G., *Wiss. Veröffent. Siemens-Konzern*, 12, 44–60 (1933).
(3) Wichmann, H. J., and others, *J. Assoc. Official Agr. Chem.*, 17, 108–35 (1934).

RECEIVED April 29, 1937. Presented in part at the fall meeting of the National Research Council Committee on Electrical Insulation, Cambridge, Mass., 1936.

A New Photoelectric Method for Measuring Vitamin A

RONALD L. McFARLAN, J. WALLACE REDDIE, AND EDWARD C. MERRILL
Department of Research and Technology, United Drug Company, Boston, Mass.

THE existence of a relation between the vitamin A potencies of fish-liver oils and their ultraviolet absorption spectrum has been known for some time (*1, 2, 3*). Comparisons of physical tests and biological activity of these oils have led to the establishment of a relationship between the 3280 Å. absorption band and vitamin A content. On the basis of this relationship, various physical instruments have been developed for measuring vitamin A concentrations. All these instruments measure quantitatively the absorption of light in the 3280 Å. region by oils containing vitamin A. This paper describes a new instrument for measuring quantitatively the absorption of light in the 3280 Å. region by means of photoelectric cells.

Description of the Instrument

The principles underlying this instrument can best be understood by reference to Figure 1.

CHOICE OF LIGHT SOURCE. Monochromatic radiation of approximately 3280 Å. wave length may be obtained in one of two ways: Light from a source emitting radiation of high intensity in the 3280 Å. region can be passed through a suitable filter, or this region may be segregated by means of a prism-slit system. In designing the present instrument the filter method of producing monochromatic radiation seems preferable, since it permits the use of light beams having a large cross-section area. Much larger photoelectric currents are thus made available for measurement.

Heretofore, vitamin A measuring instruments in which filters are employed to obtain a monochromatic beam of radiation have used the copper arc as a light source. The spectrum emitted by the copper arc is shown in Figure 2. (These spectra were taken by G. R. Harrison of the Massachusetts Institute of Technology.)

Two very intense lines occur, one at 3274 Å. and the othe at 3247 Å. Both lines fall near the peak of the vitamin absorption curve (*1*) shown in Figure 3. Consequently thei absorption by oils containing vitamin A should give a measur of the vitamin A present. But, as is evident from Figures and 3, the copper spectrum contains many wave lengths c appreciable intensity, which do not lie near the peak of th vitamin A absorption curve, and so are not absorbed in prc portion to the vitamin A content of oils through which the may pass. In order to eliminate this extraneous radiation a much as possible, various types of filters have been tried.

One type consists of a half-silvered quartz plate combined wit a thin plate of Woods glass. The copper arc radiation tran mitted through this filter is shown in Figure 2 in the spectru marked Cu-silver filter. This spectrum shows considerable radi tion intensity not lying in the 3280 Å. region.

The other filter is the Corning No. 597 Red Purple Ultr Unfortunately, the authors do not have a spectrum of the coppe arc taken through this filter, but it is possible to check its eff ciency by examining the spectrum marked Cu-Corex filter. Th spectrum, which was taken through a 5-mm. thickness of Cornin Red Purple Corex, No. 986, shows a large amount of radiatio intensity lying outside the vitamin A absorption curve. Th transmission curves published by the Corning Glass Compan show that the No. 597 filter transmits radiation farther into th visible region than does the No. 986. Consequently, even mo radiation lying outside the 3280 Å. region will be transmitted b the No. 597 filter than is shown in the spectrum of the No. 98 filter. It would thus appear that neither of these light source filter combinations provides a good monochromatic beam of radi tion for vitamin A absorption measurements.

In addition, the well-known difficulties of maintaining a stead copper arc of constant intensity help to make this arc an unsati factory source. However, it is possible to eliminate all these di ficulties by substituting a sodium arc for the copper arc. Th spectrum obtained when radiation from the sodium arc is filtere through a 5-mm. thickness of Corning Red Purple Corex No. 98 is shown in Figure 1 in the spectru marked Na-Corex filter. The resultin radiation is perfectly monochromati and has a wave length of 3303 Å., whic is only 23 Å. removed from the vitami A absorption peak, as compared with and 33 Å. for the principal lines of th copper arc. The sodium arc has th further advantage of being glass-en closed, and is thus free from the vari tions of the copper arc.

OPTICAL SYSTEM. Radiation from th sodium arc passes through a fuse quartz collimating lens, and is then d vided into two beams by two fuse quartz total reflecting prisms. The i tensity of each of these beams is co trolled by a variable-area slit. One these slits is connected to a logarithm scale by a mechanism such that log A_0/A may be read directly. A_0 and represent the full open and variable sl areas, respectively. The light bea controlled by this slit also passes throug an absorption cell containing the dilute oil under examination. The two variabl area slits have the same maximu aperture. Both light beams pass throug a Corning Red Purple Corex No. 98 filter before reaching the phototube The absorption cells are covered wit fused-quartz windows, and the cells a

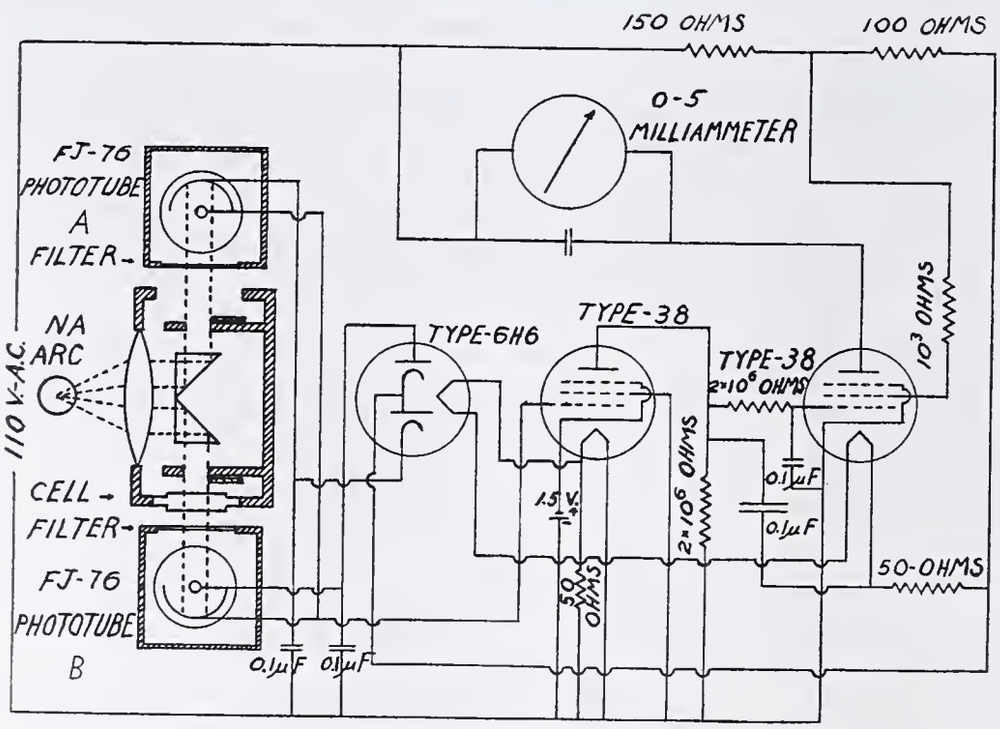

FIGURE 1. DIAGRAM OF INSTRUMENT

FIGURE 2

constructed that the thickness of the enclosed liquid sample is xactly 1 cm. Although all optical parts in the present instru- ent are made of fused quartz, some of the ultraviolet glasses ould be substituted without loss of light intensity.

CHOICE OF PHOTOTUBES. The choice of the proper phototubes governed by two considerations: It is desirable to obtain the aximum possible response to radiation in the 3280 Å. region, nd there must be no response to any other radiation which may ncceed in getting through the filter system. In Figure 2, the pectrum marked Na-Corex filter shows all the radiation to be oncentrated in the 3303 Å. line. However, only radiation of ave length less than 7000 Å. appears in this spectrum, while bove 7000 Å. the Corning Red Purple Corex No. 986 filter again egins to transmit appreciable radiation. Since any hot body, cluding the sodium arc, will emit appreciable black body radia- on above 7000 Å., it is essential that there be no phototube re- onse above this wave length. Several commercially available hototubes satisfy these requirements, and in the present instru- ent the FJ-76 tubes manufactured by the General Electric ompany are used.

AMPLIFIER CIRCUIT. The currents produced in the two FJ- 6 phototubes are amplified by means of the circuit shown in igure 1. (This circuit was designed by F. H. Shepard, Jr., of e Research and Development Laboratory, RCA Mfg. Company, nc. The authors wish to express their appreciation for his many ourtesies.) The 6H6 tube provides the direct current potentials r the phototubes. The currents from these phototubes are ucked against each other, and the resultant current is fed on to e grid of the first 38 tube. Successive amplifications by the vo 38 tubes permit easy reading of the resultant phototube cur- ent on the meter.

Method of Operation

An absorption cell containing a vitamin A oil dissolved in cyclo- exane is inserted in the path of the light beam impinging on hototube B (Figure 1). The calibrated variable-area slit con- olling this light beam is opened wide. The other variable-area it, which controls the light intensity falling on phototube A, then adjusted to give zero resultant phototube current. The bsorption cell is next removed from the instrument, and the alibrated variable-area slit is adjusted until zero resultant photo- ube current is again obtained. The calibrated scale reading orresponding to this balance point indicates the amount of light bsorbed. The same procedure is followed for a cell filled with e pure solvent, and the difference between the two observed ab- orptions gives the actual absorption by the vitamin A oil.

This method of operation eliminates any necessity for atched phototubes, since the use of two variable-area slits utomatically compensates for any inequality in current re- ponse of the phototubes. Furthermore, this method of peration effectively recalibrates the instrument for each eading. Errors arising from changes in light intensity are utomatically eliminated by the use of two phototubes. However, if the ambient temperature of the phototubes is ermitted to drop too far below room temperature, say 10° o 20° C., the current response from the phototubes is small, nd the instrument becomes sluggish and inaccurate. But if he phototubes are operated at ordinary room temperature, ay 18° to 30° C., the above method of operation gives repro- ucible results.

CALIBRATION. In Figure 4 is shown the experimental relation etween concentration and $\log_{10} \frac{I_0}{I}$ as read on the instrument. The curve is that of U. S. P. reference cod liver oil. Each point on this curve represents an individual reading, and not an average. Between the $\log_{10} \frac{I_0}{I}$ range of 0.1 to 1.0 the curve is accurately a straight line. The data shown in this graph have not been corrected for the absorption of the cell and solvent. An analysis of the absorption factors leads to the relation

$$\log_{10} \frac{I_0}{I} = 0.049 + E^{p\%}_{1\text{ cm.}}$$

where $E^{p\%}_{1\text{ cm.}}$ is the extinction coefficient for a p per cent solution. A value of 1.32 is obtained for $E^{1\%}_{1\text{ cm.}}$ at 3303 Å. and—considering the reference oil to contain 3000 vitamin A units per gram—the conversion factor is 2270. As is evident from Figure 4, constant and accurate results are obtained over a large range of concentrations. This permits much greater flexibility in making dilutions, and consequently increases the rapidity with which tests can be made. The time required for a single reading on a diluted oil is about 1.5 minutes.

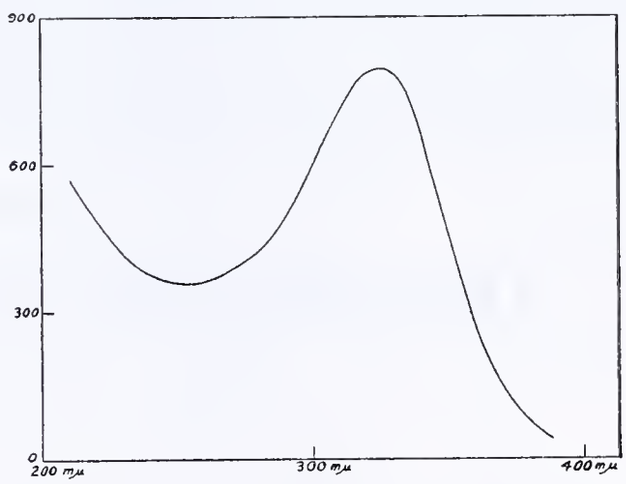

FIGURE 3. VITAMIN A ABSORPTION CURVE

In Table I are given various determinations as made on several oils by the present instrument, and also by a spectrophotometer. (The spectrophotometer readings were very kindly made by the Atlantic Coast Fisheries Corporation of New York.) The oils were received by the authors on July 31, 1936, and the tests were made with the new instrument on December 2, 1936. The values are expressed in vitamin A units. The spectrophotometer readings were made

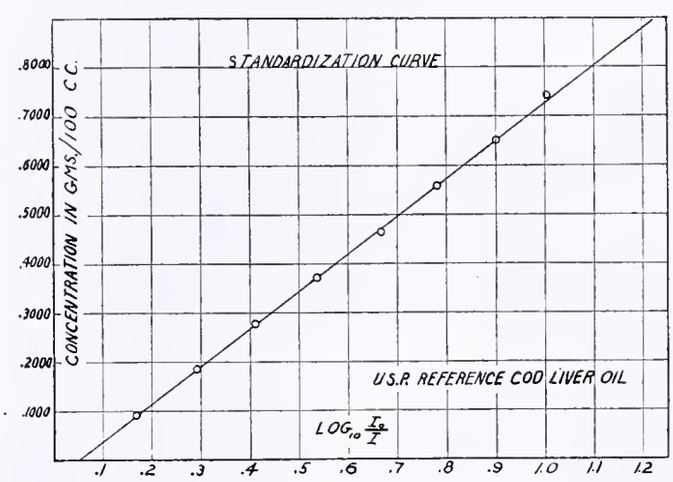

FIGURE 4

Table I. Determinations on Oils

Photoelectric Instrument	Spectrophotometer
25,590	25,450
32,230	32,100
78,890	74,040
102,200	98,010
177,800	176,760

Table II. Comparative Measurements

Solution I	Solution II
1.14	0.552
1.10	...
1.00	...
1.13	...

at 3280 Å. The agreement between these readings is well within the limits of experimental error.

Comparative absorption measurements have also been made by several laboratories on two potassium bichromate solutions. (For these measurements the authors are indebted to C. S. Leonard of the Health Products Corporation, A. W. Wells of the Atlantic Coast Fisheries Corporation, G. R. Harrison of the Massachusetts Institute of Technology, and Albert E. Sidwell, Jr., of the University of Chicago.) These measurements have all been made with a monochromatic beam as near to 3303 Å. wave length as possible, and on the same solution which was diluted in the authors' laboratory. The values which were obtained (for $\log_{10} I_0/I$) are shown in Table II, and compare very satisfactorily with the values 1 and 0.544, as read on the authors' instrument.

Conclusions

A new photoelectric instrument for measuring vitamin has been developed which incorporates the following featur

1. A monochromatic beam of light of high intensity, lyi in the 3280 Å. region.
2. Accurate measurement of the vitamin A absorpti coefficient over the log I_0/I range of 0.1 to 1.0. With ca this range may be extended somewhat.
3. Rapid and easy measurements. The time required fo single measurement on a properly diluted oil is less than minutes.
4. An accuracy of 1 per cent in reading absorption coef cients, which may with care be pushed to less than 0.5 per cen
5. Reproducible results day after day.
6. Elimination of personal matching errors.

Literature Cited

(1) Coward, Dyer, Morton, and Gaddum, *Biochem. J.*, **25**, 11 (1931); **26**, 1593 (1932).
(2) Drummond and Morton, *Ibid.*, **25**, 785 (1929).
(3) Morton and Heilbron, *Nature*, **122**, 10 (1928); *Biochem. J.*, 2 987 (1928).

Received April 1, 1937. Presented before the Division of Biological Che istry at the 93rd Meeting of the American Chemical Society, Chapel Hi N. C., April 12 to 15, 1937.

Determination of Carbon and Hydrogen

In Gasoline and Other Volatile Liquids

HARRY LEVIN AND KARL UHRIG, The Texas Company, Beacon, N. Y.

An apparatus and procedure are described which enable one to determine the carbon and hydrogen content of gasoline or other volatile liquids by combustion.

A feature of the apparatus is a device by means of which the rate of volatilization can be controlled and combustions conducted to completion in an atmosphere of oxygen without explosion.

An apparatus and technic have been developed which make the determination of carbon and hydrogen by combustion, in volatile liquids such as gasoline, a much less unpleasant experience.

A number of devices have been described in the literature (*1*, *3–7*) for use in determining carbon and hydrogen in volatile products. Although some may be satisfactory for pure chemical substances, they are troublesome when applied to gasoline, which consists of a series of hydrocarbons of varying boiling points, boiling frequently over a range of 300° F.

Losses of volatile hydrocarbons were generally experienced in devices into which gasoline was weighed by difference, as well as in all which had to be opened outside the combustion tube. Incomplete combustion of heavy or oxidized gasoline residues frequently resulted from vaporization outside the combustion tube. Control of volatilization rate w rarely possible with those devices which suddenly expos the entire volatile sample to temperatures above its initi boiling point—for example, breaking a weighing bulb l means of plunger rods. Explosions were common wi devices which required that oxygen be passed through over the entire gasoline sample. The procedure recent described by Bruun and Faulconer (*2*) has not been tested l the authors.

The apparatus which the authors have developed has tl following advantages: (1) It permits weighing of samp in a sealed glass bulb; (2) the bulb is not opened until it within the combustion tube and the latter is assembled f test; (3) vaporization of the contents of the weighing bu is at all times under control; (4) vaporization residues a left in the weighing bulb and can be completely burned aft crushing the bulb within the combustion tube; and (combustion is carried out in an atmosphere of oxygen, e suring completeness, without explosion hazard. Thou hundreds of determinations have been made by this meth during the past 6 years, no explosions were experienced.

Apparatus

A multiple-unit type of electric combustion furnace havi three heating elements has been found satisfactory wh equipped with the usual accessories for combustion analys A special combustion tube and a bulb-crusher assembly a needed.

The special combustion tube consists of a long and a short section joined by a shorter capillary section, as illustrated in Figure 1. The capillary section is of heavy-walled 3-mm. inside diameter tubing. This tube, made of Pyrex glass, has been furnished on order by the Emil Greiner Co., New York, N. Y.

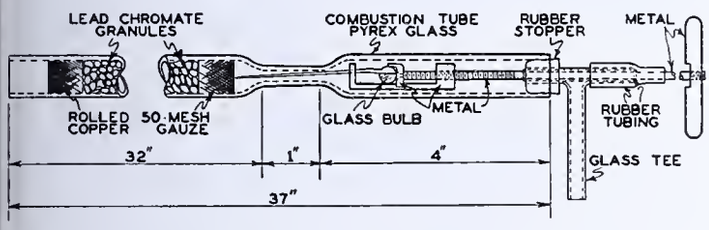

FIGURE 1. BULB-CRUSHER ASSEMBLY WITH SAMPLE IN PLACE
(Connected to prepared combustion tube.)

The metal parts of the bulb-crusher assembly were made of Monel metal in the authors' machine shop, in accordance with Figure 2, which is drawn to scale. It is seen assembled and in position in the combustion tube in Figure 1.

COMBUSTION TUBE. The combustion tube is filled by inserting a roll of copper gauze about 5 cm. (2 inches) long and of such diameter as to fit tightly within the tube. This is forced down as far as it will go and should be within 2.5 cm. (1 inch) of the capillary portion of the tube. Kahlbaum's lead chromate is then poured in to a depth of within 12.5 cm. (5 inches) of the other end of the tube. (The lead chromate was chosen because it retains sulfur and prevents the passage of sulfur dioxide into the carbon dioxide absorber; many incompletely refined gasolines contain appreciable amounts of sulfur.) This is followed by another roll of copper gauze about 8.75 cm. (3.5 inches) long and of similar diameter to the first. Before using this tube for an actual determination it should be burned out by placing it in the combustion furnace, bringing the tube to a dull red heat, and slowly passing 20 liters (5 gallons) of oxygen through it while being so heated.

The combustion tube should not be placed directly upon the metal trough which usually comes with the electric furnace; the tube frequently becomes hot enough to fuse and adhere to the metal, and then upon cooling, the combustion tube may be fractured because of the difference of expansion. To avoid such destruction, a strip of asbestos tape 1.9 cm. (0.75 inch) wide and as long as the tube itself is interposed.

PURIFYING TRAIN. The usual purifying train for the removal of carbon dioxide and moisture from the oxygen and air used in this test is preceded by a Fisher bubble counter of the same size as that used after the absorbers. This bubble counter should contain a small amount of concentrated sulfuric acid, through which the gases pass before entering the purifying train.

BULB-CRUSHER ASSEMBLY. This is prepared as shown in Figures 1 and 2. Before actual use those metal portions of the bulb crusher, which in the final assembly will be within the combustion tube, should be heated in a flame to ensure removal of combustible impurities from its surface.

The bulb-crusher assembly (minus the weighing bulb) consists of (1) the bulb crusher; (2) glass T 0.6-cm. (0.25-inch) outside diameter, one arm of which is 1.9 cm. (0.75 inch) long and the other arm 3.1 cm. (1.25 inches) long. The vertical portion of the T is 5 cm. (2 inches) long; the longer arm carries the rubber stopper; (3) a one-hole rubber stopper that fits into the combustion tube; (4) two pieces of rubber tubing of diameter to make a gas-tight connection between the spindle of the bulb crusher and the glass T through which it passes; the smaller rubber tubing is placed over the spindle and within the T, the larger over the T and the small tubing.

ABSORPTION TRAIN. This consists of one Marchand drying tube filled with Anhydrone (anhydrous magnesium perchlorate; absorbs water) and another Marchand drying tube filled with Ascarite (sodium hydroxide asbestos; absorbs carbon dioxide).

Procedure

The combustion tube is brought to a dull red heat, the three heating units being together and as near the outlet end of the furnace as they can be placed. While the furnace is reaching the desired temperature the sample and absorbers are weighed. During all this time a slow stream of oxygen is kept flowing through the train of scrubbers and the combustion tube, with the bulb-crusher assembly (minus the bulb) in place; the purpose of this is to dry all parts thoroughly and to ensure the presence of oxygen within the tube.

The sample (60 to 100 mg.) is taken in a glass weighing bulb in the following manner:

The outside of the empty bulb is rinsed with ethyl ether, waved dry, placed in a desiccator to come to normal temperature conditions, and very carefully weighed. The bulb is then gently warmed, and the capillary end is promptly immersed in the sample to be tested, which for this purpose is kept in a small crucible. As the bulb cools, the sample is drawn into it, and experience soon teaches when the desired amount of sample has been obtained. The weighing bulb is then removed, held in an upright position, and a few drops of ether are poured on the outside of the bulb in order to chill it sufficiently to cause all the liquids within it to flow from the stem into the bulb proper. Holding the bulb in an upright position, the tip of the stem is sealed by fusing in a flame. The bulb is then again desiccated, and subsequently weighed. Throughout all these operations it is important to handle the bulb so that its contents do not flow into the stem. The bulb is now returned to the desiccator to remain there until introduced into the combustion tube.

The weighed Anhydrone and Ascarite absorbers are then connected in the usual manner to the outlet end of the combustion tube, and to the latter absorber is attached a Fisher bubble counter containing a small amount of concentrated sulfuric acid.

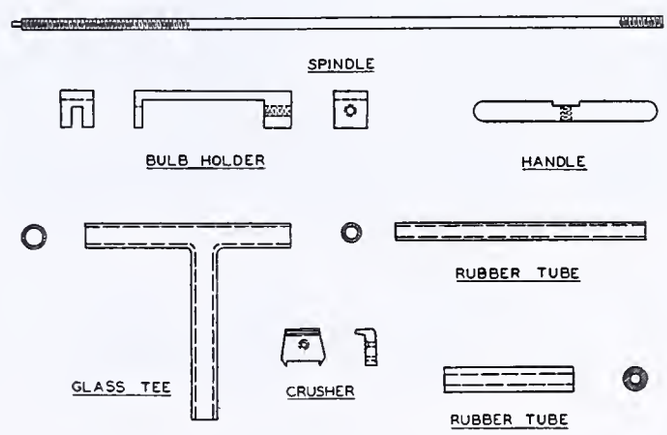

FIGURE 2. BULB-CRUSHER DETAILS

A plate of shatterproof glass 60 cm. (2 feet) square, supported in a suitable manner, is placed between the inlet end of the combustion tube and the operator, where it is kept, for safety, throughout the test. This precaution may appear unnecessary, since with their apparatus and method the authors have never had an explosion, but explosions with other devices recommended for combustion analysis of volatile liquids have been so unpleasant as in their opinion to justify this additional safety precaution.

The bulb-crusher assembly is withdrawn from the tube; in its jaws is immediately placed the bulb containing the sample, and the assembly is promptly returned to its original position. The spindle of the bulb crusher is so adjusted that, when this assembly is returned, the tip of the closed capillary of the bulb is almost in contact with the roll of copper gauze in the combustion tube. Figure 1 shows the bulb-crusher assembly with the sample in place, connected to the combustion tube.

The stream of oxygen is now regulated so that 40 to 60 bubbles per minute emanate from the bubble counter.

A small forward pressure applied by hand to the spindle of the bulb crusher serves to force the capillary stem of the bulb against the roll of copper gauze in the combustion tube, breaking the stem at its point of contact. The contents of

the bulb are now able to escape into the tube in vapor form, and are assisted in this volatilization by the very cautious and gentle application of heat from a Bunsen burner to the section of the combustion tube containing the bulb. This heating must be carried out with extreme caution so as to volatilize the sample slowly. A too rapid volatilization will result in incomplete combustion and erroneous results.

Table I. Results on Knowns and Unknowns

	Found		Theoretical	
	Carbon	Hydrogen	Carbon	Hydrogen
	%	%	%	%
Benzene	92.10	7.75	92.25	7.75
Ethyl ether	64.61	13.49	64.80	13.60
Gasoline 1				
Run 1	86.29	13.57	...	...
Run 2	86.22	13.57	...	...
Gasoline 2				
Run 1	86.23	13.41	...	...
Run 2	86.44	13.23	...	...
Gasoline 3				
Run 1	85.31	14.54	...	...
Run 2	85.45	14.48	...	...
Gasoline 4				
Run 1	85.49	14.64	...	...
Run 2	85.28	14.68	...	...
Gasoline 5				
Run 1	84.64	15.27	...	...
Run 2	84.43	15.37	...	...
Run 3	84.56	15.37	...	...
Run 4	84.61	15.22	...	...

When all visible liquid has left the bulb proper, the nearest heating unit of the furnace is gradually moved until it encircles the bulb, where it is left for about 5 minutes, while a stream of cold air through a fishtail is directed at the last inch of the combustion tube to avoid overheating the rubber stopper used at the inlet.

The heating unit is then returned to its former position and kept there until the bulb is cool enough to proceed with the next step, which is its crushing by means of the lever of the bulb crusher. The bulb is crushed by advancing th movable jaw of the bulb crusher by means of the spindl handle without opening the tube, after which the heatin unit is again moved to cover the bulb area and kept ther until the broken glass parts are absolutely clean—that i until all carbon has been burnt—when it is returned to it original position.

The stream of oxygen is now replaced by air, and whe 1500 cc. of air have passed through the apparatus, the com bustion products are usually removed and the absorptio train contains air, as at the commencement of the test. Th combustion usually requires about 2.5 hours. In sweepin out the combustion products, the air is passed through th tube about twice as fast as was the oxygen during the com bustion.

The absorption train is removed, properly stoppered, an allowed to cool and remain near the balance for 30 minutes The stoppers are then removed and the absorbers are weighe against a counterpoise in the usual manner. From the in crease in weight of the Anhydrone tube (water) the hydroge is calculated, and from the increase of the weight of the As carite tube (carbon dioxide) the carbon is computed.

Table I indicates the accuracy and reproducibility of thi method when applied to known and unknown volatile liquids

Literature Cited

(1) Avery S., and Hayman, D., Ind. Eng. Chem., Anal. Ed., 2, 33 (1930).
(2) Bruun, J. H., and Faulconer, W. B. M., *Ibid.*, 8, 315 (1936).
(3) Clarke, *J. Am. Chem. Soc.*, 34, 746 (1912).
(4) Meyer, Hans, "Lehrbuch der organisch-chemischen Methoden," 4th ed., pp. 191–230, (1922).
(5) Reid, *J. Am. Chem. Soc.*, 34, 1033 (1912).
(6) Sevag, M. G., Ind. Eng. Chem., Anal. Ed., 1, 16 (1929).
(7) Shoesmith, *J. Soc. Chem. Ind.*, 42, 57T (1923).

Received April 21, 1937.

A New Qualitative Test for Selenium. I.

H. A. LJUNG, Guilford College, Guilford College, N. C.

SINCE the advent of the use of selenium in steels, and since its poisoning effect on plants and animals through its presence in soils have become known, much work has been done on its qualitative detection and quantitative determination. Recently published papers give details for the determination of selenium in plants (*6*), in animal tissue, milk, and urine (*3*), and in steels (*2*, *5*). Knight (*4*) has recently spoken on the selenium problem with regard to agriculture in the midwest and west.

The present work on selenium was undertaken with a view to finding and developing a new method for quantitative determination, in which a stable reducing agent might be used. Common reducing agents, such as potassium iodide and sulfur dioxide, are objectionable because of their instability as standard solutions. The use of the thiocyanate ion as a reducing agent in other analytical reactions has suggested it as a possible reducing agent for selenious acid. The literature contains no reference to such application, however, and no theoretical data are available.

It has been found in this laboratory that the thiocyanate ion is capable of reducing the selenite ion in solutions made acid with hydrochloric acid. It was thought, since the alkali and ammonium thiocyanates are stable reagents and can be conveniently standardized, that this reaction might be used as a basis for the quantitative volumetric determination of selenium. In this work it was necessary to begin with a study of the concentration of reducing agent, the hydrogen-ion concentration, the time of completion of the reaction, the temperature at which the reaction takes place, the sensitivity of the reaction, and the interfering elements. Work is now in progress on the applications of the reaction.

Since hydrogen sulfide is evolved during the reaction and red metallic selenium is precipitated, the following equation may be written to represent the reaction between these two ions:

$$SeO_3^{--} + 2CNS^- + 6H^+ \rightarrow Se^0 + 2CN^- + 2S^{--} + 3H_2O$$

However, the volumetric relationships indicate that a whole molecular weight of thiocyanate is required by the selenite ion. Preliminary determinations of the equivalent weight of the thiocyanate ion indicate this to be true; hence another equation must be written to represent the exact quantitative relationship between the ions. This is now under investigation. Solutions were made up, however, in accordance with the above equation and experiments were carried out to determine the properties of the reaction before the above volumetric relationship was known.

The selenite and the thiocyanate ions react in solutions acid with sulfuric acid, forming a yellow-orange precipitate. The results obtained thus far seem to indicate that the reaction is slow to start, but takes place rather rapidly.

Reagents

A standard solution of selenious acid was prepared by weighing ut resublimed selenium dioxide, previously dried for 1 hour at 50° C., and dissolving in water to make a solution containing pproximately 1 mg. of selenium per cc. This solution was ubsequently standardized by reducing the selenious acid with ulfur dioxide in acid solution, filtering on a Gooch crucible, rying, and weighing. The results agreed satisfactorily with the eighed amount of selenium dioxide. This solution contained .0473 mg. of selenium per cc. (0.05289 *N*).

Table I. Effect of Varying Thiocyanate-Ion Concentration

No.	H_2SeO_3	NH_4CNS	HCl (12 *N*)	H_2O	Total Volume	Normality	Filtrate
	Cc.	*Cc.*	*Cc.*	*Cc.*	*Cc.*		
1	0.5	0.5	5.0	4.0	10.0	6	+
2	0.5	1.0	5.0	3.5	10.0	6	+
3	0.5	1.5	5.0	3.0	10.0	6	+
4	0.5	2.0	5.0	2.5	10.0	6	−
5	0.5	2.5	5.0	2.0	10.0	6	−
6	0.5	3.0	5.0	1.5	10.0	6	−
7	0.5	3.5	5.0	1.0	10.0	6	−
8	0.5	4.0	5.0	0.5	10.0	6	−
9	0.5	4.5	5.0	0.0	10.0	6	−
10	0.5	5.0	5.0	0.0	10.0	5.88	−

A solution of ammonium thiocyanate was prepared, approximately 0.025 *N*, in accordance with Equation 1, and was standardized against a standard solution of potassium iodate according o the method suggested by Andrews (*1*).

A solution of potassium iodate was prepared by weighing out ufficient pure salts, previously dried at 110° C. for 1 hour, to nake a solution approximately 0.1 *N*.

Ordinary concentrated c. p. hydrochloric acid was used, of 3 & A grade.

General Procedure

The sample of selenious acid was measured out, and water was dded, followed by the hydrochloric acid and the thiocyanate olution, calculating the volumes so that the total volume of he mixture would be 10.0 cc. The solution was then heated to oiling and boiled for 1 minute except where otherwise noted, nd the observations were made. All tests were carried out in 5-cm. (6-inch) test tubes.

Variation of Reducing Agent

Table I shows the effect of the variation of the thiocyanate-on concentration. The acid concentration was held at 6 *N* ecause the reduction of selenious acid with sulfur dioxide proceeds better in a high hydrogen-ion concentration. Upon completion of each test the solutions were filtered, if necessary, nd tested for complete precipitation, using sulfur dioxide. A qualitative color comparison test was used here, as the small mount of selenium remained suspended in solution for at east an hour. The color imparted to the solution depends pon the amount of selenium precipitated. The color of the recipitate varied from red to green to greenish yellow to almost white by reflected light. With large amounts of selenium, the color imparted to the solution is reddish blue by ransmitted light. Observations made by transmitted light re not as delicate as those made by reflected light. In each ase the solution gave a positive test with the thiocyanate ion. n the last column of Table I a plus or minus sign indicates the ype of test obtained.

Table I shows that the selenium is completely precipitated t the thiocyanate-ion concentration shown, which is twice hat indicated by Equation 1. The amounts of selenium obained in the filtrates using sulfur dioxide showed a decrease rom No. 1 through No. 3. The reaction proceeds much faster s the concentration of the thiocyanate ion increases. The selenium began to show up within 10 seconds after reaching he boiling point.

Variation of Acid Concentration

Table II shows the effect of the variation of the hydrogen-on concentration. In addition to the thiocyanate test, the solutions were tested with sulfur dioxide. In each case the solution gave a positive test with the thiocyanate ion.

Table II. Effect of Varying Hydrogen-Ion Concentration

No.	H_2SeO_3	NH_4CNS	HCl	H_2O	Total Volume	Normality	Filtrate
	Cc.	*Cc.*	*Cc.*	*Cc.*	*Cc.*		
1	0.5	2.0	2.0 (*N*)	5.5	10.0	0.2	+
2	0.5	2.0	4.0 (*N*)	3.5	10.0	0.4	+
3	0.5	2.0	6.0 (*N*)	1.5	10.0	0.6	+
4	0.5	2.0	2.0 (4*N*)	5.5	10.0	0.8	+
5	0.5	2.0	2.5 (4*N*)	5.0	10.0	1.0	+
6	0.5	2.0	5.0 (4*N*)	2.5	10.0	2.0	+
7	0.5	2.0	3.4 (12*N*)	4.1	10.0	4.08	+
8	0.5	2.0	5.0 (12*N*)	2.5	10.0	6.0	−
9	0.5	2.0	6.7 (12*N*)	0.8	10.0	8.04	−
10	0.5	2.0	7.5 (12*N*)	0.0	10.0	9.0	−

The reduction of the selenite ion is complete in 6 *N* acid solutions. The reaction proceeds more rapidly as the hydrogen-ion concentration increases, as shown by the time required for the appearance of the selenium precipitate; in the case of No. 10, the precipitate began to appear within 2 to 3 seconds after reaching the boiling point. Table II indicates that the thiocyanate ion requires a higher hydrogen-ion concentration to effect the reduction of the selenite ion than is commonly employed when sulfur dioxide is the reducing agent. The tests obtained in Nos. 1 to 5 were poor, but increasingly better in the same order.

Variation of Time

Table III shows the effect of the variation of time allowed for boiling after the solution had reached the boiling point. After boiling for the time indicated, the solutions were cooled immediately under the tap to room temperature, filtered, heated to boiling, and tested with sulfur dioxide if necessary.

Table III. Effect of Varying Boiling Time

No.	H_2SeO_3	NH_4CNS	HCl (12 *N*)	H_2O	Total Volume	Normality	Time	Filtrate
	Cc.	*Cc.*	*Cc.*	*Cc.*	*Cc.*		*Sec.*	
1	0.5	2.0	5.85	1.7	10.0	7	10	+
2	0.5	2.0	5.85	1.7	10.0	7	20	−
3	0.5	2.0	5.85	1.7	10.0	7	30	−

At this concentration the reduction is complete within 20 to 30 seconds. Filtrates 1 and 2 gave a faint coloration upon reboiling, fainter in No. 2; filtrate 3 showed no coloration. Filtrate 1 gave an exceedingly faint test with sulfur dioxide. As the heating period became longer, the precipitate became more compact and less finely divided.

Sensitivity

Table IV shows the effect of reducing the amount of selenium in each test solution.

As little as 1 part of selenium in 20,040,000 parts of solution can be detected by this reaction. The tests became increasingly faint, beginning to give a greenish color with No. 7 and fading off to almost white with Nos. 12, 13, and 14. Tests 13 and 14 showed up only after standing for 48 hours. An excess of thiocyanate was added to the tests in the latter part of the series, it being noted that the tests showed up very slowly. In the presence of an excess of thiocyanate the reduction proceeds much more rapidly. In the cases of Nos. 12, 13, and 14 the selenious acid solution and thiocyanate solutions were diluted so that readable volumes could be used. This dilution is not indicated, but the volumes are read in terms of the original solutions for this series, obtained by diluting the first solution of selenious acid to ten times its volume and diluting the first solution of thiocyanate to twice its volume.

TABLE IV. EFFECT OF REDUCING AMOUNT OF SELENIUM

No.	H_2SeO_3	NH_4CNS	HCl (12 *N*)	H_2O	Total Volume	Normality	Solution
	Cc.	*Cc.*	*Cc.*	*Cc.*	*Cc.*		
1	1.00	0.80	5.85	2.35	10.0	7	Good
2	0.80	0.65	5.85	2.70	10.0	7	Good
3	0.60	0.50	5.85	3.05	10.0	7	Good
4	0.40	0.35	5.85	3.40	10.0	7	Good
5	0.20	0.20	5.85	3.75	10.0	7	Good
6	0.10	0.10	5.85	3.95	10.0	7	Good
7	0.05	0.05	5.85	4.05	10.0	7	Faint
8	0.04	0.04	5.85	4.07	10.0	7	+
9	0.03	0.03	5.85	4.09	10.0	7	+
10	0.02	0.02	5.85	4.11	10.0	7	+
11	0.01	0.01 + 0.5	5.85	4.13	10.0 + 0.5	7	+
12	0.005	0.01 + 0.5	5.85	4.14	10.0 + 0.5	7	+
13	0.00375	0.01 + 0.5	5.85	4.14	10.0 + 0.5	7	+
14	0.0025	0.01 + 0.5	5.85	4.14	10.0 + 0.5	7	+

Temperature-Time Variation

In order to find the lowest temperature at which the reaction begins, a series of experiments was conducted by mixing the proportions of solutions indicated, placing them in a Thiele melting-point tube, heating slowly to the temperature indicated ±1° C., and holding at this temperature for the time indicated. The solution was then cooled to room temperature and filtered, and a portion of the filtrate was heated to boiling prior to testing for complete precipitation.

TABLE V. TEMPERATURE-TIME VARIATION

No.	H_2SeO_3	NH_4CNS	HCl (12 *N*)	H_2O	Total Volume	Normality	Temperature	Time	Filtrate
	Cc.	*Cc.*	*Cc.*	*Cc.*	*Cc.*		° *C.*	*Min.*	
1	2.5	10.0	29.35	8.5	50.0	7	40	30	No reaction
2	2.5	10.0	29.35	8.5	50.0	7	55	15	+
3	2.5	10.0	29.35	8.5	50.0	7	55	30	+ < No. 2
4	2.5	10.0	29.35	8.5	50.0	7	60	15	+ > No. 3
5	2.5	10.0	29.35	8.5	50.0	7	60	30	−
6	2.5	10.0	29.35	8.5	50.0	7	65	15	+ Faint
7	2.5	10.0	29.35	8.5	50.0	7	70	15	−

From Table V it is seen that the reaction is complete at this concentration within 30 minutes at a temperature of 60° C.; that with an increase in temperature the time required for completion becomes less; and that the reaction is complete within 15 minutes at 70° C. The reaction begins rapidly at 60° C.

A similar experiment showed that the reaction takes place at room temperature, but is not complete within 30 hours.

Interferences

In order to determine the interfering ions, experiments similar to those previously conducted were carried out in the presence of approximately 100 mg. of each ion shown in Table VI, in the cases of the noninterfering ions the precipitates were filtered off, dissolved in nitric acid, and tested for the metal. In no case was a positive test for the metal obtained.

TABLE VI. INTERFERENCES

Interfering Ions	Fe^{++}, Sb^{+++}, Sn^{++}
Noninterfering Ions	Fe^{+++}, Mn^{++}, Cr^{+++}, Al^{+++}, Zn^{++}, Ni^{++}, Co^{++}, Pb^{++}, Cu^{++}, Bi^{+++}, Cd^{++}, Hg^{++}

Summary

A new reaction has been used in the development of a test for the selenite ion, and is sensitive to 1 part of selenium in 20,040,000 parts of solution. The sensitivity is much greater (1 part of selenium in 38,168,000 parts of solution) if the solution is allowed to stand for at least 48 hours.

The reduction of the selenite ion is complete in solutions 6 *N* with respect to hydrochloric acid.

There is an exact stoichiometric relationship between the reacting ions.

The reaction takes place only slowly at room temperature, much more rapidly at elevated temperatures, and for small quantities of selenium is complete within 20 to 30 seconds at the boiling point.

Acknowledgment

The problem of selenium determinations was first suggested to the author by G. Frederick Smith, Department of Chemistry, University of Illinois. The author wishes to express his appreciation to J. T. Dobbins, Department of Chemistry, University of North Carolina, for his interest in the writing of this paper.

Literature Cited

(1) Andrews, *J. Am. Chem. Soc.*, **25**, 756 (1903).
(2) Coleman and McCrosky, IND. ENG. CHEM., Anal. Ed., **8**, 196 (1936).
(3) Dudley and Byers, *Ibid.*, **7**, 3 (1935).
(4) Knight, H. G., *Sigma Xi Quarterly*, **25**, No. 1, 1 (1937).
(5) Marvin and Schumb, IND. ENG. CHEM., Anal. Ed., **8**, 109 (1936).
(6) Williams and Lakin, *Ibid.*, **7**, 409 (1935).

RECEIVED April 22, 1937.

Feeding Device for Boiler Compound

J. L. SMITH
Naval Boiler Laboratory, U. S. Navy Yard, Philadelphia, Pa.

THE feeding device illustrated is in use at this plant for adding boiler compound at steady rates to boiler feed water. It maintains a constant head and constant rate by floating the intake end of the delivery tube. It is simple in construction and the necessary materials should be found in any laboratory.

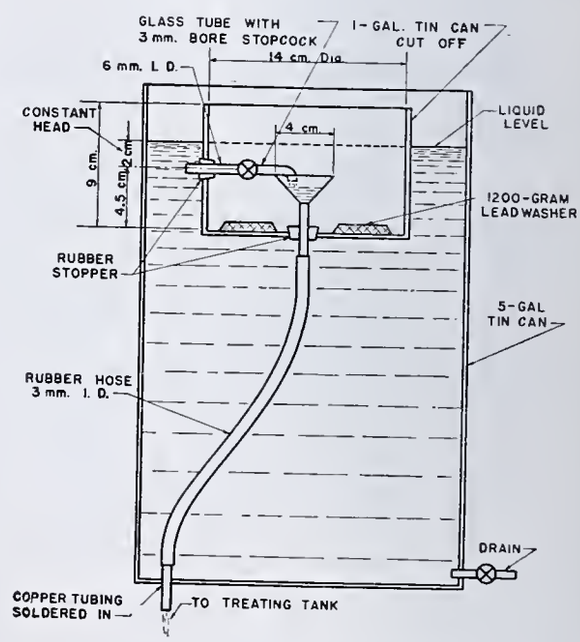

A 20-liter (5-gallon) and a 4-liter (1-gallon) tin can, a small glass funnel, copper tubing, a glass stopcock, rubber stoppers, scrap lead, small-bore rubber tubing, and a piece of glass tubing are all the materials needed. The device as illustrated will deliver from 20 to 180 ml. per minute at constant rate. Higher or lower rates may be obtained by varying the ballast in the float to vary the head, or by using tubing and stopcock of larger or smaller bore.

RECEIVED May 14, 1937

Determination of Barium, Sulfur, and Sulfates

A Rapid and Accurate Volumetric Method

STEPHEN J. KOCHOR, 185 Madison Ave., New York, N. Y.

The present method coördinates various well-known analytical procedures. It is based on the fact that the presence of a few ten-millionths of a gram of Ba^{++} ion can be definitely detected by means of a spot reaction on filter paper with a solution of oxybenzoquinone derivatives. By using standard solutions of varying normalities a desired accuracy can be very easily obtained in all practical determinations.

THE approved standard gravimetric sulfate determination has the inherent disadvantages of being tedious and of giving low or high results depending upon whether precipitation is made after removal or in the presence of undesirable ions. Many investigators therefore have been searching for a time- and labor-saving method, having reasonable accuracy and wide application. The ever-increasing number of papers appearing in the literature is sufficient proof that the analytical chemist of today is still in need of a satisfactory and practical procedure.

Much significant and valuable work has been done in recent years to achieve this purpose. Of all the various means of approach, the most promising were the volumetric methods using oxyquinone derivative solutions to determine the end point. Elaborate literature references are given by Streinger, Zombory, and Pollak (*3*) and by Schroeder (*2*).

Over a thousand volumetric sulfate determinations were made by the writer, following proposed methods in which oxyquinone derivative solutions to determine the end point were used. In more than 20 per cent of these determinations, he was unable to obtain check or acceptable figures, as the gradual color change made the end-point observation very difficult.

He therefore started an elaborate investigation to determine the causes or factors that were responsible for obtaining accurate results in some instances and not in others. At the very beginning, experimental evidence showed that it was not sufficient to accept the fact that oxyquinone compounds form red-colored barium salts, and that the presence of interfering ions is the cause of the discrepancies in the results. He therefore attempted to clear up the mechanism of the end-point reaction and studied the very interesting behavior of these compounds in solution. This investigation is not yet completed, and its results will be the subject of a separate paper.

The method described herein is the first practical achievement of this investigational work. It has been tried out on a large number of coal samples and on samples of various industrial products, yielding satisfactory check results in every case.

In the present method the author coördinates well-known analytical procedures. For the end-point determination he takes advantage of the fact that with a spot test on filter paper, using oxyquinone compound solutions as reagents, the presence of less than 1γ of Ba^{++} ion may be positively detected. As a reagent either tetrahydroxyquinone or dioxyquinone (rhodizonic acid) salt solutions can be used. The preparation of these reagents is described by Homolka (*1*). The author prefers to call these compounds reagents instead of indicators, for the reason that they do not follow Wilhelm Ostwald's theory, accepted for organic indicators.

The following solutions are necessary for the determination:

Standard barium chloride solution. The normality may vary according to the amount of SO_4^{--} ion to be determined and the degree of accuracy desired.

Standard sodium or potassium sulfate solution. The normality should correspond to that of the barium chloride solution.

Oxyquinone compound solution, prepared in the laboratory or secured on the market.

General Procedure

Introduce the solution containing the sulfate into a 250-cc. beaker, render acid with hydrochloric acid, evaporate to a volume of about 25 cc., and treat with an excess of ammonia. If the presence of phosphates is suspected, precipitate with ferric chloride. Without filtering, evaporate the mixture to about 10 cc. and introduce barium chloride solution until a drop produces a definite red coloration on filter paper previously treated with the reagent solution. It is advisable to mark a strip, 10 to 12.5 cm. (4 to 5 inches) long and 0.6 cm. (0.25 inch) wide, with the reagent solution, so that successive tests can be made on the same paper, thus facilitating comparison with the reaction previously obtained. To make the spot test, the solution containing all precipitated matter must be ammoniacal in reaction.

Evaporate again to a volume of 10 cc., add approximately 0.5 gram of sodium acetate as a buffer, and test to see whether Ba^{++} is still in excess; render alkaline with ammonia and retitrate with the sodium sulfate solution until the presence of Ba^{++} is no longer shown. The addition of 0.1 cc. of standard barium chloride or sodium sulfate solution is sufficient (10 cc. volume) to bring about the reappearance or the disappearance of the red coloration on the test paper. The discharge of the red color is taken as the end point. The difference in readings of the two burets gives the exact result. Where great accuracy is not the chief requirement, the time of evaporation can be saved, but corrections should be made for volume differences previously ascertained on blank determinations.

Standardizing Sodium Sulfate Solution against Barium Chloride. (1 cc. = 1 mg. of S = 2.5 mg. of SO_3 = 3 mg. of SO_4.) To 29 cc. of barium chloride add 30 cc. of the sodium sulfate solution, and evaporate to a volume of about 10 cc. Render it alkaline with 3 drops of strong ammonia and add about 0.5 gram of sodium acetate. If the spot test is negative introduce 1.5 cc. more of the barium chloride solution when a definite rose-red border line develops on the test paper. For back-titration 0.5 cc. of the sodium sulfate is used. Addition of 0.1 cc. of either solution is sufficient to make the red color appear or disappear on the test paper.

Three gravimetric checks are made. Each time 30 cc. of sodium sulfate solution are drawn from the same buret and the average weight of barium sulfate equals 0.2172 gram or 29.85 mg. of sulfur.

Determination of Sulfur in Coal. Neutralize the collected washings of the calorimetric bomb, after the B. t. u. determination, with the usual sodium carbonate solution, using methyl orange as an indicator. In most cases the volume of sodium carbonate solution used gives an indication of the approximate amount of sulfur present. First neutralize the solution with hydrochloric acid, add 8 to 10 drops in excess, and then oxidize with 5 to 6 cc. of saturated bromine water. Evaporate the solution to 20 to 25 cc., then render it ammoniacal, and evaporate further to about 10 cc.

Add barium chloride solution in excess (spot test positive) and follow the general procedure. Filtration now is not necessary, as by making the spot test on the prepared filter paper, the precipitates present in the drop will remain fixed in the center. In the case of bituminous coals, which contain 12 to 25 mg. of sulfur per gram, standard barium chloride solution having a value of 1 mg. of sulfur per cc. is used. For hard coals, in which more than 1 per cent of sulfur is rarely found, the use of a 0.025 *N* barium chloride solution is advisable (1 cc. = 0.4 mg. S = 1 mg. SO_3 = 1.2 mg. SO_4).

TABLE I. TOTAL SULFUR DETERMINATION

Analysis	Sulfur Found in Rubber: Gravimetric	Sulfur Found in Rubber: Spot test
	Mg.	*Mg.*
1	18.12	17.5
2	16.93	17.9
3	17.5[a]	18.3
4[b]	15.8	15.7

[a] Gravimetric determination made after the bulk of zinc had been removed from the solution with sodium hydroxide.
[b] Two 1-gram samples were burned. After oxidation and precipitation of the bulk of zinc from the united bomb washings, the filtrate was brought to 200 cc. volume. The colloidal zinc hydroxide precipitate was washed 8 times with cold water, 6 to 8 cc. at a time. A volume of 100 cc. was used for each determination.
The zinc hydroxide precipitate was redissolved in hydrochloric acid, treated according to the general procedure, and titrated with a 0.025 *N* barium chloride solution. In the zinc hydroxide precipitate 3.0 mg. of sulfur were found.

The following is a tabulation of sulfur results, on a gram basis, obtained in several types of coal, by both the gravimetric and the present volumetric methods:

	Gravimetric	Spot Test
	Mg.	*Mg.*
Barley	10.2	10.3
Semibituminous slack	36.4	36.9
Bituminous nut	21.6	21.6
Bituminous R/M.	24.8	24.8

In a series of 30 determinations a 0.5-mg. deviation was the largest found. In 18 cases there were no differences in the results found by the two methods. On the remaining samples the checks were between 0.1 and 0.3 mg.

A B. t. u. and volumetric determination can be finished conveniently in 2 hours. In routine work 6 sulfur determinations may be made in 3.5 to 4 hours' time by one operator with two oxygen bombs at his disposal.

TOTAL SULFUR DETERMINATION IN RUBBER. Burn a 1-gram sample with oxygen (25 atmospheres) in the calorimetric bomb. After oxidizing the collected washings with bromine water, follow the general procedure. In spite of the presence of amphoteric zinc, exceeding 10 to 20 times the amount of sulfur, the end point determination is definite and accurate to at least 0.2 cc. of the standard solution used.

Four volumetric determinations and gravimetric checks were made on the same rubber sample, each time using 1 gram of the sample (Table I). The gravimetric determination was made in the presence of zinc. The determinations when the author's procedure was pursued were finished in 1 to 1.25 hours, including the weighing time.

DETERMINATION OF SULFATE IN PLASTER OF PARIS. Weigh preferably 5 grams of the sample, dissolve, and make up to 500 cc. volume, to assure a fair representation of the material. Take a 10-cc. aliquot for a determination, or transfer a 0.1-gram sample into a 250-cc. beaker and dissolve in hydrochloric acid and water, according to standard methods. The total volume should not exceed 20 to 25 cc. Introduce into the hot solution standard barium chloride solution (1 cc. = 1 mg. S) in excess and then follow the general procedure described above.

In 10 cc. of solution representing 0.1 gram of plaster of Paris, the gravimeter method gave 82.5 per cent of $CaSO_4 \cdot {}^1/_2 H_2O$, and the spot test 82.8 per cent. The total time consumed in making this type of analysis, using a 0.1-gram sample, was between 0.5 and 0.75 hour.

DETERMINATION OF SO_4^{--} IN CEMENT. Transfer a 1-gram sample into a 250-cc. beaker, bring it into solution according to approved methods, and dilute with hot water to 20 to 25 cc. Introduce into the hot acid solution 0.025 *N* barium chloride solution in excess, heat to boiling, and follow the general procedure for an end-point determination.

An analysis of a cement gave the following results: by the gravimetric method, 18.3 mg.; by the proposed spot test, 18.7 mg. The time consumed for the volumetric analys including the weighing, was 0.75 hour.

DETERMINATION OF SO_4^{--} IN ZINC SULFATE. After solutic follow the general procedure.

In 10 cc. of zinc sulfate solution analyzed by both metho the following quantities of SO_4^{--} ions were found: gra metric, 49.5 mg.; volumetric, 49.8 mg. The volumet analysis was performed in 0.5 hour.

DETERMINATION OF SO_4^{--} IN ALUM OR ALUMINUM SULFAT To an aliquot of the sample, introduce the standardized bariu chloride solution in excess. Heat to boiling, neutralize, add excess of ammonia, then follow the general procedure.

Using both methods, in 10 cc. of solution the followi quantities of SO_4^{--} ions were found: gravimetric, 46.14 mg present volumetric method, 45.6 mg. The volumetric anal sis took 15 to 20 minutes.

The barium sulfate precipitate after weighing was e tracted with dilute hydrochloric acid. The filtrate was evap rated to a volume of 2 to 3 cc. and then made alkaline wi ammonia in excess. A white flocculent precipitate solub in sodium hydroxide was produced, showing the presence occluded alumina in the barium sulfate and thus accountir for the higher value obtained by the gravimetric method.

DETERMINATION OF SULFUR IN IRON AND STEEL. Dissolve t iron or steel in an evolution flask in the usual way and collect t hydrogen sulfide in 25 cc. of water containing 1 gram of sodiu hydroxide. Acidify with hydrochloric acid, oxidize with bromi water, and evaporate to 3 to 5 cc. volume. Then add ammoni and follow the general procedure, using the 0.025 *N* solutions barium chloride and sodium sulfate.

Analysis of two 5-gram samples gave by the cadmium sulfic method 2.45 and 1.70 mg., by the volumetric method 2.32 an 1.52 mg. of sulfur.

DETERMINATION OF GELATIN-ASH SULFATE CONTENT. A 5 grams of gelatin by the standard method in a platinum dis Dissolve the ash in 5 to 10 cc. of hot water and 2 to 3 cc. of stror hydrochloric acid. Add 2 to 3 drops of ferric chloride solutio neutralize, and render it ammoniacal with ammonia, after whic introduce 0.025 *N* barium chloride solution in excess and follo the general procedures.

Analysis of a 5-gram gelatin sample gave by the gravimetr method 11.5 mg., and by the volumetric method 11.28 mg. sulfur. After ashing was completed, the determination by t author's method was finished in 15 to 20 minutes.

DETERMINATION OF SULFUR IN INSECTICIDE SOLUTION Two samples of insecticides were analyzed by the gravimetr and volumetric methods. For the gravimetric determinatio in each instance two 2.5-gram samples were burned wit oxygen at 30 atmospheres' pressure in the calorimetric bom for the volumetric determination a 2.5-gram sample was use The SO_4^{--} ions resulting from the combustion were dete mined in the gravimetric determinations according to t standard procedure, and in the volumetric determination b the present method. The time consumed for the volumetri determination, including weighing the sample, was 1.25 hour

	Mg. [a]
Sample 1	
Gravimetric	4.2
Volumetric	4.4
Sample 2	
Gravimetric	3.88
Volumetric	3.88

[a] Results calculated to a 2.5-gram sample.

Discussion

The examples were selected at random. All the volumetri determinations (except check determinations of sulfur in steel were made by the writer. All the gravimetric analyses an their checks (except coal analysis) were made by workers wit

5 to 25 years of analytical laboratory experience. In every nstance the results by the volumetric method were completed n the specified time, but those by gravimetric methods were ıot complete until the following day. A great number of recise gravimetric tests in triplicate were made on coal and no esult was higher than any obtained by the proposed method. n all tests performed by the author's present method, there as no instance when a definite end point could not easily e secured within a range of 0.1 to 0.2 cc.

No interference was experienced when common ions were resent. The strontium ion if present may interfere with btaining the true end point, as it gives a red-colored pre-ipitate with oxyquinone compounds; however, this precipi-ate is soluble in dilute acetic acid.

From the qualitative experimental evidences presented, it ppears that the method can be applied not only for the ccurate determination of sulfur or sulfate in inorganic echnical products, but also in biochemical laboratories (urine nalysis, etc.), and in the organic chemical industries—for nstance, for the rapid determination of free sulfuric acid and ulfonated components in phenol and naphthalene sulfona-ion mixtures.

Acknowledgment

As the analytical part of this work was carried out in the Central Testing Laboratory of the City of New York, the author wishes to express appreciation to Stroud Jordan and the entire staff of the laboratory for their coöperation. He is indebted to Stanley Mayer for many encouraging suggestions, and to Martin Lang and Harry Dash for their assistance and performance of a great number of gravimetric checks.

At the same time the author feels it his duty to express his sincere thanks to the Ba-Re Company, 185 Madison Ave., New York, N. Y., for the liberal supply of stable solution of oxyquinone compounds, which courtesy enabled him to achieve the foregoing work of research.

Literature Cited

(1) Homolka, B., *Ber.*, **54**, 1393 (1921).
(2) Schroeder, W. C., Ind. Eng. Chem., Anal. Ed., **5**, 403 (1933).
(3) Strebinger, Zombory, and Pollak, *Z. anal. Chem.*, **105**, 346 (1936).

Received February 3, 1937. Part of a paper presented first at the regular meeting of the chemists of the Central Testing Laboratory of the City of New York, January 9, 1937.

A Simple Gas Thermoregulator

R. M. KINGSBURY
Bureau of Chemistry and Soils, U. S. Department of Agriculture, Washington, D. C.

THERE are occasions in many laboratories when, if for any reason an electric thermoregulator is not convenient r available, a gas regulator could be used. In most gas regu-ıtors now in use, the flow of gas is controlled by a column of ıercury which is adjusted to close a small inlet at the tem-erature desired. A common fault of these regulators is that ıe current of incoming gas causes small globules of mercury to rise and adhere to the sides of the tube, thereby causing a rise in temperature above that which is desired.

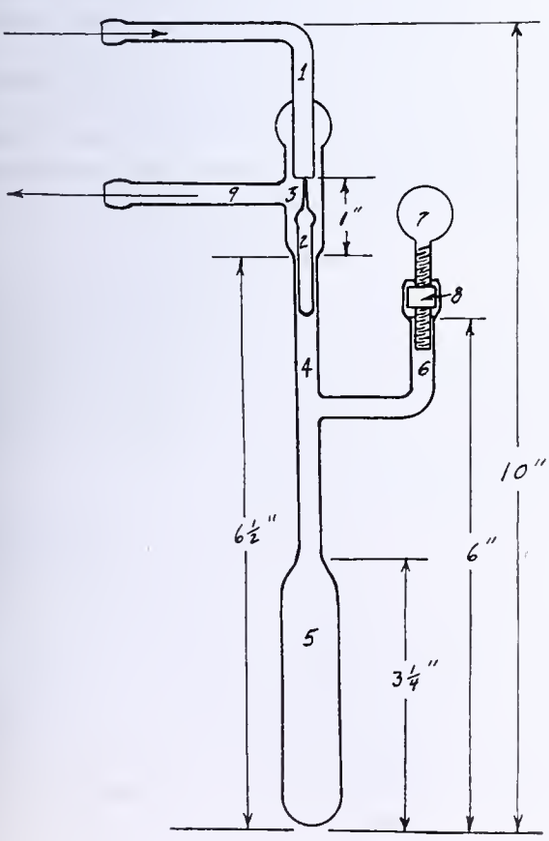

The accompanying sketch illustrates a gas regulator in which the flow of gas is controlled by a glass valve, 2, which closes or opens the inlet opening as the mercury column rises or falls because of changes of temperature. Thus, any splashing of mercury and consequent change of temperature are prevented. The regulator can be adjusted to the desired temperature by turning the thumbscrew, 7, as in other gas regulators.

The principal dimensions are indicated on the sketch. Tubes 1, 4, 6, and 9 are of 5-mm. inside diameter, the mercury bulb, 5, and the valve chamber, 3, are of 15- and 8-mm. inside diameter, respectively, and the valve, 2, is of 4-mm. outside diameter.

The opening in the inlet tube which acts as a valve seat is prepared before sealing by cutting the tube off square and filing, if necessary, to make it perfectly flat. A small notch about 0.25 mm. deep is made across one edge, and the end is then uniformly polished in a flame. The valve is made by drawing out a thin-walled tube to a diameter of 1 or 2 mm. and sealing it so as to leave a prong about 1 cm. long. The tube is heated carefully and a slight bulb is blown at the point where the tube starts to taper. The opposite end is then drawn out and sealed about 3 cm. from the bulb. The valve is then inserted and the inlet tube is sealed in place.

Any thumbscrew taken from a small ringstand clamp can be used for an adjusting screw. A small nut, selected to fit the screw, is filed down to about 6 or 7 mm. in diameter and cemented into the enlarged opening in the side arm, 6, with a thick litharge and glycerol cement.

In order to permit accurate adjustment for all temperatures, the top of the mercury in the adjusting arm should be about 5 mm. below the level of the mercury in the main column when at room temperature.

Other details of construction are evident from the sketch.

A regulator of this type has been in use for more than a year, and controls the temperature of a 12-liter water bath within a range of 50° to 100° C., with a variation of about ±0.5° C.

Received May 3, 1937

2,4-Dihydroxyacetophenone as a Qualitative Reagent for Ferric Iron

S. R. COOPER, Howard University, Washington, D. C.

SEVERAL methods have been proposed for the qualitative detection of ferric iron, but the ferrocyanide and thiocyanate methods of Wagner (*3*) are commonly employed in systematic analysis. Necki and Sieber (*1*) prepared 2,4-dihydroxyacetophenone and observed that it gave a red color with a solution of ferric chloride.

The purpose of this investigation was to ascertain if this color reaction could be used as the basis for a sensitive qualitative detection of ferric iron.

Preparation of Reagents

The 2,4-dihydroxyacetophenone was prepared and purified according to the method given by Necki and Sieber (*1*). One and five-tenths parts by weight of anhydrous zinc chloride were dissolved in 1.5 parts by weight of glacial acetic acid, through the application of heat, and to the solution one part by weight of resorcinol was added. The mixture was heated on a sand bath until it had started to boil (145° to 150° C.). Then the flame was removed and the reaction allowed to complete itself while the mixture remained on the sand bath. The temperature was kept below 150° C. in order to prevent the formation of resinous products. Upon diluting the reaction mixture with cold water, the crystalline compound separated. These crystals were washed with a cold dilute solution of hydrochloric acid to remove the zinc chloride. The substance was further purified by mixing it with dilute hydrochloric acid solution and animal charcoal, and boiling for a few minutes. The hot solution was filtered, and upon cooling the compound precipitated. This procedure was repeated several times, giving a final product which consisted of white needles. The melting point of the compound was 142° C. A solution consisting of 10 grams of the compound dissolved in 100 ml. of 95 per cent ethyl alcohol was made.

The following solutions were prepared and standardized: (1) a solution of ferric chloride containing approximately 2 mg. of iron per ml. and 5 ml. of 6 *M* hydrochloric acid per liter; (2) solutions of copper nitrate, mercurous nitrate, mercuric nitrate, chromic nitrate, cobalt nitrate, nickel nitrate, manganese chloride, and aluminum chloride containing approximately 100 mg of metal ion per ml.; (3) approximately 2 *N* solutions of hydrochloric, nitric, and sulfuric acids.

Table I. Sensitiveness of Test for Iron with 2,4-Dihydroxyacetophenone

Volume of Solution	Weight of Iron	Observation
Ml.	*Mg.*	
1	0.0040	Light red color
1	0.0033	Light red color
1	0.0025	Light red color
1	0.0022	Very light red color
1	0.0020	Faint red color
1	0.0018	No visible color

Table II. Sensitiveness of Test in Presence of Interfering Metal Ions

Salt	Limit of Detection for Iron	Weight of Interfering Metal Present	Ratio of Metal to Iron
	Mg./ml.	*Mg./ml.*	
$Cu(NO_3)_2$	0.2857	86.71	300
$Co(NO_3)_2$	0.0571	102.34	1,800
$Ni(NO_3)_2$	0.2000	88.11	440
$MnCl_2$	0.0041	101.49	25,000
$Hg_2(NO_3)_2$	0.0034	103.65	30,500
$Hg(NO_3)_2$	0.0097	110.94	11,440
$AlCl_3$	0.0031	100.59	32,500
$Cr(NO_3)_3$	0.5000	112.53	225

Table III. Limiting Concentrations of Common Acids

Acid	Limiting Concentration	Weight of Iron
	N	*Mg.*
HCl	0.0606	1.000
HNO_3	0.0608	1.000
H_2SO_4	0.0314	1.000

Sensitiveness of Test for Iron

One milliliter of the iron solution to be tested was placed o a colorless watch glass, and 2 drops of the reagent were added The coloration produced was compared with 1 ml. of th same solution to which 2 drops of alcohol had been added All the solutions of ferric iron were made from the stock solu tion by proper dilution with distilled water. The results ar given in Table I.

The limit of detection was 0.002 mg. of iron in 1 ml. o solution, or 2 parts of iron in 1,000,000 parts of solution.

Action of Foreign Salts and Acids on Color Test

Solutions of salts of silver, lead, mercury, bismuth, copper cadmium, arsenic, antimony, tin, divalent iron, aluminum chromium, cobalt, nickel, manganese, zinc, barium, stron tium, calcium, sodium, potassium, magnesium, and the am monium radical were tested with the reagent to observe if an reactions occurred. No reactions were noted except in th following cases: mercurous nitrate gave a light yellow pre cipitate upon standing, mercuric nitrate gave a white precip tate upon standing, and aluminum and manganese chloride gave white precipitates.

Tests were next made to ascertain the maximum quantit of the interfering metal salts, which could be present withou interfering with the detection of the iron. For these test 1 ml. of a mixture of the ferric iron solution and the interferin substance was placed on a watch glass, and 3 drops of th reagent were added. The colors produced were compare with 1 ml. of the mixture containing 3 drops of alcohol an placed on a similar watch glass. The results are given i Table II.

In the cases of chromium, cobalt, nickel, and copper, the colo of the solutions interferes with the detection of the red colo

Similar tests were made to obtain the maximum quantity o the common acids which could be present without affecting th reaction. The results are shown in Table III.

Discussion

By the use of an alcoholic solution of 2,4-dihydroxyaceto phenone it is possible to detect 2 parts of ferric iron in 1,000 000 parts of solution if no other metallic salts are presen This compares favorably with the 2.1 parts per 1,000,000 fo the thiocyanate, and 2.6 parts per 1,000,000 for the ferrocya nide tests as reported by Nichols and Cooper (*2*), which wer performed under similar conditions.

Copper, cobalt, nickel, manganese, mercuric, mercurou aluminum, and chromium salts interfere, either because of th color of their solutions, or because they give a precipitate wit the reagent. Mercurous, mercuric, aluminum, and mangane salts give a precipitate with the reagent. However, the in terference which these metallic salts offer is not great, sin the iron can be detected in the presence of 300 times as muc copper, 1800 times as much cobalt, 400 times as much nicke 25,000 times as much manganese, 30,500 times as much me curous mercury, 11,440 times as much mercuric mercur 32,500 times as much aluminum, and 225 times as muc

ıromium. It is possible in solutions of ordinary analytiıl strength (10 mg. of metal ion per ml.) to detect the ferric on in the original solution, since aluminum, mercurous merıry, mercuric mercury, and manganese salts do not precipiıte before the red color has appeared.

The solution can be approximately 0.06 N in hydrochloric cid, 0.06 N in nitric acid, or 0.03 N in sulfuric acid without fecting the sensitiveness of the test. However, if the soluon is strongly acid, it can be neutralized to the point of inpient precipitation with ammonium hydroxide or sodium ydroxide solution and then the test applied.

Oxalates, tartrates, and citrates are not usually present in a ılution which is to be examined qualitatively, but if they are resent they interfere with the detection. From the very nature of the test, phosphates must be absent since they precipitate the ferric iron. Sugar and glycerol have no effect upon the reaction.

In short, the test compares favorably with the common methods which are employed for the detection of ferric iron. Above all, the compound is not difficult to prepare and is not costly.

Literature Cited

(1) Necki, M., and Sieber, N., *J. prakt. Chem.*, (N. S.) **23**, 147 (1880).
(2) Nichols, M. L., and Cooper, S. R., *J. Am. Chem. Soc.*, **47**, 1268 (1925).
(3) Wagner, A., *Z. anal. Chem.*, **20**, 349 (1881).

Received April 20, 1937.

A Sloping Manometer

MILTON BURTON
Department of Chemistry, New York University, New York, N. Y.

NEITHER the McLeod nor the Dubrovin gages are suitable for the measurement of pressures of the order of mm. when the pressure is subject to constant variation and ıust be continuously followed. In a previous article (*1*) ference was made to a sloping manometer used for rapid nd accurate measurement of such pressures; because of its onvenience, some curiosity has been expressed as to its esign and the method of filling. The complete manometer, ogether with the filling equipment, is shown in Figure 1. lthough the method of filling is fully as rapid as that of oja (*3*), there is an advantage in that the mercury is boiled ut within the apparatus and that the mercury which passes ıto the manometer does not come into contact with stopocks or the grease there present. The rapidity and conenience of this method are an advantage over Cameron's istillation method (*2*). Ordinary boiling out is, of course, n unsatisfactory method of filling this type of manometer ecause of manipulative difficulty and because even a trace f residual gas becomes an important factor in sloping maometers.

The manometer in Figure 1 is affixed to the filler at A, and is designed that the legs, B and C, are in the same plane when use. The trap, D, is slightly below the plane when in use. he tube, C, is constricted at the end within the trap, and the pper end is, as usual, somewhat thickened. Leg C is about 30 n. long; the other parts are in proportion.

To fill, the manometer is baked out under vacuum and the ercury in the 250-cc. bulb, E, is boiled at the same time with the opcock, F, set as shown. The mercury is permitted to become ompletely cool and the manometer is then rebaked and cooled. topcock F is then turned so as to admit air slowly into tube G, nd the mercury is thus forced over through tube H into the anometer. When the mercury stands approximately halfway tubes B and C, stopcock F is turned back to the position shown, ıus interrupting the mercury stream. The manometer may en be cut off at A. Whenever desired, more mercury may be troduced into bulb E through stopcock F.

This type of manometer is particularly useful when it is nportant that the manometer liquid shall not be a solvent or the gases studied. The constriction at the open end of ube C reduces the effect of the mercury hammer. The trap, , is employed because it is found as a matter of practice that, hen gases are suddenly introduced into a sloping manometer as often occurs in use), there is a tendency toward pulling ver bubbles into the closed leg. The trap prevents this.

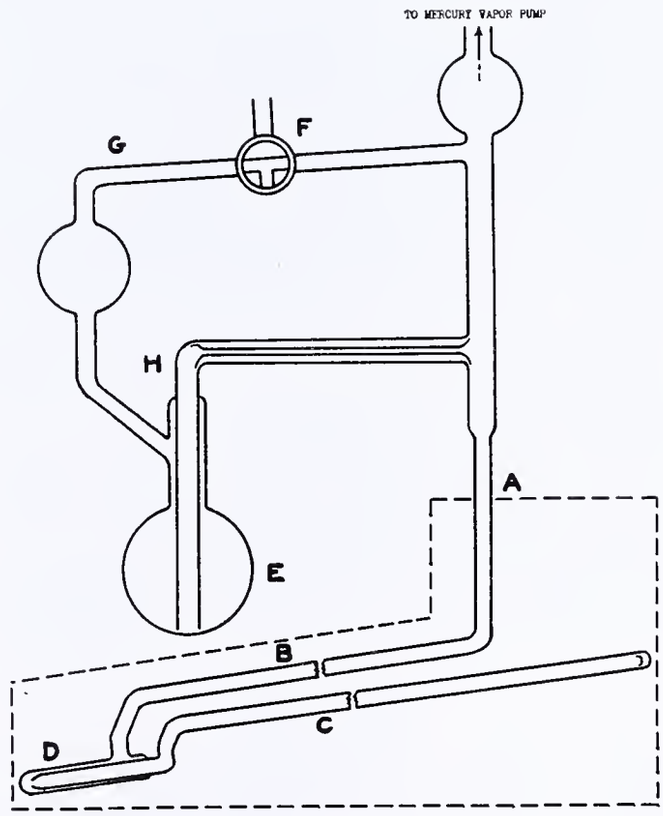

Figure 1

Any bubbles pulled over collect just below the inner seal and have no effect on the pressure reading.

If subsequent sticking is to be avoided, the gage should be thoroughly cleaned before any attempt is made to fill it.

The author has used the manometer successfully at a slope ratio of 25 to 1. The method of filling is, of course, equally satisfactory for the ordinary vertical U-tube manometer.

Literature Cited

(1) Burton, M., *J. Am. Chem. Soc.*, **58**, 1645 (1936).
(2) Cameron, A. E., Ind. Eng. Chem., Anal. Ed., **5**, 419 (1933).
(3) Doja, M. Q., *J. Chem. Education*, **10**, 574 (1933).

Received April 5, 1937

Rapid Analysis of Barite Ores Containing Calcium Fluoride

Without the Use of Fusions

ELLIS S. HERTZOG, U. S. Bureau of Mines, Tuscaloosa, Ala.

THE analysis of barite ores that contain a considerable amount of calcium fluoride presents a number of unusual difficulties, especially if a large number of samples must be analyzed in a short time. The books on quantitative analysis give methods suitable for the determination of barium sulfate in a high-grade barite ore, and methods for fluorine in fluorspar, but these methods were not intended for samples in which barium sulfate and calcium fluoride occur in combination.

The following method was designed for use in the control work on a series of concentration tests made on barite ores at the Southern Experiment Station of the U. S. Bureau of Mines. One of the main purposes of these tests was the elimination of calcium fluoride from the ores and for this reason its estimation was of first importance. Most methods for the determination of fluorine require fusions in platinum or involve a distillation process, which makes their use inadvisable when a large number of quick determinations are necessary. This method does not employ fusions, and for most control work the use of platinum is not required. Calcium carbonate, barium sulfate, and calcium fluoride are all determined on the same sample, with an accuracy that compares favorably with other methods when used upon ores of this particular kind. However, this method is not presented as being applicable to any and all ores of barium sulfate—for example, all the barite samples on which this method was used were fairly low in silica, making the uncorrected barium sulfate accurate. Another requirement is that the fluorine must be present as calcium fluoride. However, this investigation has encountered no samples containing fluorine combined in any other way than as calcium fluoride, at least in amounts detectable by ordinary chemical analysis. In all the samples the presence of the characteristic crystals of fluorite left no doubt as to the form in which the fluorine occurred. The samples were taken from several different states and all that contained fluorine were easily analyzed by this method.

The Method

All calcium compounds other than calcium fluoride are first leached from the sample and reported as calcium carbonate. Then the calcium fluoride, together with other acid-soluble compounds, is decomposed by a new wet method, leaving the barium sulfate and a small amount of silica behind as a residue. The amount of calcium oxide obtained from the decomposition of the calcium fluoride is then determined, and from this the fluorine or calcium fluoride is calculated.

PROCEDURE 1. DETERMINATION OF CALCIUM CARBONATE. Weigh out a 1-gram sample of <100-mesh ore into a 100-cc. lipless beaker, add 10 cc. of 10 per cent acetic acid, and give the beaker a rotary motion until the sample is thoroughly wetted by the solution. Cover with a watch glass and digest on hot plate for 1 hour. Keep at a temperature considerably below boiling, by placing the beaker at a distance from the part heated by direct flame. Give the beaker a rotary motion from time to time to bring the sample into contact with fresh liquid. Filter through a retentive type of filter, such as C. S. & S. 589 blue-label paper, and wash six times with cold water. If the sample contains gypsum more washings will be necessary. However, none of the samples encountered in this investigation contained more than a trace of gypsum, if indeed they contained any at all.

Ignite the filter and residue at a temperature of about 537.77° (1000° F.) for 30 minutes, weigh the residue, and report th loss in weight as calcium carbonate. If the loss on ignition 537.77° C. (1000° F.) for 30 minutes is obtained from an u leached sample and subtracted from the above calcium carbonat a more nearly correct figure will be obtained. This treatment assumed to remove all calcium except that combined as calciu fluoride from the sample. No compounds that would rend this assumption incorrect have been found in any samples teste

PROCEDURE 2. DETERMINATION OF BARIUM SULFATE. Retur the ignited insoluble to the 100-cc. beaker and add 20 cc. of co centrated hydrochloric acid and then approximately 0.5 gram crystalline boric acid. The purpose of the boric acid is to spee up and make complete the decomposition of the fluorspar. Bo gently for 15 minutes and then add 1 cc. of concentrated nitr acid. Continue just below boiling for 45 minutes longer. Th volume of the solution should be down to about 7 or 8 cc.; it tends to get below this volume before the time is up, ad a little concentrated hydrochloric acid as needed. When th time is up, remove from the hot plate and add concentrated h drochloric acid till the volume is approximately 10 cc. This ma be gaged with sufficient accuracy by comparing with a simil beaker containing 10 cc. of water. Return to the hot plate an boil gently for about 5 minutes, then wash the contents into 250-cc. beaker, and dilute to about 75 cc. with distilled wate Add 2 drops of methyl red indicator and make alkaline, usin concentrated ammonium hydroxide. Add concentrated hydr chloric acid, drop by drop, till acid and then add 2 cc. in exces If, as sometimes happens, the methyl red is decolorized befo the neutralization can be completed, litmus paper may be use as the indicator.

Dilute to 100 cc. using distilled water, and allow to stand f 1 hour. Heat quickly on a hot plate, and when near boilin add 2 cc. of dilute sulfuric acid (1 part of concentrated sulfur acid to 39 parts of water), boil 5 minutes, and filter while ho After the filter has drained, fill with hot water, drain completel and repeat, then give four ordinary washings with cold wate Ignite the filter and residue at 815.5° C. (1500° F.). Weigh an report as barium sulfate. If the barium sulfate is fairly hig (95.0 per cent or over), this figure will be fully as accurate a any of the usual fusion determinations. If the ore contains ver little quartz, it will be accurate at much lower percentages barium sulfate. If desired, this barium sulfate may be correcte for any silica it contains by treating it according to Procedure 2S

PROCEDURE 2S. CORRECTION OF BARIUM SULFATE FO SILICA. Transfer the barium sulfate residue to a platinum cru cible, ignite for a minute, cool, and weigh crucible and content Add 5 cc. of concentrated hydrofluoric acid and 4 or 5 drops concentrated sulfuric acid, evaporate to dryness, fume off th remaining sulfuric acid, and ignite 15 minutes at about 815.5° C (1500° F.). Report the weight of the residue as barium sulfat after adding 0.002 gram to the weight of this residue to allow fo its solubility in the hydrochloric acid from which it was filtere This correction is not recommended unless the barium sulfat has been purified from silica as above, as the two sources of erro tend to balance each other.

PROCEDURE 3. DETERMINATION OF CALCIUM FLUORIDE. Hea the filtrate from Procedure 2 to about 60° C., add 2 drops methyl red indicator, and then add concentrated ammoniu hydroxide till alkaline. Make just acid with 10 per cent oxali acid solution and then add 12 cc. in excess. Bring quickly to boil and continue for about 2 minutes, remove from the ho plate, and add 100 cc. of a saturated solution of ammonium oxa late. Allow to stand 1 hour and filter cold. Wash 6 times wit a hot 2 per cent solution of ammonium nitrate, to which has bee added a little ammonium oxalate. Ignite filter paper and precip tate at 870° to 925° C. (1600° to 1700° F.) for an hour. Co in a desiccator and weigh promptly. The weight of the calciu oxide times 1.3923 equals the weight of calcium fluoride.

The filtrate from Procedure 2 contains all the calcium derive from the decomposition of the fluorspar, the other calcium com pounds having been removed by the acetic acid extraction. It only necessary to determine the calcium in this solution and the

ABLE I. INTERFERENCE PRODUCED BY DEFINITE AMOUNTS OF CERTAIN MINERALS

ne gram of barite sample X used in each case. Procedure 3L to eliminate lead not used in these tests.)

Mineral Added	Gram	Interfering Compound	Analyses by Procedures 1, 2, and 3 $CaCO_3$ %	$BaSO_4$ %	CaF_2 %
...	..	None	1.92	96.19	1.03
...	..	None	2.03	96.07	1.00
halerite	0.05	5% ZnS	1.91	96.22	1.06
P. Fe_2O_3	0.05	5% Fe_2O_3	1.86	95.90	1.06
lena	0.01	1% PbS	1.91	96.09	1.00
lena	0.05	5% PbS	1.75	96.23	1.18
lestite	0.01	1% $SrSO_4$	2.08	96.37	1.35
lestite	0.05	5% $SrSO_4$	2.42	97.41	2.53
osphate rock	0.01	1% $Ca_3(PO_4)_2$	2.25	96.24	1.42

calculate the amount of calcium fluoride from which it was rived. However, procedures commonly recommended for lcium cannot be used here. In the first place, iron and alumi-m cannot be separated from calcium by the use of ammonium droxide, because calcium fluoride is precipitated along with e iron and aluminum as soon as the solution becomes alkaline. herefore, the calcium is precipitated as oxalate in an acid solu-on. At this point, if there is much lead in the sample it will be rtially precipitated along with the calcium, and so the method lits into two variations. If the sample contains not over 1 per nt of galena or lead sulfide the interference of the lead is very ght and may be neglected. If more than this amount of lead present, use Procedure 3L.

PROCEDURE 3L. DETERMINATION OF CALCIUM FLUORIDE IN E PRESENCE OF MORE THAN 1 PER CENT OF GALENA. Pass drogen sulfide into the filtrate from Procedure 2 for 5 minutes. black precipitate will form if lead is present. Then add 2 cc. 1 to 1 ammonium hydroxide and pass in hydrogen sulfide for out 3 minutes longer. Filter off the lead sulfide and wash veral times with hydrogen sulfide water. The filtrate should ill be acid. Boil the filtrate for about 1 hour to drive off the drogen sulfide, then make alkaline with ammonium hydroxide. a black precipitate forms, make the solution acid with hydro-loric acid and boil longer to drive off all the hydrogen sulfide. hen on making alkaline the iron will come down as a reddish own precipitate of ferric hydroxide, rather than a black one iron sulfide. Now make acid with hydrochloric acid, adding 2 . in excess, and treat the solution by Procedure 3.

Interference of Other Minerals

This method is intended to give the amount of calcium car-nate, barium sulfate, and calcium fluoride present in the rite ores. If an appreciable amount of silica is present an proximate idea of its amount can also be obtained by cor-cting the barium sulfate for silica. Other constituents may present in relatively small amounts. Those occurring in e ores tested in this work, named in order of importance, ere ferric oxide, galena, and sphalerite. The sphalerite was esent in only one sample, and then in very small amount. Some data which will give an idea of the amount of inter-rence caused by various minerals are reviewed in Table I. In ery analysis, a 1-gram sample of the same high-grade barite as used, and a given amount of the mineral to be tested as added— for example, if 5 per cent of galena is mentioned means that 0.05 gram of galena was added to the 1-gram mple of barite. This was not strictly a 5 per cent sample, t it did contain an amount of galena equal to 5 per cent of a gram sample. By using 1 gram of barite in every case, the me analysis would always be expectd from the barite and y deviation (outside of the limits of experimental error) was e to the mineral whose effect was being studied. Table I ows that 5 per cent of ferric oxide, 5 per cent of sphalerite, d 1 per cent of galena cause practically no interference in the alysis. Higher percentages of galena are cared for by using rocedure 3L. Any considerable percentage of strontium sul-te interferes with the accuracy of the method; it appears in e analysis as calcium carbonate, barium sulfate, and calcium oride, and some is not recorded at all. None of the samples encountered in these tests contained strontium either as sulfate or carbonate. Strontium carbonate if present would interfere only with the calcium carbonate analysis. If any strontium sulfate is present, a portion of it will positively appear in the calcium oxide obtained from Procedure 3. As this calcium oxide contains only traces of barium and is comparatively free from other metals, it can easily be tested qualitatively for strontium. A heavy precipitate of strontium could always be obtained from this calcium oxide if as little as 1 per cent of celestite (strontium sulfate) had been added to any of the barite samples. On the other hand, if the sample was fused to get into solution and then separated according to the usual scheme of qualitative analysis, 1 part of strontium sulfate in 95 parts of barium sulfate was very hard to detect.

Calcium phosphate is another constituent that should not be present if great accuracy is desired in the calcium fluoride determination. However, judging from the small amount of phosphorus present (Table II) in all the samples tested, it is not likely to cause trouble.

Table II gives data on four of the original untreated ores, each from a different locality. These analyses show that the minerals causing serious interference either were not present in the ores or else were there in such small amounts that their effect was negligible. The effects of the various correction procedures are also shown.

Accuracy of Method

The results obtained by this method, especially in regard to the calcium fluoride determination, were carefully checked. The calcium fluoride was run on several samples, using a method that depended on entirely different principles. This method, referred to in Table III as the distillation method, was modified from one used by the Krebs Chemical Company, and, briefly, was as follows:

A 10-gram sample was placed in a flask, and 100 cc. of concentrated phosphoric acid were added. Then water was added until the total volume was 125 cc. This mixture was distilled at con-

TABLE II. DETAILED ANALYSIS OF FOUR OF THE ORIGINAL ORES

Constituent	Constituent Present: Sample A %	Sample B %	Sample C %	Sample D %
$CaCO_3$ (uncorrected for ignition loss)	8.78	2.26	1.41	0.52
Loss on ignition*	0.85	0.45	0 69	0.18
$CaCO_3$ (corrected for ignition loss)*	7.93	1.81	0.72	0.34
$BaSO_4$ by Procedure 2	81.89	34.51	87.57	94.23
$BaSO_4$ by Procedure 2S*	81.98	34.20	87.42	94.02
SiO_2 by Procedure 2S*	0.11	0.51	0.35	0.41
CaF_2*	7.89	56.42	4.87	4.48
Fe_2O_3*	0.44	0.29	5.42	0.15
PbS*	None	5.30	None	None
P*	0.01	0.02	0.01	0.01
Gypsum, maximum per cent*	0.13	0.11	0.09	0.07
$BaCO_3$, maximum per cent*	0.01	0.00	0.01	0.01
$SrSO_4$	None	None	None	None
$SrCO_3$	None	None	None	None
Total of constituents marked with asterisks	99.35	99.11	99.58	99.67

TABLE III. CALCIUM FLUORIDE ANALYSES BY TWO UNRELATED METHODS

Sample No.	Calcium Fluoride: Distillation method %	Method described in this paper %
1	16.56	16.71
2	2.59	2.74
3	7.75	7.89
4	1.32	1.38
5	26.40	26.31
6	4.81	4.87
7	11.16	11.26
8	4.49	4.48

Table IV. Comparison of Original Ore Analyses with Cumulative Analyses from Concentration Tests

Product	Analyses $CaCO_3$ %	$BaSO_4$ %	CaF_2 %
Fraction A-1	2.88	95.39	1.28
Fraction A-2	7.29	86.36	5.26
Fraction A-3	21.17	53.21	22.72
[a]Composite, all fractions	8.76	82.00	8.00
Original ore A	8.78	81.89	7.89
Fraction B-1	0.42	97.40	1.95
Fraction B-2	1.07	83.96	12.56
Fraction B-3	1.62	71.00	22.30
[a]Composite, all fractions	0.56	94.43	4.25
Original ore B	0.52	94.23	4.48

[a] Cumulated on basis of individual weights and analyses.

stant volume through a condenser into a small quantity of ammonia water. After 400 cc. had been distilled over, all the fluorine was in the distillate. This distillate was then purified and the fluorine was precipitated by calcium acetate. It was then filtered off, washed, ignited, and weighed. This method appears to be reliable and closely checks the method described in this paper, as is shown in Table III.

Perhaps the best test of the accuracy of the method was given by analysis of the products in the various concentration tests. In the first place, an analysis of the original ore was made and then the ore was put through the concentration pr ess which separated it into several fractions of widely diff ent chemical composition. These new fractions were t analyzed separately and were composited, each in prop tion to its weight percentage, to determine the cumulat analyses. In other words, the cumulative analysis is the sult that would have been obtained if all the fractions had b thoroughly mixed into one sample and this single sample a lyzed.

Theoretically the cumulative analysis should be exactly same as that of the original ore. Small losses during the c centration operations and experimental errors in the analy themselves are responsible for slight departures from the id However, when the analyses of the original ore and the cal lated cumulative analyses are reasonably close together ov large number of tests, there is good reason to believe that method is reliable. Table IV contains detailed analyses tained from the samples of two concentration tests. It gi a general idea of what may be expected of this method, a shows that the method is not confined to samples whose ana sis is limited to a certain narrow range.

Received April 22, 1937. Published by permission of the Director, U Bureau of Mines. (Not subject to copyright.)

A Kjeldahl Digestion Apparatus

WESLEY M. CLARK
Columbia Breweries, Inc., Tacoma, Wash.

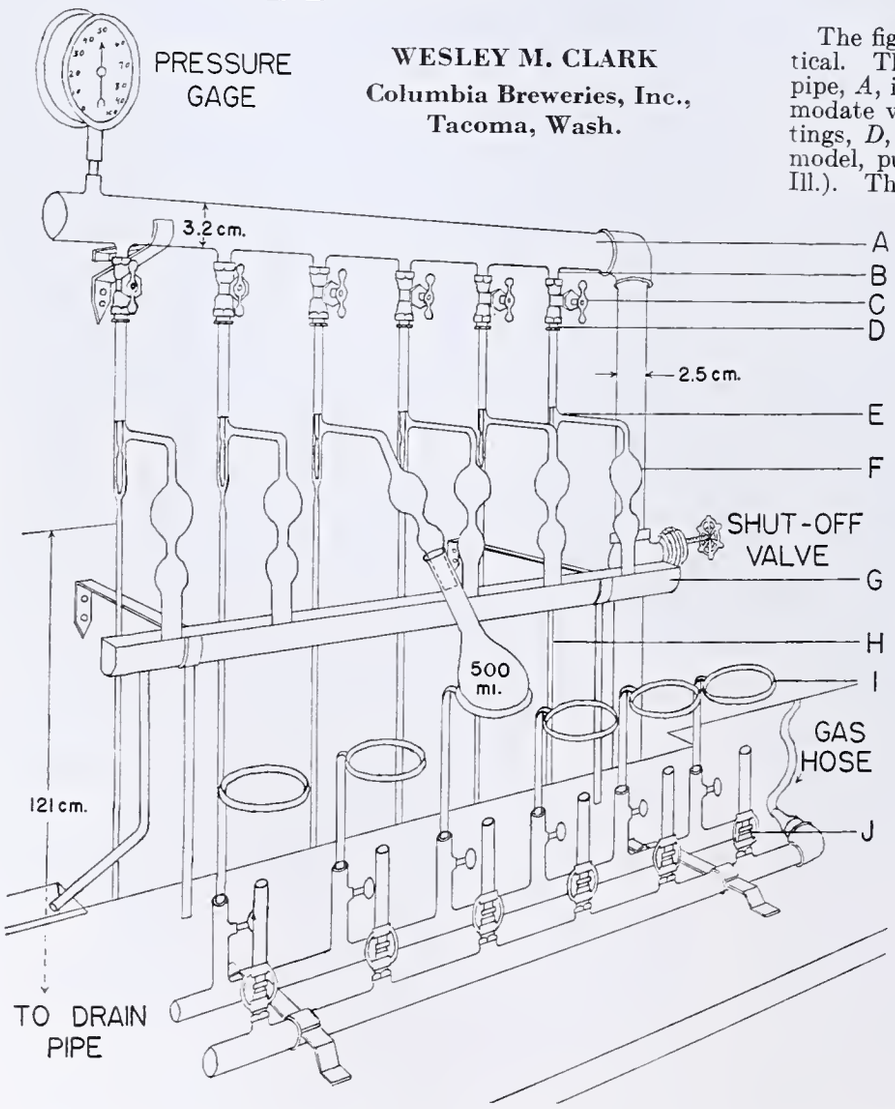

The easily constructed Kjeldahl digestion apparatus scribed below may be effectively used without a fu hood. It has no costly fittings, is economical of space, a each unit may be run independently of all the others, t reducing operating expenses to a minimum.

The figure shows a six-unit set, but larger ones are also pr tical. The apparatus consists of a horizontal water reserv pipe, *A*, into which are welded couplings, *B*, threaded to acco modate valves, *C*. Connected to the valves by short pipe tings, *D*, are glass suction pumps, *E* (University of Minnes model, purchased from E. H. Sargent and Company, Chica Ill.). These, like all the glass parts, are joined together by t ing over the ordinary rubber-tube connecti This type of union allows for sufficient flexibility the parts to make the danger of breaking ne gible.

The lower bulbs of the two-bulb stoppers, *F*, snugly against the lips of the Kjeldahl flasks, w the ends, projecting into the flasks, fit loos This facilitates use, and avoids breakage when moving the flasks for shaking, yet serves a quately to suck out the vapors during digesti When not in use, the ends of the bulb-stopp rest in a half section of acid-proofed pipe shallow lead trough, *G*, by means of which a sm amount of sulfuric acid drip is drained into sink. Connecting the suction pumps to the dr pipe (below the table and not shown in the d gram) are pieces of glass tubing, *H*, of the sa diameter as the lower arm of the pumps. Th fit into holes in the drain pipe by means of rub stoppers, which are then sealed with pitch a taped. The ring supports, *I*, for the flasks are justable, and for convenience are attached rigi by two clamps to the heating unit. The burn *J*, are the Fletcher adjustable type, with thre in the base for screwing into the gas line. T shutoff valve, while not necessary, is conveni in case it is desired to drain *A* or repair one the valves, *C*.

As for the corrosive action of the vapors and strong acid on the rubber-tu connections, the union between the bu stopper and the pump would be the only seriously affected, the other two being the water line and continually flushed out the flowing water. However, because of t

rge volumes of air drawn through this connection when e suction is on, which keep the upper end of the flask and e bulb-stopper cool, any action on the rubber is very greatly inimized. Furthermore, the operator can manipulate his sks with perfect comfort and safety.

If a larger number of units is desired, it is only necessary to crease the size of the water supply and drainage pipes. For e six-unit set a 3.75-cm. (1.5-inch) supply and a 7.5-cm. -inch) drainage pipe serve adequately when the pressure 2.8 kg. per sq. cm. (40 pounds) or more. For a 12-unit set 6.25-cm. (2.5-inch) supply and a 10-cm. (4-inch) drain pipe uld suffice.

The material for the apparatus, including pressure gage and shutoff valve, costs only $25. The set has been in constant use for more than 2 years, during which time hundreds of digestions have been made without any breakage or replacement of a single connection.

Acknowledgment

The writer wishes to express his thanks to Edward Ehmke for the construction of the diagram.

Received March 4, 1937.

Diphenylguanidine as a Standard in Neutralization Processes

ILLIAM M. THORNTON, Jr., Loyola College, and CHARLES L. CHRIST, Johns Hopkins University, Baltimore, Md.

OME 14 years ago Carlton (*7*) proposed the use of symmetrical diphenylguanidine as a reference substance in idimetry and alkalimetry. His test determinations are cellent; hence, in view of the obvious advantages to be ined through the employment of a soluble and sufficiently rong (*18*) organic base, it is rather surprising that the ethod has not attracted more widespread attention. Seval other authorities (*6, 9, 14, 15*), presumably on the basis experience, have commented upon the material in question ith great lack of agreement. Accordingly, the somewhat ntroversial state in which the subject seems to exist led the present re-examination.

Experimental

In putting the matter to the test, reliance was placed on constant-boiling hydrochloric acid; for the compoion of aqueous hydrogen chloride, when distilling at a ed temperature under the existing pressure, appears to ve been exhaustively studied (*1–5, 8, 10, 11, 13, 16, 17, 19, –27*). Having prepared a considerable quantity of such id, an approximately 0.1 *N* solution was obtained by diting an appropriate amount of it to the requisite volume. he normality factor of the resulting liquid was calculated d found to be either 0.10057 (*13*) or 0.10059 (*10*). For eater surety, the value of the solution was established avimetrically by precipitating the chloride ion with silver trate, taking the usual precautions that make for accuracy *2, 20*). Two such experiments showed the hydrochloric id to be 0.10054 *N* and 0.10049 *N*.

In the purification of diphenylguanidine the instructions Carlton (*7*) were conscientiously followed, using a supsedly high-grade specimen of the base, which had been rchased from a reputable supply house. Moreover, in rrying out titrations with the above-described hydrochlo- acid, Carlton's "double indicator" (bromophenol blue d methyl red) was introduced into the alcoholic solution the recrystallized diphenylguanidine to reveal the point complete reaction. Four experiments yielded the following concordant results: 0.10114 *N*, 0.10117 *N*, 0.10114 *N*, d 0.10111 *N*, the average of which is 0.10114 *N*.

Conclusions

This discrepancy between the normality deduced from nstant-boiling hydrochloric acid (0.10058 *N*) and obtained titrating the basic substance, amounting to nearly 0.56 per cent of the lower value, leads to the conclusion that diphenylguanidine, as procured in the open market, may not yield a reliable product under Carlton's treatment (*7*). On the other hand, could it be readily purified, such an organic base would be an eminently convenient volumetric standard. In fact, diphenylguanidine itself seems to react definitely with a strong acid, and the end point is sharp and easily discerned.

The present authors are planning to pursue the investigation further in the hope of either preparing really pure diphenylguanidine in a way that will not be too difficult or, acting upon the suggestion of Callan and Strafford (*6*), obtaining triphenylguanidine of the correct composition.

Literature Cited

(1) Bonner, W. D., and Branting, B. F., *J. Am. Chem. Soc.*, **48**, 3093 (1926).
(2) Bonner, W. D., and Titus, A. C., *Ibid.*, **52**, 633 (1930).
(3) Bonner, W. D., and Wallace, R. E., *Ibid.*, **52**, 1747 (1930).
(4) Briggs, T. R., *J. Phys. Chem.*, **28**, 644 (1924).
(5) Cadbury, W. E., Jr., *J. Chem. Education*, **12**, 292 (1935).
(6) Callan, T., and Strafford, N., *J. Soc. Chem. Ind.*, 43, 1T (1924).
(7) Carlton, C. A., *J. Am. Chem. Soc.*, 44, 1469 (1922).
(8) Carrière, E., and Arnaud, *Compt. rend.*, **179**, 1265 (1924).
(9) Chakmakjian, H. H., *J. Chem. Education*, **8**, 2060 (1931).
(10) Foulk, C. W., and Hollingsworth, M., *J. Am. Chem. Soc.*, **45**, 1220 (1923).
(11) Hendrixson, W. S., *Ibid.*, 37, 2352 (1915); **42**, 725 (1920).
(12) Hillebrand, W. F., and Lundell, G. E. F., "Applied Inorganic Analysis," p. 587, New York, John Wiley & Sons, 1929.
(13) Hulett, G. A., and Bonner, W. D., *J. Am. Chem. Soc.*, **31**, 390 (1909).
(14) Kling, A., and Lassieur, A., *Chimie & industrie*, Special No., 110 (May, 1924).
(15) Kolthoff, I. M., and Menzel, H., "Volumetric Analysis," tr. by Furman, Vol. II, p. 101, New York, John Wiley & Sons, 1929.
(16) MacInnes, D. A., and Cowperthwaite, I. A., *J. Am. Chem. Soc.*, 53, 558 (1931).
(17) MacInnes, D. A., and Dole, M., *Ibid.*, **51**, 1125 (1929).
(18) Metz, L., *Z. Elektrochem.*, **34**, 292 (1928).
(19) Morey, G. W., *J. Am. Chem. Soc.*, 34, 1029 (1912).
(20) Richards, T. W., and Willard, H. H., *Ibid.*, **32**, 28 (1910).
(21) Roscoe, H. E., *Ann.*, **116**, 213 (1860).
(22) Roscoe, H. E., and Dittmar, W., *Ibid.*, **112**, 343 (1859); *J. Chem. Soc.*, **12**, 128 (1860).
(23) Shaw, J. A., Ind. Eng. Chem., **18**, 1065 (1926).
(24) Sheldon, J. L., *J. Chem. Education*, **12**, 377 (1935).
(25) Smith, G. F., and Croad, G. F., Ind. Eng. Chem., Anal. Ed., **9**, 141 (1937).
(26) Vrevskii, M. S., *Z. physik. Chem.*, **112**, 109 (1924).
(27) Vrevskii, M. S., Zavarickii, N. N., and Sharlov, L. E., *J. Russ. Phys.-Chem. Soc.*, **54**, 360 (1923).

Received March 1, 1937.

A Modification of the Berl-Kullmann Melting Point Block

Electrically Heated Glass Melting Point Apparatus

F. W. BERGSTROM, Chemical Laboratory of Stanford University, Calif.

TO AVOID the use of liquid baths for the determination of melting points, Thiele (*7*) constructed a copper block, which proved to be satisfactory only in the modified form described by Berl and Kullmann (*1;* cf. *3, 5, 6, 8*). This block is of considerable value when one is concerned with substances of high melting point, but it suffers from the disadvantage that the capillary is observed against an illuminated background, so that the contents appear almost black and it is very hard to observe color changes or sweating prior to melting. It is felt that these difficulties have been overcome in the present modification, since the capillary is illuminated by light directed from above at an angle, the contents appearing therefore as in the customary liquid bath.

An electrically heated glass melting point apparatus designed for use with an ordinary 250° or 360° thermometer without stem correction is also described.

The copper block, *FGHI*, together with the lamp used for the illumination of the melting point specimen and its housing, *ABCDE*, is shown in Figure 1. The block itself is 5 cm. in diameter by 7 cm. in length (the dimensions in Figure 1 are given in inches) and it is pierced by a hole, *IJ*, parallel to the bottom and intersecting the vertical axis. A small hole, *G*, is drilled along the axis of the block to enter *IJ*, while a second hole, *KP*, is drilled from above to intersect *IJ* at the center. The angle ϕ which this hole makes with the vertical is 45–50°, and the angle θ between the intersecting planes determined by *GI-PK* and *GP-PJ* is 45–55°. If ϕ is 90°, it is difficult to observe the specimen in the capillary because of reflections from the surface of the glass. The thermometer is placed in *H*, which is drilled slightly below the bottom of *PJ* so that the melting point specimen in the capillary will be approximately on a level with the center of the thermometer. A little glass wool or copper powder is placed in the bottom of *H* to lessen the danger of breaking the thermometer.

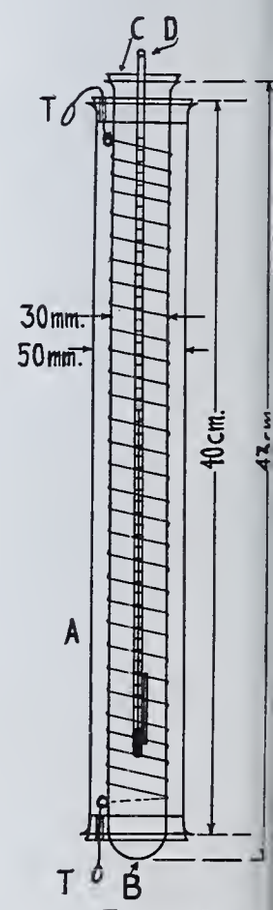

FIGURE 2

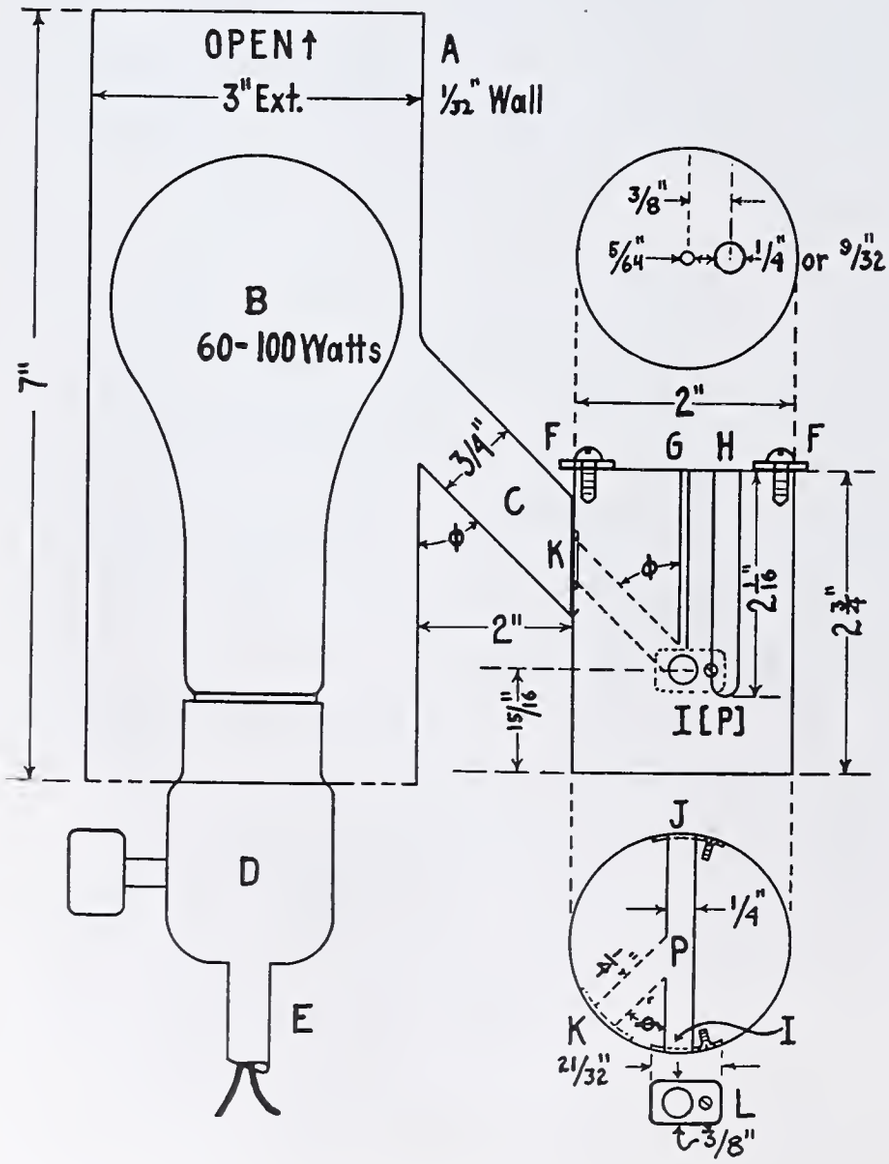

FIGURE 1

The bottom of the capillary is illuminated throu the slanting hole, *KP*, by means of the elect lamp, *B*, which is surrounded by a housing, made of brass tubing 0.8 mm. (0.03 inch) in thi ness. The open end of *C*, which fits snugly agai the melting point block, should be ground concav to the same radius of curvature. The holes, *I*, and *K*, are covered with small mica windows h in place by means of Monel metal or stainless st frames (see *L*) with a radius of curvature equal that of the block. (The author is indebted to department mechanician, Mr. Grebmeier, for design of these window frames, and for the act construction of the block.) The window, *K*, cl ing the slanting hole, *KP*, is 12 mm. (0.5 in wide, instead of the 10 mm. (0.375 inch) shown Figure 1 at *L*. Small mica windows, such as described, show less tendency than larger ones split in use.

Four small metal washers, *FF*, held on the of the block by set screws, serve to support block in a ring of 5-cm. (2-inch) internal diame (it may be necessary to cut away a portion of ring to accommodate *C*). An alternate suppor afforded by four set screws (with large hea around the side of the block near the top.

Heat is supplied by a Bunsen burner shiel from drafts by a thin brass or steel cylinder or pi but the portion of the block below *I* can be wou with asbestos-covered Nichrome wire and hea electrically in the manner described by Monsch (

is recommended that the block be heated rapidly to a tempera-e 10° or 15° below the melting point of the specimen, and then a rate gradually diminishing to 1° or 1.5° a minute within 3° to of the melting point. If the block is heated too rapidly, the ermometer lags, and the observed melting point is low. The ults, with proper operation, are as reliable as those obtained th a liquid bath.

For observation of the capillary and its contents (through ndow I), it is best to use one eye only, the other being kept en and directed against a dark background to avoid strain. e or two cheap magnifying glasses are placed in front of *I* and quare of metal (painted black) or black paper is placed behind ndow *I*, unless the substance in the capillary is dark colored gives a dark-colored melt, in which case a dully illuminated ite asbestos or transite board background is generally more isfactory.

Glass Melting Point Apparatus

The electrically heated glass melting point apparatus shown Figure 2 is a modification of that described by Dowzard d Russo (*2*).

The heating element of Nichrome wire (No. 24, 1.63 ohms per t) is wound on a long Pyrex tube, *B*, whose dimensions vary h the thermometers available. The spacing of the windings niformly 1.5 or 2.0 cm. To provide some insulation, an outer e, *A*, is placed around *B*, being held in place by two asbestos "stoppers" made by wrapping slightly moistened asbestos paper (2.5 cm. or 1 inch, in width) several times around *B*. The terminals of the heating element are tied to two small glass rings at the ends of *B*, and are brought through the asbestos stoppers to the outside. The melting point tube is fastened to the thermometer by means of fine copper wire or asbestos string. The thermometer passes through a cork stopper closing the top of tube *B*, the cork having a small V-groove cut on the side parallel to the axis. Heat regulation is provided by a rheostat (capacity 6 amperes) or by a bank of lamps. The rate of heating near the melting point should not exceed 1° a minute.

The melting point apparatus just described may be made with a Dewar seal at the top, as in the heater described by Franklin (*4*).

Literature Cited

(1) Berl and Kullmann, *Ber.*, **60B**, 814 (1927).
(2) Dowzard and Russo, Ind. Eng. Chem., Anal. Ed., **8**, 74 (1936).
(3) Eastman Kodak Co., "Synthetic Organic Chemicals," Vol. X, No. 2, p. 4, April, 1937.
(4) Franklin, "Nitrogen System of Compounds," American Chemical Society Monograph, p. 321, New York, Reinhold Publishing Corp., 1935.
(5) Friedel, *Biochem. Z.*, **209**, 65 (1929).
(6) Monsch, *Helv. Chim. Acta*, **13**, 509 (1930).
(7) Thiele, *Z. angew. Chem.*, **15**, 780 (1902).
(8) Walsh, Ind. Eng. Chem., Anal. Ed., **6**, 468 (1934).

Received April 30, 1937.

Quantitative Determination of Oil in Fish Flesh

MAURICE E. STANSBY and JAMES M. LEMON
U. S. Bureau of Fisheries, Technological Laboratory, College Park, Md.

Fish oils, being unusually susceptible to oxidation and polymerization, are difficult to extract quantitatively from fish flesh except after drying the flesh in a vacuum desiccator for a period of a week or more. A method is described in which the drying and oil-extraction processes are combined by extracting the fish with acetone. The crude oil thus obtained is purified by treatment with ethyl ether. A rapid semiquantitative method is also described in which the oil is extracted by agitating the moist fish flesh with anhydrous sodium sulfate and ethyl ether.

Data are presented to show that the widely quoted value of 7.1 per cent for the oil content of the common mackerel is in error, a value of 12 to 15 per cent being closer to the average oil content of this species.

ORDINARY methods of determining oil in flesh products such as meat are not entirely satisfactory for fish, because of the tendency of fish oil to decompose very readily en heated with the flesh. Such decomposition prevents a mplete extraction of the oil from the fish. In the methods linarily used for such products the substance is first dried oroughly, in order to prevent the extraction of water uble material and to ensure a complete recovery of the oil. e dried material is then extracted for about 15 hours in a ntinuous extractor, using ethyl ether or petroleum ether, re frequently the former. The solvent is then removed by aporation and the oil is dried and weighed.

In fish flesh, the greatest decomposition of the oil usually curs during the drying process; in order to minimize these anges, it is customary to employ a vacuum desiccator for is step, drying the fish over sulfuric acid. Since fish contins large quantities of gluelike substances, it has a tendency dry to a hornlike mass, enclosing moisture which is very ficult to remove. By mixing the fish flesh with sand or tton, this difficulty is lessened, and a fairly thorough drying is attained in from 10 days to 2 weeks. This procedure may result in a loss of oil either during the mixing of the flesh with the sand or during the subsequent transfer of the dried material to the extraction apparatus. Moreover, such a lengthy procedure is undesirable and in endeavoring to avoid it, the following methods were developed. The first method described is a rapid semiquantitative one. The second method is believed to give at least as great precision as any existing method and with a considerable saving in time. This method, in conformance with general usage, assumes that the oil content of a substance is equivalent to the content of substances extracted by ethyl ether from the dried material.

Semiquantitative Method

A brief description by Sebelin (*4*) has been given of a method, devised by Bull, for determining the oil content of fish. This method consists of mixing a weighed portion of finely ground fish with anhydrous sodium sulfate and then shaking with a measured quantity of benzene. An aliquot

TABLE I. FACTORS AFFECTING EXTRACTION OF OIL BY COLD METHOD

Effect of Solvent (Na_2SO_4 Used as Dehydrant)		Effect of Dehydrant (Ether Used as Solvent)			Effect of Mixing Dehydrant with Fish					
Solvent	Oil recovered	Dehydrant	Shaking time	Oil found	Method	Solvent	Oil found	Av.	Oil found	Av.
	%		*Min.*	%			%	%	%	%
							Fish 1		Fish 2	
Benzene	17.8	$CaCl_2$	10	2.3, 2.1	Well mixed	Benzene	8.4, 7.8	8.1	5.5, 5.4	5.45
Ether	17.7	Na_2SO_4	10	4.4, 4.6	Well mixed	Ether	8.3, 7.4	7.9	5.35, 5.55	5.45
Chloroform	17.5	$CaCl_2$	30	6.4, 8.9	Not well mixed	Benzene	5.2, 5.1	5.15	.. ..	..
Acetone	14.3	Na_2SO_4	30	8.3, 8.4	Not well mixed	Ether	8.6, 7 6	8.1	5.45, 5.75	5.6
		$CaCl_2$	60	10.2, 9.9						
		Na_2SO_4	60	10.1, 10.7						

portion of the benzene solution is then pipetted into one pan of a special balance equipped with a heating unit. The benzene is evaporated, and the balance then indicates directly the percentage of oil in the fish. The principle of this method, the extraction of oil by shaking with an oil solvent and dehydrating agent, has been used as a basis for the present method. A number of solvents and dehydrants were tried. It was observed that when benzene was used, as in the original Bull method, a very thorough mixing of the dehydrant with the fish flesh was required, a process involving the risk of loss of oil. When ether was used this difficulty was eliminated, similar results being obtained with or without mixing. Data regarding these experiments are shown in Table I. From a consideration of these data, it was decided that ethyl ether and sodium sulfate gave the best combination to be used.

TABLE II. EFFECT OF TIME OF SHAKING ON OIL RECOVERED

Sample I		Sample II	
Shaking time	Oil found	Shaking time	Oil found
Min.	%	*Min.*	%
10	8.3, 8.4	5	9.6, 3.7
30	10.1, 9.8	15	11.3, 10.8
60	10.7, 10.1	30	12.1, 11.7
		60	12.3
		120	12.7
		240	12.8

For shaking the samples a machine was used which had a 12.5-cm. (5-inch) horizontal stroke repeated 228 times per minute. Using this machine, the effect of the time of shaking upon the oil content found was determined as shown in Table II. It was concluded that a 1-hour shaking period was most suitable from the standpoint of obtaining most of the oil in the shortest possible time. While glass-stoppered bottles are most suitable, in the present work they could not be used, since the shaking machine required a special type of bottle. Cork stoppers gave the best results, neither dissolving in the ether nor allowing an appreciable escape of liquid; rubber stoppers are unsuitable. The following procedure was adopted:

Twenty grams of the finely ground flesh, free of skin and bones, are weighed into a shaking bottle. Twenty-five grams of anhydrous sodium sulfate and exactly 100 ml. of ethyl ether are added, and the bottle and contents are shaken for 60 minutes. After allowing most of the fine solid particles to settle out, a 20-ml. aliquot of the solution is pipetted through a filter and into a weighed beaker. The filter is washed with three 3- to 5-ml. portions of ether. The ether is evaporated off on a water bath or in front of an electric fan and the oil dried for 1 hour at 100° C. and then weighed.

Results using this method compared with other methods are shown in Table IV. This method is especially valuable in cases where subsequent tests are to be made on the oil where it is essential that no decomposition can have taken place. In such cases, a further aliquot of the ether solution is used for these tests.

When less than about 10 per cent of oil is present in the fish flesh this method is not at all accurate and a more thorough extraction using fresh solvent is required. In such cases the following modified procedure is used:

Twenty grams of the ground fish flesh and 25 grams of a hydrous sodium sulfate are stirred electrically for 5 minutes in 250-ml. centrifuge bottle with about 50 ml. of ethyl ether. T bottle is centrifuged and the solution decanted through a sintere glass crucible. This process is then repeated five times and t filter washed. The combined filtrates are then transferred to weighed dish, the ether is evaporated, and the oil is dried a weighed as in the previous method.

This method is more accurate than the shaking metho but it is not suitable for running many samples at once, a hence is often of less value. For fish of low oil content, ho ever, it is the only available rapid method. This modific tion is also suitable for the determination of the oil content fish livers.

Quantitative Method

Where a higher degree of accuracy is required, the follo ing method has proved to be satisfactory:

A 15- to 20-gram sample of finely ground fish flesh is plac in a continuous extractor and heated for 16 hours, replacing t solvent with fresh acetone after 2 hours. The solutions are th heated on a steam bath until all of the acetone and most of t water is removed. They are then put in a vacuum desiccat over freshly boiled sulfuric acid and the desiccator is evacuate When practically all of the water has been removed, as indicat by the cessation of foaming and bubbling or after about 3 hou the oils are removed, and 35 ml. of ethyl ether are added. Aft thorough shaking, the solution is poured through a filter, pref ably one of the sintered-glass type. The residue is washed wi several small portions of ether until the wash liquid is colorle pouring the solution in each case through the filter. The solution is washed into a weighed beaker and the ether remov in front of an electric fan. When the odor of ether is no long apparent, the beaker is placed in an oven at from 100° to 105° for 45 minutes. The beaker and oil are then cooled and weighe

TABLE III. EFFECT OF TIME OF ACETONE EXTRACTION ON PER CENT OF OIL FOUND

Extraction Time	Oil Obtained
Hours	%
6	12.32, 11.82
12	13.10, 13.25
16	14.03, 14.14
16 more with ether	14.33, 14.39
A. O. A. C. method	14.01, 14.11

TABLE IV. COMPARISON OF RESULTS OBTAINED BY THE DIFFERENT METHODS

Sample No.	A. O. A. C. Method	Acetone Method	Cold-Centrifuge Method	Cold-Shaking Method
	%	%	%	%
I	18.81	18.74	18.62	18.0
	18.79	18.69	18.54	17.6
	Av. 18.80	18.71	18.58	17.8
II	12.59	12.71	12.59	12.3
	12.70	12.65	12.54	11.9
	Av. 12.64	12.68	12.56	12.1
III	6.11	6.14	6.11	5.3
	6.18	6.19	6.15	4.7
	Av. 6.14	6.16	6.13	5.0
IV	2.49	2.54	2.59	1.14
	2.54	2.58	2.63	1.75
	Av. 2.51	2.54	2.61	1 45

ing this method a number of precautions must be observed in der to obtain the best results.

SAMPLING. If the oil content of the edible portion of the h is desired, it is necessary to remove skin and bones. In moving the skin care must be taken to avoid loss of oil, nce in many species of fish a considerable portion of the l occurs next to the skin. It is better to leave some of the in adhering to the flesh, if necessary, rather than to lose nsiderable oil. Fish flesh loses water by evaporation very adily, and for this reason it is important to complete the itial steps, to the point where the flesh has been weighed it, as rapidly as possible.

EXTRACTION. For this work the Fire Underwriters model traction apparatus was used, although undoubtedly any pe of continuous extractor would be suitable. Extractions nger than 16 hours give very little additional oil. A few periments were run in which the fish which had been exacted for 16 hours with acetone was then reëxtracted for 16 urs with ethyl ether. The second extraction gave a small nount of oil, sufficient to change the results by only a few nths of a per cent. On the other hand, a minimum of arly 16 hours of extraction is required, as was shown by wer values obtained with shorter extraction periods. me of these results are shown in Table III.

The fact that a 16-hour heating with acetone does not dease the solubility of oil in ether was established by refluxg a pure sample of fish oil with acetone for this period, reoving the acetone, and dissolving in ether. The oil was en completely soluble.

REMOVAL OF ACETONE AND WATER. Most of the water well as the acetone should be removed on a steam bath, nce otherwise a considerable period of time will be required remove water in the desiccator. On the other hand, it was lieved to be safer to remove the last portion of water in a siccator rather than to risk any oxidation which might cur upon prolonged heating. Probably a small trace of e water is not removed by the desiccator at all, but this nount is not large enough to interfere with the method. e acetone-water solution containing a little oil obtained m the first 2 hours' extraction should be kept in a separate ntainer from the main bulk of oil and acetone throughout e drying process, since this greatly aids in removing the ater.

PURIFICATION OF CRUDE OIL. After removal of acetone d water, oil and other extractives remain in the flask. ese extractives are of a somewhat gummy consistency, inluble in ether and soluble in water. There is often present so some fine protein material that has passed through the imble. The oil can be very easily separated from these bstances by a short shaking period with ether. If the oil lution is filtered through paper, considerable difficulty is countered in washing the oil from the paper. This can avoided by the use of a fine grade of sintered-glass cruoles. The residue remaining after treatment with ether ould be completely soluble in water.

DRYING OF OIL. This step is one of the most unsatistory of any, since even a short heating tends to decompose e oil. However, a certain amount of heating is required to move water. Experience has shown that when a 45-minute riod is used, the error will be small unless considerable ater is present; this may occur if the preceding steps were t carried out properly. In order to make certain that the is dry, it is well to heat for a second 45-minute period, and en reweigh.

FROZEN AND SALTED FISH. Frozen and salted fish which ve been kept in storage for a considerable period will give ry poor results when the oil content is determined by any ethod employing ether or any of the other well-known oil lvents. This is due to the decreased solubility of decomposed fish oils in the various solvents. Instances have been encountered in which there was an apparent drop in oil content of nearly 50 per cent for fish kept in storage for several months. This difficulty cannot be overcome until some other solvents are found which will dissolve both fresh and decomposed fish oils. These considerations apply to fish meal to an even greater extent.

Results

The method of the Association of Official Agricultural Chemists (*1*) for oil determination in meats which allows a number of variations in drying procedure was used as a standard to compare the methods developed in this paper. The method used involved drying the fish flesh mixed with sand in a vacuum desiccator over sulfuric acid. Results in Table IV compare these methods. The acetone-extraction method compares very well with the ordinary ether-extraction method. The cold-shaking method gives approximate results on fairly oily fish. On samples having a low oil content, the cold-centrifuge method gives much better results.

TABLE V. VARIATION IN OIL CONTENT OF MACKEREL (*Scomber scombrus*)

Month Fish Caught	Average Oil Content
	%
April	4.3
May	8.5
June	9.0
July	10.6
August	18.3
October	10.1
November	8.2

The acetone method has been applied to the determination of oil in the common mackerel (*Scomber scombrus*), which is listed in a number of charts and reference works (*2, 3, 5*) as having an oil content of 7.1 per cent. The authors' studies indicate a wide variation in the oil content of this fish, with an average value of about 12 to 15 per cent. Aside from a few fish caught in the spring, or late fall, a value of 7 per cent is rarely encountered. Table V shows the seasonal variation in the oil content of mackerel. It should be pointed out that over 70 per cent of the mackerel are caught from July through September.

While these methods have not been applied to any substances other than fish or fish products, it appears probable that they would be of value for oil determinations in other food materials.

Literature Cited

(1) Assoc. Official Agr. Chem., Official and Tentative Methods of Analysis, 3rd ed., 290 (1930).
(2) Bodansky, M., "Introduction to Physiological Chemistry," New York, John Wiley & Sons, 1934.
(3) Leach, A. E., and Winton, A. L., "Food Inspection and Analysis," 4th ed., New York, John Wiley & Sons, 1920.
(4) Sebelin, *Chem.-Ztg.*, **53**, 489 (1929).
(5) Sherman, H. C., "Chemistry of Food and Nutrition," 4th ed., New York, Macmillan Co., 1932.

RECEIVED April 19, 1937. Presented before the Division of Agricultural and Food Chemistry at the 93rd Meeting of the American Chemical Society, Chapel Hill, N. C., April 12 to 15, 1937. Published with the permission of the Commissioner, U. S. Bureau of Fisheries.

The Determination of Dissolved Nitrogen in Water

NORRIS W. RAKESTRAW AND VICTOR M. EMMEL
Woods Hole Oceanographic Institution, Woods Hole, Mass.

IN THE COURSE of the study of sea water it became necessary to make determinations of its nitrogen content. Earlier measurements were not explicit on the separation of the argon and other inert gases, and a method was accordingly sought which would yield values for nitrogen directly, rather than by difference. It was essential that the analysis be fairly rapid, to permit the routine determination of as many samples as possible, and accurate to about 1 per cent of the nitrogen present, and that it require not more than about 100 ml. of water.

The procedure to be described consists of two definite parts: removal of the total gas from the water sample, and its analysis for nitrogen. The first step is accomplished by repeatedly spraying the water into an evacuated chamber, removing the extracted gas after each injection. The quantity of extracted gas is measured manometrically in a constant volume, and its content of oxygen and nitrogen, respectively, measured in the same way after reaction with phosphorus and with lithium. Calcium, magnesium, and lithium have all been used as reagents for combination with free nitrogen, but preliminary work showed that lithium was the most suitable under the conditions necessary for this work.

Description of Apparatus

Figure 1 shows the necessary working parts of the apparatus, with a slight exaggeration of scale for the smaller parts.

It is constructed entirely of Pyrex glass, although soft glass may of course be substituted for the long manometer arms. All connections are made of 7-mm. tubing, and the section in which the analysis is carried out, between *a*, *b*, *d*, and *f*, is of 7-mm. capillary, to reduce the volume.

The mercury reservoir, *D*, which serves as a pump, has a volume of 250 ml. The evacuation chamber, *E*, in which the gas is extracted, has a volume of 300 ml., and connects with a large mercury leveling bulb, as shown. Chamber *F*, in which the water sample is measured and stored, has a capacity of 100 ml. Ground-glass joints occur at *a*, *f*, *g*, and *b*, and the latter, which is not lubricated, is protected with a mercury seal held in place by a short piece of rubber tubing.

The phosphorus chamber, *A*, has a volume of between 2 and 3 ml. with a small plug of glass wool. The lithium chamber, *B*, has a similar volume and contains a deep steel crucible made by drilling out a steel rod. The chamber is surrounded with an asbestos shield.

The tip of the jet, *h*, where it enters *E*, is drawn down to about 0.5 mm. This orifice should be as small as possible, without danger of clogging. The water enters *E* through this orifice, at high velocity.

The inverted U-tube contains ascarite, calcium chloride, and dehydrite, in that order, separated by plugs of cotton, for the purpose of removing carbon dioxide and water vapor from the extracted gas. It is made of 8-mm. tubing, about 20 cm. from *f* to *g*. It can be removed from the line at the ground-glass joints for refilling, and short lengths of glass rod are inserted in the male parts of these joints, to reduce the volume.

The volumes of chamber *C* and stopcock 2 are determined before sealing them into the line, and should lie between 1.5 and 2 ml., approximately the volume of the sample to be analyzed.

The analytical part of the apparatus as far as stopcock 5 is evacuated by means of a Hy-vac pump, and the suction line contains a 3-way stopcock (not shown) through which dry air can be admitted to the system through calcium chloride and soda lime.

The mercury used in *D* should be dried in an oven occasionally and the manometer evacuated to remove moisture.

Manipulation

PREPARATION OF PHOSPHORUS. After filling the phosphorus chamber with pieces cut under water, and plugging the end with glass wool, the moisture must be removed by heating and evacuation, being careful that bubbles do not carry phosphorus out of the tube. The removal of water is complete when the pressure in the system is constant on heating and cooling.

PREPARATION OF LITHIUM. Bright pieces of lithium are cut under dry carbon tetrachloride and placed in the steel crucible and the chamber is closed and evacuated as rapidly as possible. After evacuation the lithium is melted to drive off all volatile matter. It was found that the first heating of fresh lithium liberated some volatile products, most of which recombined with the metal on continued heating. The noncombined residue is then pumped off, after which repeated heating and cooling p

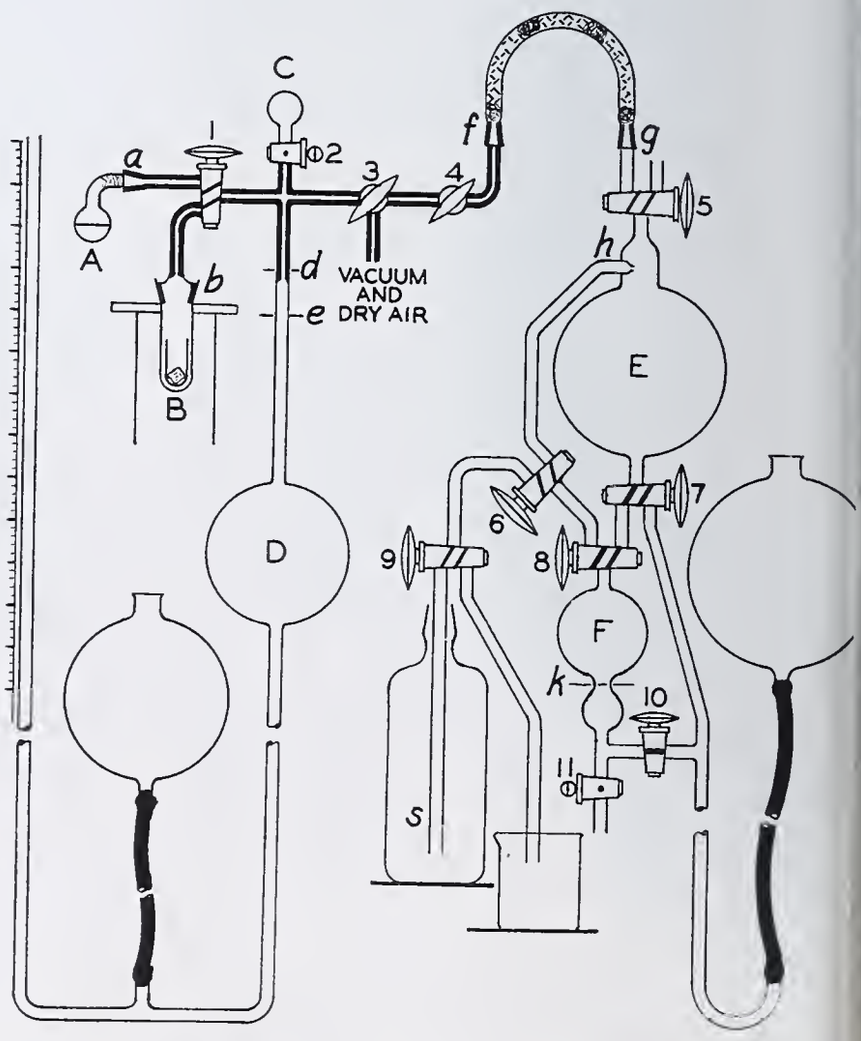

FIGURE 1. DIAGRAM OF APPARATUS

ce no further changes in pressure. The nature of this phenomen was not further investigated, but it was observed that bsequent reaction of the lithium and nitrogen proceeded more pidly if only the noncombining residue was pumped off. thium from which all the volatile substances were removed ring heating was very slow to react with nitrogen the first two or three times, but its reactivity increased thereafter.

The lithium prepared in this way can be used for as many as ten analyses.

FIGURE 2

CALIBRATION OF VOLUME. A reference mark is established at *e*, about 1 cm. below the end of the capillary tubing, and all pressure and volume measurements are made with the mercury at this mark. The gas being measured is in every case contained in *C* and in the rest of the system between 1, 3, and *e*. The volume of *C* being known accurately, this quantity of dry air can be introduced into the system and the pressure read on the manometer. The difference between this reading and that of the evacuated system calibrates the manometer for subsequent readings, subject, of course, to changes in atmospheric conditions.

MEASUREMENT OF WATER SAMPLE. The water sample is measured in *F*, between stopcock 6 and a reference mark, *k*. Chamber *F* and the inlet connections around to the end of tube *s* are first filled with mercury and the sample is sucked in slowly from the original bottle. The volume contained in this chamber is calibrated by the weight of water removed from a sample. For this particular apparatus it was 1 ml.

Gas Extraction

It is convenient to arrange three supports for the main mercury veling bulb: one at the level of 5, another at the level of 10, d another about 80 cm. below 10.

The water sample is sucked into *F* as described above. Chamr *E* is evacuated by filling with mercury and lowering. Raising e mercury bulb, the water is forced from *F* into *E*, by both suction d pressure. This is continued until mercury comes through *h*. the water issues from the orifice at high velocity and strikes e neck of the flask, the greater portion of the dissolved gas is noved from solution. The water sample is run down into *F* ain, through 7 and 8. Mercury is then run up into *E*, through and the extracted gas is forced into the drying tube, which in e meantime has been evacuated by the oil pump, along with e remainder of the analytical line. There will always be a few ops of water on the surface of the mercury and a little of this ust be run up into the stopcock and later removed very carefully suction.

Chamber *E* is then evacuated by lowering the mercury and e water sample again injected through 8, 6, and *h*. The small mount of gas extracted in this stage is also forced into the ying tube. Four such circulations of the water, or at most e, will remove all but insignificant amounts of dissolved gas. e first stage is always somewhat slower than the subsequent es, because of air bubbles.

Analysis of Gas

After reading the manometer with the analytical line evacuated, pcock 1 is closed, 3 and 4 are opened, and the mercury is vered in *D*, whereby most of the extracted gas is removed from e drying tube. Stopcocks 3 and 4 are closed and the gas is ced into *C*. Stopcock 2 is then closed and the remaining gas the drying tube is pumped into *D* by lowering the mercury ain. This is also forced into *C*, leaving only an insignificant idue in the drying tube. Opening 2, the volume of total gas measured manometrically between 1, 3, and *e*.

By means of the mercury in *D* the gas is pumped out of *C* into The phosphorus is melted by gentle heating and allowed to ct for 5 minutes, after which the remaining gas is pumped out *A* into *D* and then back again, where it is allowed to react with e melted phosphorus for a few minutes longer.

The deoxygenated gas is pumped back again into *C*, in two ges as before, and its volume measured manometrically. In e same way, it is then pumped in two stages into the lithium amber, *B*. The lithium is heated above its melting point. This be done electrically, but it was found more convenient to e a Bunsen burner. As combination of the nitrogen with the hium goes on it is necessary to lower the mercury level continually, to keep the inside level approximately at *d*. The reaction is generally completed in 5 minutes.

After cooling, the residue is pumped into *C* again and its volume is measured by the manometer. From the four pressure readings and the laboratory temperature and pressure it is possible to calculate the total volume of gas dissolved per liter of water and the relative and absolute amounts of oxygen and nitrogen in the gas.

The entire process of extraction and analysis requires about an hour and a quarter, but the actual time may be considerably shortened by carrying out the analysis of one sample and the extraction of the next simultaneously. The drying tube may be evacuated and closed off ready for the next sample as soon as the preceding one has been pumped out of it.

Accuracy of the Method

Attempts were made to check the accuracy of the method by comparing the volumes of gas extracted from air-saturated distilled water with accepted values. Water was shaken with air in a flask for 15 minutes and then allowed to stand open in the laboratory for several days. The volumes of air extracted from such water samples and the accepted values for the solubility of air are given in Table I. Uncertainty as to the degree of saturation of the water may partially account for the fact that the observed results were about 1 per cent below the theoretical. Nevertheless, this percentage of error is not considered unreasonable.

The completeness with which oxygen is removed by this method was checked by comparing the values obtained for oxygen in samples of sea water against the results obtained simultaneously by the standard Winkler method. Table II shows this comparison. Only in the last case is the discrepancy significantly beyond the limits of error of the two methods.

Samples of air were analyzed for oxygen and nitrogen, further to check the accuracy of the method. This was done by filling chamber *C* with air passed through calcium chloride and soda lime. The volume of this sample, 1.52 ml., is approximately that obtained from 100 ml. of sea water. Table III shows the results, compared with values from International Critical Tables.

TABLE I. DETERMINATION OF DISSOLVED AIR

Temp.	Dissolved Air Observed	Dissolved Air Theoretical
° C.	Ml./l.	
24.3	17.3	17.5
22.0	18.0	18.0
22.0	17.8	18.0
22.0	17.8	18.0
23.0	17.3	17.7
Av.	17.6	17.8

TABLE II. REMOVAL OF OXYGEN

O_2 by Extraction	O_2 by Winkler	O_2 by Extraction	O_2 by Winkler
Ml./l.	Ml./l.	Ml./l.	Ml./l.
4.45	4.46	4.31	4.28
4.85	4.89	5.12	5.12
5.01	4.94	5.15	5.20
4.60	4.52	5.42	5.54
4.76	4.71	Av. 4.85	4.85

TABLE III. ANALYSIS OF AIR

O_2 %	N_2 %		O_2 %	N_2 %
20.7	77.7		20.9	....
20.7	78.1		20.8	78.1
20.9	77.8		21.1	78.1
21.1	77.1	Av.	20.8	77.9
20.6	....	Theoretical	20.99	78.03 (Critical Tables)
20.6	78.3			

Storage of Water Samples

Since the apparatus was not adapted for use on board ship, it was necessary to store the water samples taken at sea in such a way as to prevent interchange of gas between the water and the atmosphere. It is impossible to keep samples in the ordinary type of citrate bottle, tightly clamped with no cushion of air over the water, without a large percentage of breakage. This difficulty was completely overcome by the device shown in Figure 2, which consists of a U-tube partially filled with mercury and inserted in a citrate bottle completely filled with water. Expansion and contraction merely move the mercury column, and although water may escape outward past the mercury none passes the other way. When inserting the tube care must be taken that water completely fills the short arm and that no air is trapped by the stopper. Samples are stored in a refrigerator until analyzed, especially the deeper, colder samples, which may become supersaturated at higher temperatures.

Analyses

To show the results of the application of the method to actual sea water some analyses are given in Table IV. These samples are from various depths at two different stations in the Atlantic south of Cape Cod: No. 2666, north of t Gulf Stream; and No. 2667, south of the Gulf Strea Further studies on the content of dissolved nitrogen in s water will be reported in a subsequent paper.

TABLE IV. ANALYSES OF SEA WATER

Station 2666			Station 2667		
Depth *Meters*	Temp. ° *C.*	Nitrogen *Ml./l.*	Depth *Meters*	Temp. ° *C.*	Nitrog *Ml./*
0	25	9.72	....	....	....
10	22.5	9.50	10	26.0	8.8
40	14.3	11.0	....	....	....
60	12.5	11.0	60	20.9	9.6
80	12.0	10.8	....	....	....
100	12.3	11.1	....	....	....
150	7.9	11.4	....	....	....
200	9.6	11.7	200	18.2	9.6
300	7.7	12.4	....	....	....
400	5.2	12.6	....	....	....
500	4.7	12.7	500	17.3	10.3
600	4.7	12.5	....	....	....
800	5.2	12.6	800	14.8	10.4
1000	4.0	12.5	1000	11.5	11.3
1200	4.1	12.8	....	....	....
1500	3.6	12.8	1500	5.2	12.6
2000	3.5	13.0	....	....	....
3000	2.6	13.3	....	....	....
....	...	....	4000	3.1	13.9

RECEIVED April 21, 1937. Contribution No. 141 from the Woods H Oceanographic Institution.

An Improved Salt Bridge for Electrometric Measurements

WILLARD M. BRIGHT AND ELMER L. MILLER, University of Toledo, Toledo, Ohio

IN THE course of making electrometric measurements, it was found that available salt bridges were not entirely satisfactory. At the present time the bridges most recommended are those developed by Irving and Smith (*3*) by a modification of an earlier type described by La Mer and Baker (*4, 5*), or of the type devised by Stern (*8*). Other apparatus of this nature has been introduced by Clark (*1*), Müller (*7*), and Michaelis (*6*).

The chief disadvantage of such siphon bridges has been the necessity of maintaining the same liquid level throughout the system, or using a bridge containing an aqueous gel such as agar saturated with potassium chloride. The former method is inconvenient and the gels are unsatisfactory, as the presence of a foreign porous material at a junction may be a cause of error (*2*). Also, it is advantageous to use a free liquid junction in order to ensure a rapid attainment of equilibrium conditions.

The bridge shown in the figure is entirely constructed of hard-glass tubing with 0.5-cm. bore, except for reservoir *B* which is made from the bottom of a 250-mm. Pyrex test tube. T ground-glass plug shown at *D*, which is used to maintain liquid column in the tube below it, may be replaced by a sh rubber tube and a clamp.

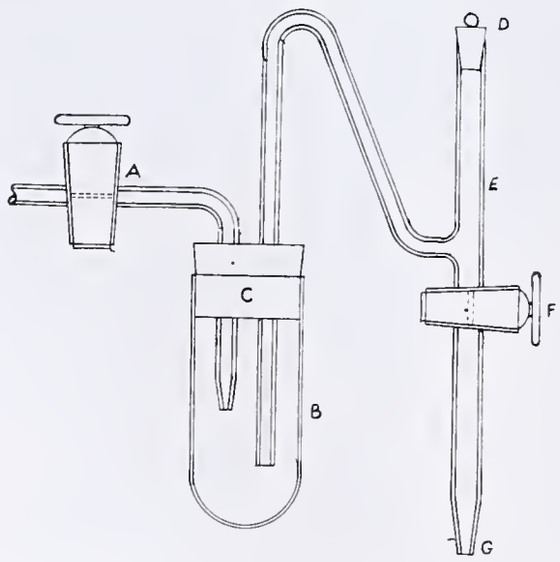

In preparing the bridge for use, the reservoir is filled with chosen salt solution. After closing the stopcock at *A*, which part of the reference electrode vessel, the reservoir is forced rubber stopper *C*. This will fill the bridge to *E*, with any exc being drawn off through the lower stopcock. The vertical tu is then filled by drawing the salt solution up into it with stopcock at *F* open, then closing *F* while the plug at *D* is fit into the tube. An extension tube may be fastened to *G* to all any convenient height arrangement of the apparatus as is us in titrations or pH determinations.

This bridge has been used in a number of other ways. T tip of a single electrode vessel may be introduced at *D* in pl of the plug while the stopcock in the vertical tube is clos for determination of cell potential. Measurement of concent tion cells has also been accomplished with this apparatus

This salt bridge may be left connected in a circuit fo long time, as it provides a very long path for diffusion. gives a free liquid junction, and may be used at any hei in reference to the liquid levels in the rest of the system. T only precaution to be observed is that connections must air-tight to prevent siphoning.

Literature Cited

(1) Clark, W. M., "Determination of Hydrogen Ions," Baltim Williams and Wilkins Co., 1928.
(2) Fricke, R., *Z. Elektrochem.*, 30, 577 (1924).
(3) Irving, G. W., and Smith, N. R., IND ENG. CHEM., Anal. Ed. 480 (1934).
(4) La Mer, V. K., and Baker, L. E., *J. Am. Chem. Soc.*, 44, 1954 (1922).
(5) La Mer, V. K., and Parsons, T. R., *J. Biol. Chem.*, 57, 613 (1923).
(6) Michaelis, L., "Praktikum der physikalischen Chemie," Ber Julius Springer, 1922.
(7) Müller, E., *Z. Elektrochem.*, 30, 577 (1924).
(8) Stern, H. T., *J. Phys. Chem.*, 29, 1583–4 (1925).

RECEIVED May 7, 1937.

A Pressure Regulator for Vacuum Distillation

R. L. EMERSON AND R. B. WOODWARD
Massachusetts Institute of Technology, Cambridge, Mass.

AFTER considerable experience with various forms of apparatus similar to those described by Bertrand and hers (*1, 2, 3*) for regulating pressure in vacuum distillation, pressure regulator was developed which is more compact d better adapted for practical usage, as shown in Figure 1.

The apparatus is mounted by a buret clamp on the stem, *L*, such manner that it may be rotated clockwise. The system be evacuated is attached at *A* and the pump at *B*. When the sired vacuum is approached, the stopcock, *D*, is opened slightly d mercury is allowed to rise almost to the inlet, *H*. When e vacuum is within 1 or 2 mm. of that desired, the mercury allowed to rise further to close off inlet *H* so that a globule of ercury, 1 to 2 mm. high, circulates in the system *KL*.

If there is no bleed or introduction of gas into the distilling stem, the circulation of the mercury will soon cease and the essure will remain constant. If there is an intentional bleed, e circulation of the mercury in *KL* is dependent on the volne of the bleed and the capacity of the pump. If the capacity the pump is far in excess of the gas entering as a bleed, a gradl reduction in pressure may develop when the distillation is ntinued over several hours. This can be prevented by the dition of a side tube on the inlet tube, *A*, above the junction, which is controlled by a pinchcock and a piece of pressure bing. This is opened sufficiently to balance approximately e pump capacity and bleed. The circulation of the mercury *KL* is thus maintained constant, and the mercury does not nd to rise in inlet tube *A*. At the close of the distillation and

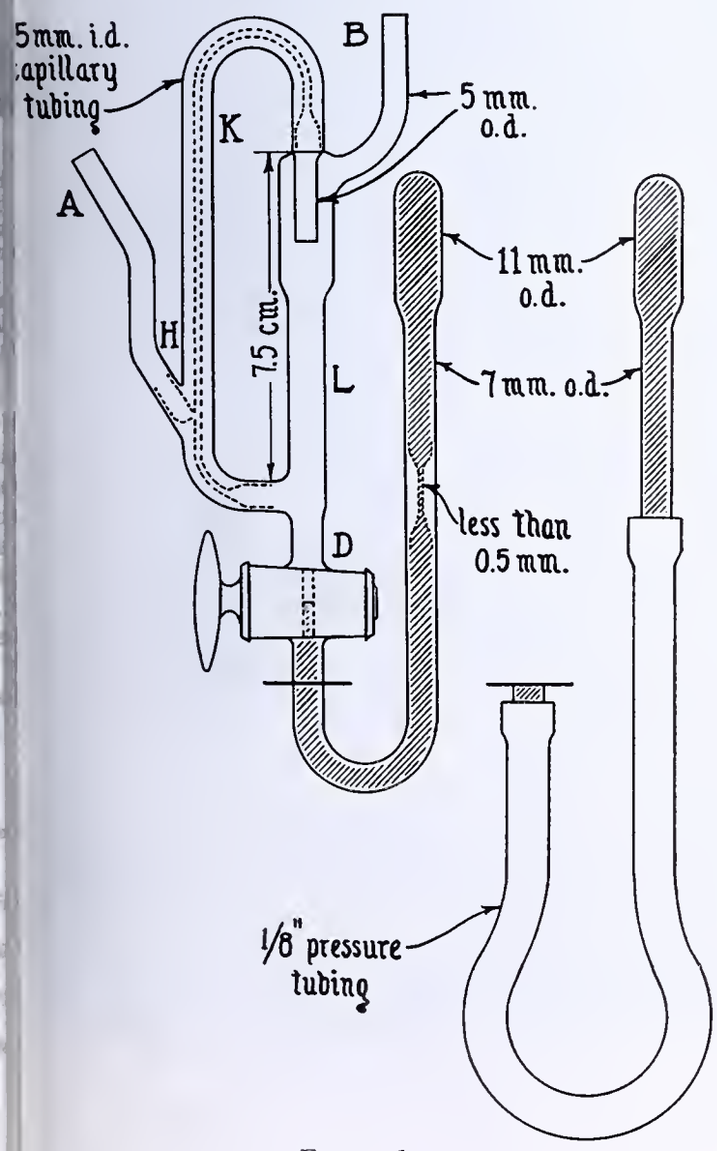

FIGURE 1

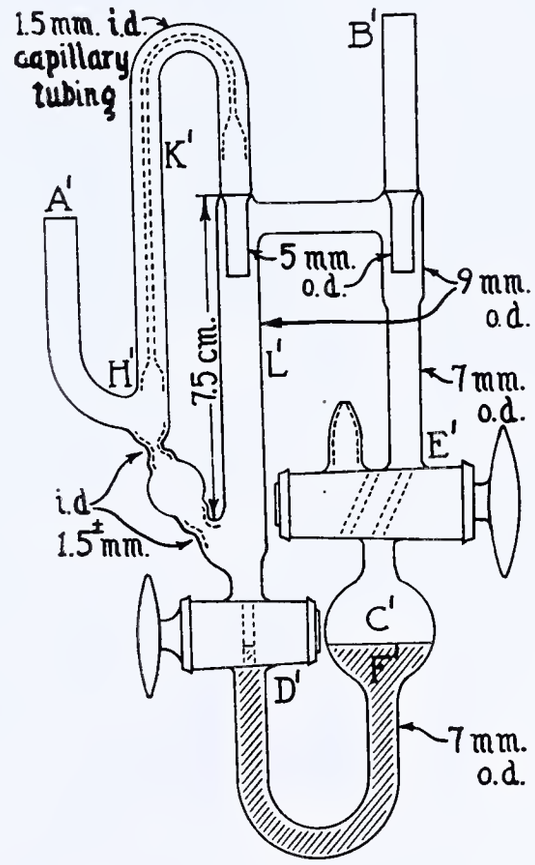

FIGURE 2

before the pump is shut off, the apparatus is rotated clockwise, stopcock *D* is opened, and the mercury is allowed to flow back into the manometer.

The apparatus can be constructed without a stopcock and the regulation controlled by the rotation of the apparatus held in the buret clamp. In this case it is best to evacuate with the regulator rotated to a nearly horizontal position. When the desired vacuum is approached, the apparatus is rotated anticlockwise to form the 1- to 2-mm. mercury seal circulating in *KL*.

A flexible manometer head, attached just below stopcock *D*, as shown, obviates the use of a rotating clamp and can be used when a rigid apparatus is desired. The flexible manometer head is simply lowered at the close of the operation, the stopcock is opened, and the mercury is allowed to return to the bulb before shutting off the pump. The stopcock can also be omitted in this form, if desired, but the circulation of the mercury in *KL* is not so uniform.

Another modification is shown in Figure 2.

The manometer is replaced by a bulb, *C'* which is controllable by the oblique three-way stopcock, *E'*. The circulation of mercury in *K'L'* is the same as above described, but the manipulation of the mercury in *C'* requires considerable care. The regulator is connected as described above, with both stopcocks open and the air in *C'* at atmospheric pressure. Before starting the pump, both stopcocks are closed. When the desired vacuum is approached, stopcock *D'* is opened and mercury is allowed to approach *H'* as before.

To lower the pressure, the air in reservoir *C'* must be evacuated by the careful manipulation of stopcock *E'*. Unless considerable caution is exercised, the momentary increase in pressure in the regulator arms, *K'* and *L'*, will force mercury through *A'* into the system. When the pressure in *C'* is the same as that throughout the regulator, stopcock *D'* is carefully opened. When

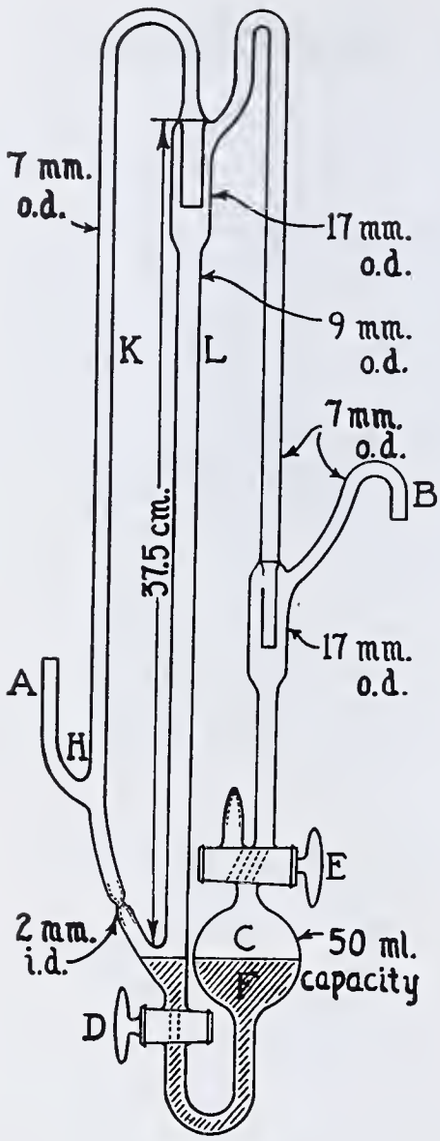

FIGURE 3

the level in K' and L' has fallen sufficiently, D' is again closed, and the air is withdrawn from the system until equalization takes place at a lower pressure.

If it is desired to raise the pressure, air must first be allowed to enter the system so that the mercury will not back into the system through A'. Stopcock D' is then opened and the mercury is allowed to rise higher in tubes K' and L'.

To end the operation, the procedure is much the same as that described above, being careful that the pressure in C' is the same as that of the other portion of the regulator. Then the mercury is allowed to fall from tubes K' and L' altogether, and assume a position of rest in the lower part of the regulator. The stopcocks are now shut, to avoid splashing arising from any fortuitous change in pressure when shutting off the pump.

If it is desired to regulate the pressure within narrow limits, especially in the range of 1 to 10 mm., a larger size (Figure 3) can used which is filled with n-butyl phthalate instead of mercu The phthalate may be colored with Sudan III if desired. the phthalate type the inlet tube in the trap above E has vent close to the ring seal. This allows the regulator to fu tion, even though phthalate may have been carried o accidentally from the upper trap on L.

Butyl phthalate may also be used in place of mercury the types described above having one stopcock. In these t dimensions shown to the left in Figure 3 may be used and suitable manometer, either fixed or flexible, attached j below stopcock D. The type with the flexible manomet is much easier to operate than that shown in Figure 3 wi two stopcocks.

The proper functioning is dependent on a more or le constant exhaust system. Nitrobenzene was distilled variously reduced pressures and the resulting curve agre with that derived from data in the International Critic Tables.

Of the three forms shown, the second and third can fused to other glass parts of the complete apparatus, if a glass construction is desired, while the first must be connect by pressure tubing to allow for the rotation of the regulat All forms function satisfactorily, but in the third style t control of the mercury by the pressure in the bulb C' requir some care and experience.

Of the two sizes, the mercury one is more compact, t total range is higher, and the manometer fluid is not su ceptible to the casual entrance of vapors, while in the phtha ate type the adjustment can be regulated within narrow limits.

Literature Cited

(1) Bertrand, *Bull. soc. chim.*, (3) **29**, 776–8 (1903).
(2) Godefroy, *Ann. chim. phys.*, (6) **1**, 138–44 (1884).
(3) Reiff, *Z. angew. Chem.*, **22**, 1360 (1909).

RECEIVED May 6, 1937. Contribution 98 from the Department of Biolo and Public Health, Massachusetts Institute of Technology.

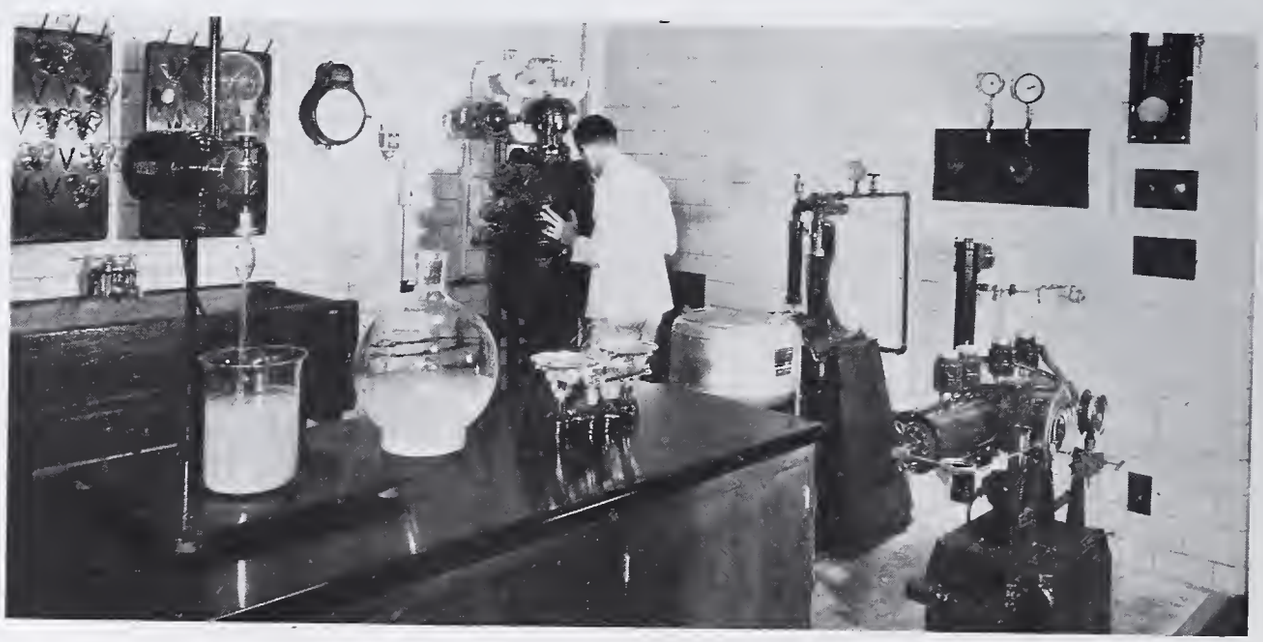

IN THIS ORGANIC RESEARCH DEVELOPMENT LABORATORY SMALL-SCALE LABORATORY PROCESSES ARE STUDIED BEFORE A PRODUCT IS RELEASED FOR FACTORY PRODUCTION. LILLY RESEARCH LABORATORIES, INDIANAPOLIS, IND.

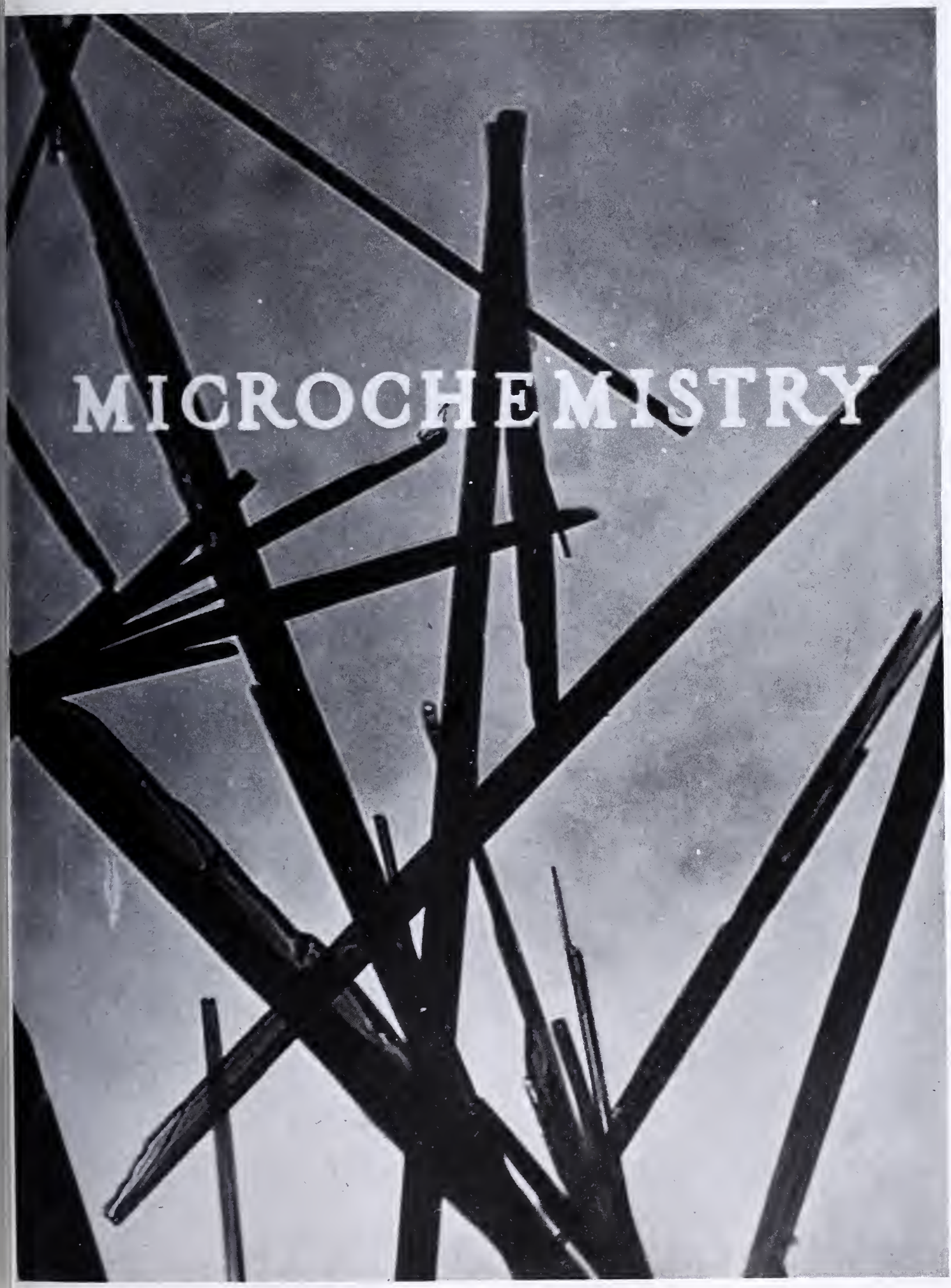

Courtesy, J. T. Bryant and J. R. Rachele

Quinhydrone by Oxidation of Hydroquinone

Separation and Determination of Impurities in Lead

I. Tin

BEVERLY L. CLARKE, LELAND A. WOOTEN, AND J. D. STRUTHERS
Bell Telephone Laboratories, New York, N. Y.

THE accurate determination of commonly occurring impurities in lead has been difficult because of the prob-ms involved in effecting a quantitative separation of the npurities from the lead. Certain impurities, such as bis-uth, copper, and silver, can be rapidly and efficiently sepa-ated by "internal" electrolysis (*1*), but metals less noble an lead are not susceptible to this method of attack. The eparation of lead as sulfate cannot be employed for accurate ork because of the notably strong tendency of lead sulfate adsorb other metal ions. Moreover, the nitric acid solu-ion of the sample, which is usually employed for lead, is en-irely unsuitable when the objective is the determination of mall quantities of tin, arsenic, and antimony.

In the first part of this paper an apparatus is described in hich the solution of a lead sample in hydrochloric acid and he separation of the lead from the impurities are accom-lished simultaneously. The second part of the paper de-cribes the application of the method to the separation and etermination of small quantities of tin in lead.

Lead-Solution Apparatus

The apparatus described below was designed to take ad-antage of the very large difference in solubility of lead hloride in hot and cold hydrochloric acid solution (*2*, *4*). All impurities that form soluble chlorides are thus separated rom the lead, which is precipitated as lead chloride in pure rystalline form as rapidly as dissolved. The advantages ained by solution in hydrochloric acid by the method de-cribed are: the high purity of the lead chloride precipitate btained; and the favorable conditions afforded by a hy-lrochloric acid solution for the subsequent determination f such impurities as tin, arsenic, and antimony.

The apparatus, details of which are shown in Figures 1 and 2, consists of the following parts:

The solution flask, *A*, in which the solution of the sample is effected.

The lead chloride trap, *B*, in which precipitation of the lead chloride occurs, thereby separating the lead from the other metals present in the solution. The trap is equipped with a sealed-in cooling coil through which ice-cold water is continuously circulated. The solution from flask *A*, nearly saturated with lead chloride at approximately 100° C., is thus cooled on entering the trap, with the result that lead chloride crystallizes out. A filter pad, carried by a perforated glass plate sealed inside the trap, retains the lead chloride crystals in the trap but permits the liquid to pass through.

Air lift and connecting crosspiece, *C*. The air lift is connected to the low-pressure air supply and a slow, regular stream of air is admitted at *D*. By means of this air, the solution passing through the lead chloride trap, *B*, is pumped back into the solution flask, *A*, and is thus made available for effecting further solution of the sample.

Condenser and trap, *E*. The hot vapors from the solution flask *A* are condensed by the condenser and returned to the flask, thus keeping the volume of the solution constant. Any volatile chlorides not returned by the condenser are caught in the trap which contains dilute hydrochloric acid.

Heater. Since the temperature of the solution in flask *A* must be maintained at 90° to 100° C., it is essential to use a heater equipped with a heat-output control. Cenco electric flask heaters with rheostat control have been found very satisfactory for this purpose.

The apparatus is made of "E. J." Pyrex glass. All connections are made by means of standard interchangeable ground-glass joints.

PROCEDURE FOR SOLUTION OF THE SAMPLE. The lead sample should be reduced to coarse filings or turnings of a particle size of approximately 10 mesh or larger. Material of a smaller particle size, owing to the larger surface area presented, will cause a more rapid rate of solution. As a consequence the solution in the flask, *A*, may become saturated with lead chloride; if this occurs the tube leading from *A* to *B* (Figure 1) may become clogged with crystals of lead chloride. Within limits, this difficulty can be obviated by increasing the rate of circulation proportionately to the increase in rate of solution of the sample. The reagents used are hydrochloric acid, 1 to 3; hydrochloric acid, 5 per cent by volume; concentrated nitric acid, and paper-pulp suspension.

1. In effecting the solution of the sample, the apparatus is assembled as shown in Figure 1 and is supported by clamps and stands.

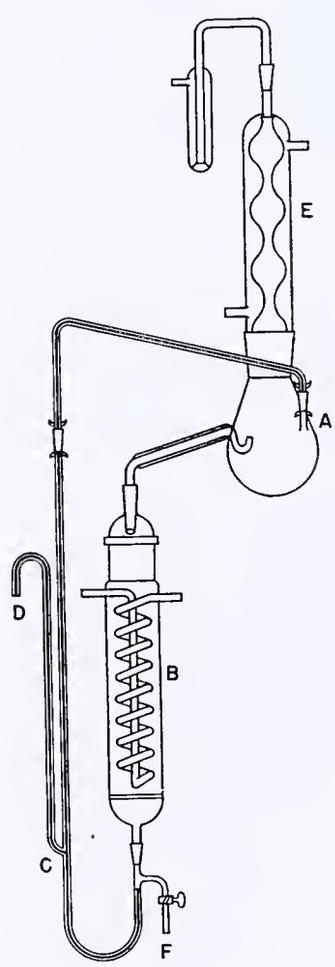

FIGURE 1. DIAGRAM OF LEAD-SOLUTION APPARATUS

2. Form a thin filter pad in the lead chloride trap by pouring in some paper-pulp suspension and allowing the water to drain off. Connect the trap to the air lift, and then fill the trap with sufficient 1 to 3 hydrochloric acid to cover the cooling coil. Connect the solution flask to the trap and then place in the flask 50 grams of the sample being analyzed for impurities. Add 1 to 3 hydrochloric acid until the level of the solution is slightly above that of the siphoning arm; then add 10 ml. of nitric acid. Fit the flask with the condenser and trap which should be half-filled with 5 per cent hydrochloric acid. Connect the air lift and flask by means of the crosspiece; to prevent the crosspiece from being lifted by the air pressure, it should be fastened by means of rubber bands to the air lift and also to the flask.

3. When the apparatus has been thus assembled, pass a stream of cold water through the cooling coil in the trap and through the condenser. To obtain as low a temperature as possible in the trap, the water before entering the coil should be passed through a

copper coil placed in an ice bath. To facilitate ease of operation, the water passing from the trap can be used as the cooling water in the condenser. Connect the air lift to the low-pressure air supply and pass in a slow stream of air. This air breaks the solution from the trap into droplets and carries them over into the solution flask. Regulate the air pressure so as to give a steady flow. (The rate of circulation must be so adjusted that the solution in flask *A* never reaches saturation with respect to lead chloride.) As the solution in the trap is carried into the flask, that in the flask is siphoned over into the trap, thus effecting a continuous circulation of the solution.

4. Place the heater in position and heat the solution in the flask to between 90° and 100° C. Maintain this temperature throughout the process of solution and do not at any time allow the solution to boil. The solution of the alloy requires from 12 to 24 hours and is most conveniently effected by allowing the apparatus to run overnight. By morning, solution of the alloy will have been completed.

5. When the alloy is dissolved, remove the source of heat and continue the circulatory process for at least 1 hour, by which time the temperature of the solution in the flask should not be over 10° C. Remove the trap from the condenser and then shut off the air supply. Wash down the walls of the condenser, open stopcock *F*, and allow the solution in the trap to run into a 1-liter beaker. Remove the flask, *A*, and transfer the solution in it to the same beaker, washing out the flask with water. Close stopcock *F*, and fill the trap to above the cooling coil with hot 5 per cent hydrochloric acid.

Break up the mass of lead chloride crystals by means of a glass rod to permit more efficient washing of the crystals. Continue passing ice-cold water through the coil. When the solution in the trap is cooled to at least 10° C., run it into the beaker containing the solution from the trap and flask. Repeat once more the washing of the lead chloride with hot 5 per cent hydrochloric acid. Wash out any liquid remaining in the air lift and add it to the solution in the liter beaker. Add also the solution in the condensed trap.

Reserve the combined solutions for the determination of impurities.

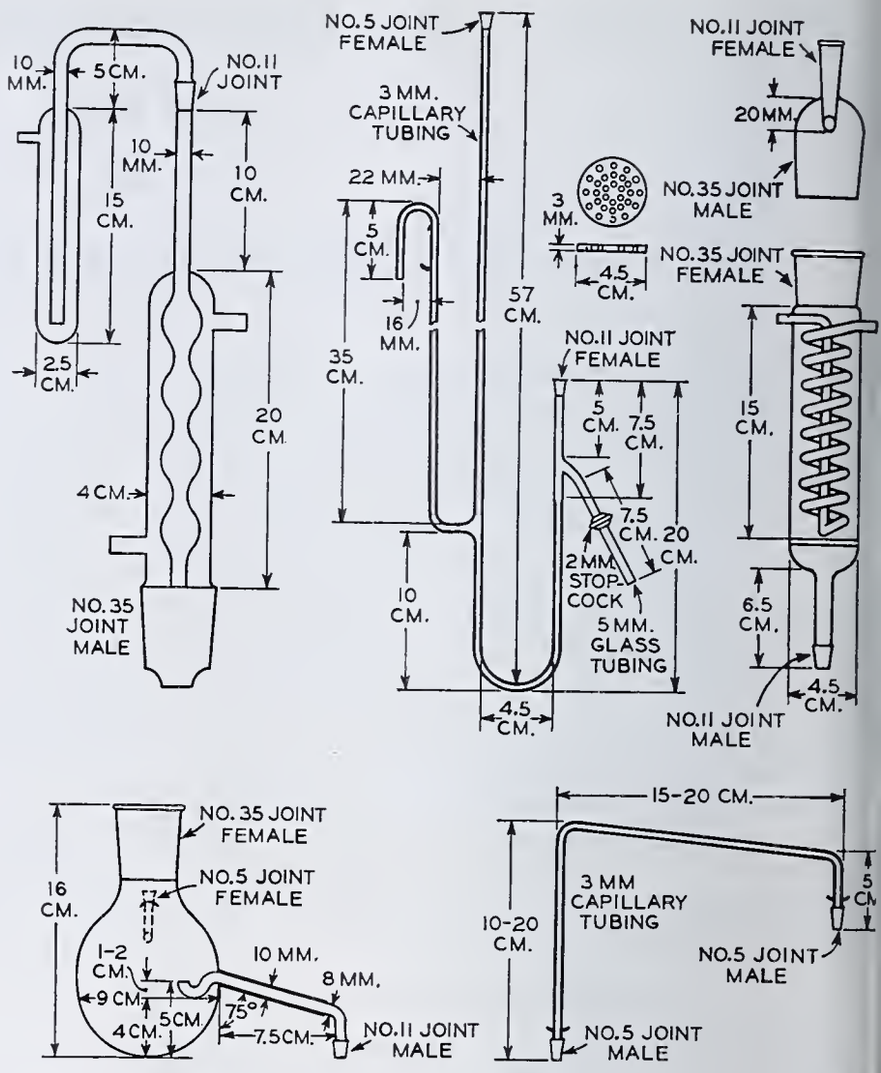

FIGURE 2. DETAILS OF LEAD-SOLUTION APPARATUS

Separation and Determination of Tin

The sample is dissolved in hydrochloric acid in the lead-solution apparatus as described above. Ferric chloride is added to the solution obtained from the apparatus and the tin is co-precipitated with the iron by the addition of ammonium hydroxide. The precipitated hydroxides are dissolved in hydrochloric acid and the tin is determined iodometrically after reduction with lead (*3*).

The apparatus consists of the lead solution apparatus and the tin-reduction apparatus (*3*).

The reagents used are (1) hydrochloric acid, 1 to 3; (2) concentrated nitric acid; (3) hydrochloric acid, 10 per cent by volume; (4) ferric chloride solution, 10 ml. containing 100 mg. of iron; (5) superoxol; (6) concentrated ammonium hydroxide; (7) 1 per cent aqueous solution of ammonium chloride; (8) ammonium hydroxide, 1 to 3; (9) concentrated sulfuric acid; (10) concentrated hydrochloric acid; (11) C. P. sodium chloride; (12) granular test lead; (13) 1 per cent aqueous solution of starch; (14) 10 per cent aqueous solution of potassium iodide; (15) 0.01 *N* iodine solution; and (16) standard tin solution, 0.4000 gram per liter.

STANDARDIZATION OF IODINE SOLUTION. The iodine solution is standardized against pure tin as follows:

Transfer a volume of a standard tin solution equivalent to 10 mg. of tin to a 500-ml. wide-mouthed Erlenmeyer flask. Add 75 ml. of hydrochloric acid and dilute to 300 ml. with water. Ad 5 grams of test lead and 20 grams of sodium chloride. Place th flask on the hot plate. Insert the stopper carrying the air con denser, etc., and pass a stream of carbon dioxide through th apparatus.

Heat to boiling and boil gently for 1 hour. Cool in ice water regulating the current of carbon dioxide so as to prevent bac pressure. When the solution has cooled to at least 10° C., re move the glass plug in the stopper and immediately add, by mean of a pipet, 5 ml. of potassium iodide solution and 5 ml. of starc solution. Insert the tip of the buret containing the iodine solu tion and titrate to the first permanent shade of blue.

Deduct the volume of iodine solution required for a blank deter mination on the reagents.

$$\text{Tin equivalent per ml.} = \frac{\text{weight of tin taken}}{\text{ml. of iodine solution}}$$

PROCEDURE. 1. Dissolve 50 grams of the lead sample in th lead-solution apparatus as described above. Transfer the solu tion and washings to a 1-liter beaker.

2. To the solution in the beaker add 20 ml. of ferric chlorid solution and a few drops of superoxol to ensure oxidation of th iron. Boil gently for a few minutes to remove the excess super oxol. Cool to between 70° and 80° C. Add ammonium hy droxide until the precipitate of ferric hydroxide no longer redis solves on stirring, and then add 10 ml. in excess. Boil for 1 o 2 minutes, allow to settle, and then filter on a No. 41 Whatma paper. Wash with hot ammonium chloride solution.

3. Dissolve the precipitate on the filter paper in 1 to 3 hydro chloric acid, collecting the solution in the beaker in which the firs precipitation was made. Dilute to 150 to 200 ml. Add 1 to ammonium hydroxide dropwise until all of the ferric hydroxid but little or none of the lead hydroxide is precipitated. (Th beginning of the precipitation of lead hydroxide is shown by th appearance of a white cloudiness in the solution. The additio of ammonium hydroxide should be stopped before this point i reached.) Boil for 1 minute, filter on the paper used to collec

he first precipitate, and wash with hot ammonium chloride solu-
ion.

4. Dissolve the precipitate in a small quantity of 1 to 3 hydro-
hloric acid, collecting the solution in the beaker in which the
recipitation was made. Reserve the solution. Transfer the
lter paper to a 500-ml. wide-mouthed Erlenmeyer flask, and
dd 5 ml. of sulfuric acid and sufficient nitric acid to destroy all
rganic matter. Evaporate to fumes of sulfur trioxide, and con-
inue heating until a clear solution is obtained, adding more nitric
cid if necessary. Cool. Add 10 ml. of water and again evapo-
ate to fumes. Cool.

5. Transfer the hydrochloric acid solution obtained in Para-
raph 4 to the residue in the 500-ml. Erlenmeyer flask. Add 75
ml. of hydrochloric acid and dilute to 300 ml. with water. Add 20
rams of sodium chloride and 5 grams of test lead. Insert the
topper carrying the air condenser, etc., and proceed with the
eduction and titration of the tin exactly as described above under
Standardization of Iodine Solution."

Deduct the volume of iodine solution required for a blank deter-
ination on the reagents.

$$\frac{\text{Ml. of } I_2 \text{ solution} \times \text{Sn equivalent} \times 100}{\text{sample weight}} = \%\ \text{tin}$$

Experimental Data. Fifty-gram samples of a commer-
ial lead were placed in the solution flask. Known amounts
f tin in hydrochloric acid solution were added and the sam-
le was then treated as recorded in the procedure. The
ead used in these experiments had the following approximate
ercentage composition:

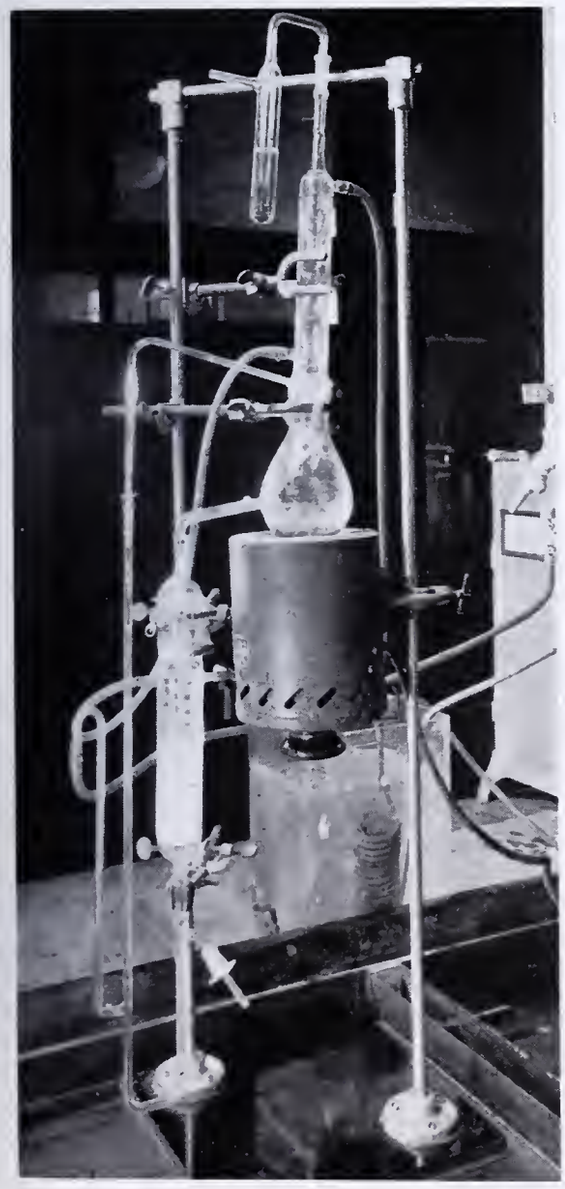

Figure 3. Lead-Solution Apparatus in Operation

Copper	0.06	Antimony	0.002
Bismuth	0.015	Arsenic	<0.001
Silver	0.006	Tin	0.0002
Iron	<0.001		

The tin solutions were prepared from Kahlbaum's "for analysis" tin. The results obtained are shown in Table I.

Table I. Determination of Tin in the Presence of Lead and Common Impurities of Lead

Lead Present	Tin Present	Tin[a] Found	Error	Average Deviation from Mean
Grams	*Mg.*	*Mg.*	*Mg.*	*Mg.*
50	1.00	0.94	−0.06	
50	1.00	0.97	−0.03	
50	1.00	0.96	−0.04	±0.03
50	1.00	0.98	−0.02	
50	1.00	1.02	+0.02	
50	1.00	1.02	+0.02	
		Av. 0.98	−0.02	
50	4.00	4.00	0.00	
50	4.00	4.00	0.00	±0.02
50	4.00	4.05	+0.05	
		Av. 4.02	+0.02	
50	5.00	4.95	−0.05	
50	5.00	4.96	−0.04	
50	5.00	5.00	0.00	
50	5.00	5.06	+0.06	
50	5.00	5.00	0.00	±0.03
50	5.00	5.03	+0.03	
50	5.00	4.94	−0.06	
50	5.00	5.02	+0.02	
50	5.00	4.97	−0.03	
		Av. 4.99	−0.01	
50	10.00	9.79	−0.21	
50	10.00	9.85	−0.15	
50	10.00	9.84	−0.16	
50	10.00	10.12	+0.12	±0.13
50	10.00	10.12	+0.12	
50	10.00	10.06	+0.06	
50	10.00	10.10	+0.10	
		Av. 9.98	−0.02	
20	20.00	20.00	0.00	
20	20.00	20.11	+0.11	±0.05
20	20.00	20.02	+0.02	
20	20.00	20.09	+0.09	
		Av. 20.05	+0.05	

[a] Results corrected for blank run on lead used.

Two samples of lead containing tin were also analyzed by the above method. The results are shown in Table II.

Table II. Precision of Method Applied to Typical Samples

Sample Designation	Tin	Deviation from Mean
	%	%
Commercial lead containing tin, Sample A	0.0026	0.0000
	0.0026	0.0000
	0.0025	−0.0001
	0.0026	0.0000
Av.	0.0026	0.0000
Commercial lead containing tin, Sample B	0.0056	+0.0001
	0.0056	+0.0001
	0.0053	−0.0002
	0.0054	−0.0001
Av.	0.0055	±0.0001

The purity of the lead chloride precipitate obtained in these experiments was determined by means of the spectrograph. The presence of tin was not detected in any of the samples analyzed. Traces of copper and iron were found, but neither was present in a significant quantity. Silver also was found present, as would be expected from the insolubility of its chloride.

In a future paper quantitative data on the separation of arsenic and antimony from lead will be presented.

Literature Cited

(1) Clarke, B. L., Wooten, L. A., and Luke, C. L., Ind. Eng. Chem., Anal. Ed., **8**, 411 (1936).
(2) Evans, B. S., *Analyst*, **52**, 565 (1927).
(3) Scherrer, J. A., *Bur. Standards J. Research*, **8**, 309 (1932).
(4) Seidell, A., "Solubilities of Inorganic and Organic Compounds," 2nd ed., p. 354, New York, D. Van Nostrand Co., 1919.

Received April 27, 1937. Presented before the Division of Physical and Inorganic Chemistry at the 93rd Meeting of the American Chemical Society, Chapel Hill, N. C., April 12 to 15, 1937.

A Semimicro Qualitative Test for the Nitro Group in Organic Compounds

W. M. HEARON AND R. G. GUSTAVSON
University of Denver, Denver, Colo.

SEVERAL qualitative tests for the nitro group have been reported.

Vortmann (*18*) suggests three: reduction to amino group and subsequent indentification, formation of chloropicrin which may be recognized by its odor, and the red or yellow coloration produced by boiling solutions of alkaline hydroxides. Mulliken and Barker (*13*) have shown these to be inadequate and present two additional tests. The first involves the reduction with zinc and alcohol to a substituted hydroxylamine which in turn is identified by its reducing action on ammoniacal silver nitrate. The second test utilizes the oxidizing power of the nitro group to change "aniline oil" (equal parts of *o*- and *p*-toluidine, and aniline) to the highly colored magenta red. Mulliken does not quote this last test in his "Identification of Pure Organic Compounds" (*12*).

Janovsky (*9*) found that aromatic dinitro compounds in acetone gave colorations with aqueous potassium hydroxide. This work was extended and its limitations observed by Bitto (*3*), Reitzenstein and Stamm (*15*), and Rudolph (*17*). Bost and Nicholson (*5*) have confirmed this test and find that, in general, mononitro aromatic compounds give no colorations, dinitro compounds give a purple, and trinitro compounds produce a blood red coloration. The presence of amino or hydroxyl groups in the nucleus, however, interfere. Konowalow (*11*) tested for primary and secondary nitro groups by treating their sodium salts with ferric chloride and extracting the colors in suitable organic solvents. Dimethylaniline (*19*) gives colors with many nitro compounds. Anhydrous aluminum bromide in benzene (*14*) has also been reported to give a red color with aromatic nitro compounds. Rosenthaler (*16*) states that nitromethane when treated with ammonium hydroxide and vanillin and heated gives a red color which disappears on cooling. If sodium nitroprusside is used in place of vanillin, he states that an indigo blue coloring appears, which gradually changes to green and then to yellow.

The higher homologs were found to give a brick red coloration. Bose (*4*) has found that all except mononitro aromatic compounds will split off potassium nitrite with strong potassium hydroxide which in turn is identified with Griess-Ilosvay's reagent. Kamm (*10*) has described a test which involves the reduction of the group to various colored compounds by means of sodium amalgam and alcohol.

The presented test is dependent upon the oxidation of a suspension of ferrous hydroxide by the nitro compound. Ferrous hydroxide has been used many times in the past for preparing amino compounds from nitro compounds For example, (*m*-aminophenyl)-gloxylic acid (*6*), *o*-aminophenylpropiolic acid (*1*), *o*-aminobenzaldehyde (*2*), and *o*-aminocinnamic acid (*7*) have been prepared by the reduction of the corresponding nitro compounds by means of ferrous hydroxide. Jacobs and Heidelberger (*8*) have prepared a number of amino acids, amides, and ureas by reducing the nitro compound with ferrous hydroxide and ammonia. The authors have been unable, however, to find any reference to the use of this reagent in a qualitative test.

Procedure

Two solutions are required.

1. IRON SOLUTION. A 500-ml. portion of distilled water is boiled for 15 minutes to remove any dissolved air. After cooling, 25 grams of ferrous ammonium sulfate and 2 ml. of concentrated sulfuric acid are added. An iron nail may be added to retard oxidation by the air.
2. BASE SOLUTION. 30 grams of stick potassium hydroxide are dissolved in 30 ml. of distilled water and then added to 200 ml. of 95 per cent ethyl alcohol.

A 0.7-ml. portion of the iron solution is pipetted into a 4-ml. test tube, and a small quantity (10 mg.) of the finely powdered unknown is added. Then 0.5 ml. of the base solution is added and a stream of natural gas (or any inert gas) is passed through the tube to remove any air. The tube is quickly stoppered and shaken. A positive test is indicated by the formation of a red brown to brown precipitate of ferric hydroxide. Negative tests in many cases gave a very light green precipitate. However, in some cases the precipitate became dark due to slight oxidation.

Discussion and Conclusion

In the aromatic series, forty-five nitro compounds were tested and all gave a positive test in less than 30 seconds. Unfortunately nitromethane was the only representative of the aliphatic series available, and it gave a positive test only after a minute. The speed with which the iron is oxidized was seen to be a function of the solubility of the nitro compound. Thus *p*-nitrobenzoic acid gave a positive result almost immediately, while nitronaphthalene required 25 seconds. Obviously any organic oxidizing agent powerful enough will oxidize the ferrous hydroxide, and it is seen that nitroso compounds, aliphatic nitrates and nitrites, quinones and hydroxylamine will also show a positive test. As in any color test, highly colored compounds cannot be successfully

TABLE I. RESULTS OF TESTS

Compound	Color of Ppt.	Time
		Sec.
Compounds Containing the Nitro Group		
Nitromethane	Brown	60
Mononitrobenzene	Brown	2
m-Dinitrohenzene	Brown	10
Nitronaphthalene	Brown	25
p-Nitrobenzoic acid	Brown	2
p-Nitrophenylacetic acid	Brown	2
p-Nitroacetanilide	Brown	10
2,4-Dinitrophenol	Brown	3
m-Nitroaniline	Brown	3
o-Nitroanisole	Brown	2
m-Nitrohenzaldehyde	Brown	1
p-Nitrobenzylcyanide	Brown	5
m-Nitrohenzhydrazide	Brown	5
m-Nitrophenylhydrazine	Brown	2
2,4,6-Trinitro-1,3-dimethyl-5-*tert*-hutylbenzene	Brown	25
Compounds Not Containing the Nitro Group		
		Min.
Ethyl alcohol	Light green	5
n-Amyl alcohol	Light green	5
Benzaldehyde	Light green	5
Acetone	Light green	5
Benzoic acid	Light green	5
Benzoin	Dark green	5
Benzyl	Dark green	5
Benzidine	Gray green	5
Dimethylaniline	Light green	5
Benzaldehyde-phenylhydrazone	Light green	5
Glucosazone	Yellow green	5
Acetamide	Light green	5
		Sec.
Ethyl nitrite	Brown	5
Ethyl nitrate	Brown	30
1,4-Naphthoquinone	Dark hrown	30
Benzoquinone	Brown	5
		Min.
Benzoyl peroxide	Light green	5
		Sec.
o-Nitroso-*m*-cresol	Brown	3
Tetrachloroquinone	Brown	7
		Min.
Anthraquinone	Red solution	5
Dimethyl sulfate	Light green	5
Resorcinol	Light green	5
Diphenyl sulfone	Light green	5
Sodium benzene sulfonate	Light green	5
Triphenyl phosphate	Light green	5
		Sec.
Hydroxylamine hydrochloride	Brown	2
		Min.
Benzophenone	Light green	5

sted. Seventy-five compounds not containing the nitro oup were tested and were all found to be negative with the ceptions noted above.

The test as outlined, when used in correlation with other acpted tests, will be a decided aid in the detection of the nitro oup in organic compounds.

Literature Cited

1) Baeyer and Bloem, *Ber.*, **15**, 2147 (1882).
2) Bamberger and Demuth, *Ibid.*, **34**, 1330 (1901).
3) Bitto, *Ann.*, **269**, 377 (1892).
4) Bose, *Analyst*, **56**, 504 (1931).
5) Bost and Nicholson, Ind. Eng. Chem., Anal. Ed., **7**, 190 (1935).
6) Claison and Thompson, *Ber.*, **12**, 1946 (1879).
7) Gabriel, *Ibid.*, **15**, 2294 (1882).
8) Jacobs and Heidelberger, *J. Am. Chem. Soc.*, **39**, 1435 (1917).
(9) Janovsky, *Ber.*, **24**, 971 (1891).
(10) Kamm, Oliver, "Qualitative Organic Analysis," p. 161, New York, John Wiley & Sons, 1932.
(11) Konowalow, *Ber.*, **28**, 1850 (1895).
(12) Mulliken, S. P., "Method for Identification of Pure Organic Compounds," Vol. 2, p. 32, New York, John Wiley & Sons, 1916.
(13) Mulliken and Barker, *Am. Chem. J.*, **21**, 271 (1899).
(14) Olivier, *Rec. trav. chim.*, **37**, 241–4 (1918).
(15) Reitzenstein and Stamm, *J. prakt. Chem.*, **81**, 167 (1910).
(16) Rosenthaler, L., "Der Nachweis organischer Verbindungen," p. 68, Stuttgart, Verlag von Ferdinand Enke, 1923.
(17) Rudolph, *Z. anal. Chem.*, **60**, 239 (1921).
(18) Vortmann, "Anleitung zur chemisches Analyse organischer Stoffe,"
(19) Walter, *Z. Farbenind.*, **10**, 49 (1911).

Received April 19, 1937.

An Improved Reaction Microapparatus

D. S. BINNINGTON

Grain Research Laboratory, Board of Grain Commissioners for Canada, Winnipeg, Canada

NUMEROUS micromethods involve the evolution d quantitative absorption various gases and vapors. e usual setup for this type of alysis is frequently cumberme and inefficient because of e use of rubber stoppers and nnections. The all-glass apratus described here obviates ese difficulties, is very comact, and titrations may be rried out directly in the apratus. It was originally degned for the microdetermination of bromine by evolution d absorption in potassium dide solution, but may be nployed without modification r a wide range of analyses.

Details of construction are own in Figure 1, Pyrex glass d standard taper ground ints being used throughout. he use of the apparatus is illusated by the technic employed carrying out bromine deterinations by a modification of e Yates (*2*) method developed this laboratory.

The sample, equivalent to not ore than 500 gamma of broine, is transferred to the reacon flask with 7 cc. of water, and 5 cc. of concentrated sulfuric id are added through the tap nnel over a period of 10 minutes, oling the flask in ice water durg this addition. This is folwed by 4 cc. of chromic acid lution (20 grams of CrO_3, 40 cc. concentrated sulfuric acid, and 0 cc. of water). The inlet to e tap funnel is then connected a wash bottle containing 20 per nt potassium hydroxide solution. The main absorber is charged with 3 cc. of 10 per cent potassium iodide solution containing 3 to 4 drops of 0.5 per cent starch solution prepared according to the method of Nichols (*1*) and the secondary absorbing trap with 1 cc. of the above potassium iodide solution. Air is then aspirated through the system at a rate of approximately one bubble per second, for 5 hours. At the end of this period the absorption unit is disconnected, the upper stopper is loosened, and the contents of the trap are blown into the main absorber which is then washed with two successive 1-cc. portions of the 10 per cent potassium iodide solution. Titration is carried out in the main absorber with 0.001 *N* sodium thiosulfate.

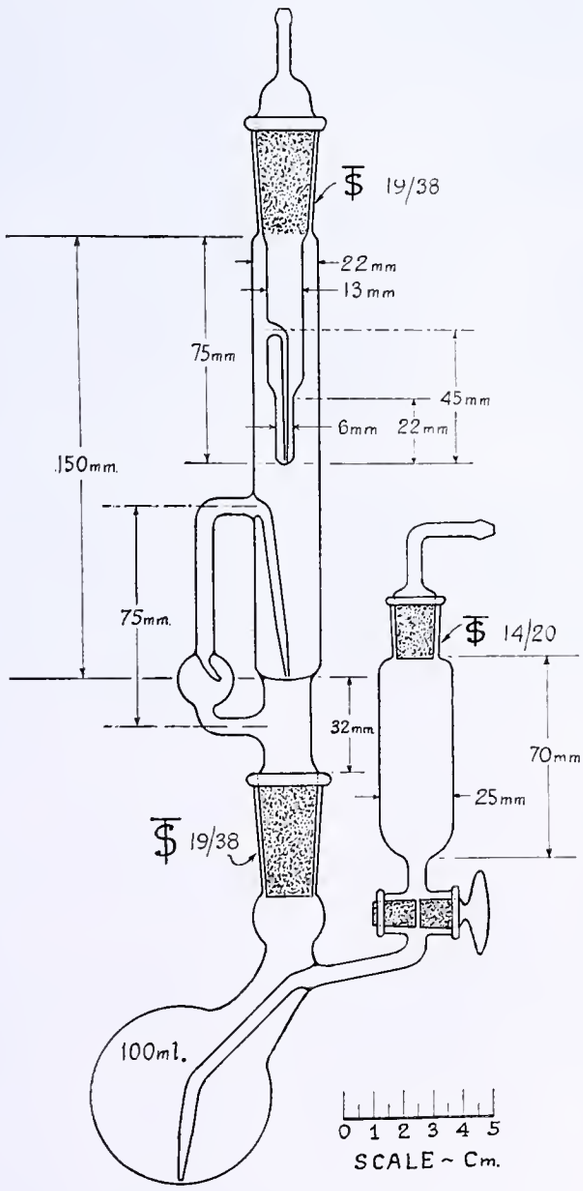

Figure 1. Diagram of Apparatus

Prior to the development of this reaction vessel, the percentage recovery of bromine was in the order of 95 to 96 per cent, while with its use the recovery ranges between 98 and 100 per cent with greatly reduced variability between replicates.

Literature Cited

(1) Nichols, M. S., Ind. Eng. Chem., Anal. Ed., 1, 215 (1929).
(2) Yates, E. D., *Biochem. J.*, **27**, 1762 (1933).

Received April 14, 1937. Contribution from the Grain Research Laboratory, Board of Grain Commissioners, Winnipeg, Manitoba, with financial assistance from the National Research Council of Canada. Published as paper No. 119 of the Associate Committee on Grain Research, National Research Council of Canada and Dominion Department of Agriculture.

Operation of Analytical Microbalances Highly Sensitive to Temperature Changes

FRITZ BREUER,[1] Department of Chemistry, Pennsylvania State College, State College, Pa.

THE high degree of sensitivity attained by most analytical microbalances is not infrequently impaired by their great temperature sensitivity. Some instruments are more sensitive toward temperature fluctuations than others of the same manufacture, and according to information from an experienced maker of microbalances the causes of this different behavior have not yet been traced definitely.

The precautions which were found necessary to make practical weighings to ±1 gamma with an extremely temperature-sensitive instrument of the long-beam type are reported in this note. They should be of general value if microanalytical weighings have to be carried out under handicap.

Protection of the Balance

PROTECTION FROM OUTSIDE DISTURBANCES. A protective case shields the balance against drafts and heat radiating from the operator. Between weighings the side windows of the balance case are kept open and the smoothly working sash window of the protective case is raised 2 to 3 cm. to permit "acclimatization." Five minutes after the manipulation of weights, etc., all windows are closed and after 5 more minutes the outer (protective) case is opened only long enough to permit starting the balance to swing. During the weighin proper this case is kept closed.

PROTECTION FROM EFFECTS OF MANIPULATIONS IN TH BALANCE CASE. An aluminum sheet separating the bear from the lower part of the balance (pans) was kindly installe by Christian Becker, Inc., New York, and the balance floo was covered with sheet copper to dissipate local heating of th balance floor. By lengthening the rider carrier and releas handles for 20 cm., the inconvenience of counterbalancing th heat radiation of the hand can be omitted.

Manipulation of Weights and Objects to Be Weighed

Ordinary crucible tongs 24 cm. long to which the ivory tipped forceps of the set of analytical weights are attached and another pair of these tongs for boats, weighing flasks, etc. minimize heat radiations from the hands of the operator Pregl's carbon dioxide– and water-absorption tubes are han dled by a wire fork of such length that the hands always re main well outside the balance case.

With this technic it was even possible to use an often-fre quented office as weighing room.

RECEIVED April 9, 1937. Part of a report presented before the Divisio of Physical and Inorganic Chemistry, Symposium on Recent Advances i Microchemical Analysis, at the 89th Meeting of the American Chemic Society, New York, N. Y., April 22 to 26, 1935.

[1] Present address, Ohio State University, Columbus, Ohio.

Modified Micro-Dumas Nitrogen Determination with Readily Available, Air-Free Carbon Dioxide

FRITZ BREUER, Department of Physiology, Ohio State University, Columbus, Ohio

THE success of Pregl's micro-Dumas nitrogen determination depends mainly on procuring carbon dioxide of exceptional purity. Various generators have been described (*1, 2, 4, 7, 8, 10*), among them Poth's apparatus (*8*). This has proved very satisfactory, but it is somewhat fragile and the starting operations are rather involved. Reproducible blanks have been made possible by the modification of Trautz and Niederl (*11*).

Much would be gained, particularly for the laborator that does not specialize in microanalysis, if carbon dioxid of the required degree of purity could be provided with minimum of preparation in an apparatus of simple construc tion. These requirements are fulfilled in Dumas' origin well-known technic. Pregl (*9*), intent upon the gener applicability of his methods, discarded the idea of generatin carbon dioxide from magnesite or sodium bicarbonate, b

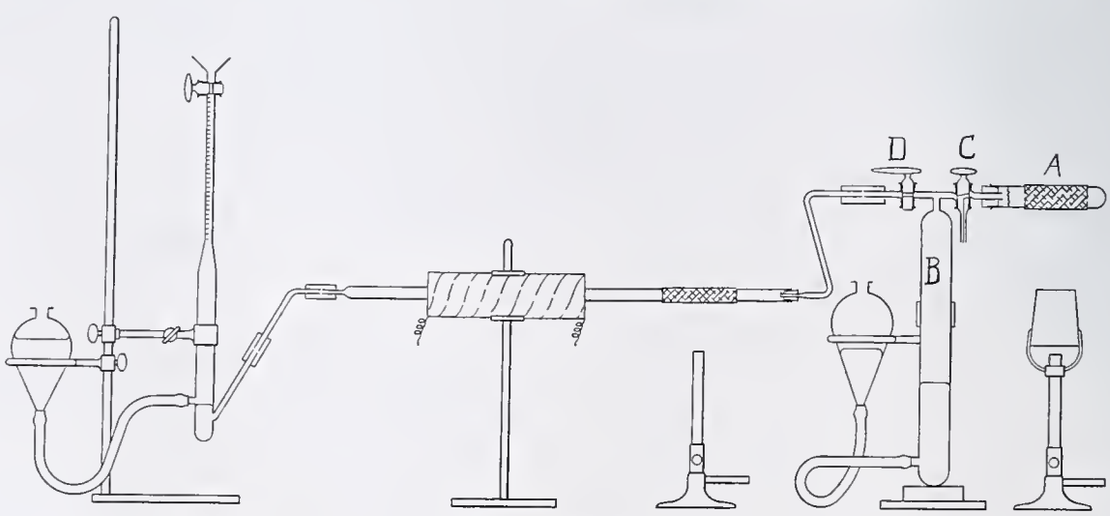

FIGURE 1

ause of the danger of volatilizing part of the sample by the ıot carrier gas in the initial scavenging of the tube. More-ıver, the highly important rate of gas flow could be secured nore safely with the Kipp generator. Dubsky (*3*), Govaert *5*), and Ide (*6*) have successfully applied magnesite to the nicro-Dumas analysis of less volatile material.

The apparatus shown in Figure 1 supplies a well-con-rolled flow of carbon dioxide at room temperature. Its con-truction requires little skill in glass blowing.

A Pyrex test tube, preferably heavy-walled (bomb tubing), *A*, 0 to 15 cm. long is attached by means of a rubber stopper to a ;asometer, such as *B*, of 250- to 300-cc. capacity. A two-way topcock, *C*, permits removal of air from *A*. Cock *D* takes over he functions of regulating the gas flow, the customary stopcock ›etween microazotometer and combustion tube thereby being liminated. Sodium bicarbonate (analytical grade), being enerally available in the laboratory, is used instead of magnesite, f which a special grade (Kahlbaum's) is required. Mercury erves as confining liquid in the gasometer. One charge of sodium ›icarbonate, packed tightly, will serve for seven to eight analyses one day's work).

By gently heating for 2 to 3 minutes the portion of test tube *A* overed with wire gauze, air is expelled through *C*. Gasometer *B* s then filled with carbon dioxide. Water formed in the liberation f carbon dioxide condenses on the mercury surface and does not nterfere with the determination. It is removed through *C* vhen recharging test tube *A*. When first assembling the appara-us and after it has been unused for some time, it is necessary to lush the storage vessel two to three times with carbon dioxide, o remove air adsorbed on the walls. Care should be taken to liminate air pockets from the pressure tubing connecting the asometer and leveling bulb. By evacuation through *C*, traces f air can also be removed.

The combustion proper and the measuring of the nitrogen vol-ıme are carried out according to Pregl's directions (*9*). Since the ;ases in the combustion tube are at a pressure close to atmos-›heric, the mercury level confining the potassium hydroxide olution in the microazotometer should extend only a few milli-neters over the gas inlet tube. When starting the scavenging ›peration, the flame of the movable burner should hit the empty ›ortion of the combustion tube about 1 cm. from the filling. After gas evolution in the nitrometer has ceased, stopcock *D* hould be manipulated slowly and with great care. Results are vell within 0.1 per cent (absolute) of the theoretical value. Ordinarily, no blank determination is necessary. When not in ıse, the gasometer remains filled with mercury, both stopcocks ›eing closed.

The method described in this paper has been in use for ›ome time in this and in another laboratory.

Summary

A simple carbon dioxide generator is described which promptly supplies gas of the required purity. Pregl's appara-tus is further simplified by placing the precision stopcock between combustion tube and generator.

Literature Cited

(1) Allen, C. F. H., and Young, D. M., *Can. J. Research*, **14**, 216 (1936).
(2) Clark, E. P., *J. Assoc. Official Agr. Chem.*, **16**, 575 (1933).
(3) Dubsky, J. V., "Vereinfachte quantitative Mikroelementar-analyse organischer Substanzen," Leipzig, Veit & Co., 1917.
(4) Friedrich, A., *Mikrochemie*, **10**, 355 (1931).
(5) Govaert, F., *Ibid.*, **9**, 338 (1931).
(6) Ide, W. S., Ind. Eng. Chem., Anal. Ed., **8**, 56 (1936).
(7) Lowe, E. W., and Gutmann, W. S., *Ibid.*, **4**, 440 (1932).
(8) Poth, E. G., *Ibid.*, **2**, 250 (1930); **3**, 202 (1931).
(9) Pregl, F., "Quantitative Organic Microanalysis," 2nd ed., pp. 94, 102, Philadelphia, P. Blakiston's Son & Co., 1930.
(10) Rutgers, J. J., *Compt. rend.*, **193**, 51 (1931).
(11) Trautz, O. R., and Niederl, J. B., Ind. Eng. Chem., Anal. Ed., **3**, 151 (1931).

Received April 9, 1937. Presented before the Microchemical Section at the 92nd Meeting of the American Chemical Society, Pittsburgh, Pa., September 7 to 11, 1936. Carried out under a grant of the Rockefeller Foundation administered by F. A. Hartman.

A Macro- or Micro-Gooch Filter

RALPH E. DUNBAR, Iowa State College, Ames, Iowa

A SMALL Gooch funnel can be readily fashioned from two sizes of laboratory glass tubing, as shown, and is particularly convenient for determining halogens by indirect methods (*2*). Other uses, where small precipitates are handled quantitatively, will suggest themselves. It combines the essential features of the usual Gooch crucible, supporting funnel, and connecting rubber tubing, and is prepared and used like any typical Gooch filter.

The smaller size of tubing should be about 6 or 8 mm., to enter readily the openings of ordinary rubber stoppers, and the larger size will depend upon the probable uses of the funnel. A solid, round glass bead will serve as a loose support for the asbestos fibers, which are added in the usual manner.

The prepared funnel can be most conveniently heated in an electric oven or electric or gas micromuffle (*1*). After the combined silver halides are weighed, the funnel may be placed in a heated tube. A slow stream of chlorine passed through the tube displaces the bromine or iodine present.

Literature Cited

(1) Pregl, "Quantitative Organic Microanalysis," 2nd ed., tr. by E. Fyleman, p. 165, Philadelphia, P. Blakiston's Son & Co., 1930.
(2) Treadwell-Hall, "Analytical Chemistry," Vol. II, Quantitative Analysis, 7th ed., p. 299, New York, John Wiley & Sons, 1928.

Received June 10, 1937.

A Manometer for Carbon and Hydrogen Pressure Regulation

WILLIAM H. HAMILL
Fordham University, New York, N. Y.

THE maintenance of correct pressure relations in the micro-determination of carbon and hydrogen is facilitated by the introduction of a simple water manometer between the carbon dioxide absorption tube and the Mariotte flask. The addition of a drop of ink to the water assists in reading; a small bulb precludes the possibility of sucking water into the gas line.

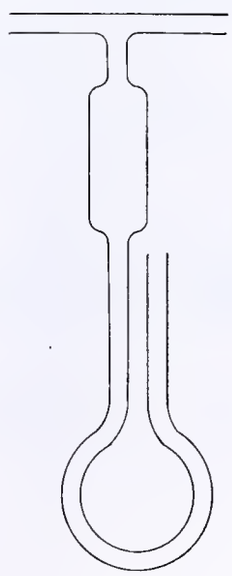

The rate of gas flow may be adjusted in the usual manner or with the temporary assistance of a second manometer at the junction of the combustion tube and the water absorption tube, the pressure regulator and the Mariotte flask being so adjusted as to maintain atmospheric pressure at this junction. The proper difference in water levels is marked on the first manometer and this difference is maintained during subsequent runs.

Received May 19, 1937.

A Microcentrifuge

W. MacNEVIN, Ohio State University, Columbus, Ohio

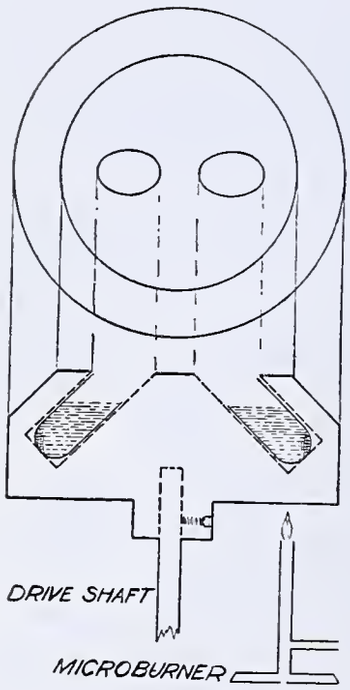

THE advantages of centrifugation over filtration in micro and semimicro operations are well recognized among microchemists. In using the ordinary bucket type of head for centrifuging in semimicro qualitative analysis, the author has found it difficult to keep solutions hot during the operation. The head described below can be kept hot and has other advantages over the bucket type.

The head is similar to that on the so-called "angle" centrifuge (*1*) and consists of a cylindrical aluminum block (diameter, 7.5 cm.) with two or more holes for holding centrifuge tubes, drilled opposite each other and at an angle of about 45° to the horizontal. The head is fastened to a drive shaft operated by electric, hand, or air power. A Cenco stirring motor fastened in an inverted position is convenient for this purpose.

In the hot-water extraction of lead chloride from silver and mercurous chlorides, it is necessary to keep the centrifuge tube and contents hot during the centrifuging process. For this purpose a microburner is suspended just below the aluminum block, which can then be heated to 100° C. in 1 to 2 minutes. It can likewise be cooled rapidly for subsequent use at room temperature. The draft produced by the rotating head does not extinguish the burner.

The maximum speed necessary to throw down quickly any precipitates encountered in the usual schemes of qualitative analysis does not exceed 1200 r. p. m. From experience in this laboratory with aluminum centrifuge heads of the size used here, it is estimated that the maximum rotational speed attainable with the Cenco stirring motor is not more than one-tenth that required to split the block. For this reason it is not necessary to use a device for the protection of the worker.

For heads designed to carry microcentrifuge tubes only, the author has found a large cork sufficiently strong and light enough to be driven at the required speed by the air pressures usually available in a laboratory.

Acknowledgment

Thanks are due to R. P. Schneider of the Department of Industrial Engineering, Ohio State University, for casting the aluminum blocks used and to John Betz, technical assistant to the Department of Chemistry, Ohio State University, for the excellence of his mechanical work in the construction of the apparatus.

Literature Cited

(1) Lundgren, K. T. R., U. S. Patent 1,730,776 (October 8, 1929). Ivan Sorvall, 4141 46th St., Long Island City, N. Y., U. S. representative.

RECEIVED April 12, 1937.

Silver Chloride

Courtesy, A. A. Benedetti-Pichler

ANALYTICAL EDITION

INDUSTRIAL and ENGINEERING CHEMISTRY

Harrison E. Howe, Editor

Quantitative Determination of Aluminum by Precipitation with Urea

HOBART H. WILLARD AND NING KANG TANG, University of Michigan, Ann Arbor, Mich.

Aluminum can be accurately separated from large amounts of calcium, barium, magnesium, manganese, cobalt, nickel, zinc, iron, cadmium, and copper by precipitation as the dense basic succinate by boiling with urea the acid solution containing succinic acid. Hydrolysis of the urea forms ammonia gradually in a homogeneous solution, resulting in a pH of 4.2 to 4.6. Owing to the dense nature of the precipitate, it is easily filtered and washed and shows much less adsorption of other salts than does the precipitate obtained by the usual methods. The basic sulfate precipitated in this way is also dense, but the pH must be 6.5 to 7.5 and separations in certain cases are less satisfactory. The accuracy of separations made by the urea method is far superior to that obtainable by the use of ammonia. This is attributed to a combination of four important factors—a dense precipitate, a slow, uniform increase in pH, a homogeneous solution, and a low final pH.

IN PREVIOUS work (*20*) it was found that upon heating aluminum solutions containing sulfates to which urea had been added, the aluminum was precipitated as basic sulfate in a dense and easily filterable form. This was due to the slow, uniform increase in pH caused by the gradual hydrolysis of the urea. The advantages of this method of precipitation in the separation of aluminum from other metals were indicated: (1) The solution is homogeneous, since no reagents are added during precipitation. (2) The precipitate is much less bulky, thus reducing the error due to adsorption and facilitating filtration and washing. (3) The pH of the solution is easily controlled and can never be higher in any part of the solution than the final value obtained. It is not surprising, therefore, that the application of this process to the separation of aluminum should yield results surpassing in accuracy those obtained by the usual methods. This paper describes such separations in which the aluminum was precipitated as basic sulfate and basic succinate. There is little doubt that other anions, which form dense precipitates such as benzoate, would give similar results. The solubility of the basic sulfate was found to be about the same as that of aluminum hydroxide (*20*), equivalent to 0.2 mg. of aluminum oxide per liter in the pH range 6.5 to 7.5.

Quantitative Determination of Aluminum by Precipitation as Basic Sulfate

MATERIALS USED. The aluminum metal was a special grade obtained from the Aluminum Company of America and contained 99.94 per cent of Al, 0.03 per cent of Si, 0.01 per cent of Ti, and 0.03 per cent of Fe. The latter two are, of course, always precipitated with the aluminum. The urea was a C. P. grade. Ammonium chloride was reagent quality material. Ammonium hydroxide was prepared by passing ammonia from a cylinder through a scrubbing bottle into redistilled water contained in a quartz flask.

PROCEDURE. Approximately 0.1 gram of the aluminum metal was weighed into 600-ml. beakers, tall-form, and dissolved in about 5 ml. of dilute hydrochloric acid, gently warming at the end to ensure complete solution. After diluting somewhat, dilute ammonium hydroxide was added until the solution became slightly turbid, then it was cleared with dilute hydrochloric acid, and one or two drops in excess were added. Four grams of urea, 20 grams of ammonium chloride, and 1 gram of ammonium sulfate were introduced and the volume was brought to 500 ml. The solution was then heated to boiling and kept gently boiling for 2 hours after the appearance of an opalescence, after which it was placed on an electric hot plate for 1 hour to allow the precipitate to settle. The precipitate was filtered off, and that adhering to the beaker removed as thoroughly as possible by means of pieces of filter paper.

To ensure complete removal of the last traces of the precipitate, it was dissolved in a little hydrochloric acid, reprecipitated by the procedure of Blum (*2*), and filtered through the paper containing the main portion of the precipitate. The combined precipitates were washed ten times with hot 1 per cent ammonium chloride solution, made alkaline to methyl red with ammonium hydroxide. After ignition to constant weight in a platinum crucible over a blast Meker at approximately 1200° C., it was weighed in a counterpoised weighing bottle. The pH of the filtrate and the amount of aluminum in the filtrate and washings, amounting to 0.078 to 0.1 mg., were determined colorimetrically (*21*).

Several workers (*6, 10, 13, 14*) have reported that sulfate which accompanies aluminum when it is precipitated as hydroxide from sulfate solutions, is very difficult to remove by ignition. An examination of the ignited oxide obtained above, by fusion with sodium carbonate and finally testing with barium chloride, showed that only a negligible amount of

Table I. Quantitative Determination of Aluminum by Precipitation as Basic Sulfate

Final pH of Solution	Al_2O_3[a] Taken	Al_2O_3 Found	Error Al_2O_3
	Gram	*Gram*	*Mg.*
7.08	0.1913	0.1916	+0.3
7.07	0.1954	0.1956	+0.2
7.03	0.1960	0.1957	−0.3
7.27	0.1950	0.1954	+0.4
6.77	0.1915	0.1912	−0.3
6.58	0.1909	0.1907	−0.2
7.09	0.1941	0.1940	−0.1
7.17	0.1920	0.1917	−0.3
6.94	0.1920	0.1921	+0.1
6.99	0.1914	0.1913	−0.1

[a] Corrected for impurities in the original metal.

Table II. Separation of Aluminum from Other Elements

(Single precipitation)

Aluminum Taken	Metal Added		Amount Present in Precipitate
Gram		*Gram*	*Mg.*
0.1	Ca[a]	1.0	Trace
0.1	Mg	1.0	None
0.1	Ni	0.125	0.7
0.1	Co	0.125	1.0
0.1	Zn	0.125	13.6
0.1	Mn	1.0	0.1
0.1	Cd	0.125	0.4
0.1	Cu	0.125	7.3

[a] 0.5 gram of $(NH_4)_2SO_4$ used since 1 gram caused slight precipitation of $CaSO_4$.

sulfate was retained. Since the earlier work (*20*) indicated that the precipitate was relatively rich in sulfate, this shows that sulfate can be completely removed by igniting to a sufficiently high temperature (1200° C.). The results obtained by the above procedure are given in Table I.

Separation of Aluminum from Calcium, Magnesium, Nickel, Cobalt, Zinc, Manganese, Cadmium, and Copper. According to Lundell and Knowles (*12*), aluminum can be separated from the alkalies, alkaline earths, magnesium, and moderate amounts of manganese and nickel by precipitating according to the procedure of Blum (*2*). The separation from copper, cobalt, and zinc is not satisfactory, from 4 to 20 mg. remaining after one precipitation, and from 1 to 10 mg. after two, using 100 mg. of aluminum and 50 mg. of the accompanying element (*9*). From the analytical qualities of the precipitate obtained by the present method, considerably better separations might be expected.

It was found that when separate solutions containing 0.5 gram of nickel, cobalt, zinc, manganese, cadmium, and copper as chlorides, together with 4 grams of urea and 1 gram of potassium sulfate were heated overnight on a hot plate, partial precipitation occurred. However, if the solutions contained 10 grams of ammonium chloride in addition to the above, no precipitate formed. The effectiveness of the separation of aluminum from these elements, and also from calcium and magnesium, was determined by precipitating the aluminum from individual solutions containing their chlorides, using the procedure described above. After filtering and washing, the precipitate was dissolved in hydrochloric acid, and the amount of accompanying element carried down was determined by an appropriate standard procedure. Table II gives the data obtained.

These results show that the separation of aluminum from calcium, magnesium, manganese, and cadmium, by a single precipitation with urea in the presence of sulfate, is satisfactory. Using this method only 0.1 mg. of manganese is carried down by 0.1 gram of aluminum in the presence of 1 gram of manganese, while with an ammonium hydroxide precipitation, 1.7 mg. of manganese accompanies the aluminum when these same amounts of the two elements are used. The separation from nickel, cobalt, zinc, and copper is not very good, although a single precipitation by this method is at least as effective with the last three of these elements as a double one with ammonium hydroxide.

Since the final pH values of the solutions were 6.7 to 7.0, which is about the same as that of Blum's method, it is probable that the greater purity of the precipitate obtained by the present method is due to the reasons mentioned above. The gradual increase in the pH of the solution, which is uniform throughout, allows the major part of the aluminum to be precipitated before the pH rises to a point where there is danger of precipitating the more basic elements.

Precipitation of Aluminum in the Presence of Succinate

Preliminary Investigation. In the exploratory work on the influence of various anions on the quality of the precipitates obtained with urea, it was found that those formed in the presence of formate, oxalate, succinate, benzoate, and phthalate were dense, while that formed in the presence of acetate was flocculent (*20*). Several workers (*1, 3, 15*) have reported that the pH values at which hydroxides or basic salts begin to precipitate show some variation in the presence of different anions.

A series of determinations with different anions was made to determine the pH necessary for complete precipitation. Solutions of 500-ml. volume, containing approximately 0.1 gram of aluminum as chloride, 4 grams of urea, and 10 grams of ammonium chloride together with the amounts of the various salts shown in Table III, were heated in a boiling water bath until the appearance of a slight opalescence. The solutions were then rapidly cooled to room temperature and the pH was determined with a quinhydrone electrode. The solutions were then gently boiled for 2 hours, the precipitate was filtered off, the filtrate tested for complete precipitation, and the pH determined.

Further study of the basic acetate method employed by Mittasch (*16*), Funk (*7*), and Kling, Lassieur, and Lassieur (*11*) failed to establish any conditions which would give a dense precipitate when the neutralization was caused by the hydrolysis of urea. The basic formate method (*5, 8*) modified by heating with urea was unsuccessful, as shown by attempts to precipitate aluminum in the presence of nickel. If enough formate was present to give a dense precipitate, the aluminum was incompletely precipitated, and that portion which did precipitate showed the presence of nickel. With 4 grams of ammonium formate in the solution, only about 60 per cent of the aluminum precipitated, while with 15 grams present, about 33 per cent came down. With much smaller amounts of formate, the beneficial effect of the anion on the quality of the precipitate was not realized. Work with the succinate showed that conditions which would give a dense precipitate and quantitative precipitation could be attained easily if succinic acid was added instead of sodium succinate, since the latter causes an immediate precipitate.

Conditions for Complete Precipitation of Aluminum in the Presence of Succinate. It was found that the amount of succinate present affected not only the character of the precipitate but also the completeness of the precipitation,

Table III. Influence of Certain Anions on the pH of First Opalescence and Complete Precipitation

Anion	Salt Used	Salt	pH at First Opalescence[a]	pH after 2 Hours	Precipitation
		Grams			
Phosphate	$(NH_4)_2HPO_4$[b]	3	2.3	6.1[c]	Complete
Succinate	Acid	5	3.6	4.0	Complete
Phthalate	$KHC_8H_4O_4$	3	3.8	4.9	Complete
Sulfate	$(NH_4)_2SO_4$	1	4.2	6.5–7.5	Complete
Formate	HCOONa[b]	3	4.8	6.0	Incomplete
Acetate	$NaC_2H_3O_2$[b]	3	[d]	5.5	Complete

[a] pH measured at room temperature, opalescence noted at boiling point.
[b] Original solution contained sufficient hydrochloric acid to prevent formation of a precipitate while being brought to a boil.
[c] Precipitation probably complete in less than 2 hours.
[d] Precipitate flocculated too rapidly to allow determination of this value.

especially when other elements were present. Three grams of succinic acid and 10 grams of ammonium chloride in 500 ml. were sufficient to give a dense precipitate, and complete precipitation of aluminum when alone. However, if 0.15 gram of nickel or zinc was present, the precipitation of the aluminum was incomplete with 3 grams of succinic acid, but quantitative if 4 grams or 5 grams were used.

Since the pH of the solution and consequently the completeness of precipitation are dependent on the duration of boiling, this relationship was studied in a manner similar to the determination of the solubility of the basic aluminum sulfate precipitate. The solutions containing 0.1 gram of aluminum, 4 grams of urea, 5 grams of succinic acid, and 10 grams of ammonium chloride in 500 ml. were gently boiled, after the appearance of turbidity, for the lengths of time given in Table IV. The determinations were then completed as previously described (*20*).

This shows that for the complete precipitation of aluminum by heating with urea in the presence of succinate and ammonium chloride, it is necessary to boil gently for 1.5 to 2 hours after the appearance of turbidity, and that this procedure results in a pH of about 4.4.

Quantitative Determination of Aluminum by the Succinate Method

Procedure. The aluminum solution was prepared as described in the basic sulfate method. After diluting somewhat, 5 grams of succinic acid dissolved in about 100 ml. of water were added, followed by 10 grams of ammonium chloride and 4 grams of urea. The solution was diluted, heated to boiling, and gently boiled for 2 hours after it had become turbid (40 to 45 minutes after it had commenced to boil). The precipitate was allowed to subside for a few minutes, and after a little paper pulp was added, it was filtered and washed ten times with a 1 per cent succinic acid solution, made neutral to methyl red with ammonium hydroxide. The precipitate adhering to the beaker was removed as in the basic sulfate method, except that in this instance the small precipitate obtained with ammonium hydroxide was filtered on a separate paper. The combined precipitates were ignited to constant weight in a platinum crucible at 1200° C. The pH of the filtrate was determined with a quinhydrone electrode, and the amount of aluminum remaining in the filtrate (approximately 0.1 mg.) and in the wash waters (negligible) was ascertained colorimetrically as before.

Modified Procedure. When the entire neutralization is dependent on the decomposition of urea, considerable time is consumed before precipitation commences, especially when an acid reducing agent is added as in the determination of copper, discussed later. To avoid this, a partial preliminary neutralization with dilute ammonium hydroxide was tried. When this reagent was slowly added to a cold solution containing urea, ammonium chloride, and succinic acid until barely turbid, a flocculent precipitate was rapidly formed on heating to boiling. However, if it was added dropwise to the hot solution to the point of faintest opalescence, the precipitate obtained on further heating was entirely satisfactory. It was slightly more bulky than that obtained without preliminary neutralization, but was still compact enough to filter and wash rapidly. It had the distinct advantage of being more easily retained by the filter paper.

Table IV. Effect of Duration of Boiling on pH of Solution and Completeness of Precipitation

Duration of Boiling[a]	pH of Solution	Al_2O_3 in Filtrate
Hours		*Mg./l.*
0.25	3.30	[b]
0.5	3.58	1.2
1	3.93	0.8
1.25	4.01	0.8
1.5	4.15	0.2
2	4.40	0.2

[a] After the appearance of turbidity.
[b] Sufficient aluminum left in the filtrate to give a precipitate with ammonium hydroxide.

Table V. Quantitative Determination of Aluminum by the Succinate Method

Volume	Duration of Boiling	pH of Solution	Al_2O_3 Taken	Al_2O_3 Found	Error Al_2O_3
Ml.	*Hours*[a]	[b]	*Gram*	*Gram*	*Mg.*
500	2	4.43	0.1912	0.1911	−0.1
500	2	4.57	0.1906	0.1903	−0.3
500	2	4.44	0.1906	0.1906	±0.0
500	2	4.32	0.1931	0.1927	−0.4
500	2	4.26	0.1899	0.1899	±0.0
500	2	4.26	0.1899	0.1895	−0.4
500	2	4.48	0.1899	0.1896	−0.3
250	2	4.36	0.1911	0.1911	±0.0
250	2	4.22	0.1903	0.1900	−0.3
250	2	4.44	0.0957	0.0956	−0.1
250	2	4.31	0.0960	0.0958	−0.2
250	2	4.53	0.0059	0.0059	±0.0
250	2	4.50	0.0057	0.0056	−0.1
250	2	4.62	0.0025	0.0015	−1.0
250	2	4.53	0.0017	0.0005	−1.2
250	3	4.77	0.0021	0.0021	±0.0
250	3	4.94	0.0023	0.0023	±0.0
		Modified Method			
250	0.5	3.76	0.1894	0.1887	−0.7
250	1	3.96	0.1897	0.1898	+0.1
500	1	4.01	0.1897	0.1898	+0.1
500	1	3.98	0.1905	0.1908	+0.3
500[c]	1	4.00	0.1903	0.1907	+0.4
500[c]	1	3.86	0.1909	0.1906	−0.3
500[d]	1	3.98	0.1901	0.1900	−0.1
500[d]	1	4.03	0.1906	0.1906	±0.0

[a] After the appearance of turbidity.
[b] At room temperature.
[c] Bromophenol blue used as indicator.
[d] Methyl orange used as indicator.

Since turbidity appears at approximately the pH at which bromophenol blue or methyl orange changes color, it is sometimes convenient to employ one of these as indicators. It is, of course, not necessary to neutralize to the point of turbidity, but it is very important not to overstep it, since this will cause the formation of a somewhat flocculent precipitate on further heating. Table V shows the results obtained using both procedures. A correction was made for impurities in the metal.

Experiments on the ignition of the precipitate showed that heating for 1 hour at 1200° C. was sufficient to attain constant weight and to convert it into a nonhygroscopic (corundum) form which could be weighed directly in a covered crucible without the necessity of placing it in a covered weighing bottle. It was also found that Coors unglazed porcelain crucibles suffered no change in weight during such ignition and they were, therefore, used in place of platinum in most subsequent work.

It is evident that aluminum can be quantitatively precipitated by heating with urea in the presence of succinate and ammonium chloride for 1 to 2 hours after the appearance of turbidity if 5 mg. or more are present, and that the time can be shortened by partial preliminary neutralization. With smaller amounts, about an hour longer is required. The resulting low pH, combined with the granular quality of the precipitate, the slow rate of precipitation, and the homogeneity of the solution, should allow much more satisfactory separations from the more basic elements than precipitation by ammonium hydroxide or even as the basic sulfate.

Separation of Aluminum from Other Metals

This method was applied to the separation of aluminum from a considerable number of other metals. In all cases the weight of aluminum taken was corrected for impurities. When a second precipitation was made, the basic succinate was dissolved from the filter into the same beaker by hot, dilute hydrochloric acid and the process repeated. The impurity in the oxide was determined by suitable methods.

Determination of Aluminum in the Presence of Calcium, Barium, Magnesium, Manganese, and Cadmium. These separations and determinations were made by a single precipitation from a volume of 250 ml. Table VI shows the results obtained, and indicates clearly that by this method a

TABLE VI. DETERMINATION OF ALUMINUM IN PRESENCE OF CALCIUM, BARIUM, MAGNESIUM, MANGANESE, AND CADMIUM BY PRECIPITATION AS BASIC SUCCINATE

Element Added	Al_2O_3 Taken	Al_2O_3 Found	Element with Al_2O_3	Error Al_2O_3
Gram	*Gram*	*Gram*	*Mg.*	*Mg.*
1.0 Ca	0.1897	0.1895	None	−0.2
1.0 Ca	0.1905	0.1903	None	−0.2
1.0 Ca	0.1905	0.1904	None	−0.1
1.0 Ca	0.1903	0.1904	None	+0.1
1.0 Ba	0.1909	0.1908	None	−0.1
1.0 Ba	0.1905	0.1905	None	±0.0
1.0 Mg	0.1906	0.1904	None	−0.2
1.0 Mg	0.1906	0.1907	None	+0.1
1.0 Mg	0.1892	0.1894	None	+0.2
1.0 Mg	0.1894	0.1890	None	−0.4
1.0 Mn	0.1904	0.1906	0.3	+0.2
1.0 Mn	0.1904	0.1906	0.3	+0.2
1.0 Mn	0.0949	0.0950	0.25	+0.1
1.0 Mn	0.0949	0.0953	0.25	+0.4
1.0 Mn[a]	0.1903	0.1901	0.2	−0.2
1.0 Mn[a]	0.1906	0.1905	0.2	−0.1
0.5 Mn	0.1895	0.1897	0.2	+0.2
0.5 Mn	0.1890	0.1893	0.2	+0.3
1.0 Cd	0.1901	0.1901	<0.1	±0.0
1.0 Cd	0.1902	0.1900	<0.1	−0.2
1.0 Cd	0.1906	0.1907	<0.1	+0.1
1.0 Cd	0.1897	0.1897	<0.1	±0.0

[a] Precipitated from 500 ml.

TABLE VII. DETERMINATION OF ALUMINUM IN THE PRESENCE OF NICKEL AND COBALT BY PRECIPITATION AS BASIC SUCCINATE

Element Added	Number of Precipitations	Volume	Al_2O_3 Taken	Al_2O_3 Found	Ni or Co in Al_2O_3	Error Al_2O_3
Gram		*Ml.*	*Gram*	*Gram*	*Mg.*	*Mg.*
1.0 Ni	1	250	0.1903	0.1921	1.8	+1.8
1.0 Ni	1	250	0.1901	0.1919	1.8	+1.8
1.0 Ni	1	500	0.1905	0.1922	1.3	+1.7
1.0 Ni	1	500	0.1901	0.1918	1.2	+1.7
1.0 Ni[a]	1	500	0.1897	0.1913	1.0	+1.6
1.0 Ni[a]	1	500	0.1893	0.1910	1.0	+1.7
1.0 Ni	1	500	0.0049	0.0050	Trace	+0.1
1.0 Ni	1	500	0.0056	0.0057	Trace	+0.1
0.5 Ni	1	250	0.1919	0.1935	1.3	+1.6
0.5 Ni	1	250	0.1905	0.1923	1.6	+1.8
0.1 Ni	1	250	0.1901	0.1904	0.3	+0.3
0.1 Ni	1	250	0.1901	0.1903	0.3	+0.2
1.0 Ni	2	250	0.1903	0.1903	0.2	±0.0
1.0 Ni	2	250	0.1901	0.1903	0.3	+0.2
1.0 Ni	2	500	0.1895	0.1893	0.1	−0.2
1.0 Ni	2	500	0.1901	0.1902	0.2	+0.1
1.0 Co	1	250	0.1894	0.1919	1.9	+2.5
1.0 Co	1	250	0.1897	0.1924	2.0	+2.7
1.0 Co	1	500	0.1913	0.1932	1.2	+1.9
1.0 Co	1	500	0.1906	0.1925	1.2	+1.9
1.0 Co[a]	1	500	0.1906	0.1921	1.2	+1.5
1.0 Co[a]	1	500	0.1899	0.1914	1.2	+1.5
1.0 Co	1	250	0.0058	0.0058	Trace	±0.0
1.0 Co	1	250	0.0040	0.0043	Trace	+0.3
0.5 Co	1	250	0.0964	0.0977	0.8	+1.3
0.5 Co	1	250	0.0954	0.0963	0.6	+0.9
0.1 Co	1	250	0.0954	0.0954	0.2	±0.0
0.1 Co	1	250	0.0968	0.0971	0.3	+0.3
1.0 Co	2	250	0.1895	0.1896	0.1	+0.1
1.0 Co	2	250	0.1902	0.1904	0.1	+0.2
1.0 Co	2	250	0.1899	0.1903	0.1	+0.4
1.0 Co	2	250	0.1904	0.1902	0.1	−0.2

[a] Modified procedure.

single precipitation from 250 ml. will satisfactorily separate approximately 0.1 gram of aluminum from 1 gram of the above elements.

DETERMINATION OF ALUMINUM IN THE PRESENCE OF NICKEL AND COBALT. Table VII shows the results obtained when this method is applied to the separation of aluminum from nickel and cobalt.

It is evident that one precipitation will effectively separate 0.1 gram of aluminum from an equal amount of cobalt or nickel or a few milligrams of aluminum from as much as 1 gram. A double precipitation gives a very satisfactory separation of 0.1 gram of aluminum from as much as 1 gram of these metals. This is a much better separation than that obtained by the use of ammonia, which, after one precipitation, leaves 0.6 mg. of nickel and 4.1 mg. of cobalt out of 50 mg. with the aluminum when one precipitation is made, and 1.2 mg. of cobalt after two precipitations (*9*).

DETERMINATION OF ALUMINUM IN THE PRESENCE OF COPPER. When this general procedure is applied to the determination of aluminum in the presence of copper, the separation is incomplete, owing to the relatively low solubility of cupric succinate. If, however, the copper is kept in the cuprous state, by the presence of a suitable reducing agent during the precipitation, the separation becomes entirely satisfactory, as the results given in Table VIII show.

When a reducing agent was used, 4 grams of hydroxylamine hydrochloride or 10 ml. of freshly prepared 2 *N* ammonium bisulfite and 10 grams of ammonium chloride were added to the aluminum chloride solution. It was diluted to about 150 ml. and heated to boiling to reduce the copper to the cuprous state. When the solution had become colorless, 5 grams of succinic acid and 4 grams of urea were added, and the volume was brought to about 250 ml. Dilute ammonium hydroxide was added dropwise to the hot solution to incipient turbidity, and gentle boiling continued for 2 hours. The precipitate was filtered off while hot and washed with a hot solution containing per liter 10 grams of succinic acid and either 10 grams of hydroxylamine hydrochloride or 40 ml. of 2 *N* ammonium bisulfite, the wash solution having been made neutral to methyl red with ammonium hydroxide. The determination was completed as described above.

The main points to be noted are that the copper must be completely reduced to the cuprous state, and the filtration and washing must be done hot.

These data show that aluminum can be very satisfactorily separated from large amounts of copper by a single precipitation, by heating with urea in the presence of succinate, ammonium chloride, and a suitable reducing agent. A double precipitation with ammonium hydroxide will usually leave as much as 8 mg. of copper out of 50 mg. with the aluminum, when precipitating 0.1 gram of the latter (*9*).

TABLE VIII. DETERMINATION OF ALUMINUM IN THE PRESENCE OF COPPER

No.	Cu Added	Reducing Agent	Al_2O_3 Taken	Al_2O_3 Found	Cu in Al_2O_3	Error Al_2O_3
	Gram		*Gram*	*Gram*	*Mg.*	*Mg.*
1	0.1	None	0.0947	0.0972	...	+2.5
2	0.1	None	0.0953	0.0976	...	+2.3
3	0.01	None	0.0945	0.0956	...	+1.1
4	0.01	None	0.0953	0.0960	...	+0.7
5	1.0	$NH_2OH \cdot HCl$	0.1897	0.1901	0.1	+0.4
6	1.0	$NH_2OH \cdot HCl$	0.1903	0.1901	0.1	−0.2
7	1.0	$NH_2OH \cdot HCl$	0.0951	0.0952	None	+0.1
8	1.0	$NH_2OH \cdot HCl$	0.0949	0.0952	None	+0.3
9	1.0	$NH_2OH \cdot HCl$	0.0953	0.0953	None	±0.0
10	1.0	$NH_2OH \cdot HCl$	0.0951	0.0950	None	−0.1
11	1.0	NH_4HSO_3	0.1891	0.1888	0.05	−0.3
12	1.0	NH_4HSO_3	0.1891	0.1891	0.05	±0.0

DETERMINATION OF ALUMINUM IN THE PRESENCE OF ZINC. The general procedure applied to the determination of aluminum in the presence of zinc gave the results shown in Table IX, which indicate that, even with as little as 10 mg. of zinc present, an appreciable amount is to be found with the aluminum after a single precipitation. Only 0.1 to 0.2 mg., however, is found to be present after two precipitations, when as much as 1 gram was originally present. The superiority of this method over the use of ammonium hydroxide is obvious from the fact that in the latter case as much as 10 mg. out of 50 mg. of the zinc may accompany the aluminum after two precipitations (*9*).

Since zinc metal is readily volatilized at elevated temperatures, it should be possible to remove the small amount which accompanies the aluminum by ignition in a current of hydrogen or with carbon.

A single precipitation was made in the usual manner from 500 ml. of solution containing 1.0 gram of zinc and approximately 0.1 gram of aluminum. When the ignition was to be made in the presence of carbon, some paper pulp was added before filtration. The precipitate was ignited in a covered unglazed porcelain crucible over a Meker blast, occasionally lifting the cover to allow the zinc to escape. After ignition for an hour in this manner, the cover was removed, the remainder of the carbon burned off, and the ignition completed in an electrically heated muffle for 1 hour at 1200° C. In determinations 3 to 6 (Table X), this oxide, after weighing, was ignited for 1 hour at 1000° to 1100° C.

Table IX. Determination of Aluminum in the Presence of Zinc

Zn Added	Number of Precipitations	Volume	Al_2O_3 Taken	Al_2O_3 Found	Zn in Al_2O_3	Error Al_2O_3
Gram		*Ml.*	*Gram*	*Gram*	*Mg.*	*Mg.*
1.0	1	500	0.1909	0.1929	1.0	+2.0
1.0	1	500	0.1906	0.1928	1.0	+2.2
1.0[a]	1	500	0.1903	0.1917	1.2	+1.4
1.0[a]	1	500	0.1906	0.1920	1.2	+1.4
0.5	1	500	0.1901	0.1915	[b]	+1.4
0.5	1	500	0.1909	0.1923	[b]	+1.4
0.1	1	500	0.1903	0.1911	0.3	+0.8
0.1	1	500	0.1906	0.1914	0.3	+0.8
0.01	1	500	0.1901	0.1904	0.3	+0.3
0.01	1	500	0.1914	0.1918	0.3	+0.4
1.0	2	250	0.0953	0.0957	0.2	+0.4
1.0	2	250	0.0951	0.0952	0.2	+0.1
1.0	2	250	0.0955	0.0956	0.2	+0.1
1.0	2	250	0.0953	0.0955	0.2	+0.2

[a] Modified procedure.
[b] Not determined.

Table X. Separation of Aluminum from Zinc Precipitate Ignited with Carbon and/or in a Current of Hydrogen

(1 gram of zinc present. Single precipitation, volume 500 ml.)

No.	Al_2O_3 Taken	Al_2O_3 Found after Igniting with Carbon	Error Al_2O_3	Al_2O_3 Found after Igniting in Hydrogen	Zn in Al_2O_3	Error Al_2O_3
	Gram	*Gram*	*Mg.*	*Gram*	*Mg.*	*Mg.*
1	0.1892	0.1896	+0.4	....	...	...
2	0.1892	0.1894	+0.2	....	...	...
3	0.1905	0.1912	+0.7	0.1905	...	±0.0
4	0.1894	0.1895	+0.1	0.1893	...	−0.1
5	0.1899	0.1911	+1.2	0.1900	...	+0.1
6	0.1903	0.1917	+1.4	0.1903	...	±0.0
7	0.1903	....	...	0.1905	None	+0.2
8	0.1906	....	...	0.1906	None	±0.0
9[a]	0.1909	....	...	0.1907	None	−0.2
10[a]	0.1890	....	...	0.1889	None	−0.1

[a] Single precipitation from 250 ml.

over a Meker blast, in a current of hydrogen introduced through a silica Rose crucible cover and inlet tube. This treatment was followed by 1 hour at 1200° C. in the electric muffle. Determinations 7 to 10 were precipitated as described, but filtered without adding paper pulp. The filter paper was charred off and the oxide ignited in a stream of hydrogen, followed by 1 hour at 1200° C., as above.

The results, tabulated in Table X, show that the zinc carried down by the aluminum can be completely volatilized by heating the precipitate for 1 hour in a covered crucible in a current of hydrogen. This makes it possible to determine aluminum in the presence of large amounts of zinc by a single precipitation, following the given procedure.

The failure to remove the zinc by igniting with carbon may be due to the absence of any gas stream to sweep out the volatilized metal.

Determination of Aluminum in Zinc-Base Die-Casting Alloys. These alloys contained about 2.8 per cent of copper and 92.5 per cent of zinc with very small amounts of lead, cadmium, magnesium, and iron.

A 1-gram sample of the alloy was dissolved in sufficient hydrochloric acid to be equivalent to about 10 grams of ammonium chloride, adding a few crystals of potassium chlorate at the end to obtain complete solution. Most of the free acid was neutralized with ammonium hydroxide, 0.1 to 0.2 gram of hydroxylamine hydrochloride was added, and the solution heated (see "Determination of Aluminum in the Presence of Copper"). Dilute ammonium hydroxide was added until the precipitate redissolved with difficulty, then 4 grams of urea and 5 grams of succinic acid were introduced and the volume was brought to about 250 ml.

When the solution had gently boiled for 2 hours after becoming turbid, the liquid was decanted through a filter paper containing a small amount of paper pulp. The precipitate was washed by decantation a few times with a solution containing 1 per cent succinic acid and 0.01 per cent hydroxylamine hydrochloride, and made neutral to methyl red with ammonium hydroxide. It was then dissolved in hydrochloric acid; 10 grams of ammonium chloride, 4 grams of urea, and 5 grams of succinic acid were added, and it was reprecipitated in a volume of 250 ml. The solution was filtered through the original paper, and the precipitate adhering to the beaker removed as before described. The precipitates were ignited together in an unglazed porcelain crucible, first at a low temperature to char off the paper and finally for 1 to 1.5 hours at 1200° C. in an electrically heated muffle. The first ten determinations in Table XI were made in the above manner.

Determinations 11 to 14 were made by the modified procedure. The samples were prepared and the reagents added as before. The solution was diluted to about 500 ml., and heated to boiling and dilute ammonium hydroxide was added dropwise to incipient turbidity. After gentle boiling for 1 hour, the precipitate was filtered off and washed, and the last traces were removed from the beaker as usual. The filter paper was charred off in an unglazed porcelain crucible, and the oxide was ignited for 1 hour in a current of hydrogen, then 1 hour at 1200° C. in air.

For the purpose of comparison, determinations 15 and 16 were made by the method of Craighead (*4*), in which zinc, copper, etc., are removed by electrodeposition at a mercury cathode. Numbers 17 and 18 were made using a combination of the mercury cathode method, followed by a double precipitation by the present method.

These results show that small percentages of aluminum can be accurately determined in a commercial alloy containing a large per cent of zinc by either of the two methods given.

Table XI. Determination of Aluminum in a Zinc-Base Die-Casting Alloy

No.	Sample	Number of Precipitations	Volume	Sample Taken	Al_2O_3 Found	Al Found	Al Present
			Ml.	*Grams*	*Gram*	%	%
1	A	2	250	1.001	0.0738	3.91	3.92[a]
2	A	2	250	1.002	0.0739	3.90	3.92
3	A	2	250	1.002	0.0739	3.90	3.92
4	A	2	250	1.000	0.0739	3.91	3.92
5	B	2	250	1.001	0.0739	3.91	3.92
6	B	2	250	1.002	0.0737	3.89	3.92
7	B	2	250	1.002	0.0744	3.93	3.92
8	B	2	250	1.002	0.0742	3.92	3.92
9	C	2	250	1.002	0.0747	3.94	3.94[b]
10	C	2	250	1.002	0.0742	3.92	3.94
11	A	1	500	1.004	0.0739	3.90	3.92[a]
12	A	1	500	1.002	0.0738	3.90	3.92
13[c]	A	1	500	1.001	0.0739	3.90	3.92
14[c]	A	1	500	1.001	0.0741	3.92	3.92
15	A	...	...	2.001	0.1470	3.89	3.92
16	A	...	...	2.000	0.1490	3.95	3.92
17	A	...	...	2.001	0.1470	3.89	3.92
18	A	...	...	2.002	0.1473	3.89	3.92

[a] Bureau of Standards analysis. Not a standard sample.
[b] 3.94% Al by Gooch-Havens method using a 10-gram sample.
[c] No. 13 ignited with carbon gave 3.90% Al, while No. 14 gave 3.95% Al.

Determination of Aluminum in the Presence of Iron. Since ferric iron begins to precipitate at a pH of approximately 2, it is obvious that for any separation of aluminum as a basic salt the iron must be in the ferrous state, under which conditions it commences to precipitate at a pH of 5.5 (*3*). With the present method of precipitation, the final pH of the solution is seldom above 4.5, which should allow an excellent separation of aluminum from ferrous iron. This would require the presence of a reducing agent which is stable enough to withstand the rather extended time of heating and yet strong enough to keep the iron completely reduced. The reducing agents sodium thiosulfate, ammonium bisulfite, sodium hydrosulfite, phenylhydrazine, hydroxylamine hydrochloride plus a little copper as catalyst (*19*), hydroquinone, *p*-aminophenol, *o*-aminophenol, and *p*-anisidine were examined for this purpose.

The procedure was similar to that employed in the determination of aluminum in the presence of copper. The amount of electrolytic iron shown in the tables was dissolved in hydrochloric acid and added to the aluminum chloride solution. After reducing the iron as completely as possible by adding fresh ammonium bisulfite to the hot solution, the ammonium chloride, urea, succinic acid, and reducing agent were introduced. The solution was diluted to 500 ml., heated to boiling, and neutralized to incipient turbidity with ammonium hydroxide, and the determina-

Table XII. Effectiveness of Reducing Agents on the Separation of Aluminum from Iron by Precipitation as Basic Succinate

No.	Fe Taken	No. of Pptns.	Reducing Agent[a]	Al_2O_3 Taken	Al_2O_3 Found, Corrected for Fe_2O_3	Fe_2O_3 in Pptn.	Error Al_2O_3
	Grams			*Gram*	*Gram*	*Mg.*	*Mg.*
1	1.0	1	5 grams $Na_2S_2O_3 \cdot 5H_2O$	0.1910	0.1912	3.0	+0.2
2	1.0	2	5 grams $Na_2S_2O_3 \cdot 5H_2O$	0.1904	0.1902	0.2	−0.2
3	1.0	2	5 grams $Na_2S_2O_3 \cdot 5H_2O$	0.1918	0.1922	0.4	+0.4
4	1.0	2	5 grams $Na_2S_2O_3 \cdot 5H_2O$	0.1918	0.1918	0.5	±0.0
5	1.0	2	5 grams $Na_2S_2O_3 \cdot 5H_2O$	0.1897	0.1898	0.4	+0.1
6	1.0	1	5 grams $Na_2S_2O_3 \cdot 5H_2O$; 0.5 ml. phenylhydrazine	0.1893	0.1893	2.2	±0.0
7	1.0	1	1.5 grams sodium hydrosulfite	0.1889	0.1920	1.3	+2.1
8	1.0	1	1.5 grams sodium hydrosulfite	0.1894	0.1941	1.8	+4.7
9	1.0	2	4 grams $NH_2OH \cdot HCl$, 25 mg. Cu	0.1903	0.1897	..	−0.6
10	1.0	2	3 grams $NH_2NH_2 \cdot 2HCl$, 25 mg. Cu	0.1913	0.1915	0.4	+0.2
11	1.0	2	3 grams $NH_2NH_2 \cdot 2HCl$, 25 mg. Cu	0.1903	0.1901	0.4	−0.2
12	1.0	2	3 grams $NH_2NH_2 \cdot H_2SO_4$	0.1901	0.1907	0.5	+0.6
13	1.0	2	3 grams $NH_2NH_2 \cdot H_2SO_4$	0.1903	0.1911	0.5	+0.8
14[b]	0.05	1	2 grams $NH_2NH_2 \cdot H_2SO_4$	0.1892	0.1890	0.5	−0.2
15[b]	0.05	1	2 grams $NH_2NH_2 \cdot H_2SO_4$	0.1892	0.1888	0.4	−0.4
16	1.0	2	3 grams NH_2NH_2 H_2SO_4	0.1943	0.1944	0.8	+0.1
17	1.0	2	3 grams $NH_2NH_2 \cdot H_2SO_4$	0.1898	0.1897	0.6	−0.1
18	1.0	1	3 grams $NH_2NH_2 \cdot H_2SO_4$; 0.5 ml. phenylhydrazine	0.1900	0.1896	1.9	−0.4
19	1.0	2	3 grams *p*-aminophenol	0.1895	0.1882	0.3	−1.3
20	1.0	2	3 grams *p*-aminophenol	0.1934	0.1915	0.3	−1.9
21	1.0	2	3 grams *p*-aminophenol	0.1908	0.1898	0.4	−0.9
22	1.0	2	3 grams *o*-aminophenol hydrochloride	0.1891	0.1888	0.4	−0.3
23	1.0	2	3 grams *o*-aminophenol hydrochloride	0.1910	0.1904	0.2	−0.6
24	1.0	2	3 grams *o*-aminophenol hydrochloride	0.1899	0.1852	0.2	−4.7
25	0.02	1	3 grams hydroquinone	0.1912	0.1913	0.5	+0.1
26	1.0	2	2 grams hydroquinone	0.1889	0.1890	0.2	+0.1
27	1.0	2	3 grams hydroquinone	0.1894	0.1893	0.3	−0.1
28	1.0	2	2 grams hydroquinone	0.1898	0.1901	0.4	+0.3
29	1.0	2	3 grams hydroquinone	0.1905	0.1903	0.25	−0.2
30	1.0	2	3 grams hydroquinone	0.1920	0.1923	0.3	+0.3
31	1.0	2	3 grams hydroquinone	0.1912	0.1914	0.3	+0.2
32	1.0	2	3 grams hydroquinone	0.1905	0.1907	0.3	+0.2
33	2.0	2	3 grams hydroquinone	0.0433	0.0433	0.35	±0.0

[a] Same reducing agent used in second precipitation.
[b] Precipitation and filtration made in an atmosphere of carbon dioxide.

tion was completed as usual, washing the precipitate with a solution of 1 per cent succinic acid and a little of the reducing agent, made neutral to methyl red with ammonium hydroxide. Whenever a double precipitation was made, the first precipitate was dissolved in hydrochloric acid and the process repeated. The iron accompanying the aluminum was determined colorimetrically with thiocyanate after fusion of the ignited oxide with potassium pyrosulfate.

Table XIII. Determination of Aluminum in the Presence of Iron

(2 ml. of phenylhydrazine added as reducing agent in each precipitation)

Fe Taken	No. of Pptns.	Al_2O_3 Taken	Al_2O_3 Found, Corrected for Fe_2O_3	Fe_2O_3 in Pptn.	Error Al_2O_3
Grams		*Gram*	*Gram*	*Mg.*	*Mg.*
0.01	1	0.19325	0.19350	0.13	+0.25
0.02	1	0.19035	0.19030	0.13	−0.05
0.035	1	0.18980	0.18980	0.26	±0.00
0.05	1	0.18975	0.19020	0.50	+0.45
0.05	1	0.19125	0.19110	0.30	−0.15
0.135	1	0.18965	0.18955	0.60	−0.10
1.0	1	0.19060	0.19085	1.15	+0.25
1.0	2	0.19060	0.19050	0.09	−0.10
1.0	2	0.19835	0.19850	0.15	+0.15
2.0	2	0.03985	0.03970	0.07	−0.15
2.0	2	0.05735	0.05755	0.13	+0.20
2.0	2	0.02360	0.02355	0.10	−0.05

Several methods were attempted to remove the iron from the ignited oxide, but no particular success was attained. Ignition of the impure oxide for 1 hour in a current of hydrogen, followed by extraction with hot concentrated hydrochloric acid, failed to remove all the iron and at the same time dissolved from 0.1 to 0.2 mg. of aluminum. Repeated heating of the ignited oxide in an air bath with a mixture of ammonium chloride and ammonium bromide (*17*, *18*) showed that the process was inefficient and of doubtful analytical value for the present purpose. Representative results of this preliminary work are given in Table XII, while Table XIII shows the results obtained using phenylhydrazine as reducing agent.

Tables XII and XIII show that phenylhydrazine is the best suited of any of the above-mentioned reducing agents for keeping the iron reduced, and preventing it from being precipitated with aluminum by urea from a solution containing succinate and ammonium chloride. This is probably due to its tendency to volatilize with steam, thus maintaining a reducing atmosphere above the liquid. In all cases where 1 gram of iron was present, a rust-colored rim of precipitate formed on the wall of the beaker at the surface of the liquid during the first precipitation. This was much less pronounced with phenylhydrazine than with any of the others. If the solution has a volume of approximately 500 ml., the presence of 2 ml. of phenylhydrazine will give a satisfactory separation of 0.1 gram of aluminum from 0.2 gram of iron in a single precipitation. If more iron is present, reprecipitation is necessary. A double precipitation will separate 0.1 gram of aluminum from 1 gram of iron, or 0.03 gram from 2 grams of iron.

Hydroquinone was not quite as effective, 0.2 to 0.4 mg. of ferric oxide usually remaining after two precipitations. Hydroxylamine appeared to keep the iron reduced while the solution was appreciably acid, but as the pH value became high enough for the complete precipitation of aluminum, the iron readily oxidized. This would seem to confirm the views of Solaja (*19*) that ferric iron is easily reduced by this reagent in acid solution, while in alkaline solution ferrous iron is readily oxidized by it.

Sodium thiosulfate, sodium hydrosulfite, and hydrazine sulfate and hydrochloride did not prove at all satisfactory, since they failed to keep the iron reduced or prevent its oxidation at the surface of the liquid. Both *o*- and *p*-aminophenol gave consistently low results for aluminum and at the same time were not particularly good for preventing the precipitation of iron. *p*-Anisidine and ammonium bisulfite proved to be so valueless that no final determinations were made with them.

The above procedure was applied to the determination of aluminum in Bureau of Standards iron ore No. 26, containing 1.01 per cent of Al_2O_3, 0.07 per cent of TiO_2, and 0.09 per cent of P_2O_5. The ore was dissolved with hydrochloric acid, the silica was removed and volatilized in the usual way, and the residual oxides were added to the main solution. The iron was reduced, phenylhydrazine added, and the aluminum precipitated twice according to the above procedure. After weighing the aluminum oxide it was fused with potassium pyrosulfate, the iron and titanium were precipitated by cupferron, and the iron was determined colorimetrically. The phosphorus in the filtrate was determined. The weight of the precipitate was corrected for these impurities. The results are shown in Table XIV.

In Nos. 5 and 6 ammonium sulfate was added instead of succinate, in the hope of obtaining more complete precipitation of phosphorus and aluminum. It is obvious that the method tends to give results which are slightly low. It is possible that some phosphorus was lost in the fusion with pyrosulfate, but it is certain that in the succinate method not all is retained by the precipitate. This was also true when 0.1 gram of aluminum was added to the ore, the recovery in this case being about 60 per cent of the total, whereas by the sulfate method the precipitation of phosphorus was complete.

Attempts were made to precipitate aluminum as phosphate by the use of urea. Although the precipitate filtered exceptionally well, the results were erratic and always too high by 1 to 15 mg., regardless of whether sulfate, succinate, or neither

Table XIV. Determination of Aluminum in Iron Ore

No.	Wt. of Sample	Al_2O_3 Present	Al_2O_3 Found	Error	Phosphorus Present	Phosphorus in Ppt.
	Grams	%	%	%	%	%
1	3.0370	1.01	0.73	0.28	0.09	0.037
2	4.8573	1.01	0.95	0.06	0.09	0.031
3	3.4992	1.01	0.98	0.03	0.09	0.028
4	3.6156	1.01	0.98	0.03	0.09	0.031
5	3.2485	1.01	0.95	0.06	0.09	0.087
6	2.8595	1.01	1.00	0.01	0.09	0.081

was present. It is probable that some of the aluminum, precipitated while the solution is still rather acid, forms an acid phosphate.

A preliminary study of the effect of various anions on the precipitation of other weak bases showed that while sulfate invariably caused the formation of a dense precipitate, there was no uniformity in the action of other anions.

The method has already yielded good results in the case of gallium. If titanium is present it is quantitatively precipitated with the aluminum. By a suitable modification of this method to be described in a later paper it has been found possible to separate titanium from aluminum. The quantitative precipitation of other bases is being investigated.

Summary

It has been found that aluminum can be quantitatively precipitated at a pH of 6.5 to 7.5 by gently boiling for 1 or 2 hours after the appearance of turbidity, its solution containing 4 grams of urea, 10 or 20 grams of ammonium chloride, and 1 gram of ammonium sulfate. A single precipitation gives a very good separation of 0.1 gram of aluminum from 1 gram of calcium, magnesium, and manganese, while the separation from nickel, cobalt, zinc, and copper is much superior to that obtained by the use of ammonia.

The substitution of succinate for sulfate makes the precipitation of aluminum quantitative at a pH of 4.2 to 4.6, from a solution otherwise of similar composition. If the hot solution is first neutralized to incipient turbidity with dilute ammonia, the time required may be considerably shortened without much change in the character of the precipitate.

By this method a single precipitation will effectively separate 0.1 gram of aluminum from an equal amount of nickel or cobalt, or from 1 gram of calcium, barium, magnesium, manganese, and cadmium, or a few milligrams of aluminum from 1 gram of cobalt or nickel. If the final oxide is ignited in a current of hydrogen to volatilize zinc, one precipitation will also serve to separate 0.1 gram of aluminum from 1 gram of zinc. A double precipitation will give an excellent separation of the same quantity of aluminum from 1 gram of nickel, cobalt, or zinc.

The separation from copper in one precipitation is successful if a suitable reducing agent is present to keep the copper in the cuprous state. Iron must also be kept in the ferrous form and phenylhydrazine was found to be the best for this purpose. Two precipitations give a good separation of 0.1 gram of aluminum from 1 gram of iron or of 0.03 gram of aluminum from 2 grams of the latter, but any phosphate present is only partially precipitated. Aluminum can be accurately determined in a zinc-base die-casting alloy containing large amounts of zinc and some copper.

Aluminum phosphate precipitated by this method contains excess of phosphate. The success of this method depends on the slow increase in pH caused by the decomposition of the urea, resulting in a dense precipitate, a homogeneous solution, and a low final pH.

Acknowledgment

The authors are greatly indebted to H. C. Fogg for a large part of the work on the separation of aluminum and iron.

Literature Cited

(1) Anderegg and Daubenspeck, *Proc. Indiana Acad. Sci.*, **35**, 141 (1925).
(2) Blum, W., *J. Am. Chem. Soc.*, **38**, 1282 (1916).
(3) Britton, H. T. S., *J. Chem. Soc.*, **127**, 2110 (1925).
(4) Craighead, C. M., Ind. Eng. Chem., Anal. Ed., **2**, 188 (1930).
(5) Doebereiner, J., *J. prakt. Chem.*, **1**, 371 (1833).
(6) Fresenius, "System of Instruction in Quantitative Analysis," p. 169, London, Churchill and Sons, 1865.
(7) Funk, W., *Z. anal. Chem.*, **45**, 181 (1906).
(8) *Ibid.*, **45**, 489 (1906).
(9) Hillebrand, W. F., and Lundell, G. E. F., "Applied Inorganic Analysis," p. 391, New York, John Wiley & Sons, 1929.
(10) Jander, G., and Weber, B., *Z. anorg. allgem. Chem.*, **131**, 266 (1923).
(11) Kling, A., Lassieur, A., and Lassieur, Mme. A., *Compt. rend.*, **178**, 1551 (1924).
(12) Lundell, G. E. F., and Knowles, H. B., *J. Am. Chem. Soc.*, **45**, 676 (1923).
(13) Lunge, G., *Z. angew. Chem.*, **1889**, 635.
(14) Miller, L. B., *U. S. Pub. Health Repts.*, **38**, 1995 (1923).
(15) *Ibid.*, **40**, 351 (1923).
(16) Mittasch, A., *Z. anal. Chem.*, **42**, 492 (1903).
(17) Moser, L., *Monatsh.*, **53**, 39 (1929).
(18) Moser, L., and Marian, S., *Ber.*, **59B**, 1335 (1926).
(19) Solaja, B., *Z. anal. Chem.*, **80**, 334 (1930).
(20) Willard, H. H., and Tang, N. K., *J. Am. Chem. Soc.*, **59**, 1190 (1937).
(21) Winter, O. B., Thrun, W. E., and Bird, O. D., *Ibid.*, **51**, 2721 (1929).

Received June 28, 1937. From a dissertation presented by N. K. Tang to the Graduate School of the University of Michigan in partial fulfillment of the requirements for the degree of doctor of philosophy.

Simple and Inexpensive Electric Heating Apparatus

FRITZ BREUER[1]
The Ohio State University, Columbus, Ohio

An apparatus which is peculiarly adapted to the heating of volatile solvents for reflux or distillation consists of an ordinary flowerpot with an upper diameter of about 15 cm. and a base of about 9 cm. The hole in the bottom is enlarged (with a rat-tailed file) to accommodate a carbon-filament electric bulb. A set of rings from the ordinary copper water bath is placed on the pot. The whole apparatus is used in a ring stand or tripod support.

The device reduces the danger of solvent inflammability, is free from water vapors which may injure a sensitive reaction, and so illuminates the flask contents as to make observation easy. It successfully refluxes quantities of ether up to 400 to 500 cc.; with higher boiling solvents (benzene, ethyl alcohol) volumes of about 100 cc. can be distilled off, if a towel or asbestos paper is wrapped around the flask for insulation.

The heat output can be varied by substituting a low-wattage tungsten-filament bulb or a heating unit with standard lamp socket thread, such as is used in electric heaters of the reflector type.

Received January 29, 1937.

[1] Present address, United Gas Improvement Co., 319 Arch St., Philadelphia, Pa.

Determination of Small Quantities of Oxygen in Gases and Liquids

I. J. W. MACHATTIE AND J. E. MACONACHIE, Ontario Research Foundation, Toronto, Canada

Oxygen in gaseous mixtures and dissolved in liquids can be accurately determined in small quantity by absorption on copper wetted with an ammoniacal solution of ammonium chloride, the resulting oxide being dissolved in the same solution, and the copper derived being estimated by titration of a blank to the same depth of blue color. The arrangement of apparatus described is capable of measuring oxygen with an accuracy of 3 per cent in amounts from 0.02 to 2 ml. No interference is caused by gases usually encountered, and determinations are made at a rate of four in an hour.

IN THE control of furnace atmospheres, in hydrogenation processes, and in catalytic syntheses, there has developed a need for a simple and rapid method of determining oxygen in gaseous mixtures in concentrations much lower than those that are accurately measured by analysis apparatus of the Orsat type. The method described here has been found capable of measuring oxygen with good accuracy at any concentration down to 20 parts per million, and permits of three or four determinations in an hour. The apparatus is simple and lends itself readily to series of many determinations as in control work. The method is offered also as an alternative to the manganous hydroxide method of determining oxygen dissolved in water, with the advantages of requiring less time and smaller samples, with no less accuracy.

Principle of the Method

Hempel (*3*) described a reagent for the quantitative absorption of oxygen that consisted of an ammoniacal solution of ammonium carbonate in contact with metallic copper. Haehnel and Mugdan (*2*) preferred an ammoniacal solution of ammonium chloride on account of its lower ammonia vapor pressure. The absorptive powers of reduced copper solutions were investigated by Badger (*1*), who recommended a solution consisting of equal parts of concentrated ammonia and of water, the mixture saturated with ammonium chloride, and who remarked that oxygen was not completely removed unless some metallic copper were left uncovered by the solution. The procedure that has been developed in this laboratory is based on the use of copper for removing traces of oxygen from commercial nitrogen, made by Van Brunt (*4*), and avoids the difficulties inherent in exact measurements of volume as required by the usual methods of gas analysis.

Oxygen is absorbed on a surface of copper wetted with a solution of ammonium chloride and ammonia, the resulting oxide is washed off with the same solution, and the copper in the washings is determined by a colorimetric titration. The amount of oxygen is calculated by the use of a conversion factor which is independent of concentration.

Apparatus

The principle of the method may be incorporated in different designs of apparatus suited to particular purposes. The arrangement illustrated (Figure 1) and described here was used in the investigation of the possibilities of the method and for determinations of oxygen in the atmosphere of an industrial heat-treating furnace.

The analysis cell, 1, of about 25-ml. volume, is filled with short lengths of 22-gage copper wire supported by a constriction at 2. All-glass capillary (1-mm. bore) connections lead to the 250-ml. gas-sampling tube, 3, through the 3-way stopcock, 4, to the atmosphere through stopcocks 5 and 6, to the wash-solution reservoir, 7, through stopcock 8, and at position 9 through stopcock 10, and finally to a source of oxygen-free nitrogen at position 9. The wash-solution reservoir, 7, is filled with a solution made by mixing equal volumes of a saturated solution of ammonium chloride and concentrated aqua ammonia, and is provided with a water-sealed outlet. The gas-sampling tube, 3, may be filled with mercury through stopcock 11 by raising the leveling bulb. A second 3-way stopcock, 12, allows the sampling tube to be filled with the gas or liquid to be analyzed, or to be exhausted to the atmosphere. For the sake of convenience a by-pass has been inserted with stopcocks 13 and 14 by which mercury may be run into the sampling tube at any desired rate. This rate is controlled by adjustment of stopcock 14, which once set is left alone, and the mercury is turned off or on by stopcock 13. Stopcock 15 leads to a constricted jet at 16, by which means a small amount of mercury may be withdrawn and weighed when it is desired to draw into the sampling tube a known volume of air for calibration purposes.

Oxygen-free nitrogen is obtained by passing the commercial article through the copper turnings in the bulb, 17, which are kept wetted with ammoniacal ammonium chloride solution by the operation of the lift pump, 18, to which the flow of solution is regulated by the screw clamp, 19. During use, nitrogen is drawn from the cylinder at the rate of 3 to 4 liters per hour, and the flow is cut down almost to zero during other times.

Method of Operation

When not in use the apparatus is left under a pressure of nitrogen, with the analysis cell and sampling tube empty of liquid, stopcock 10 open, all others closed, and 4 open between the cell and the sampling tube. Nitrogen then passes out through 9 and bubbles through the solution in 7, keeping it oxygen-free. In a small room a strong smell of ammonia may be avoided by acidifying the water in the outlet seal.

Before a series of determinations, the absence of oxygen in the system is tested by a blank determination with nitrogen in exactly the same way described below for the analysis of a gaseous sample. The nitrogen in 3 is expelled through 4 and 12 by opening 11 and raising the leveling bulb until the mercury reaches stopcock 12. The sample, containing less than 2 ml. of oxygen, is drawn in through 12 by lowering the mercury and 4 is opened to the cell. Stopcock 11 is closed and the mercury reservoir is raised to the height of stopcock 4 and converted to a Mariotte bottle by inserting a stopper in its neck with a glass tube reaching nearly to the bottom of the bulb. With 14 adjusted to pass mercury at a rate of 25 ml. per minute, 13 is opened, 5 is opened, and 10 is closed. The sample of gas then passes through the cell and is vented at 5.

When the sample has been driven past 4, that stopcock is closed and 10 is opened, and the cell is swept with nitrogen for 2 minutes. Stopcock 5 is then closed, 8 is opened, and 100 ml. of wash solution are drawn off through 6 into a 100-ml. Nessler tube. A second Nessler tube is nearly filled from 5 by closing 6 and opening first 5 and then 8, after which these are closed and the apparatus is ready for the introduction of the next sample. Care should be exercised that mercury is not carried over from the sampling tube to the analysis cell. Should this occur, the use of the cell need not be discontinued at once, as the copper is not immediately affected, but amalgamation will so lower the activity of the copper within a few days that the replacement of the copper turnings will be necessary.

If the sample contained oxygen, the contents of the first Nessler tube, taken from 6, will be colored blue in comparison with the liquid in the second, owing to copper derived from the

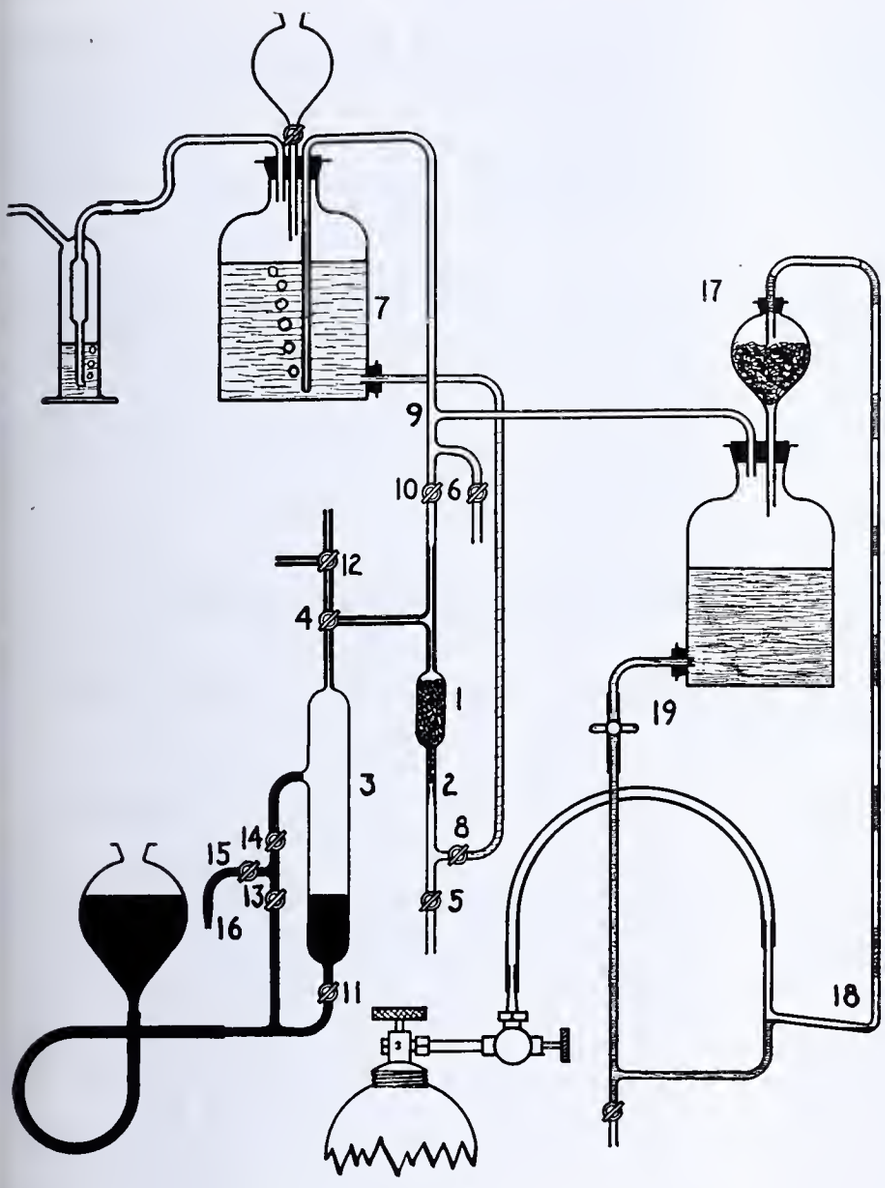

FIGURE 1. DIAGRAM OF APPARATUS

cell. The amount of this copper is proportional to the oxygen that was passed through the cell, and provides the means of measuring it. To the second Nessler tube, a standard solution of copper is added from a buret until the depth of blue color is the same in the two tubes, and the amount of oxygen in the sample is calculated from the volume of copper solution added. A blank determination on the oxygen-free nitrogen should yield a result of less than 0.002 per cent of oxygen.

Estimation of Copper

A method based on the blue color of the cupric ion in ammoniacal solution was chosen as the most convenient method of analysis of the wash solution after the examination of several other methods, and yields results of sufficient accuracy with only a few simple precautions. The color does not develop completely until the solution is exposed to air and cuprous ions are oxidized; consequently the solution is thoroughly stirred before comparison is made. The concentration of ammonia and ammonium chloride must be nearly the same in the tubes being matched; otherwise there will be a difference in color which will make judgment of intensity difficult.

The tubes are viewed lengthwise from above, and illuminated nearly equally from below. An inclined mirror receiving light through a frosted-glass screen from a 60-watt light is used in this laboratory. Most people judge a color to be deeper on one side than the other, so that the tubes should be switched about, right to left, several times in making a comparison. Matching is easiest when the solutions contain about 2 mg. of copper. If this be exceeded, an aliquot should be taken and diluted with wash solution to the original volume. It is convenient to use a standard copper solution containing between 0.1 and 0.2 mg. of copper per ml. in a 25-ml. buret. Matching may easily be carried out to a precision of 0.2 ml. of such a solution, corresponding to 0.002 to 0.004 ml. of oxygen.

Constancy of Copper-Oxygen Ratio

In developing the method the authors aimed at securing a ratio between the amount of copper determined in the wash solution and the amount of oxygen taken in the sample that would correspond to the formula Cu_2O; that is, 11.36 mg. of copper per ml. of oxygen (0° C., 760 mm.). The ratio found was affected by the rate of passage of the gas sample over the copper, by the manner of washing the cell afterwards, and by the concentration of the wash solution. The procedure, described above, yielded a ratio of 10.45 mg. of copper per ml. of oxygen, which ratio was found to be independent of the concentration of oxygen in the sample for amounts of oxygen ranging from 0.02 to 2 ml. A calibration curve was therefore unnecessary, the ratio 10.45 being used as a straight conversion factor. The degree of precision with which this factor was reproduced in test determinations may be seen in Table I.

Tests 11 to 18 were carried out by an operator who had no previous experience with either the apparatus or the method.

Interference from Other Gases

The method is very specific for oxygen, so that in nearly all cases no preliminary treatment of the raw sample is necessary. The reaction between copper and oxygen is quantitative in the presence of any concentrations of hydrogen, carbon monoxide, carbon dioxide, methane, ethylene, benzene, and their homologs. Sulfur dioxide interferes only in concentrations greater than 10 per cent of a 250-ml. sample. Small amounts of hydrogen sulfide and carbon bisulfide are admissible, but in

TABLE I. DETERMINATIONS OF COPPER-OXYGEN RATIO

(Total volume of each sample, 270 ml. Standard copper solution, 0.138 mg. per ml.)

Test No.	Oxygen Taken[a]	Copper Found	Copper-Oxygen Ratio	Oxygen Found R = 10.45
	Ml.	*Mg.*	*Mg./ml.*	
1	0.0598	0.629	10.52	0.0602
2	0.0733	0.758	10.34	0.0725
3	0.109	1.14	10.46	0.109
4	0.178	1.91	10.73	0.183
5	0.266	2.77	10.41	0.265
6	0.353	3.69	10.45	0.353
7	0.781	8.07	10.33	0.773
8	1.62	16.9	10.43	1.62
9	2.41	24.8	10.28	2.37
10	4.73	48.2	10.19	4.62
		Av. (1 to 8)	10.46	
11	0.145	1.48	10.21	0.142
12	0.235	2.51	10.67	0.240
13	0.325	3.42	10.52	0.328
14	0.531	5.50	10.36	0.526
15	0.626	6.52	10.41	0.624
16	0.694	7.28	10.49	0.697
17	1.22	12.7	10.44	1.22
18	1.41	14.8	10.46	1.41
			Av. 10.44	

[a] 0° C., 760 mm.

large quantities these gases impart a yellow color to the wash solution which interferes with the matching of the blue color. This interference may be avoided by using, for comparison, a yellow blank obtained by passing the gas over the copper in the cell after the removal of oxygen. If the copper in the cell becomes blackened by sulfide, it may be cleaned by drawing into the cell a dilute solution of nitric acid.

Determination of Dissolved Oxygen

For the determination of dissolved oxygen a sample of liquid containing about 0.1 ml. of oxygen is drawn directly into the sampling tube on top of the mercury. The analysis cell is filled with wash solution up to stopcock 10, which is then closed, 5 is opened, and the sample is passed through the flooded cell at a rate of 10 ml. per minute. The mixture of water and wash solution is caught in a Nessler tube at 5, and made up to 100 ml. with wash solution which is used to rinse the cell after the sample has been passed. If the sample is greater than 50 ml., the passage through the copper is interrupted halfway, and the cell is drained and refilled with fresh wash solution. The blank solution used for comparison should contain a volume of water equal to that of the sample, in order to keep the concentration of the solutions nearly the same. In calculating results, the same conversion factor is used as for the gaseous samples. The method is obviously not applicable to strongly acid liquid samples.

Literature Cited

(1) Badger, W. L., J. Ind. Eng. Chem., **12**, 161 (1920).
(2) Haehnel and Mugdan, *Z. angew. Chem.*, **33**, 35 (1920).
(3) Hempel, "Gasanalytische Methoden," p. 142, 1900.
(4) Van Brunt, *J. Am. Chem. Soc.*, **36**, 144 (1914).

Received May 15, 1937. Part of the work of a research fellowship supported by the Consumers' Gas Company of Toronto.

Graphic Analysis of Hydrocarbon Oils

Volume–Physical Constants Relationship Resulting from Successive Extractions with Sulfuric Acid

C. H. FISHER and ABNER EISNER, Pittsburgh Experiment Station, U. S. Bureau of Mines, Pittsburgh, Pa.

SULFURIC acid of various concentrations has long been used as a reagent in determining the composition of hydrocarbon oils, such as gasoline, kerosene, and neutral oils from coal-tar distillates. Although differing in details, most of these procedures (*4*, *9*) employ two concentrations of sulfuric acid and follow the outline given below. Extraction of the oil with the acid of lower concentration (usually 80 to 92 per cent), followed by distillation to remove olefin polymers, is recommended for the estimation of unsaturated hydrocarbons. The distillate obtained in this manner is taken as olefin-free oil and used in the second stage of the analysis. Aromatic hydrocarbons usually are determined in the olefin-free oil by sulfuric acid of higher concentration (96 to 100 per cent and fuming acid are recommended), the oil not removed as water-soluble sulfonic acids being considered as saturated hydrocarbons. Although this procedure for analyzing hydrocarbon oils has been studied and used extensively, it is generally agreed that methods of this kind are not very satisfactory.

Since attempts to devise improved modifications of the analytical procedure described above have been disappointing, it appeared that a study directed to methods of another type might be profitable. The graphic method of characterizing hydrocarbon oils described in the present paper, developed during a recent investigation (*2*) of sulfuric acid extraction methods of determining olefins and aromatics, is a departure from the usual type of sulfuric acid method and has several interesting advantages. The new method is based on the changes in physical constants that accompany the stepwise removal of olefins and aromatics, as effected by successive extractions with several sulfuric acid solutions. As is shown below, a hydrogenated-coal distillate and two synthetic solutions were analyzed more accurately and characterized more completely by this method than by several methods of the older type.

Materials and Procedure

In most cases the concentrated sulfuric acid solutions were analyzed by titration, the more dilute acid solutions by the specific gravity method. Some of the hydrocarbons used in the preparation of synthetic solutions were purified by washing with sulfuric acid and distillation. Hydrocarbons available in good grades were used as purchased. Diamylene (commercial grade) was purified by distillation through a six-ball Snyder column, only the middle fraction being retained. This left in the diamylene an impurity which could be removed by washing with 80 per cent sulfuric acid. Bromine number determinations, as carried out by Francis (*3*), were made to ascertain the purity of most of the olefins.

Details of the Morrell-Levine (*10*), Towne (*12*), and Kester-Pohle (*6*) methods used to analyze the synthetic solutions of Table II may be obtained from the original articles. Procedures not previously reported are described in appropriate places in the text.

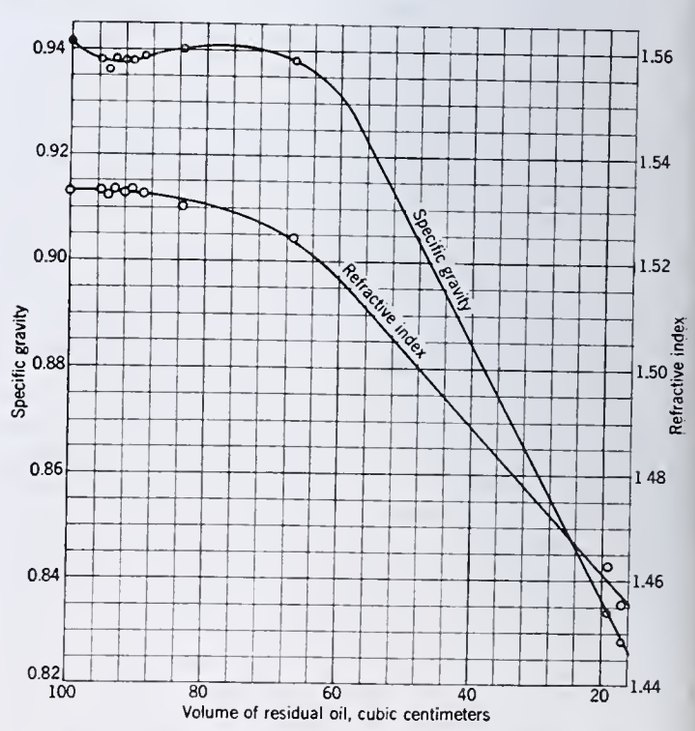

Figure 1. Physical Constants and Volume of Residual Oil (Hydrogenated Coal Distillate)

Characterization of Oils by the Volume–Physical Constants Relationship

The method developed in the present work consists in washing the oil successively with sulfuric acid solutions of increasing concentration and determining each time the volume, specific gravity, and refractive index of the unsulfonated oil. The olefin and aromatic contents are then ascertained by plotting volumes of residual oil against the corresponding physical constants. The behavior of the oil and the changes in physical constants during these washings with sulfuric acid are as follows: Treatment initially with dilute sulfuric acid and later with acid of higher concentration removes olefins and aromatics progressively, the olefins being first extracted. As the olefins are removed the concentration of aromatics in the residual oil is increased and, as a result, the physical constants (specific gravity and refractive index) observed are higher. The maximum values are reached at the stage of complete removal of olefins (some unreactive olefins may be present) and incipient extraction of aromatics. The volume loss occurring to the point of maximum physical constants is taken as the olefin content.

TABLE I. PHYSICAL CONSTANTS OF RESIDUAL OIL FROM SULFONATION OF HYDROGENATED-COAL DISTILLATE

Concentration of H_2SO_4 %	Volume of Residual Oil Cc.	Sp. Gr. at 15.5° C.	Refractive Index at 15.5° C.	Refractivity Intercept, $n - \frac{d}{2}$	Specific Refraction, $\frac{n-1}{d}$
(Original oil)	100	0.941	1.5335	1.063	0.567
75	95.5	0.938	1.5340	1.065	0.569
77	94.5	0.936	1.5325	1.065	0.569
80	93.5	0.938	1.5340	1.065	0.569
82	92.0	0.938	1.5330	1.064	0.569
84.5	91.0	0.938	1.5340	1.065	0.569
87	89.0	0.939	1.5333	1.064	0.568
90	83.5	0.940	1.5309	1.061	0.565
93	67.0	0.937	1.5248	1.056	0.560
96	19.0	0.834	1.4624	1.045	0.554
98	17.0	0.827	1.4555	1.042	0.551

In the second stage of the analysis the sulfuric acid of higher concentration removes the aromatics, causing the physical constants to fall until the removal of aromatics is complete, when the constants observed are those of the residual naphthenes and paraffins. Treatment with strong sulfuric acid beyond this point has not been studied extensively, but it is known that the volume of oil and physical constants are little changed by further treatment unless the reagent is fuming sulfuric acid. The aromatic content of the original oil is represented by the volume loss occurring between the point of maximum values for physical constants, observed at the beginning of the extraction of aromatics, and the point at which the physical constants become approximately constant because of the complete removal of aromatics. This procedure and its application to neutral oil analysis are clarified by an examination of the curves obtained in the present work (Figures 2, 3, and 4).

This method of examining hydrocarbon oils may overcome some of the difficulties attending the use of previous methods, such as the interaction of olefins and aromatics, extraction of aromatics before olefin removal is complete, etc. It has been shown (*5*) that dilute sulfuric acid dissolves olefins, moderately concentrated acid polymerizes olefins, and more concentrated acid causes olefins to condense with aromatic hydrocarbons. The concentrations of acid required to bring about these reactions vary according to the olefins present. It follows, therefore, that repeated washing with acid solutions of increasing concentration should give all olefins an opportunity to dissolve, since each olefin, regardless of its reactivity, is at some time in contact with acid of favorable concentration. In the older type of analysis the one concentration of acid used as olefin reagent simultaneously causes dissolution, polymerization, condensation with aromatics and, for some unreactive olefins, no attack at all.

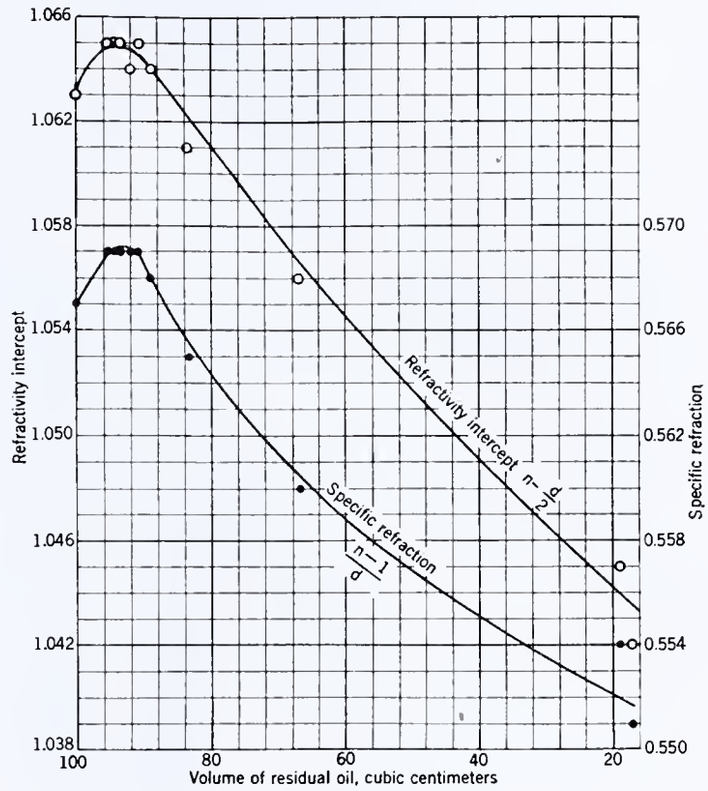

FIGURE 2. VOLUME, SPECIFIC REFRACTION, AND REFRACTIVITY INTERCEPT OF RESIDUAL OIL (HYDROGENATED COAL DISTILLATE)

Another advantage of the graphic analysis method is the fact that the nature of the constituents, as well as the quantities, is indicated. An inspection of the curves or calculations (see Table IV) makes it possible to draw conclusions as to the physical constants, and hence the characteristics, of the olefins, aromatics, and saturated hydrocarbons in the oil. For example, the curves may be quite different in shape and position although the maximum and minimum physical constants occur at corresponding volumes of residual oils. This makes possible a further characterization of hydrocarbon oils of the same olefin and aromatic contents that would appear to be identical by the usual sulfuric acid analysis.

The volume losses and changes in physical constants caused by washing a neutral hydrogenated-coal distillate (initial volume, 100 cc.) successively with various sulfuric acid solutions are shown in Table I. The acid solutions ranged in concentration from 75 to 98 per cent by weight. The same procedure, agitation for 5 minutes in a separatory funnel with three volumes of acid, was employed in each washing. From the data obtained in the present work and in a previous investigation (*11*) (see Figure 4) it appears that about ten treatments with sulfuric acid afford data sufficient to characterize both coal-tar and petroleum oils. The relationship between the volume and physical constants of the unsulfonated oil is shown by Figure 1. The specific refractions (Gladstone-Dale) and refractivity intercepts, calculated by the formula of Kurtz and Ward (*7*), were also plotted against the volumes (Figure 2).

An inspection of Figures 1 and 2 shows that the refractive index, specific refraction, and refractivity intercept reached their highest values when the volume of the residual oil was about 93 to 94 cc. The olefin content thus indicated is 6 to 7 per cent, a value in good agreement with the analyses described in Table VI. As the washings with sulfuric acid were not continued beyond the extraction of aromatics (and the incipient removal of saturates), it was not demonstrated that

Table II. Composition of Synthetic Solutions

Constituent	Amount of Constituent Solution 1[a]	Solution 2[b]
	Cc.	*Cc.*
Olefin mixture[c]	300	300
Diamylene	...	200
p-Cymene	25	25
Ethylbenzene	25	25
Diethylbenzene	25	25
Benzene	625	625
Toluene	700	600
Decahydronaphthalene	150	100
Heptane	150	100

[a] 15 per cent olefins, 70 per cent aromatics, 15 per cent paraffins.
[b] 25 per cent olefins, 65 per cent aromatics, 10 per cent paraffins.
[c] 9 cc. diisobutylene, 26.5 cc. styrene, 33.5 cc. octylene, 156 cc. cyclohexene, 178 cc. pinene, and 238 cc. dipentene.

Table III. Volume and Physical Constants of Residual Oil from Sulfonation of Synthetic Solutions

	Solution 1 (15 Per Cent Olefins)			Solution 2 (25 Per Cent Olefins)		
Concn. of H_2SO_4	Volume of residual oil	Refractivity intercept	Specific refraction	Volume of residual oil	Refractivity intercept	Specific refraction
%	*Cc.*			*Cc.*		
(Orig. oil)	(100)	1.0535	0.563	(100)	1.0508	0.560
75	94	1.0554	0.565	93.5	1.0525	0.562
77	91	1.0553	0.565	91	1.0541	0.564
80	87	1.0550	0.564	87.5	1.0548	0.564
82	83.5	1.0565	0.566	83	1.0538	0.5645
84.5	80	1.0555	0.565	79	1.0550	0.565
87	77.5	1.0557	0.565	75	1.0586	0.569
90	71	1.0547	0.564	70	1.0582	0.568
93	50	1.0527	0.562	53	1.0528	0.562
96	30	1.0534	0.5635	35.5	1.0518	0.561

the physical constants had attained constant values. However, the removal of aromatics, almost complete after the treatment with 96 per cent acid, must have been thorough after the final washing with 98 per cent acid (*2*). Therefore, the oil remaining consisted of saturated hydrocarbons, and its volume may be taken as the paraffin and naphthene content of the original oil. The value (17 per cent) thus obtained for the saturated hydrocarbons and the aromatic content calculated by difference (76.5 per cent) agree well with analyses made by another method (Table VI).

A better test of the accuracy of the graphic method was afforded by the analysis of two synthetic solutions of known composition. In order that the synthetic solutions might resemble the complex neutral oils obtained from coal, the aromatic contents were made high, and several different representatives of each hydrocarbon group were included. Relatively reactive olefins were employed in solution 1, while solution 2 (Table II) contained a considerable quantity of an unreactive olefin (diamylene) as well as unsaturated hydrocarbons more easily attacked by sulfuric acid. Diamylene recently has been demonstrated (*1*) to consist of the two olefins:

$$CH_3CH{=}C(CH_3)CH_2\ C(CH_3)_2CH_2CH_3$$
$$CH_3CH{=}C(CH_3)\ CH(CH_3)\ C(CH_3)_2\ CH_3$$

In spite of the high aromatic contents and the presence of an unreactive olefin in solution 2, very satisfactory results were obtained by the graphic method. Although the observed values for specific gravity (hydrometer) and refractive index were not corrected for temperature, these data (Table III) were sufficient to indicate the olefin contents (15 and 25 per cent) of the synthetic solutions with considerable accuracy. The relationships among volume of unsulfonated oil, refractivity intercept, and specific refraction (Gladstone-Dale) are shown in Figure 3. The sulfuric acid treatments were not continued long enough to remove all the aromatics; this is indicated by the physical constants of the oil remaining after the last washing.

It may be observed from the data in Table III that the volumes of oil removed from the synthetic solutions by any one concentration of acid are almost identical. If, as in most sulfuric acid methods, the physical constants were not considered, it might be concluded that both solutions have similar olefin and aromatic contents (see also the analyses in Table V). Since the maximum values for physical constants occur at distinctly different points (75 and 85 cc. of unsulfonated oil), the olefin contents must be considerably different and the graphic method is therefore to be preferred to the older methods for these solutions.

Data obtained previously by Ormandy and Craven (*11*) with two gasolines may be plotted as previously (Figures 1 to 3) to ascertain the concentration of olefins and aromatics. These data are interesting because the oils studied, being derived from petroleum, are different in composition from the highly aromatic oils considered above.

The English investigators employed an extraction procedure very similar to that used with the hydrogenated-coal distillate (Table I) and synthetic solutions 1 and 2 (Table II). The oil (50 cc.) was shaken mechanically for 0.5 hour with 150 cc. of acid (79 to 100.5 per cent) and allowed to stand for 20 hours. The residual oil was separated from the acid layer and weighed. The fact that this procedure differs slightly from that used in the present work is unimportant, since such differences should have little or no effect on the volume-physical constants relationship.

Comparison of the curves (Figures 4 and 5) showing the relationships between the volumes and physical constants indicates that these petroleum oils are different from oils derived from coal. Consideration of the volumes corresponding to the maximum and minimum physical constants (especially the refractivity intercept which reaches a minimum when aromatics are completely removed) warrants the conclusion that the olefin and aromatic contents are 1.5 and 6.5 per cent and 5 and 14 per cent, respectively, for gasolines 1 and 2.

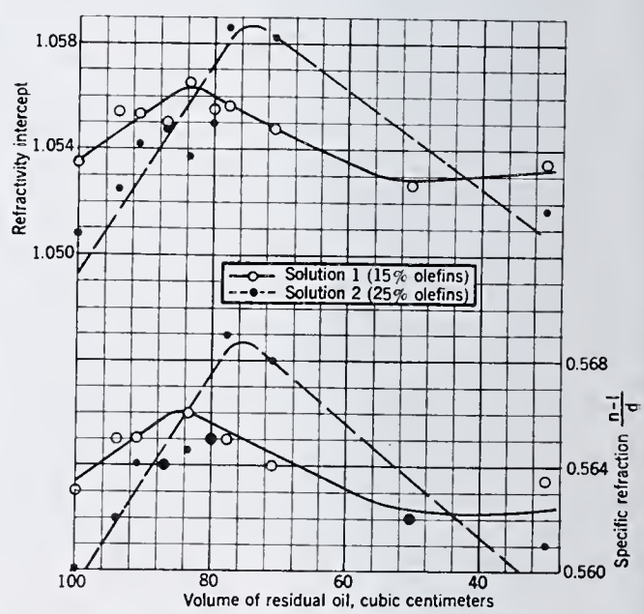

Figure 3. Volume, Specific Refraction, and Refractivity Intercept of Residual Oil (Synthetic Solutions)

The stage corresponding to complete olefin removal for gasoline 2 is not sharply defined by the volume–refractivity intercept curve (Figure 5). Hence the olefin content of gasoline 2 probably is shown better by the volume-density and volume–refractive index curves (Figure 4), which have sharp peaks in the region of maximum olefin removal. Conversely, the olefin content of the hydrogenated-coal distillate is best indicated by the volume–refractivity intercept and volume–specific refraction curves (Figure 2).

To obtain the data for gasoline 2 (Figures 4 and 5) Ormandy and Craven (*11*) used sulfuric acid of the following concentra-

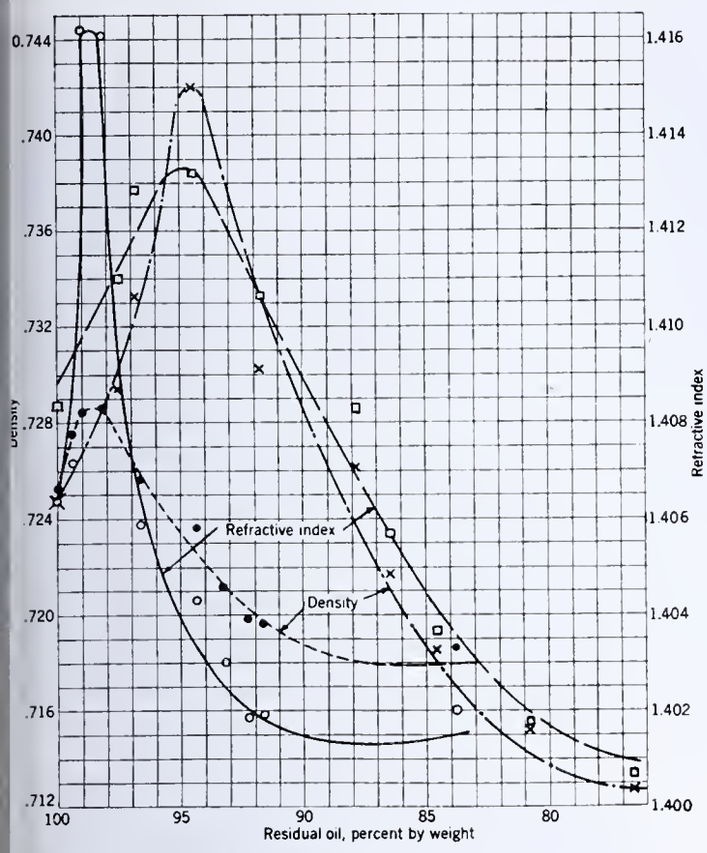

IGURE 4. VOLUME AND PHYSICAL CONSTANTS OF RESIDUAL IL FROM SULFONATION OF TWO GASOLINES (ORMANDY AND CRAVEN)

ions (per cent by weight): 79.1, 84.2, 89.5, 91.9, 94.5, 96.2, 7.7, 99.7, and 100.5. In a similar experiment the same gasoline as washed twice (instead of once as in previous cases) with ach of the following sulfuric acid solutions (per cent by eight): 80.2, 84.9, 90.1, 91.9, 93.7, 95.8, 97.8, 99.6, and 00.2. Volume–physical constant curves drawn from the ata thus obtained were found to be almost identical with the orresponding curves for gasoline 2 in Figures 4 and 5. This ndicates that slight differences in procedure and acid conentration are unimportant.

The data obtained by extracting olefins and aromatics rogressively in the manner described above may be used to alculate the physical constants of the constituents thus reoved. The calculations are made on the experimentally upported (*8*) assumption that the physical constants are dditive on a percentage basis.

ABLE IV. PHYSICAL CONSTANTS OF OLEFINS AND AROMATICS REMOVED WITH SULFURIC ACID

Oil Treated	Constituent Removed	Sulfuric Acid Treatment: Oil used	Residual oil	Oil removed	Physical Constants of Oil Removed (Calculated): Sp. gr.	Refractive index	Refractivity intercept
		%	%	%			
Hydrogenated coal	Olefins	100	95.5	4.5	1.005	1.523	1.021
	Olefins	95.5	94.5	1.0	1.127	1.676	1.113
	Aromatics	67.0	19.0	48.0	0.9778	1.5495	1.0606
Gasoline 1	Olefins	100	99.0	1.0	0.500	0.4362	0.186
	Aromatics	98.1	92.2	5.9	0.8644	1.6395	1.2073
	Aromatics	96.6	92.2	4.4	0.8472	1.4896	1.0660
Gasoline 2	Olefins	100	96.9	3.1	0.461	1.27	1.04
	Aromatics	94.5	84.6	9.9	0.8684	1.4944	1.0602
	Aromatics	91.8	84.6	7.2	0.8677	1.4917	1.0579

The calculated constants for the olefins and aromatics removed with sulfuric acid from a neutral hydrogenated-coal distillate (graphic analysis in Figure 2) and two petroleum light oils (Figures 4 and 5) are given in Table IV. Some of the constants calculated for the olefins obviously are incorrect. This is due partly to the fact that the changes in volumes and constants were small and hence not as satisfactory for calculations as the large changes observed during the removal of aromatics.

From Table IV it appears that the constants for the aromatics may be calculated with reasonable accuracy, especially if the data used are those obtained when only aromatics are being removed (presumably after the extraction of the first 10 to 15 per cent and before the extraction of the last traces of aromatics). This is illustrated by the two series of constants in Table IV calculated for the aromatics in gasoline 1. The first series of constants, calculated for a weight-per cent change of 5.9, is inaccurate, while the constants calculated for a weight–per cent change of 4.4 agree with those to be expected.

It is interesting to note that, although the constants of the aromatics from the hydrogenated-coal distillate are considerably higher than those of the lower-boiling petroleum oils, the refractivity intercepts are about the same (approximately 1.060). Kurtz and Ward (*7*) have given 1.0627 as the refractivity intercept of aromatic hydrocarbons. The aromatics in the hydrogenated-coal distillate boil up to 350° C. and undoubtedly are the highly condensed type usually found in oils derived from coal. Hence its physical constants should be higher than those observed in the case of aromatics of lower molecular weight found in light oils from petroleum. The data in Table IV are in agreement with this expectation.

Analyses with Other Sulfuric Acid Methods

The two synthetic mixtures described in Table II were analyzed by several sulfuric acid methods of the conventional type to compare these methods with each other and with the graphic method considered above.

TABLE V. ANALYSES OF SYNTHETIC SOLUTIONS

(Volume per cent)

Method of Analysis	Solution 1: Olefins 15%	Aromatics 70%	Paraffins 15%	Solution 2: Olefins 25%	Aromatics 65%	Paraffins 10%
Morrell and Levine	23.4	66.6	10	36.8	56.2	7.0
	24.3	65.2	10.5	36.0	56.5	7.5
Towne	30	55	15	30	59.5	10.5
	29	57	14	31	59	10
Kester and Pohle	16	69.3	14.7	18	68.8	13.2
	17	68.6	14.4	18	70.4	11.6

All the methods thus studied include distillation to remove olefin polymers but are unlike in several minor points. No one method was found to be completely satisfactory for both synthetic solutions. The Kester and Pohle method (*6*) was accurate only for solution 1, which contained reactive olefins. The other methods gave high values for olefins and low values for aromatics.

The high olefin values obtained by the Morrell and Levine method (olefins determined with 91 per cent acid and distillation) indicate that the distillation residue was too great for substitution in their empirical formulas (*10*). The large distillation residue probably was due to the formation of high-boiling alkylated aromatics. Petroleum distillates containing small amounts of aromatics might yield only negligible amounts of such condensation products when treated with 91 per cent acid, but the formation of considerable amounts of alkylated aromatics is to be expected in aromatic-rich synthetic solutions and coal-tar oils.

Towne (*12*) extracted olefins with 93 per cent acid which had been cooled previously to 1.67° C. (35° F.). Another sample of oil was then treated with 98 per cent acid and distilled to the original end point. From the data obtained the olefin and aromatic contents were calculated. The data in Table V indicate that aromatics were removed along with the olefins in the treatment with 93 per cent sulfuric acid. This is not astonishing in view of the high aromatic contents of the synthetic solutions and the tendency of 93 per cent acid to sulfonate aromatic hydrocarbons (*2*).

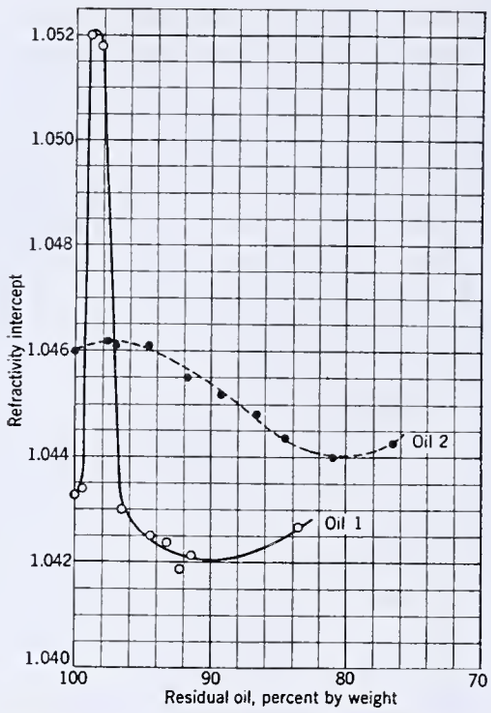

FIGURE 5. VOLUME AND REFRACTIVITY INTERCEPT OF RESIDUAL OIL FROM SULFONATION OF TWO GASOLINES (ORMANDY AND CRAVEN)

The results obtained with the Kester and Pohle method (*6*) indicate that their olefin reagent (80 per cent sulfuric acid) is satisfactory for neutral oils of the type obtained from coal if only small quantities of unreactive olefins are present. With solutions containing appreciable amounts of unreactive olefins, it is probable that low olefin and high aromatic values would result. Since there is no evidence for the presence of large quantities of unreactive olefins in coal-tar oils (known to have high aromatic contents), the Kester and Pohle analysis is to be preferred to the other methods of this type that employ concentrations of sulfuric acid much over 80 per cent as olefin reagents.

The hydrogenated-coal distillate characterized by the graphic method (Figure 2) was analyzed also by the Kester and Pohle procedure (*6*). Since there is some question as to the optimum concentration of acid for determining olefins by this type of method, several determinations, differing only in the concentration of olefin reagent, were made. The procedure used was as follows:

Fifty cubic centimeters of oil were shaken for 5 minutes with three volumes of the olefin reagent (80, 82, 84.5, or 87 per cent sulfuric acid). The oil not dissolved by this treatment was distilled to a temperature 5° above the original end point through a Vigreux column, all volume measurements being made in a cylinder graduated to 50 cc. in 0.5-cc. subdivisions. The olefin-free oil thus obtained was shaken for 5 minutes with three volumes (60 cc.) of 98 per cent sulfuric acid to extract the aromatics. In three of the olefin analyses (3, 4, and 5, Table VI) the oil was washed twice with two different sulfuric acid solutions before being distilled.

The data (Table VI) show that similar olefin values were obtained with all the olefin reagents except 87 per cent acid. Since 87 per cent acid may sulfonate appreciable quantities of aromatics (*2*), the olefin values obtained with this reagent probably are high. The other analytical data in Table VI agree very well with the analysis carried out by the graphic method (Figure 2).

Summary and Conclusions

A graphic method of characterizing hydrocarbon oils, based on changes in volume and physical constants caused by the progressive removal of olefins and aromatics, has been developed. The density and refractive index rise to maximum values at the point of complete olefin and incipient aromatic removal. Beyond this point the values fall as the aromatics are removed, becoming approximately constant when the residual oil consists only of saturated hydrocarbons. The olefin content is indicated by the volume change to the point of maximum values for physical constants, the aromatic content by the volume change from maximum physical constants to the point of complete extraction of aromatics (constants little changed by further treatment with sulfuric acid). The olefin and aromatic contents of three oils were determined accurately by this method. Whether or not the points of maximum and minimum physical constants always indicate the olefin and aromatic contents precisely, this method affords a good characterization of neutral oils and should be useful for comparative purposes.

The data obtained during the progressive removal of olefins and aromatics, as described above, may be used to calculate the physical constants of some of the constituents removed by sulfuric acid treatment. In the present work such calculations demonstrated that the aromatics from a high-boiling hydrogenated-coal distillate had higher physical constants than the aromatics from two petroleum gasoline fractions.

TABLE VI. ANALYSES OF NEUTRAL OIL FROM A HYDROGENATED-COAL DISTILLATE

No.	Concn. of H_2SO_4 in Olefin Determination	Per Cent by Volume		
		Olefins	Aromatics	Paraffins
1	80	5.5	74.8	19.7
2	82	6	77	17
3	80 then 82	6	75	19
4	80 then 84.5	7	75	18
5	80 then 87	9	74.2	16.8
6	84.5	7	76.4	16.6
7	87	8	75.9	16.1

Using two synthetic solutions which had been analyzed accurately by the graphic method, several previously described sulfuric acid methods for determining olefins and aromatics were compared. Although no one method was completely satisfactory, the Kester and Pohle procedure (olefins determined with 80 per cent sulfuric acid) gave the most accurate results.

Acknowledgment

The authors are grateful to H. H. Storch for his kind interest and helpful suggestions in the preparation of the manuscript.

Literature Cited

(1) Drake, N. L., Kline, G. M., and Rose, W. G., *J. Am. Chem. Soc.*, **56**, 2076–9 (1934).
(2) Fisher, C. H., and Eisner, Abner, "Sulfuric Acid Extraction Methods for Determining Olefins and Aromatics in Hydrocarbon Oils: Optimum Conditions and Concentrations of Acid;" in press.
(3) Francis, A. W., IND. ENG. CHEM., **18**, 821–2 (1926).
(4) Howes, D. A., *J. Inst. Petroleum Tech.*, **16**, 54–88 (1930).
(5) Ipatieff, V. N., Carson, B. B., and Pines, H., *J. Am. Chem. Soc.*, **58**, 919–22 (1936).
(6) Kester, E. B., and Pohle, W. D., IND. ENG. CHEM., Anal. Ed., **3**, 294–7 (1931).
(7) Kurtz, S. S., Jr., and Ward, A. L., *J. Franklin Inst.*, **222**, 563–92 (1936).
(8) MacFarlane, W., and Wright, R., *J. Chem. Soc.*, **1933**, 114–18.
(9) Morrell, J. C., and Egloff, G., *Nat. Petroleum News*, **28**, No. 12, 33 (1936).
(10) Morrell, J. C., and Levine, I. M., IND. ENG. CHEM., Anal., Ed., **4**, 321–2 (1932).
(11) Ormandy, W. R., and Craven, E. C., *J. Inst. Petroleum Tech.*, **12**, 68–76 (1926).
(12) Towne, C. C., *Ibid.*, **17**, 134–41 (1931).

RECEIVED June 9, 1937. Published by permission of the Director, U. S. Bureau of Mines. (Not subject to copyright.)

Arsenate Method for the Determination of Zirconium

WALTER C. SCHUMB AND EDWARD J. NOLAN,[1] Massachusetts Institute of Technology, Cambridge, Mass.

HE well-known phosphate method for the determination of zirconium has been extensively employed under a wide ariety of experimental conditions (*4, 7, 15*), but if high acuracy is desired and proper provision is made for the eliminaon of all interfering elements, the method is rather lengthy. similar statement applies to the cupferron method (*2, 3, 11, 4*). The use of selenious acid as the precipitant, first tested y Smith and James (*13*) and later investigated in detail by impson and Schumb (*12*), shortens the process somewhat ithout loss of accuracy, particularly when a combination of e selenite and phosphate methods is used (*12*). Various liphatic and aromatic arsonic acids have been proposed as regents for the determination of zirconium (*1, 5, 6, 10*) and the terference of such elements as titanium and thorium is said to e obviated thereby, although several other elements still terfere.

In view of the promising results obtained with the organic rsonic acids, it seemed desirable to ascertain whether or not e more readily accessible inorganic arsenates offered posbilities as reagents for the determination of zirconium. Payull (*9*) observed in 1873 that zirconium was completely preipitated from hydrochloric acid solution by disodium arseate, and ascertained that the composition of the precipitate orresponded to that of the normal arsenate, $Zr_3(AsO_4)_4 \cdot 5H_2O$. Ioser and Lessnig (*8*) fifty years later applied this method of recipitation to the determination of zirconium in the presnce of titanium, ceric cerium, and thorium. In this method, order to convert the zirconium into the dioxide—a form itable for weighing—the arsenic was eliminated from the rsenate precipitate by volatilization as the trichloride, hydraine sulfate being employed as a reducing agent. Zirconium as precipitated from the residual solution by ammonium ydroxide, and finally weighed as ZrO_2.

PLAN OF INVESTIGATION. In the present work C. P. amonium arsenate was chosen as the precipitating agent rather han the sodium salt because of the greater ease of elimination f adsorbed reagent from the precipitated zirconium arsenate. he objectives of the investigation were: to determine the ost favorable conditions for the quantitative precipitation of irconium by ammonium arsenate; to determine what eleents are adsorbed by or co-precipitated with zirconium under hese most favorable conditions; to devise methods of eliminatg interference by such adsorbed or co-precipitated eleents; to devise a suitable method of analysis for zirconium complex materials using ammonium arsenate; and to apply he proposed method of analysis to a variety of natural or ndustrial materials containing zirconium.

Experimental Work

MATERIALS USED. The zirconyl chloride employed was the urest obtainable grade of $ZrOCl_2 \cdot 8H_2O$ and was found to be free rom significant quantities of other elements (with the exception f the customary hafnium content). A solution of this substance as made up of such concentration that each 25 cc. furnished .1200 gram of ZrO_2. The solution was standardized both by the upferron and selenious acid methods, which gave perfect agreeent.

Solutions containing 1 gram and 10 grams, respectively, of . P. ammonium arsenate per 100 ml. of solution were employed s precipitants.

[1] Present address, Merck and Co., Rahway, N. J.

METHOD OF PRECIPITATION. The zirconium contained in a 25-ml. portion of the zirconyl chloride solution, diluted to 360 ml., and 2.75 *N* in hydrochloric acid or 3.75 *N* in nitric acid, was quantitatively precipitated by dropwise addition of 50 ml. of the 1 per cent ammonium arsenate reagent at room temperature with stirring. The solution was then brought to boiling and 15 ml. of the 10 per cent reagent were added from a graduate, the boiling being continued for 20 minutes. The flocculent, highly hydrated precipitate corresponds to the normal arsenate containing adsorbed ammonium arsenate, and the above provisions were adopted after a series of experiments had shown that the extent of adsorption was reduced thereby to a minimum. After boiling for 20 minutes the solution may be filtered at once and may be ignited directly to ZrO_2, maintaining forced reducing conditions, as described below, to bring about complete volatilization of the arsenic.

METHOD OF IGNITION AND ELIMINATION OF ARSENIC. Of the various methods of removal of arsenic from the precipitated zirconium arsenate, direct ignition under oxidizing conditions was found to lead inevitably to slightly high results even when the full heat of an electric muffle furnace was applied for 6 hours, owing to the tendency shown by arsenic pentoxide to assume a vitreous, difficultly volatile form when strongly heated. Ignition in hydrogen led to more satisfactory results, but a simpler and adequate expedient proved to be the volatilization of the arsenic after reduction by means of the carbon resulting from the ashing of filter paper. A double paper was used during filtration of the precipitate to ensure the presence of sufficient carbon during ignition. Precipitate and paper were dried at 105° C. With the crucible supported in an upright position, the paper was ashed by the full flame of a Bunsen burner. To facilitate the removal of the last bits of carbon, the crucible was tilted. It was then returned to an upright position, covered with a porcelain cover, with the exception of a small slit, and the ignition was continued for 1 hour with the full heat of the Meker burner.

Strict adherence to this method was found to be essential for accuracy in the results.

Effect of Acids and Quantity of Reagent upon Precipitation

The effect of hydrochloric, nitric, and sulfuric acids in varying concentration upon the completeness of precipitation of zirconium arsenate was investigated systematically.

In the case of hydrochloric acid the maximum concentration of acid at which precipitation of zirconium was complete was found to be 2.5 *N*, with nitric acid 3.75 *N*, while with sulfuric acid, precipitation is slightly incomplete even in less than 0.5 *N* acid solution. The precipitate from hydrochloric acid solutions is bulky and easily filtered if a sufficient excess of reagent is used, but finely divided if a smaller amount is employed. From 3.75 *N* nitric acid the precipitate is flocculent and easily filtered if handled at once, but tends to assume a colloidal nature on standing.

For the complete precipitation of the zirconium contained in 25 ml. of the zirconyl chloride solution 20 ml. of the 10 per cent arsenate reagent, or its equivalent, were found to be adequate. It was determined by trial that the period of boiling of the solution containing the precipitate should not be less than 20 minutes. Standing of the precipitate following the boiling was shown to have no effect upon the results.

Other Metals Precipitated by Ammonium Arsenate

Results of a series of tests with solutions of over fifty cations and anions proved that while in nearly neutral solution many elements are precipitated by ammonium arsenate, from 2.5 *N*

TABLE I. RESULTS OF ARSENATE METHOD APPLIED TO ZIRCONIUM SOLUTIONS

Fe^{+++}	Co^{++}	Ni^{++}	Cr^{+++}	Al^{+++}	Mn^{++}	Zn^{++}	MoO_4^{--}	WO_4^{--}	Cu^{++}	Sn^{++++}	VO^{+++}	Nd^{+++}	UO_2^{++}	Ce^{++++}	Ti^{++++}	Th^{++++}	ZrO_2 Present	ZrO_2 Found	Erro
Milligrams of Element																	*Gram*	*Gram*	*Gram*
50	50	50	50	..	..	..	50	..	..	..	50	..	..	..	..	..	0.1149	0.1152	+0.00
50	50	50	50	..	50	..	..	..	..	..	..	..	..	..	..	.	0.1052	0.1048	−0.00
50	50	50	50	..	50	..	..	..	..	..	..	..	..	..	..	..	0.1052	0.1049	−0.00
50	50	50	50	50	50	50	50	..	50	50	..	..	..	..	..	..	0.1052	0.1050	−0.00
50	50	50	50	50	50	50	50	..	50	50	..	..	..	..	..	..	0.1052	0.1051	−0.00
50	50	50	50	50	50	50	50	..	50	50	50	50	50	50	..	..	0.1052	0.1054	+0.00
50	50	50	50	50	50	50	50	..	50	50	50	50	50	50	..	..	0.1052	0.1054	+0.00
20	..	..	..	20	..	..	..	..	..	..	20	..	20	..	20	..	0.1056	0.1059	+0.00
20	..	..	20	20	..	..	20	..	..	..	20	..	..	..	20	..	0.1056	0.1058	+0.00
20	20	20	20	20	..	..	..	..	20	..	20	..	20	..	20	..	0.1056	0.1055	−0.00
50	..	..	..	..	..	..	..	..	..	50	..	..	..	..	40	50	0.1056	0.1057	+0.00
50	..	50	..	..	..	..	..	..	..	..	..	..	..	..	40	50	0.1056	0.1053	−0.00
..	..	..	..	..	..	..	..	..	..	..	50	..	50	50	40	50	0.1056	0.1058	+0.00
10	..	20	20	20	20	..	..	55	20	..	..	..	..	..	..	..	0.1094	0.1090	−0.00
10	20	20	20	20	20	..	..	55	20	..	20	..	..	..	20	..	0.1094	0.1094	±0.00
10	20	20	20	20	20	..	..	55	20	..	20	.	..	..	20	..	0.1094	0.1093	−0.00

hydrochloric or 3.75 N nitric acid solutions very few are brought down; zirconium and hafnium are precipitated practically at once, while titanium, tantalum, and columbium come out only on long standing. Thus zirconium and hafnium apparently have the least soluble arsenates of all the elements. In the presence of zirconium, however, ceric cerium, thorium, and tungsten are partially brought down by co-precipitation. Thus the interfering elements are hafnium, thorium, titanium, ceric cerium, tungsten, tantalum, and columbium. Hafnium accompanies zirconium, in general, to the extent of about 1 per cent and no attempt is made to separate it from zirconium in any of the usual procedures. The effect of ceric cerium, titanium, and thorium may be eliminated by double precipitation from either hydrochloric or nitric acid solution, but the interference of tungsten persists to a serious degree. If both titanium and thorium are present, titanium then interferes, and is best provided for by a colorimetric determination on the ignited zirconium dioxide residue. The use of hydrogen peroxide to prevent precipitation is not recommended, especially in nitric acid solutions, as even small amounts of hydrogen peroxide then cause incomplete precipitation of zirconium, due to formation of a soluble perzirconate.

The most serious difficulty is caused by the presence of tungsten. A complex, soluble in hydrochloric acid, is formed by zirconium in the presence of a tungstate, and none of the ordinary precipitants of tungsten is then effective. Evaporation to dryness of the acid solution fails to separate the tungstic acid unless sulfuric acid is present, in which case repeated evaporation with concentrated hydrochloric acid, followed by one evaporation with a mixture of hydrochloric and nitric acid and baking to 105° C., succeeded in eliminating about 95 per cent of the tungsten as yellow tungstic acid, but the remaining tungsten caused interference. The best provision for tungsten was found to be a preliminary fusion with sodium carbonate.

Proposed Procedure for Determining Zirconium

Bring the sample, containing not more than 0.1 gram of zirconium, into solution as the chloride, and adjust the solution to a volume of 360 ml., 2.75 N in hydrochloric acid. Add 50 ml. of 1 per cent ammonium arsenate reagent slowly with stirring at room temperature. Bring the solution to boiling, add 15 ml. of 10 per cent ammonium arsenate reagent from a graduate, and boil for 20 minutes. After the precipitate has settled, filter at once, rinse the beaker several times with 1 N hydrochloric acid, and wash the precipitate with hot water. Pierce the tip of the paper, thoroughly flush the precipitate back into the same beaker with hot water, and evaporate on the water bath until a paste results (but do not take to dryness). Over the paper and upon this paste pour 82 ml. of hydrochloric acid (sp. gr. 1.19) and follow with 100 ml. of water, collected separately in a small beaker. Cover and boil gently for exactly 5 minutes to dissolve the precipitate, add the reserved wash water and dilute the solution to 360 ml. Let stand until cool and reprecipitate as described, except that 10 and not 15 ml. of reagent should be added after bringing the solution to boiling. Filter this time through a double pape Wash the precipitate first with 1 N hydrochloric acid, then h water. Transfer the paper and precipitate to a tared porcela crucible, dry at 110° C., ash and ignite in the special manner d scribed above, cool in a desiccator, and weigh as ZrO_2.

If titanium and thorium were present together in the origin material, titanium may contaminate the ZrO_2 residue. In th case fuse the residue in platinum with a little potassium pyrosu fate, leach with hot water, and bring to a volume of 100 or 20 ml. Add 3 ml. of 3 per cent hydrogen peroxide and match th yellow color of a sample of the solution in a test tube with th color of a standard. (The standards consisted of solutions titanium sulfate ranging in concentration from 1 to 0.1 mg. TiO_2 per 100 ml. and colored by the presence of 3 ml. of 3 per cen hydrogen peroxide. They were preserved in tightly stoppere test tubes.) The titanium content of the ZrO_2 residue may th be determined easily to within 0.1 mg. of TiO_2 and a correctic applied.

If tungsten was present in the original material, the first pr cipitation is carried out with strong, fresh ammonium hydroxic instead of ammonium arsenate. Boil gently for 10 to 15 minute wash down any precipitate above the solution, and keep hot c the water bath for an hour. Filter and wash with hot wate Discard the filtrate. Dry the precipitate and paper in a plat num crucible, fuse with 10 grams of sodium carbonate, and leac the cooled melt in hot water. Filter with the aid of paper pul wash sparingly with hot water, transfer the precipitate and pap back to the crucible, dry, and ash. Add potassium pyrosulfa until the crucible is one-third full, cover, and heat with a gradual increasing flame until a quiet, clear melt is obtained at red hea Leach the cooled melt in hot water, filter off any insoluble mat rial, dilute the filtrate to 400 ml., and precipitate again with an monium hydroxide. (If silica may be present, add 20 ml. of 18 sulfuric acid and evaporate to fumes, dilute, and filter off ar silica before making ammoniacal.) Filter and wash the precip tate; then flush it back into the same beaker with hot wate Wash down the paper with 82 ml. of hydrochloric acid (sp. g 1.19), following with 100 ml. of water. Bring the solution to volume of 360 ml. and proceed with a double precipitation by an monium arsenate as already described.

The effectiveness of the arsenate method for the determin tion of zirconium in the presence of various other ions may b clearly seen in Table I, in which the quantities of elemen present in solutions containing zirconyl ion are expressed i

TABLE II. ANALYSIS OF ZIRCONIUM ORES

(Weights in grams)

Sample No.	1[a]	2	3	4	5
ZrO_2	0.1003	0.1024	0.1055	0.1084	0.10
Slate	0.30	0.30	0.20	0.20	0.15
Phosphate rock	0.10	0.10	0.10	0.050	0.05
Cb_2O_5	0.0500	....	....	....	0.02
ThO_2	....	0.0500	0.0500	....	0.05
TiO_2	0.0500	0.0500	....	0.0500	0.05
CeO_2	....	....	....	0.0500	0.05
Fe_2O_3	0.0500	....	0.0500	....	...
Total weight of sample	0.6503	0.6024	0.5055	0.4584	0.47
ZrO_2 found	0.0993	0.1040	0.1050	0.1076	0.10
TiO_2 found	0.0001	0.0010	....	....	0.00
ZrO_2 corrected	0.0992	0.1030	0.1050	0.1076	0.10
Zr present, %	11.42	12.58	15.45	17.51	15.71
Zr found, %	11.29	12.66	15.38	17.38	15.79

[a] Fused twice with K_2CO_3.

illigrams of the element concerned. The last three columns dicate that the method compares well in accuracy (as it does rapidity) with any of the other methods in customary use. he average error is ±0.0002 gram.

Analysis for Zirconium in Ores

The proposed method of analysis was applied to the deter-ination of zirconium in mixtures of the dioxide with oxides various other metals, together with slate and phosphate ck, so as to simulate the conditions in a complex ore. (Pre-minary experiments upon steels of various compositions have dicated that the arsenate method is also applicable to the etermination of zirconium in these materials, and that the stomary preliminary extraction of iron with ether may be mitted without affecting the accuracy of the method.)

Of the various fusion processes which have been employed the preliminary treatment of natural zirconium materials, e sodium carbonate fusion followed by potassium pyro-lfate was selected in this work. Tungsten and phosphorus e eliminated thereby; if potassium carbonate is used, tan-lum and columbium as well. A second fusion may be re-uired if large percentages of these elements are found present. etails of the fusion process are given in the recommended rocedure.

Table II shows the results of typical analyses carried out n mixtures according to this method.

Summary

Zirconium forms a difficultly soluble precipitate with am-onium arsenate. The precipitate is bulky, flocculent, and asily filtered if an excess of arsenate is used; its composition orresponds to that of the normal arsenate, $Zr_3(AsO_4)_4$, highly ydrated and containing some adsorbed ammonium arsenate. he precipitate may be ignited directly to ZrO_2 by the use of orced reducing conditions in ashing and igniting; without is precaution arsenic is retained to a variable extent.

Precipitation is best made from boiling hydrochloric acid olution not exceeding 2.5 *N*, or from nitric acid not exceeding .75 *N*. Sulfuric acid even in small concentrations prevents omplete precipitation. The precipitate is soluble in hot or old concentrated hydrochloric or nitric acids, or in 6 *N* sul-uric acid. If dehydrated it becomes very slightly soluble ven in hot, concentrated sulfuric acid. A second precipita-ion is best carried out in hydrochloric acid not more concen-rated than 2.2 *N* (or 3.0 *N* nitric acid). Hydrogen peroxide the presence of nitric acid leads to incomplete precipitation f zirconium, probably because of perzirconate formation. n hydrochloric acid solution this difficulty is not met.

Of elements other than zirconium (or hafnium), in 2.5 *N* ydrochloric acid (or 3.75 *N* nitric acid) only titanium, tan-alum, and columbium precipitate, and titanium may be held solution by hydrogen peroxide. In the presence of zirco-ium (hafnium) only ceric cerium, titanium, thorium, tung-ten, tantalum, and columbium are co-precipitated by ammo-ium arsenate under the most favorable conditions in hydro-hloric acid. In nitric acid slight adsorption effects are noted ith many elements.

The interference of ceric cerium is eliminated by double pre-ipitation; that of thorium is also entirely eliminated if the recipitations are carried out in the cold, with dropwise addi-ion of 1 per cent arsenate reagent, followed by boiling to com-lete precipitation of zirconium. Titanium is best corrected or by a colorimetric estimation on the ignited ZrO_2 residue.

Most of the reagents which normally give precipitates with lkali tungstates fail to do so when a moderate amount of irconium is present, because of complex formation between he zirconium and tungstate. Although as much as 95 per cent of the tungsten may be precipitated by evaporation with sulfuric acid and baking, tungsten is best eliminated by a pre-liminary sodium carbonate fusion. If potassium carbonate instead of sodium carbonate is used, tantalum and columbium are also eliminated in this way.

For the decomposition of zirconium ores in general, sodium carbonate fusion, followed by potassium pyrosulfate fusion is recommended. A proposed method of analysis for zir-conium in solutions and ores is given, which is applicable with slight modification to steels.

Literature Cited

(1) Arnold and Chandlee, *J. Am. Chem. Soc.*, **57**, 8 (1935).
(2) Baudisch and King, J. Ind. Eng. Chem., 3, 629 (1911).
(3) Brown, *J. Am. Chem. Soc.*, **39**, 2358 (1917).
(4) Ferguson, *Eng. Mining J.*, **106**, 356, 793 (1918).
(5) Klinger and Schliessman, *Arch. Eisenhüttenw.*, **7**, 113 (1933).
(6) Knapper, Craig, and Chandlee, *J. Am. Chem. Soc.*, **55**, 3945 (1933).
(7) Lundell and Knowles, *Ibid.*, **41**, 1801 (1919); **42**, 1429 (1920).
(8) Moser and Lessnig, *Monatsh.*, **45**, 323 (1924).
(9) Paykull, *Oefvers. Sv. Akad. Förh.*, 621 (1873).
(10) Rice, Fogg, and James, *J. Am. Chem. Soc.*, **48**, 895 (1926).
(11) Schroeder, *Z. anorg. Chem.*, **72**, 88 (1911).
(12) Simpson and Schumb, *J. Am. Chem. Soc.*, **53**, 921 (1931); Ind. Eng. Chem., Anal. Ed., **5**, 40, 211 (1933); **7**, 36 (1935).
(13) Smith and James, *J. Am. Chem. Soc.*, **42**, 1764 (1920).
(14) Thornton and Hayden, *Am. J. Sci.*, **38**, 137 (1914).
(15) Wunder and Jeanneret, *J. Soc. Chem. Ind.*, **30**, 1412 (1911).

Received April 5, 1937. Contribution 60 from the Research Laboratory of Inorganic Chemistry, Massachusetts Institute of Technology.

Separation of Gold from Tellurium and Selenium

J. SEATH AND F. E. BEAMISH
University of Toronto, Toronto, Ontario, Canada

THE use of hydroquinone and related aminophenols as precipitants of gold in the presence of base metals has been discussed by Beamish, Russell, and Seath (*1*). It was decided to determine whether hydroquinone could be used for the separation of gold from tellurium and from selenium, and whether the use of hydroquinone would interfere with the subsequent precipitation of selenium and tellurium. During the progress of the investigation it became evident that the sulfur dioxide method of selenium determination was unnecessarily slow and that there were certain errors incident to the sulfur dioxide tellurium analysis which could easily be avoided. The results recorded in this report were all obtained by means of a microbalance and the essential technic is that described by Beamish, Russell, and Seath (*1*).

Solutions Used

A gold solution was made by dissolving 1.0012 grams of spectrographically pure gold in aqua regia, subsequently taking it down with hydrochloric acid in the presence of sodium chloride, and finally diluting it to 1 liter; 25.00-cc. samples of this solution on analysis by means of hydroquinone yielded 25.01 mg. of gold.

The tellurium solution was prepared by dissolving 1.0123 grams of tellurium metal in aqua regia, evaporating to dryness making three careful evaporations in the presence of hydro-chloric acid, and diluting to 1 liter.

The selenium solution was made by dissolving about 1 gram of selenium in aqua regia, evaporating in the presence of hy-drochloric acid, and diluting to 1 liter.

Table I. Gold and Tellurium Determinations

Added		Extracted	
Gold	Tellurium	Gold	Tellurium
Mg.	*Mg.*	*Mg.*	*Mg.*
25.01	25.31	24.99	25.32
25.01	25.31	25.02	25.33
25.01	25.31	24.99	25.29
25.01	25.31	25.01	25.24
25.01	25.31	24.99	25.29
25.01	25.31	24.99	25.24

Table II. Determination of Gold in Presence of Selenium

Added		Extracted	
Selenium	Gold	Selenium	Gold
Mg.	*Mg.*	*Mg.*	*Mg.*
16.96	25.01	16.05	24.98
16.96	25.01	16.47	24.99
16.96	25.01	...	24.99

Determination of Tellurium

Exactly 25.00 cc. of tellurium solution were acidified to 4 *N* hydrochloric acid strength and the tellurium was precipitated by aqueous sulfur dioxide solution and hydrazine hydrochloride according to the procedure outlined by Hillebrand and Lundell (*2*). The mixture was filtered through a porcelain-bottomed filtering crucible, A2 grade, washed with water until free of chloride and then with alcohol, and dried for 45 minutes at 105° C. The calculated weight of tellurium in a 25.00-cc. sample was 25.31 mg. The weights obtained in two analyses were 25.49 and 25.59 mg.

The above procedure was followed, except that the precipitated tellurium was dried over P_2O_5 in a vacuum at room temperature for 2 days; sample 1 weighed 25.47 mg. and sample 2 weighed 25.71 mg. Sample 1 was then dried in an air oven at 105° for 0.5 hour and weighed 25.45 mg. Sample 2 was dried at 105° for 6 hours and weighed 25.71 mg.

When this procedure was followed, except that the tellurium precipitates were dried in an oven at 105° for 0.75 hour in an atmosphere of carbon dioxide delivered by a Rose inlet tube, fitted into the air oven, and in series with a flowmeter, the results obtained were 25.30 and 25.26 mg., respectively. A third 25.00-cc. portion of tellurium, treated in exactly the same manner, was found to weigh 25.32 mg. This was dried immediately afterwards in an air oven at 140° C. for 2 hours and its weight was then found to be 25.67 mg.

When 25.00-cc. portions of tellurium solution were treated with sulfur dioxide, and dried in a carbon dioxide atmosphere as described, but alcohol was not employed as a final washing, the results were 25.37 and 25.32 mg.

It has generally been accepted that the standard sulfur dioxide–tellurium procedure yields results which are slightly high and the above experiments confirm this. It appears that drying with carbon dioxide is productive of accurate results and avoids the use of alcohol which in isolated laboratories is sometimes difficult to obtain.

Separation of Gold and Tellurium

Two 50-ml. samples were prepared, each containing 84.60 mg. of gold and 30 mg. of tellurium. The gold was precipitated from the usual 1.2 *N* hydrochloric acid solution by 30 mg. of hydroquinone. The weights of gold obtained were 84.56 and 84.54 mg.

Samples of 25.00 cc. of tellurium solution were mixed with 25.00 cc. of the gold solution and the acidity was adjusted to 1.2 *N* with hydrochloric acid. The solution was brought to incipient boiling and 5 cc. of 0.5 per cent hydroquinone solution were added very slowly at first. Boiling was continued for 5 minutes to ensure coagulation and then the gold was filtered out by means of a 3-cc., A2 grade, porous-bottomed filtering crucible and washed with about 75 cc. of water. The filtrate was adjusted to 4 *N* with hydrochloric acid and the tellurium was precipitated by means of sulfur dioxide and hydrazine hydrochloride. In each case the precipitate was dried in a carbon dioxide atmosphere. The results obtained are given in Table I.

Determination of Selenium

A 25-cc. portion of the selenium solution was adjusted to 9 *N* with hydrochloric acid and the selenium was precipitated by means of hydrochloric acid saturated with sulfur dioxide, according to the procedure outlined by Hillebrand and Lunde (*2*). The metal was dried in an air oven for 3 hours at 30° t 40° C. and then for 2 hours at 140° C. The weight of precipita was 16.90 mg. The procedure was repeated, except that tl precipitate was not washed with alcohol and ether but tran ferred, after hydrochloric acid and water washing, to the a oven and dried in the carbon dioxide atmosphere for 45 minute The results were 16.93 and 16.95 mg. By this method the r sults obtained were as accurate as those from the standard pr cedure and the time of analysis was greatly shortened.

Determination of Gold in Presence of Seleniu

A 25.00-cc. portion of the gold solution was mixed with 25.(cc. of the selenium solution and the gold precipitated as in tl case of gold and tellurium. The filtrate was adjusted to a acidity of 9 *N* with hydrochloric acid and then treated as d scribed above for selenium. The results obtained are recorde in Table II.

Two 25-cc. portions of selenium solution were adjusted 1.2 *N* acidity by hydrochloric acid and treated with hydroquino exactly as described for gold. The slight red precipitate w dried in carbon dioxide as outlined for selenium.

The results obtained were 0.66 and 0.48 mg. for samples 1 ar 2, respectively. The selenium in the filtrates of these sampl was precipitated with sulfur dioxide from 9 *N* solutions and tl weights were: sample 1, 16.27 mg.; sample 2, 16.42 mg.; tot weight of selenium, 16.93 and 16.90 mg., respectively.

While the use of hydroquinone does not interfere in tl reduction to selenium by means of sulfur dioxide, it cann be used when selenium and gold are to be determined from single sample. The small amount of selenium carried wit the gold apparently burns off when the gold is annealed.

Determination of Gold, Tellurium, and Silver

The following is a résumé of the procedure used by tl authors to determine silver, tellurium, and gold prese together in the precipitate obtained by treatment of mi cyanide solutions with zinc. The filtrates from the silve gold, and tellurium precipitations can be used for the con plete determination of the associated base elements.

The dried gray precipitate is treated with nitric acid and evaporated to complete dryness several times with hydrochlor acid to aid in coagulation of the silica which has a tendency t pass through the filter paper. The dried residue is again treate with aqua regia to redissolve gold which has baked out, the evaporated carefully, and finally moistened three times wit hydrochloric acid in the presence of sodium chloride to remo the nitric acid. The solution is then diluted with about 40 c of water, boiled for 5 minutes, and cooled. The silver and silic are filtered off by means of a Whatman 7-cm. No. 42 filter pap and washed with water. The gold and tellurium are precipitate from the filtrate as described above. The silver chloride–silic residue and filter paper are treated with sulfuric acid and fumin nitric to dissolve the silver chloride, and the silica is filtered of Then the silver sulfate solution is treated with hydrochloric aci and silver determined as the chloride. Results obtained o approximately 150-mg. samples of one such precipitate wi serve to illustrate the percentage difference usually obtained o duplicate determinations: gold, 36.12, 36.17; silver, 5.20, 5.2 tellurium 5.33, 5.32. This sample treated by fire assay yielde 36.17 per cent of gold.

Summary

Hydroquinone precipitates gold quantitatively in the pre ence of tellurium and selenium.

Tellurium can be determined directly from the filtrate b means of sulfur dioxide and hydrazine hydrochloride aft adjusting to the usual acid concentration. Tellurium an selenium precipitated by means of sulfur dioxide can b efficiently dried in an atmosphere of carbon dioxide.

Literature Cited

(1) Beamish, F. E., Russell, J. J., and Seath, J., Ind. Eng. Chem Anal. Ed., 9, 174 (1937).

(2) Hillebrand and Lundell, "Applied Inorganic Analysis," pp. 258 67, New York, John Wiley & Sons, 1929.

Received May 12, 1937.

The Peroxide Method for Vanadium

A Spectrophotometric Study

E. R. WRIGHT[1] WITH M. G. MELLON, Purdue University, Lafayette, Ind.

A WELL-KNOWN colorimetric method for vanadium (*4*) is based upon the formation of a reddish brown color by reaction between quinquivalent vanadium and hydrogen roxide in acid solution. The color is supposedly due to roxyvanadic acid, HVO_4 (*1*). The method was first pro-sed by Slawik (*3*) and was extended by McCabe (*2*) among hers (*4*).

The authors (*5*) outlined the advantages of the spectrophometer for studying the general nature of colorimetric reac-ns and the significant factors affecting the color. The ject of the present paper was to make such a study of the roxide method for vanadium.

TABLE I. EFFECT OF ACID

No.	Acidity	Transmittancy Differences Unknown-Standard Max.	Av.
	Ml./100 ml.		
1[a]	None	+68	33
2	10, 6 *N* H_2SO_4	+ 2.5	1.2
3	25, 6 *N* H_2SO_4	0	0
4	50, 6 *N* H_2SO_4	− 0.5	0.1
5	85, 6 *N* H_2SO_4	+ 1.0	0.5
6	25, 36 *N* H_2SO_4	+ 5.0	2.2
7	10, 6 *N* H_2SO_4	+ 3.5	2.0
8	25, 6 *N* H_2SO_4	+ 1.0	0.3
9	50, 6 *N* H_2SO_4	0	0
10	25, 6 *N* HNO_3	+ 3.0	1.0
11	25, 6 *N* HCl	+ 3.0	1.0

[a] All solutions contain 2.0 mg. of vanadium per 100 ml.; solutions 1 to 5 ntain 1 ml. and 6 to 11 contain 5 ml. of 3 per cent hydrogen peroxide; ansmittancy differences cover the range 400 to 700 mμ.

TABLE II. EFFECT OF PEROXIDE CONCENTRATION

No.	3 Per Cent Hydrogen Peroxide	Transmittancy Differences Unknown-Standard Max.	Av.
	Ml.		
1[a]	0.1	+3.0	1.5
2	0.2	0	0
3	0.5	0	0
4	3.0	0	0
5	10.0	+3.5	2.5

[a] All solutions contain 2.0 mg. of vanadium and 25 ml. of 6 *N* H_2SO_4 per 0 ml. total in 4.983-cm. cells; transmittancy differences cover the range 0 to 700 mμ.

Mallinckrodt U. S. P. 3 per cent hydrogen peroxide solution as used. A description of other reagents, apparatus, and perimental methods may be found in an earlier paper (*5*).

Typical spectrophotometric curves covering the most use-l range of concentrations are shown in Figure 1 for a cell ngth of 5.00 cm.

Effect of Acid Concentration

As shown in Table I, the maximum color intensity is not veloped until the solution has an acid concentration of out 0.6 *N*. As the acid concentration is increased further to 6 *N*, little change takes place, while at 9 *N* the color egins to fade. If a higher concentration of peroxide is em-oyed, the solution must be at least 1.5 *N* in acid concentra-on for development of maximum color. The type of acid sed appears to affect the hue somewhat, although not enough be detected visually.

Concentration of Peroxide

Table II shows the variation in color with change in per-ide concentration. These data show that comparatively little peroxide is necessary for development of maximum color, while an excess causes a diminution in the color intensity. The optimum concentration appears to lie between 0.2 and 3 ml. of 3 per cent hydrogen peroxide solution, over which range practically no variation in color is observed.

Effect of Diverse Ions

In addition to the ions listed in Table III, the following substances were found to have no effect at stated concentrations (total volume 100 ml.): 10 grams of $NaNO_3$; 500 mg. of Bi^{+++}, Zn^{++}, Cd^{++}, As (as H_3AsO_4), Th^{++++}, Hg^{++}, Ca^{++}, Mg^{++}, Sr^{++}, Ba^{++}, Pb^{++}, Al^{+++}, $C_2H_3O_2^-$, $C_4H_4O_6^-$, ClO_3^-, P_2O_5 [as $(NH_4)_2HPO_4$]; 250 mg. of Li^+, Be^{++}, B_2O_3 (as $Na_2B_4O_7$); 100 mg. of Sb^{+++}, Zr^{++++}; 50 mg. of SiO_2 (as Na_2SiO_3); and 100 mg. of Ag^+.

The main type of interference is furnished by the elements molybdenum, titanium, and tungsten, which form colored solutions with the reagents. Titanium is the worst source of interference, 0.05 mg. being sufficient to cause a maximum deviation of about 2 per cent from the standard curve. Molybdenum and tungsten both interfere by the formation of a yellow color with the reagents, but are not so sensitive in this respect as titanium. In the case of molybdenum a yellow peroxy acid is formed, while in the case of tungsten a yellow heteropoly complex compound between the vanadium and tungsten is the probable source of interference.

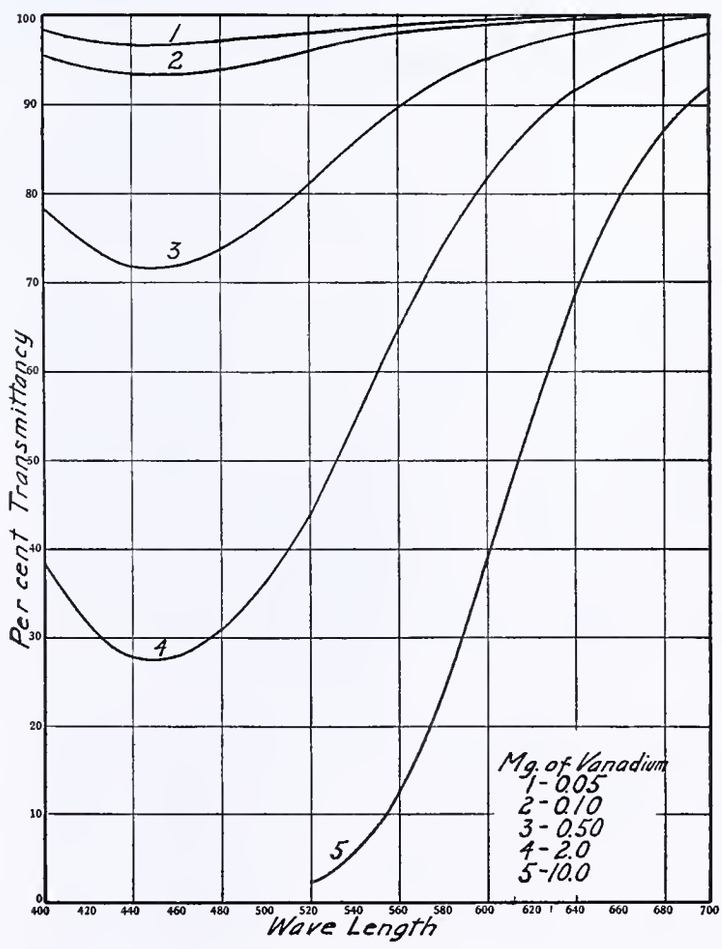

FIGURE 1. TYPICAL CURVES

[1] Present address, Dow Chemical Company, Midland, Mich.

TABLE III. EFFECT OF DIVERSE IONS

No.	Substance	Limiting Concn. per 100 ml.	Transmittancy Differences Unknown-Standard Max.	Av.
1[a]	$Co(NO_3)_2$	10 mg. Co	− 2.0	1.5
2	$Cu(NO_3)_2$	10 mg. Cu	−10.0	1.5
3	$Fe(NO_3)_3$	10 grams Fe	−14.0	1.0
4	KCl	10 grams KCl	− 1.0	0.5
5	KCNS	10 mg. CNS	+ 1.5	2.0
6	$K_2Cr_2O_7$	1.0 mg. Cr	− 4.0	2.5
7	$K_2C_2O_4$	10 mg. C_2O_4	− 4.0	2.5
8	KI	2.0 mg. I	−10.0	5.0
9	NaBr	500 mg. Br	−12.0	1.0
10	Na_2SO_4	10 grams Na_2SO_4	− 4.5	1.0
11	Na_2WO_4	100 mg. W	−16.0	1.5
12	NH_4Cl	10 grams NH_4Cl	− 2.0	0.5
13	$(NH_4)_2MoO_4$	5 mg. Mo	−15.0	2.0
14	$(NH_4)_2SO_4$	10 grams $(NH_4)_2SO_4$	+ 3.0	2.5
15	$Ni(NO_3)_2$	20 mg. Ni	− 6.0	2.0
16	$SnCl_4$	400 mg. Sn	− 2.0	1.5
17	$TiOSO_4$	0.05 mg. Ti	− 2.0	1.0
18	$UO_2(C_2H_3O_2)_2$	50 mg. U	− 5.5	1.0

[a] All solutions contain 2.0 mg. of vanadium, 25 ml. of 6 N H_2SO_4, and 1.0 ml. of 3 per cent hydrogen peroxide per 100 ml. total; cell length 4.983 cm.; transmittancy differences cover the range 400 to 700 mμ.

TABLE IV. STABILITY

No.	Age	Transmittancy Differences Unknown-Standard Max.	Av.
1[a]	15 min.	0	0
2	7 days	+ 0.5	0.1
3	15 min.	0	0
4	47 hours	0	0
5	4 days	+13.5	9.0

[a] All solutions contain 2.0 mg. of vanadium and 25 ml. of 6 N H_2SO_4 per 100 ml.; solutions 1 and 2 contain 5 ml. and 3 to 5 contain 1 ml. of 3 per cent hydrogen peroxide; transmittancy differences cover the range 400 to 700 mμ.

Stability

Table IV shows the stability of the peroxyvanadate solutions. The solutions have the compositions stated in Table IV and were kept in glass-stoppered bottles when not in us The conclusions which may be drawn from these data a that the solutions are stable for 2 days with small amoun of hydrogen peroxide and a week or more if a slight exce (5 ml. total) of hydrogen peroxide solution is added. Tl more acid solutions fade most rapidly.

Summary

Typical transmittancy curves are given in Figure 1.

The solutions should have an acid concentration betwee 0.6 and 6 N in sulfuric, nitric, or hydrochloric acids.

The solutions should contain 0.5 to 3 ml. of 3 per cer hydrogen peroxide solution per 100 ml. An excess of hydr gen peroxide decreases the color, but consistent use of mo hydrogen peroxide (up to 10 ml.) is permissible.

Titanium is the worst interfering element. Table III giv maximum allowable concentrations of diverse ions.

Under recommended conditions, the solutions are stab for at least 2 days. An excess of hydrogen peroxide promot stability.

Literature Cited

(1) Latimer, W. M., and Hildebrand, J. H., "Reference Book Inorganic Chemistry," p. 270, New York, Macmillan Co., 193
(2) McCabe, C. R., *Chem. Eng.*, 13, 243–7 (1911); J. IND. EN CHEM., 5, 736–7 (1913).
(3) Slawik, P., *Chem.-Ztg.*, 34, 648 (1910).
(4) Snell, F. D., and Snell, C. T., "Colorimetric Methods of Analysis p. 367, New York, D. Van Nostrand Co., 1936.
(5) Wright, E. R., with Mellon, M. G., IND. ENG. CHEM., Anal. Ec 9, 251 (1937).

RECEIVED April 12, 1937. Abstracted from part of a dissertation submitt by E. R. Wright to the graduate school of Purdue University in parti fulfillment of the requirements for the degree of doctor of philosophy.

Production of Uniform Test Films of Shellac anc Other Finishes

PAUL F. BRUINS, Polytechnic Institute of Brooklyn, Brooklyn, N. Y.

THE production of uniform films of a definite thickness for testing the mechanical and electrical qualities of paint and varnish materials has received neither the proper amount of consideration nor study. This is especially true for shellac films. Standard methods are unsatisfactory in that they rely upon the uncertain technic of preparing specimens by manual means (*1–4*), so that in many instances data from different laboratories cannot be correlated. Individual investigators (*5–7*) have used procedures which are largely applicable to the particular study in which they were interested.

This paper describes an apparatus for producing unusually uniform films of a predetermined thickness which can be used for various test purposes. The device can be easily constructed by the investigator himself.

Description of the Apparatus

The instrument is illustrated in Figure 1. It is constructed of a tire pump having a platform bolted to its handle and a needle valve attached to the exhaust tube to regulate the rate of air discharged. The platform can thus be lowered at any desired uniform rate. A second pump serves as a compressor supplying air to the first pump as a handy means of raising the platform. A bicycle inner-tube valve is inserted between the two pumps to allow the air to be discharged only through the needle valve. The apparatus is bolted to a ring stand and a clamp holds the needle valve in such a position that its setting can be accurately adjusted by means of an attached pointer placed in front of a suitable scal as shown.

Procedure for Forming Films

The device operates upon the principle that films of a un form thickness are formed when they are withdrawn from th coating material at a uniform rate which is lower than tha of the rate of drainage of the varnish or paint. Suitable film for test purposes are obtained when the following directior are followed:

Surfaces to be coated must be clean and uniform in characte The object is suspended by means of the clamp shown in Figure above the container which is filled with the coating materia The varnish or paint should be well mixed, free from foreign pa ticles and air bubbles, and at a standard temperature. The objec is immersed by raising the platform, keeping the needle valve in closed position, and is allowed to stand until the surface is thor oughly wet with the varnish and all air bubbles are freed from it Withdrawal is effected by setting the needle valve at the prope position, depending upon the characteristics of the coating ma terial which have been determined beforehand. After dipping the piece can be removed and allowed to dry under controlled con ditions in a vertical position.

The thickness of the films obtained with this device is i direct proportion to the rate at which an object is withdraw from the varnish, until a point is reached where the rate o

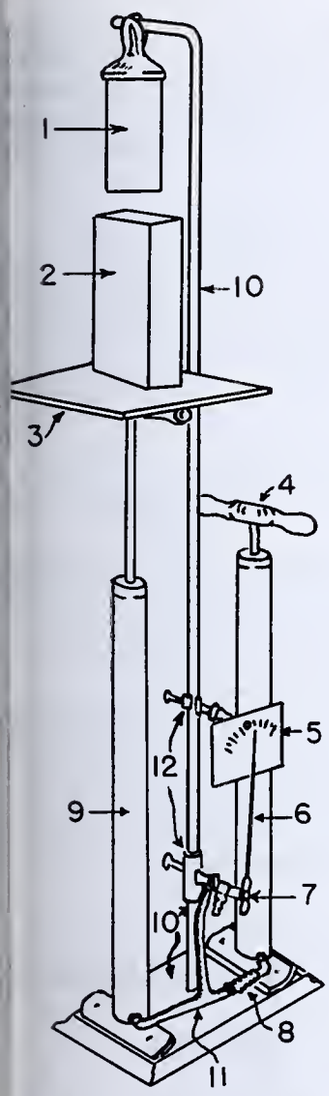

IGURE 1. DIPPING DEVICE

1. Test plate
2. Varnish container
3. Platform
4. Air pump
5. Scale
6. Pointer
7. Needle valve
8. Check valve
9. Elevating pump
10. Ring stand
11. Rubber hose
12. Clamp

dipping approaches that of the drainage of the varnish from the coated object. Above this value, the thickness of the films is less than what would be expected from a straight-line relationship. The amount of increase in film thickness which occurs with increase in rate of withdrawal and the maximum uniform thickness which can be obtained vary according to the coating material and to the character of the surface coated. This is illustrated in Figure 2.

Although the film-forming characteristics of one sample of a varnish cannot be taken as a precise indication of the results which will be obtained with another sample of the same body or cut, there is a definite relation between the viscosity of a product and the film thickness which can be obtained. It is possible to obtain films of a predetermined thickness by selecting the proper withdrawal rate, by preparing calibration curves such as those shown in Figure 3, for 3- and 5-pound shellac varnishes. The proper setting of the needle valve for varnishes of a viscosity intermediate between those used for the calibration can be readily estimated from the curves by interpola-

on. All measurements of thickness should be made after ıe film is completely dry.

Controlled Dipping Method

PRECISION. Measurements of film thickness in this in-estigation were made with a Brown and Sharpe microme-r having a deep throat, so that measurements could be ıade up to 3 inches from the edge of the film. Agree-ıents on measurements by three observers were obtained ith this instrument to within 0.0001 inch. Film thick-ess was determined by measuring the combined thick-ess of the dry film and its support and obtaining the film ıickness by the difference between that measurement ıd the thickness of the supporting medium.

Measurements of film thickness along a diagonal line xtending across the film showed a deviation from the verage thickness for any film of ±0.0001 inch. Typical ıeasurements are shown in Table I. This uniformity of ıickness was obtained over the entire film with the excep-on of the extreme bottom edge, which, being the last to nerge from the coating material, carried a bead of greater ıickness. This bead can be trimmed off or disregarded ı any subsequent tests.

TABLE I. FILM THICKNESS OF A CLEAR LACQUER ON BRASS

Withdrawal Rate	Position of Measurement	Thickness: Plate and 2 films	Plate and 1 film	Plate bare	1st film	2nd film
Inches/min.		*Inch*	*Inch*	*Inch*	*Inch*	*Inch*
1	1 (top)	0.0262	0.0259	0.0256	0.0003	0.0003
	2	0.0262	0.0259	0.0256	0.0003	0.0003
	3	0.0260	0.0257	0.0254	0.0003	0.0003
	4	0.0258	0.0256	0.0253	0.0002	0.0003
	5	0.0253	0.0251	0.0249	0.0002	0.0002
	6	0.0249	0.0246	0.0243	0.0003	0.0002
	7 (bead)	0.0253	0.0250	0.0247	0.0003	0.0003
2	1 (top)	0.0253	9.0250	0.0247	0.0003	0.0003
	2	0.0257	0.0252	0.0247	0.0005	0.0005
	3	0.0259	0.0255	0.0251	0.0004	0.0004
	4	0.0261	0.0257	0.0254	0.0004	0.0003
	5	0.0262	0.0258	0.0253	0.0004	0.0005
	6	0.0261	0.0257	0.0253	0.0004	0.0004
	7 (bead)	0.0264	0.0259	0.0255	0.0005	0.0005
4	1 (top)	0.0264	0.0260	0.0256	0.0004	0.0004
	2	0.0265	0.0261	0.0256	0.0004	0.0005
	3	0.0265	0.0260	0.0255	0.0005	0.0005
	4	0.0263	0.0258	0.0254	0.0005	0.0004
	5	0.0260	0.0255	0.0250	0.0005	0.0005
	6	0.0255	0.0249	0.0244	0.0006	0.0005
	7 (bead)	0.0258	0.0251	0.0244	0.0007	0.0007
8	1 (top)	0.0266	0.0260	0.0253	0.0006	0.0007
	2	0.0269	0.0262	0.0256	0.0007	0.0007
	3	0.0266	0.0260	0.0254	0.0006	0.0006
	4	0.0265	0.0259	0.0254	0.0006	0.0005
	5	0.0263	0.0256	0.0250	0.0007	0.0006
	6	0.0250	0.0263	0.0246	0.0007	0.0007
	7 (bead)	0.0276	0.0260	0.0245	0.0016	0.0015

APPLICABILITY. Although the method was developed primarily for the purpose of overcoming the difficulties involved in producing uniform shellac films of about one mil in thickness, it appears to have a wider range of utility, and to be equally applicable to many other coating materials as a simple and more rapid means of preparing test films.

This controlled dipping method as described is limited in application to the coating of rigid nonporous surfaces, but might be adapted to other materials. It cannot be satisfactorily applied to extremely viscous dopes or plastic paints, except possibly as a means for measuring the "after flow" of these compositions by noting the angle of the wedge-shaped film obtained.

The maximum film thickness which can be obtained in one

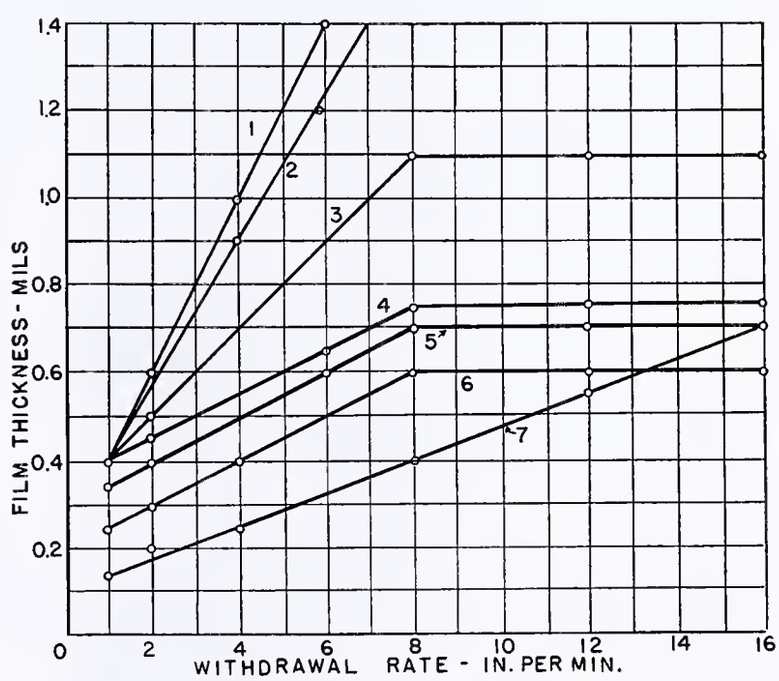

FIGURE 2. EFFECT OF SURFACE COATED

1. Bleached shellac, 5-pound cut on glass
2. Orange shellac, 4-pound cut on glass
3. White lacquer, brass or glass
4. Oil varnish on brass
5. Clear lacquer on brass
6. Oil varnish on glass
7. Clear lacquer on glass

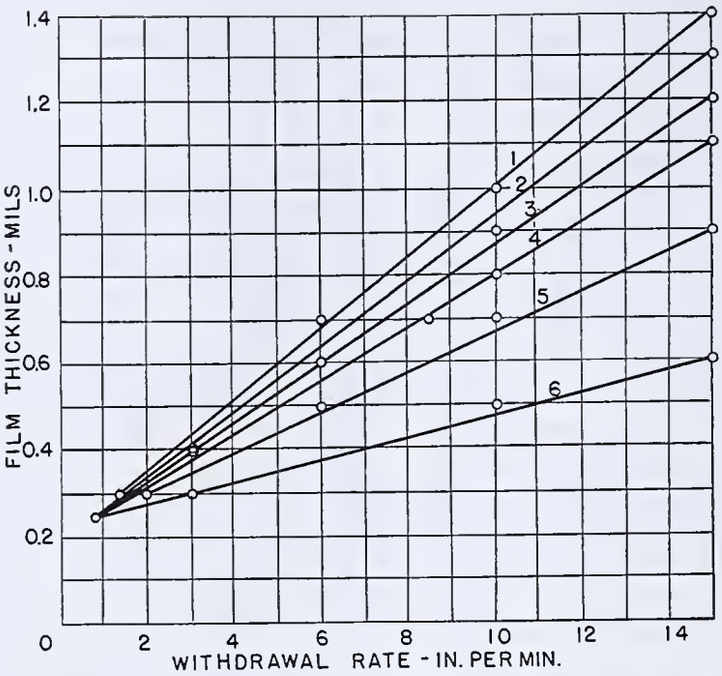

FIGURE 3. CALIBRATION CURVES FOR DEWAXED BLEACHED SHELLAC ON GLASS SURFACE

1. 5 pounds per gallon, 720 seconds Saybolt, 25° C.
2. 5 pounds per gallon, 500 seconds Saybolt
3. 5 pounds per gallon, 250 seconds Saybolt
4. 3 pounds per gallon, 500 seconds Saybolt
5. 3 pounds per gallon, 250 seconds Saybolt
6. 3 pounds per gallon, 60 seconds Saybolt

application is limited, as pointed out above. The limits c pend upon the nature of the material. However, grea film thicknesses have been successfully prepared with shellac applying successive coats. Solvent effect on previous co was avoided by keeping the immersion time at a minimum.

Acknowledgment

The author wishes to thank Wm. Howlett Gardner for l helpful criticism and coöperation in this work, and to expre his appreciation to R. E. Kirk, J. C. Olsen, and those asso ated with the London Shellac Research Bureau—A. J. Gibs L. A. Jordan, A. Monkhouse, W. B. Parker, and L. Verman—for their kind examination of the manuscript a helpful suggestions.

Literature Cited

(1) Am. Soc. Testing Materials, *Proc.*, *Pt. I*, **35**, 1087 (1935). Des nation D115-35T.
(2) *Ibid.*, *Pt. I*, 35, 876 (1935). Designation D406-35T.
(3) Am. Soc. Testing Materials, *Standards*, *Pt. II*, 781–3 (193 Designation D154-28.
(4) *Ibid.*, *Pt. II*, 760 (1936). Designation D29-33.
(5) Gardner, W. H., and Kappenberg, W., IND. ENG. CHEM., 437–9 (1936).
(6) Paisley, J. W., *Ibid.*, **24**, 163 (1932).
(7) Rangaswami, M., and Aldis, R., *Indian Lac Research In Research Note*, No. 4 (1933).

RECEIVED April 17, 1937. Presented before the Division of Paint and V nish Chemistry at the 93rd Meeting of the American Chemical Socie Chapel Hill, N. C., April 12 to 15, 1937.

Determination of Chromium in Ferrochrome

Phosphoric Acid as Solvent with Mixed Perchloric and Sulfuric Acids as Oxidant

G. FREDERICK SMITH AND C. A. GETZ, Chemical Laboratories, University of Illinois, Urbana, Ill.

The use of 85 per cent phosphoric acid in the rapid solution of high- and low-carbon ferrochrome may be followed by oxidation of chromium, using a mixture of perchloric and sulfuric acids at 210° C.

The new procedure is an improvement over the method involving fusing with sodium peroxide.

In two modifications of this method, permanganate or persulfate is used to remove the hydrogen peroxide formed in oxidations by perchloric acid at a high temperature. The former is more rapid and equally accurate.

THE determination of chromium in ferrochrome is generally carried out after fusion with sodium peroxide and solution of the sample. The sample is decomposed with oxidation of the chromium to the hexavalent form, formation of ferric oxide and sodium silicate, and oxidation of carbon. The fusion is leached with water, filtered, and washed, the filtrate is acidified, and the hexavalent chromium is determined by titration with standard ferrous sulfate. The required fusion with sodium peroxide, the troublesome filtration and washing, and subsequent acidification before titration of the oxidized chromium make this procedure far fr satisfactory. It gives excellent results, but is not rapid.

Both the high- and low-carbon types of ferrochrome a easily and completely soluble in sirupy phosphoric acid 8 to 10 minutes at temperatures between 180° and 250° A portion of the silicon is left as flocculent silicic acid and small amount of carbon may remain. The iron and chrom phosphates are readily soluble in hot concentrated ph phoric acid. If the oxidation of chromium in the presence phosphoric acid can be conveniently provided for, this meth of solution can be used to improve greatly the speed a convenience of determining chromium in ferrochrome. T present paper describes new procedures which are probab the most rapid known and leave little to be desired economy, accuracy, and convenience.

Previous Work

The theoretical considerations involved in the use of a mi ture of perchloric and sulfuric acids as a powerful oxidizi mixture have been discussed by Smith (*1*). The formati of appreciable amounts of hydrogen peroxide from the int action of these two acids at a temperature in the region 200° C. (*1*) necessitates corrective procedures to countera the reducing action of the hydrogen peroxide. The co plicating influence of hydrogen peroxide formation is mo pronounced when a mixture of phosphoric, perchloric, a sulfuric acids is used in an analytical application, since t greatest oxidizing action takes place at 205° to 210° C. T former condition is illustrated in the analysis of chromiu

chromic oxide as described by Smith, McVickers, and llivan (*4*). The latter condition is described by Smith d Smith (*5*) in the determination of chromium in stainless eel. The corrective measures used by Smith and Smith) must be applied to the present work in the determination chromium in ferrochrome. In addition, an alternative produre is suggested which, although more time-consuming, s its points of advantage. The use of phosphoric acid ixture with perchloric acid as solvent for tungsten, ferngsten, and tungsten tool steels was described by Smith, cHard, and Olsen (*3*). Willard and Thompson (*6*) were parently the first to suggest the use of sirupy phosphoric id for the solution of refractory materials, applying it to uxite and iron ore.

Phosphoric Acid as Solvent for Metallurgical Materials

Hot sirupy phosphoric acid is an excellent solvent for ferrorome. Hydrogen is liberated and most of the silicon is ld in solution. Practically all the carbon in both high- and w-carbon ferrochrome is evolved as hydrocarbons. The tion is vigorous at a temperature of 160° to 170° C. starting ith an 85 per cent acid, and is complete at 220° to 250° C., ter 8 to 10 minutes gradual increase in temperature. Ferronadium is likewise easily soluble under the same conditions; e solvent effect is much more convenient than solution in e mixture of hydrofluoric and nitric acids ordinarily emoyed. In the case of a high-speed tungsten tool steel, all e sample is soluble in hot sirupy phosphoric acid except the ngsten, which may then be dissolved by the addition of rchloric and sulfuric acids. Many types of chromite ore e practically insoluble in hot concentrated perchloric acid its mixture with sulfuric acid. Such samples are easily luble in hot sirupy phosphoric acid, in which case solution ust follow a sodium peroxide fusion if the use of phosphoric id is excluded. All these applications of phosphoric acid e at present being investigated as a starting point in the velopment of improved methods of analysis in the deterination of chromium, vanadium, tungsten, iron, and sulfur metallurgical materials.

Alternative Procedures for Determining Chromium in Ferrochrome

Permanganate Procedure. A 100-mg. sample of high- or w-carbon ferrochrome is weighed accurately from a small eighing bottle into a 500-ml. Erlenmeyer flask, and a 5-ml. rtion of 85 per cent phosphoric acid is added. A 200° to 250° C. nschütz thermometer, 130 to 140 mm. in length and: usended from the neck of the flask by a small platinum wire, is ljusted inside the flask. A refluxing still head is placed in the ck of the flask. The heating is then begun, using a modified odgers ring burner, and applying sufficient heat to bring the sk contents to a temperature of 250° C. The first application heat volatilizes water from the sirupy phosphoric acid and a gorous evolution of hydrogen and hydrocarbons begins at 160° C. y the time the flask and contents have attained the full at (8 to 10 minutes), all the sample will be dissolved and the ear green solution will contain only small amounts of silica d precipitated carbon. Any fine particles not completely ssolved will be made evident by a rapid local evolution of bubes of gas. When all gas evolution has stopped, a 15-ml. portion mixed perchloric and sulfuric acid (equal volumes of 72 per nt perchloric acid and 80 per cent by volume sulfuric acid) is lded. The temperature of the reacting mixture falls to approxiately 160° C. With adjustment of the burner to heat the flask ntents to 210° C., the sample begins to oxidize rapidly at 0° C. The flask and contents are heated 5 minutes at 210° C. d then allowed to cool to 205° C.

The refluxing still head is then raised and 35 to 40 mg. of finely vided potassium permanganate are added. The flask is swirled d immediately plunged into cold water, continuing the swirling otion. In 10 seconds the contents can be diluted (cautiously first) with 100 ml. of water. The thermometer is then removed d rinsed and a small boiling chip of Filter-Cel and 10 ml. of 1 to 4 hydrochloric acid are added. The solution is boiled 5 minutes and cooled under running tap water, 20 ml. of 1 to 1 sulfuric acid are added and the solution is titrated with 0.05 *N* ferrous sulfate from a 100-ml. buret. When the solution is 90 per cent titrated, as indicated by the color change from bright yellow to a yellowish green, 3 drops of 0.025 *M* *o*-phenanthroline ferrous ion (ferroin) are added. The remaining hexavalent chromium oxidizes the indicator to its almost colorless form.

The titration is then completed with dilution to 400 ml., if desired, to sharpen the end point, which is marked by the production of a decided pink cast with one drop excess of ferrous sulfate solution. No indicator correction is required, since the indicator was added in the ferrous form and remains at the end of the titration in the same form. In calculating results, the standard factor is obtained by titration of the ferrous sulfate solution with standard ceric sulfate, which has in turn been standardized using U. S. Bureau of Standards sodium oxalate. One milliliter of 0.05 *N* ferrous sulfate is equivalent to 8.6666 mg. of chromium. The ferrous sulfate solution may be standardized, using a sample of ferrochrome of known chromium content, by the procedure described above.

The permanganate procedure demands a rapid cooling and dilution of the sample after the addition of the potassium permanganate, and if this portion of the operation requires more than 10 seconds, low results may be expected (*5*). To avoid breakage of the retaining flask, this procedure must be mastered by repeated trials.

Persulfate Procedure. The slight reversal of the oxidation of chromium by the small amount of hydrogen peroxide formed by decomposition of perchloric acid at 205° C. can be corrected for and danger of breakage avoided by using ammonium persulfate after a more leisurely dilution of the hot mixed acid solution of the sample.

The persulfate procedure is exactly the same as the permanganate procedure up to the point at which the hot oxidized solution is cooled and diluted. In the persulfate method the cooling and dilution can be made less rapidly. The solution is diluted, after cooling 15 to 20 seconds with the flask immersed in cold water, by the addition of 100 ml. of water, and heated to boiling for 1 minute to drive off most of the chlorine. One milliliter of 0.1 *N* silver nitrate and 2.5 grams of ammonium persulfate are added. The solution is diluted to 300 ml. with hot water and, after adding a Filter-Cel boiling chip, boiled for 10 minutes to decompose excess persulfate. Ten milliliters of 1 to 4 hydrochloric acid are added, the solution is boiled 5 minutes, cooled under running tap water, and 20 ml. of 1 to 1 sulfuric acid are added. It is then titrated, using 0.05 *N* ferrous sulfate from a 100-ml. buret until approximately 90 per cent of the hexavalent chromium is reduced. Three drops of 0.025 *M* ferroin indicator are added and the solution is titrated to a decided pink cast. The persulfate procedure requires 10 to 15 minutes longer for completion than the permanganate process, but the results obtained are practically identical.

Figure 1

Apparatus and Equipment Used

The procedures described above are rapid, but require uniform heat control, which may be provided in a number of ways. Those recommended as most convenient are as follows:

Using a modified Rodgers ring burner (*2*), with two variable heat adjustments, a predictable temperature control can be obtained with 1° or at most 2° of the desired value. An electrically heated hot plate can be substituted with less efficient results. A small square of Nichrome wire gauze is recommended for use with the Rodgers ring burner; asbestos-protected iron wire gauze is just a source of irritation as a substitute.

Thermometers with external calibration markings are not satisfactory, as their etched markings are generally darkened by use of chromic oxide which is soon dissolved off the instrument, introducing error and leaving the

TABLE I. ANALYSIS OF HIGH- AND LOW-CARBON FERROCHROME

(Comparison of results by two different methods with U. S. Bureau of Standards sample 64)

	Analysis No.	Weight	Method Used	$FeSO_4$	$FeSO_4$	Chromium	Deviation from Mean	Deviation from Known Value
		Gram		*N*	*Ml.*	%	%	%
Sample 204-2	1	0.1579	$KMnO_4$	0.05112	127.00	71.29	+0.18	....
	2	0.1228	$KMnO_4$	0.05112	98.30	70.95	−0.16	....
	3	0.1013	$KMnO_4$	0.05112	81.30	71.13	+0.02	....
	4	0.1298	$KMnO_4$	0.05112	103.80	70.88	−0.23	....
	5	0.1379	$KMnO_4$	0.05112	110.60	71.08	−0.03	....
	6	0.1303	$KMnO_4$	0.05112	104.30	70.95	−0.16	....
	7	0.1112	$KMnO_4$	0.05112	89.50	71.33	+0.22	....
	8	0.0864	$KMnO_4$	0.05093	69.54	71.06	−0.05	....
	9	0.1127	$KMnO_4$	0.05093	77.30	71.36	+0.25	....
						Av. 71.11	Av. 0.14	
Sample 64	10	0.1049	$KMnO_4$	0.05112	80.50	68.01	+0.04	+0.11
	11	0.0870	$KMnO_4$	0.05112	66.70	67.94	−0.03	+0.04
	12	0.1183	$KMnO_4$	0.05112	90.70	67.94	−0.03	+0.04
	13	0.0805	$KMnO_4$	0.05112	61.70	67.92	−0.05	+0.02
	14	0.1242	$KMnO_4$	0.05093	95.75	68.05	+0.08	+0.15
						Av. 67.97	Av. 0.05	Av. +0.07
Sample 203-2	15	0.24315	$KMnO_4$	0.05055	191.65	69.08	−0.05	....
	16	0.22030	$KMnO_4$	0.05055	173.80	69.15	+0.02	....
	17	0.08790	$KMnO_4$	0.05055	69.34	69.14	+0.01	....
	18	0.10800	$KMnO_4$	0.05055	85.17	69.12	−0.01	....
	19	0.12855	$(NH_4)_2S_2O_8$	0.05055	101.40	69.14	+0.01	....
	20	0.11700	$(NH_4)_2S_2O_8$	0.05055	92.26	69.11	−0.02	....
	21	0.11330	$(NH_4)_2S_2O_8$	0.05055	89.46	69.20	+0.07	....
						Av. 69.13	Av. 0.03	
Sample 204-2	22	0.1456	$(NH_4)_2S_2O_8$	0.05055	118.20	71.15	−0.09	....
	23	0.1069	$(NH_4)_2S_2O_8$	0.05055	87.20	71.50	+0.26	....
	24	0.1035	$(NH_4)_2S_2O_8$	0.05055	84.02	71.15	−0.09	....
	25	0.0787	$(NH_4)_2S_2O_8$	0.05055	63.60	70.83	−0.41	....
	26	0.0970	$(NH_4)_2S_2O_8$	0.05055	68.90	71.29	+0.05	....
	27	0.1116	$(NH_4)_2S_2O_8$	0.05055	90.00	71.01	−0.23	....
	28	0.0960	$(NH_4)_2S_2O_8$	0.05055	78.10	71.30	+0.06	....
	29	0.1168	$(NH_4)_2S_2O_8$	0.05055	95.15	71.40	+0.16	....
	30	0.1212	$(NH_4)_2S_2O_8$	0.05055	98.85	71.49	+0.25	....
						Av. 71.23	Av. 0.18	
Sample 204-2, reground	31	0.08840	$(NH_4)_2S_2O_8$	0.05055	71.60	70.99	−0.11	....
	32	0.12975	$(NH_4)_2S_2O_8$	0.05055	105.25	71.10	±0.00	....
	33	0.12130	$(NH_4)_2S_2O_8$	0.05055	98.45	71.14	+0.04	....
	34	0.12765	$(NH_4)_2S_2O_8$	0.05055	103.76	71.24	+0.14	....
	35	0.14065	$KMnO_4$	0.05055	113.97	71.02	−0.08	....
	36	0.08890	$KMnO_4$	0.05055	72.10	71.08	−0.01	....
	37	0.12985	$KMnO_4$	0.05055	106.10	70.94	−0.16	....
	38	0.11475	$KMnO_4$	0.05055	93.34	71.29	+0.19	....
						Av. 71.10	Av. 0.09	
Sample 64	39	0.09660	$KMnO_4$	0.05055	....	67.81	−0.09	−0.09

thermometer difficult to read. Only an Anschütz type of thermometer should be used. A convenient size of thermometer is 135 mm. (5.25 inches) long, calibrated over the range 180° to 250° C. in single degree intervals. No trouble has been encountered in the use of this type of thermometer and the markings can be easily read, even in contact with fumes from perchloric acid and sulfuric acid.

The authors know of no suitable substitute, except quartz flasks for 500-ml. Pyrex Erlenmeyer flasks in these analyses. A refluxing still head of the design shown in Figure 1 is a necessity.

The Pyrex tube, *A*, is 25 mm. (1 inch) in outside diameter. The flange is 35 mm. (1.375 inches) in outside diameter and is made 50 mm. (2 inches) from the top opening. The vent in the side of the tube is 6 mm. (0.25 inch) in diameter, located 50 mm. (2 inches) below the flange. The bottom construction is 9 mm. (0.375 inch) in outside diameter and extends 50 mm. (2 inches) below the wide portion of tube *A*. The end of the refluxing still head should make contact with the side wall of the reaction flask. The assembly of 500-ml. Erlenmeyer flask, Anschütz thermometer, refluxing still head, and modified Rodgers ring burner leaves nothing to be desired. The solution of the sample and subsequent oxidation can be carried out without the use of a fume hood. If substitute equipment and modified apparatus assemblies are used, the experimental conditions as described must be adhered to closely or unsatisfactory results will be obtained.

Reagents and Chemicals Employed

Standard ferrous sulfate solution is prepared in the usual manner and is best stored in an 18-liter bottle in contact with hydrogen, following the use of the Zintl and Rienäcker standard storage bottle and buret (*7*).

Standard ceric sulfate solution is pr pared from ceric ammonium sulfat $Ce(SO_4)_2 \cdot 2(NH_4)_2SO_4 \cdot 2H_2O$, by solution 0.5 to 1.0 *N* sulfuric acid, and is stan ardized using pure sodium oxalate in h dilute perchloric acid solution. The dete mination of the ratio between ferrous a ceric sulfates completes the standardiz tion.

Ferroin indicator in 0.025 *M* concentr tion can be purchased already prepared

Phosphoric acid, 85 per cent sirupy pho phoric acid, U. S. P. grade.

Perchloric acid, 72 per cent free fro chromium, either C. P. or technical grade

Sulfuric acid, 95 per cent chromium-fr is diluted with water to make 80 per ce strength (by volume).

Mixed perchloric and sulfuric aci (ferrochrome oxidant). Equal parts volume of 72 per cent perchloric and per cent sulfuric acids.

Ammonium persulfate. Any high-gra crystalline form is applicable.

Standard Ferrochrome. U. S. Bure of Standards sample 64 (high carbo British Chemical Standards high- and lo carbon ferrochrome samples 204-2 a 203-2. The certificate values for the latter samples had not been issued at t time of the present work.

Development of the Method

A study of the proper proportion phosphoric acid as solvent and of mix perchloric and sulfuric acids as oxida was first made. Five milliliters of per cent phosphoric acid are suitab for dissolving a 100- to 125-mg. sa ple and 15 ml. were finally chosen the most desirable proportion of fer chrome oxidant.

A study was then made of the prop temperature and time of heating of t dissolved sample with the mixed aci for complete oxidation. An oxidati temperature of 205° C. for 3 minutes was found adequa for low-carbon ferrochrome, but 5 minutes at 210° C. we required in the case of high-carbon ferrochrome. The con tions finally chosen were the same for both high- and low-c bon samples: 10 minutes for solution of sample, 5 minut for oxidation at 210° C., followed by dropping the te perature to 205° C. before adding permanganate, and ra or leisurely cooling followed by persulfate treatment. O half hour per sample is required for the permanganate pr ess and 45 minutes for the persulfate method. By analyzi a number of samples concurrently, the average time per sa ple is materially reduced.

Final Test Analyses

A long series of analyses of the new British Bureau of Stan ards ferrochromes 203-2 and 204-2 was carried out by t authors in the capacity of referee analysts, using as cont U. S. Bureau of Standards ferrochrome 64, having a certific value of 67.9 per cent chromium. Analyses of each sam by each method were carried out concurrently. The unkno sample series constituted the major portion of the work. study was made of the degree of nonuniformity of t unknown high-carbon ferrochrome 204-2 by making a compa son between a series of analyses on the reground and mix sample and the sample as received. The results are shown Table I.

Table I shows a close agreement in the analysis of lo carbon ferrochrome (sample 203-2) by the two procedur

Table II. Summary of Results of All Analyses

Sample	Method of Analysis	Average Chromium Content	Mean Deviation from Average	Number of Determinations
		%	%	
)4-2	$KMnO_4$	71.11	0.14	9
4	$KMnO_4$	67.97	0.05	5
)3-2	$KMnO_4$	69.12	0.03	4
)3-2	$(NH_4)_2S_2O_8$	69.15	0.03	3
)4-2	$(NH_4)_2S_2O_8$	71.29	0.18	9
)4-2 reground	$(NH_4)_2S_2O_8$	71.12	0.07	4
)4-2 reground	$KMnO_4$	71.00	0.12	4

he agreement in the analyses of high-carbon ferrochrome ample 204-2) is not so close, the persulfate method giving e higher results (71.20 as compared to 71.11 per cent). The ean deviation of values from the average shows a greater egree of uniformity in samples 203-2 and 64 than in sample)4-2. This is shown by the results obtained with reground)4-2. With Bureau of Standards sample 64 the two procedures gave practically the same close agreement with the certificate value, 67.9 per cent chromium but the persulfate values are omitted from Table I in the interests of brevity. The results in Table I are in all series consecutive determinations with no omissions, but a number of series of results were omitted because of obviously unsatisfactory individual analyses.

Literature Cited

(1) Smith, Ind. Eng. Chem., Anal. Ed., 3, 88 (1931).
(2) Smith, *Ibid.*, **8**, 484 (1936).
(3) Smith, McHard, and Olsen, *Ibid.*, **8**, 350 (1936).
(4) Smith, McVickers, and Sullivan, *J. Soc. Chem. Ind.*, **54**, 369T (1935).
(5) Smith and Smith, *Ibid.*, **54**, 185T (1935).
(6) Willard and Thompson, Ind. Eng. Chem., Anal. Ed., 3, 399 (1931).
(7) Zintl and Rienäcker, *Z. anorg. allgem. Chem.*, **155**, 84 (1926).

Received June 7, 1937.

Titration of Aromatic Amines with Nitrous Acid

JOSEPH PHILLIPS with ALEXANDER LOWY, University of Pittsburgh, Pittsburgh, Pa.

A STUDY of the literature reveals that although the titration of the monoamines with nitrous acid has been inestigated to some extent, very little work has been done on e diamines, and no work has been done on the quantitative tration of monocyclic triamines. Of the monoamines, aniine has been most carefully studied (*6, 9, 13*). The titration f sulfanilic acid is well known and indeed this reaction has een applied as a means of standardizing sodium nitrite solu-ons (*11, 14*). Among the other monoamines quantitatively trated are: *o*- (*1*), *p*- (*1, 11*), and *m*-aminobenzenesulfonic cids (*1, 8*); dehydrothio-*p*-toluidine sulfonic (*10*); 3-amino--hydroxytoluene (*3*); *o*- and *p*-toluidine (*9, 15*); *o*- and -anisidine (*15*); *p*-phenetidine (*15*); 5-aminosalicylic acid *15*); *p*-nitroaniline (*9, 10*); *o*- (*5*) and *p*- (*15*) aminophenol; nd *m*-xylidine (*9*). Of the diamines, 2,4-diaminophenol (*2*) nd 3,5-diamino-*o*-cresol (*4*) have been titrated.

Although there is no reference in the literature to the comlete diazotization of monocyclic triamines, in a previous aper (*12*) the authors found it necessary to determine the ields of triamine formed. Two methods were tried. The rst method—adding sodium nitrite solution slowly to the mine solution until a faint permanent end point appeared n starch-potassium iodide paper—gave low results. The econd method—using excess of sodium nitrite solution and ack-titrating with standard aniline hydrochloride or sulfnilic acid solution—gave fairly quantitative results, and as therefore used. Methods for back-titrating have been escribed (*7, 10*), but a more direct method was desired.

Purification of Amines

In general the triamines were purified in the following anner:

A sample of the triamine was dissolved in a little warm water, reated with boneblack, and filtered under an atmosphere of atural gas. The filtrate was chilled and saturated with hyrogen chloride gas. The resultant precipitate was filtered, ashed with several portions of alcohol-ether and ether, and then ried in a vacuum desiccator over potassium hydroxide and calum chloride for 48 hours. The purity of some of the triamines was then checked by elementary analysis (*12*). The mono- and diamines were purified by distillation and crystallization.

Standardization of Sodium Nitrite Solution

Approximately 0.1 *N* sodium nitrite solution was standardized with aniline hydrochloride, sulfanilic acid, and potassium permanganate solutions, yielding 0.1099 *N*, 0.1093 *N*, and 0.1132 *N*, respectively.

General Procedure

A known weight of the purified amine or amine hydrochloride given in Table I was dissolved in 100 cc. of aqueous solution containing 10 cc. of concentrated hydrochloric acid in a glass-stoppered Erlenmeyer flask. The sodium nitrite was added, dropwise, at 20° to 23° C. (not more than 2 cc. per minute) until a test drop immediately turned starch-potassium iodide paper strongly blue. The flask was then stoppered and allowed to stand (with occasional shaking) for 15 minutes. If a test drop of the solution after this time gave only a faint end point or no end point, then 2 cc. more of the sodium nitrite solution were added and the procedure was repeated. If, however, a test drop still gave a strong end point after 15 minutes, the solution was back-titrated with standard aniline hydrochloride (0.100 *N*) or sulfanilic acid (0.100 *N*) solution till only a faint end point persisted.

Because there was usually about 2 cc. excess of sodium nitrite solution for 15 minutes before back-titration, and because nitrous acid is relatively unstable, especially at room temperature, a blank determination was made to determine the amount of sodium nitrite solution lost. The sodium nitrite solution lost in this way was not utilized in the reaction and was therefore subtracted from the total amount of sodium nitrite used. When 2 cc. of (0.110 *N*) sodium nitrite solution were added to 100 cc. of aqueous solution containing 10 cc. of concentrated hydrochloric acid, allowed to stand (with occasional shaking) for 15 minutes, and then back-titrated with standard aniline hydrochloride solution, a loss of 0.20 cc. of sodium nitrite solution occurred. When 25 cc. of concentrated hydrochloric acid were used, a loss of 0.23 cc. of sodium nitrite solution occurred.

Results

Table I gives the results obtained by titrating varying amounts of the amines. It was found that 2,4,6-triaminochlorobenzene (*D*) could not be completely titrated in aqueous

TABLE I. RESULTS OF TITRATIONS

(Temperature, 20°–23° C.)

A = 2,4,6-triaminobenzoic acid·3HCl
B = 2,4,6-triaminotoluene·3HCl·H_2O
C = 1,3,5-triaminobenzene·3HCl
D = 2,4,6-triaminochlorobenzene·3HCl
E = metanilic acid
F = *m*-phenylenediamine
G = *m*-toluylenediamine·HCl
H = 2,4,6-triaminophenol·3HCl
I = 1,2,4-triaminobenzene·3HCl
J = *o*-phenylenediamine
K = *p*-phenylenediamine·2HCl

Compound	Weight	100 Cc. of Solution Containing:	$NaNO_2$ Used 0.110 *N*	$NaNO_2$ Used 0.117 *N*	Back-Titration Aniline-HCl, 0.100 *N*	Back-Titration Sulfanilic acid, 0.100 *N*	Titration
	Grams		*Cc.*	*Cc.*	*Cc.*	*Cc.*	%
A	0.0515	*d*	10.6	..	...	0.3	99.7
	0.1020	*d*	21.5	..	...	1.4	99.5
	0.1505	*d*	..	29.0	...	1.3	99.2
	0.2020	*d*	..	38.2	...	0.8	99.6
	0.2500	*d*	..	48.0	...	2.0	99.4
	0.0605	*d*	13.0	..	0.7	...	101.9
	0.1000	*d*	21.0	..	1.3	...	99.5
	0.1490	*d*	30.0	..	0.7	...	99.2
	0.2100	*d*	43.0	..	1.8	...	99.4
	0.1480[a]	*d*	27.0	..	0.0	...	92.4
B	0.0550	*d*	12.5	..	1.2	...	98.8
	0.1060	*d*	22.3	..	0.5	...	99.0
	0.1520	*d*	33.0	..	1.6	...	100.0
	0.1702	*d*	36.0	..	0.5	...	100.7
	0.2080	*d*	44.0	..	1.2	...	99.5
	0.1500	*d*	32.0	..	...	1.4	99.7
	0.1109[b]	*d*	20.0	..	1.0	...	82.6
C	0.0620	*g*	16.0	..	1.4	...	99.7
	0.1163	*g*	28.5	..	1.0	...	100.3
	0.1570	*g*	38.0	..	1.2	...	99.6
	0.2080	*g*	51.0	..	2.0	...	100.3
	0.2150	*g*	51.5	..	1.2	...	99.5
	0.1500	*g*	36.5	..	...	1.3	99.7
D	0.0650	*g·f*	15.5	..	1.0	...	96.8
	0.1120	*g·f*	26.0	..	1.3	...	99.3
	0.1600	*g·f*	36.0	..	1.9	...	99.5
	0.2005	*g·f*	44.0	..	2.1	...	98.5
E	0.0540	*g*	..	6.1	...	0.6	100.6
	0.1200	*g*	..	13.2	...	1.2	100.9
	0.2090	*g*	..	21.2	...	0.5	99.4
	0.2500	*g*	..	25.6	...	1.0	99.4
	0.3045	*g*	..	31.1	...	1.1	99.6
F	0.0648	*g*	..	22.3	...	2.0	99.4
	0.1106	*g*	..	36.5	...	1.8	99.0
	0.1530	*g*	..	49.5	...	1.8	98.6
	0.2004	*g*	..	65.0	...	2.2	99.2
G	0.0604	*g*	..	14.5	...	1.5	99.8
	0.1125	*g*	..	26.2	...	2.0	100.1
	0.1510	*g*	..	34.0	...	1.6	99.6
	0.2003	*g*	..	45.1	...	2.0	100.0
H	0.0540[c]	*d*	8.5	..	0.6	...	65.4
	0.1010[c]	*d*	16.0	..	1.0	...	67.2
	0.1340[c]	*d*	21.0	..	1.1	...	67.3
	0.1750[c]	*d*	27.0	..	0.8	...	67.9
	0.2200[c]	*d*	33.0	..	0.5	...	67.0
	0.2748[e]	*d·f*	55.0	..	3.0	...	83.7
	0.1785[e]	*d*	31.0	..	2.5	...	72.8
	0.1505[c]	*g*	24.0	..	1.1	...	68.9
I	0.0562	*d*	7.2	..	0.6	...	48.9
	0.1062	*d*	14.0	..	1.3	...	50.6
	0.1555	*d*	20.0	..	1.4	...	50.8
	0.2300	*d*	27.5	..	0.5	...	49.7
	0.1528[h]	*g*	21.5	..	0.5	...	58.1
	0.2000[i]	*d·f*	30.0	..	1.0	...	58.8
J	0.0560	*d*	..	10.5	...	1.6	50.5
	0.1013	*d*	..	17.5	...	1.4	50.3
	0.1573	*d*	..	26.0	...	1.3	49.6
	0.2075	*d*	..	34.5	...	1.4	50.4
K	0.0540	*g*	..	6.5	...	1.5	48.6
	0.1160	*g*	..	12.0	...	1.0	49.8
	0.1606	*g*	..	17.0	...	1.9	50.0
	0.2010	*g*	..	20.0	...	1.2	49.4
	0.2760	*g*	..	27.5	...	1.5	49.8

[a] Without back-titration the result is low.
[b] Temperature was kept at 0–5° C.
[c] Temperature was kept at 5–10° C.
[d] Concentrated hydrochloric acid, 10 cc.
[e] Temperature was kept at 20–23° C.
[f] Ethyl alcohol, 20 cc.
[g] Concentrated hydrochloric acid, 25 cc.
[h] Use of 25 cc. of concentrated HCl gives higher results.
[i] Use of alcohol gives higher results.

solution, even if 25 cc. of concentrated hydrochloric acid were used; however, the addition of ethyl alcohol (20 cc.) gave almost quantitative results. As a preliminary check, a blank determination was made using a solution containing, 55 cc. of water, 25 cc. of concentrated hydrochloric acid, and 20 cc. of ethyl alcohol. It was found that 1.5 cc. o sodium nitrite (0.110 *N*) had to be added before a faint en point could be obtained on starch–potassium iodide pape hence this amount plus 0.23 cc. was subtracted when the amin was titrated.

Metanilic acid (*E*) was investigated because the literatu contains no reference to its rapid quantitative titration. Th method of Doolittle (*8*) requires 12 to 15 hours for quant tative results.

The accuracy of the titration of *m*-phenylenediamine (*F* was limited somewhat by the appearance of a false end poi which appeared before the true end point (at about 85 pe cent complete titration) and which turned starch–potassiu iodide paper bluish black. However, this color did not for instantaneously on the potassium iodide paper, and coul therefore be differentiated from the true end point.

Titration of 2,4,6-triaminophenol (*H*), using 100 cc. o solution containing 10 cc. of concentrated hydrochloric ac at 10° C. (maximum temperature), gave only two-thir complete titration. The use of higher temperatures an more acid gave higher and variable results. Thus for co sistent results the temperature and concentration of hydr chloric acid must be kept within fairly close limits.

1,2,4-Triaminobenzene (*I*), *o*-phenylenediamine (*J*), an *p*-phenylenediamine (*K*) were approximately 50 per ce titrated.

Summary

Since most aromatic amines cannot be quantitativel titrated with nitrous acid in a short time by the usual dire manner, a method was devised by which excess sodium n trate is used, and the excess back-titrated with standa aniline hydrochloride or sulfanilic acid solutions (both which react rapidly with sodium nitrite). The amines t trated were: 2,4,6-triaminobenzoic acid, 2,4,6-triaminotol ene, 1,3,5-triaminobenzene, 2,4,6-triaminochlorobenzene, me anilic acid, *m*-phenylenediamine, *m*-toluylenediamine, 2,4, triaminophenol, 1,2,4-triaminobenzene, *o*-phenylenediamin and *p*-phenylenediamine.

Literature Cited

(1) Amantiov and Titkov, *Anilinokrasochnaya Prom.*, **2**, No. 8–24–6 (1932).
(2) Bradt and Brown, *Trans. Electrochem. Soc.*, **56**, 429 (1929).
(3) Bradt and Hart, *Ibid.*, **60**, 205 (1931).
(4) Bradt and Linford, *Ibid.*, **69**, 353 (1936).
(5) Brown and Warner, *Trans. Am. Electrochem. Soc.*, **41**, 225 (1922
(6) Bucherer, in Lunge-Berl, "Chemisch-technische Untersuchung methoden," 7 Aufl., Vol. IV, p. 897, Berlin, Julius Springe 1924.
(7) Chervinskaya, Russian Patent 39,774 (Nov. 30, 1934).
(8) Doolittle, *Trans. Am. Electrochem. Soc.*, **45**, 57 (1924).
(9) Jones and Lee, IND. ENG. CHEM., **16**, 948 (1924).
(10) Lee and Jones, *Ibid.*, **16**, 930 (1924).
(11) Lunge, *Chem.-Ztg.*, **28**, 501 (1904).
(12) Phillips and Lowy, *Trans. Electrochem. Soc.*, **71** (preprint) (1937
(13) Sabalitschka and Schrader, *Z. angew. Chem.*, **34**, Aufsatzteil (1921).
(14) Schultz and Vaubel, *Z. Farben-Ind.*, **1**, 37, 149, 339 (1902).
(15) Ueno, Shigezo, and Sekiguchi, Haruo, *J. Soc. Chem. In Japan*, **37**, Suppl. Binding, 235–7 (1934).

RECEIVED June 2, 1937. Contribution 344 from the Department of Che istry, University of Pittsburgh, Pittsburgh, Pa.

Extraction of Minute Amounts of Morphine

Use of Pyrogallol for Preventing Losses Due to Oxidation

CHARLES E. MORGAN, New York State Racing Commission Laboratory, New York, N. Y.

THE literature (*1–4*) contains many references to the ease with which morphine is oxidized, especially in alkaline solutions where the oxidation may be accomplished by atmospheric oxygen. In customary quantitative procedures, dealing with sensible quantities of the alkaloid, the extent of oxidation may be of slight importance, and the author has been unable to find any reference describing other than usual precautions to prevent oxidative changes.

In the qualitative analysis of horse saliva for the detection of drugs which may have been administered to the animal, such drugs, of which morphine is one, are present in very minute quantities in most instances. The loss of an otherwise insignificant amount of the drug therefore becomes, in this work, of paramount importance.

The routine method used in this laboratory for the analysis of saliva is a modification of the classic Stas-Otto (*1, 2, 3*) procedure for the isolation of alkaloids and related drugs. After preliminary purification procedures, any alkaloid present is contained in a small amount of acidified water. This solution is extracted (*A*) with successive, equal portions of ether, made alkaline with sodium hydroxide, and again extracted (*B*) with ether, then neutralized with hydrochloric acid, made alkaline with ammonium hydroxide, and, after addition of a little alcohol, extracted (*C*) with a hot chloroform-alcohol mixture (9 plus 1). Morphine, if present in minute amount, is contained only in the *C* extract, and will have been subjected to oxidation by atmospheric oxygen during both the *B* and *C* extractions.

In a series of analyses designed to determine the limit of sensitivity of the method, it was found that the final extraction residues from saliva samples to which had been added 250, 100, and 25 gamma of morphine gave evidence, by the formation of precipitates with general alkaloidal reagents, of the presence of an alkaloidal substance in each in graduated amounts. However, characteristic color tests and formation of typical microcrystals were obtained only in the case of samples to which the largest amount of morphine (250 gamma) had been added, and these identifying tests were weak in view of the comparatively large amount of morphine which had been used. It was therefore concluded that when amounts of morphine less than 250 gamma were used, atmospheric oxygen was converting the alkaloid to pseudomorphine or similar oxidation products which were capable of giving amorphous precipitates with general alkaloidal reagents, but which, of course, would not give tests characteristic of morphine. It was accordingly felt that if a method could be devised for the prevention of oxidation, its use would tend to prove these suppositions and at the same time render the general method more sensitive for the detection of morphine.

As the oxygen-absorbing qualities of alkaline pyrogallol solutions are well known, it was thought that the introduction of pyrogallol into the alkaline solutions containing morphine might inhibit the oxidation of the alkaloid.

Experimental

To three 10-cc. portions of water were added, respectively, 250 gamma of morphine (as sulfate), 250 gamma of morphine (as sulfate) and 0.1 gram of pyrogallol, and 0.1 gram of pyrogallol. Each solution was analyzed as follows:

Sufficient dilute sodium hydroxide was added to make the solution distinctly alkaline to litmus. It was then extracted three times with equal volumes of ether, and the ether extracts were combined and washed three times with 2-cc. portions of water containing 10 drops of 20 per cent sodium hydroxide solution in each 100 cc. The ether was then dried with anhydrous sodium sulfate and evaporated. The residue from evaporation was dissolved in a small amount of slightly acidified water and drops of the solution were tested with various alkaloidal precipitants and color reagents with negative results. The alkaline aqueous solution remaining after the extraction with ether was neutralized with dilute hydrochloric acid, made alkaline with ammonium hydroxide, and, after addition of 1 cc. of alcohol, extracted three times with equal volumes of hot chloroform-alcohol mixture (9 plus 1). The extracts were combined and washed three times with 2-cc. portions of ammoniacal water-alcohol mixture (75 cc. of water, 25 cc. of alcohol, 10 drops of ammonium hydroxide). The extract was then dried with anhydrous sodium sulfate and evaporated.

The residue from evaporation was dissolved in a small amount of slightly acidified water and tested for morphine with alkaloidal precipitants and color reagents. Strongly positive tests were obtained with the residue from the morphine-pyrogallol solution, weakly positive tests with the residue from the morphine solution without pyrogallol, and negative tests with the residue from the solution containing only pyrogallol.

NOTES. The *B* residues (those from the ether extractions of the solutions alkaline with sodium hydroxide) were tested because it was desired to make certain that no impurities would be introduced through the use of pyrogallol which would interfere with the detection of alkaloids that might be present in these residues in routine use of the method.

Both the ether and the chloroform-alcohol extracts were slightly colored, presumably because of extraction of oxidation products of pyrogallol. This has since been found not to be an invariable condition, the extracts frequently being colorless even when made under seemingly identical conditions. In any event the washings with alkaline water or water-alcohol mixture readily remove the color from the solvents.

To three samples of horse saliva measuring about 150 cc. were added 250 gamma, 100 gamma, and 25 gamma, respectively, of morphine (as sulfate). These samples were analyzed by the routine procedure except that the extractions with immiscible solvents were made in the manner just described, adding 0.1 gram of pyrogallol to the acid aqueous solutions following the *A* extractions. In each case morphine was recovered and identified both by the formation of characteristic microcrystals and by color tests with appropriate reagents. In the case of the sample to which 25 gamma of the alkaloid had been added, the color test was stronger and the microcrystals better formed than in the case of the 250-gamma sample run without using pyrogallol. This tended to prove that atmospheric oxidation had been responsible for considerable loss of morphine, that pyrogallol used as described greatly minimized loss by oxidation, and that the use of pyrogallol increased the sensitivity of the method toward morphine by more than ten times.

Occasionally slight amorphous or crystalline precipitates are obtained when Kraut's reagent is added to the solutions of the *B* and *C* residues. Experiments indicate that this is due to some pyrogallol oxidation product which is not removed by the washings. It does not, however, interfere with alkaloid detection, nor are such precipitates formed with any other reagent than Kraut's.

To ascertain whether use of pyrogallol would affect results with other alkaloids, duplicate samples were prepared containing graduated amounts of strychnine, heroin, cocaine, and caffeine. One set of samples was analyzed with and the other without pyrogallol. With the exception of those containing caffeine, all samples gave as good or better results

with pyrogallol than without. The results with heroin, which during the process of analysis is in large part hydrolyzed to morphine, were improved in about the same degree as those with morphine itself. Otherwise better results were probably due to more thorough elimination of traces of impurities by reason of washing solvents after extraction. The sensitivity of the method toward caffeine was somewhat decreased, probably because of loss in washing the solvents. As this alkaloid is recovered in the *A* extract, which is not washed, as well as in the *C* extract, the slight loss is not serious.

Summary

The use of pyrogallol will prevent serious loss of morphine due to oxidation in alkaline solution during extraction with immiscible solvents.

A method for its use and comparative results without i use are described.

The use of pyrogallol in the manner described does n interfere with the detection of other alkaloids (cocaine, stryc nine, and caffeine).

Literature Cited

(1) "Allen's Commerical Organic Analysis," 5th ed., Vol. V "The Vegetable Alkaloids," Philadelphia, P. Blakiston's S & Co., 1929.
(2) Autenrieth, W., "Laboratory Manual for the Detection Poisons and Powerful Drugs," tr. by W. H. Warren, 6 American ed., Philadelphia, P. Blakiston's Son & Co., 19
(3) Peterson, Haines, and Webster, "Legal Medicine and To cology," 2nd ed., Vol. II, W. B. Saunders Co., 1923.
(4) Small, L. F., and Lutz, R. E., "Chemistry of the Opium Al loids," *Suppl. Pub. Health Repts.* **103** (1932).

Received May 25, 1937.

Determination of Primary Calcium Phosphate

In Mixtures of the Calcium Orthophosphates

H. V. TARTAR, ISABEL S. COLMAN, AND LUELLA L. KRETCHMAR, University of Washington, Seattle, Wash.

THE unsatisfactory state of the methods for analyzing mixtures of the calcium phosphates (*1, 6–9, 12, 13*) is well recognized and is due primarily to the fact that the methods are largely empirical. It is the purpose of this paper to present a new method, which is free from empiricism, for the determination of primary calcium phosphate in mixtures of the calcium orthophosphates. The method involves the titration of the primary calcium phosphate, $Ca(H_2PO_4)_2$, with 0.2 *N* sodium hydroxide solution to a definite pH to determine the amount of this phosphate in the sample.

Preparation of Materials and Methods of Analysis

Primary calcium phosphate was prepared by adding to a suspension of commercial secondary calcium phosphate (C. P. analyzed quality), the theoretical amount of phosphoric acid, calculated from the solubility curve of Cameron and Seid (*2*) where the primary salt is the solid phase. The solution w filtered and evaporated until crystals started to form which we then allowed to separate out slowly. The crystals were filter on a Büchner funnel, washed with 95 per cent alcohol and fina with anhydrous ether, dried for 15 minutes at 100° C., and ke in a desiccator over calcium chloride. Analyses of the produ showed it to be the pure monohydrate of primary calcium ph phate, $Ca(H_2PO_4)_2 \cdot H_2O$, with a P_2O_5/CaO ratio of 2.53 in p fect agreement with the theoretical value.

To prepare secondary calcium phosphate, the primary c cium phosphate was dissolved in water and a little phospho acid. Carbon dioxide–free sodium hydroxide was then adc slowly until the solution had a pH of 3.8, using bromophe blue as an indicator. The crystals of secondary calcium ph phate that separated out at this hydrogen-ion concentrat were filtered off, washed first with alcohol and then with eth and air-dried. Upon analysis this proved to be the dihydr of secondary calcium phosphate, $CaHPO_4 \cdot 2H_2O$, having t theoretical P_2O_5/CaO ratio of 1.27.

Tertiary calcium phosphate was prepared by dissolving 2 grams of secondary calcium phosphate in a little nitric acid w subsequent dilution with distilled water to a volume of nearl liters. A moderate excess of carbonate-free ammonium hydr ide was then added rapidly with continual stirring. Beca of the gelatinous nature of the precipitate it was washed eig times by decantation, using 4 liters of distilled water each ti It was then filtered on a Büchner funnel, washed with alcol then with ether, and air-dried. The P_2O_5/CaO ratio of this m terial was found to be 0.829, slightly below the theoretical 0.8 for pure tricalcium phosphate.

Carbonate-free ammonia was prepared by allowing ammoni hydroxide to stand overnight in contact with an excess of c cium hydroxide, and then distilling into carbon dioxide–fe distilled water.

Calcium was determined by the sulfate method as outlined Gooch (*5*), and phosphorus by the customary molybdate meth with the final precipitation as magnesium ammonium phosph

The hydrogen-ion concentration was determined both col metrically and electrometrically. For the first method a se of buffer solutions with pH values ranging from 3.0 to 7.0, w intervals of 0.2 pH, was prepared as described by Clark and L (*3*). The indicator solutions used were those recommended Clark and Lubs (*3*) for this range, and 5 drops were used each 10 cc. of solution to be tested.

For the electrometric method a cell was used, consisting c normal calomel electrode, a saturated potassium chloride bric a lightly platinized platinum electrode, and hydrogen which bubbled through pyrogallol solution and two vessels with wa The electromotive force was read by means of a Leeds & No rup potentiometer, and the pH was calculated from the equat

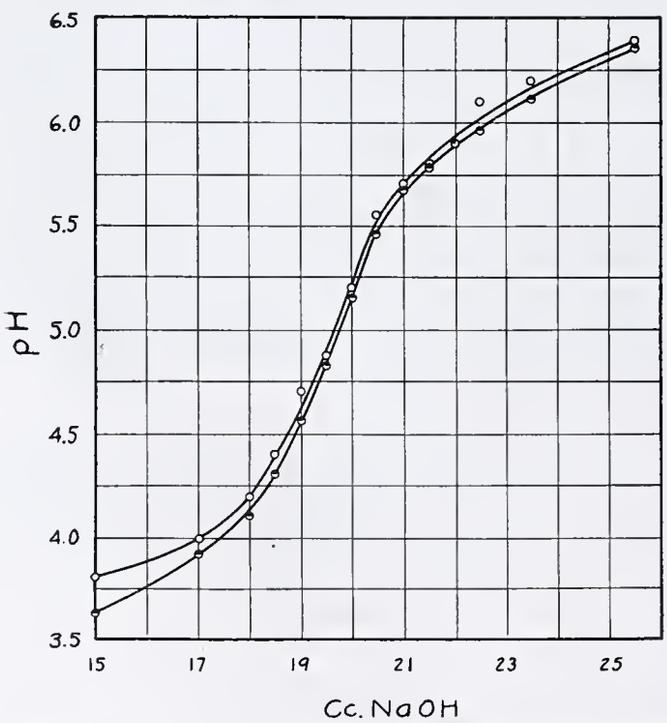

Figure 1. Titration of Primary Calcium Phosphate with Sodium Hydroxide

○, colorimetric pH
◓, electrometric pH

$$pH = \frac{e.\ m.\ f. - 0.2805}{0.00019844\ T}$$

Using this setup, it was possible to obtain duplicate values for the pH ± 0.01.

Titration of Primary Calcium Phosphate

To determine the amount of primary calcium phosphate in the sample, the material was titrated with 0.2 *N* sodium hydroxide to a definite hydrogen-ion concentration and the amount of titrating solution was compared with that necessary to reach the same pH in a sample that was pure primary calcium phosphate.

Table I. Titration of Primary Calcium Phosphate with Sodium Hydroxide

Indicator	0.2 *N* NaOH	pH, Colorimetric	pH, Electrometric	Ca Remaining in Solution as Mg. of $Ca(H_2PO_4)_2 \cdot H_2O$
	Cc.			
Bromophenol blue	15.0	3.8	3.63	202.24
	17.0	4.0	3.92	116.45
	18.0	4.2	4.11	70.11
	18.5	4.4	4.30	46.01
Methyl red	18.5	4.4		
	19.0	4.7	4.56	32.33
	19.5	4.9	4.83	16.79
	20.0	5.2	5.15	8.23
	20.5	5.5	5.46	...
Bromocresol purple	20.5	5.6		
	21.0	5.7	5.68	4.78
	21.5	5.8	5.79	...
	22.0	5.9	5.91	...
	22.5	6.1	5.97	1.44
	23.5	6.2	6.11	...
	25.5	6.4	6.37	...

The results are given in Table I. The second column gives the number of cubic centimeters of sodium hydroxide used, the third and fourth the pH determined by the two methods, and the last the total calcium in the solution calculated as milligrams of primary calcium phosphate. The titration curve obtained by the two methods is shown in Figure 1. There is a constant difference (average deviation 0.07 pH) between the pH determined by the two methods. This is probably due to the "salt effect" upon the indicators, giving pH values from the colorimetric method consistently higher than those obtained electrometrically. The residual calcium in the solution is shown in Figure 2, where the values

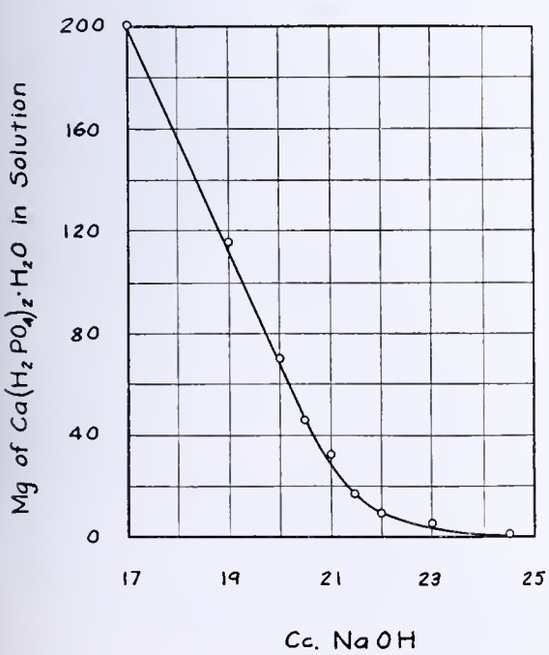

Figure 2. Residual Calcium in Solution during Titration of Primary Calcium Phosphate

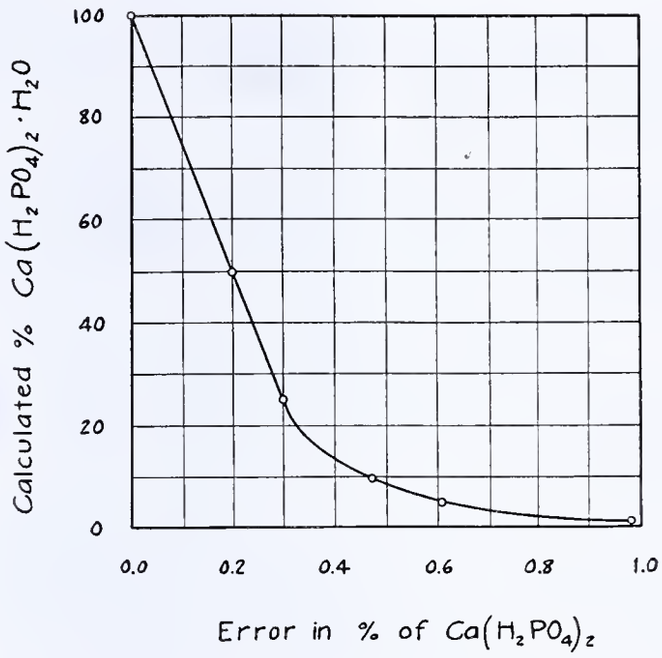

Figure 3. Error in Per Cent of Primary Calcium Phosphate

in the last column of Table I are plotted against the cubic centimeters of sodium hydroxide.

Almost any point on the curve in Figure 1 could be used as a so-called end point for the titration. The theoretical number of cubic centimeters, if the reaction took place in accordance with the following equation,

$$Ca(H_2PO_4)_2 \cdot H_2O + NaOH = CaHPO_4 \cdot 2H_2O + NaH_2PO_4$$

would be 19.83 cc. Some value near this point should be chosen as an end point, because the almost complete neutralization of the primary salt gives an unbuffered solution which shows a greater change in pH for a small addition of sodium hydroxide. At this point there is but a small amount of the primary calcium phosphate still in the solution (9.78 mg.).

In all further work the point on the curve represented by 20 cc. for a solution having a pH of 5.15 electrometrically and 5.2 colorimetrically was taken as the end point of titration.

In running a titration on an actual sample of less than 100 per cent of primary calcium phosphate, an error is introduced, due to the fact that 7.0 cc. of water are added to each sample. This increases the dilution of the primary calcium phosphate, so that the pH of the end point of titration will be reached before the equivalent amount of sodium hydroxide has been added. To determine the error introduced, different amounts of primary calcium phosphate were weighed out and dissolved in 7.0 cc. of water. These were then titrated with the sodium hydroxide, using the hydrogen-electrode titrating vessel, to a pH of 5.15.

Table II. Error in Titration of 1-Gram Sample of Phosphate

$Ca(H_2PO_4)_2 \cdot H_2O$ Titrated	$Ca(H_2PO_4)_2 \cdot H_2O$ Present	$Ca(H_2PO_4)_2 \cdot H_2O$ Calcd. from Titration	Error for 1-Gram Sample
Gram	%	%	%
1.0000	100	100.00	0.00
0.5000	50	49.80	0.20
0.2500	25	24.70	0.30
0.1000	10	9.53	0.47
0.0500	5	4.39	0.61
0.0200	2	1.01	0.99

The results are given in Table II, the first column giving the number of grams of primary calcium phosphate titrated, the second giving the actual per cent of primary calcium phos-

phate present, the third column showing the per cent of the primary phosphate as calculated from the titration, and the last column giving the percentage error on a 1-gram sample due to dilution.

The results are also given in Figure 3, where the calculated per cent present is plotted against the error in per cent of primary calcium phosphate. Reading from this curve it is possible to find the error for every per cent of primary calcium phosphate found from the titration and thus make the necessary correction due to dilution.

Outline of Method of Analysis

With the data at hand a method for the quantitative determination of primary calcium phosphate in a mixture of primary, secondary, and tertiary phosphates of calcium can now be outlined.

If the sample contains only primary or only primary and secondary calcium phosphates, weigh out 1-gram samples of the material to be analyzed and place in the hydrogen-electrode vessel. Add 7.0 cc. of water and titrate with the alkali solution to a pH of approximately 5.15. Compare the number of cubic centimeters used with the curve given in Figure 1 and calculate the per cent of primary calcium phosphate present. To make the necessary correction for dilution, read from the curve in Figure 3 the amount to be added to the per cent calculated.

If, however, the sample is a mixture also containing tertiary calcium phosphate, the following method should be used:

Grind the sample to a very fine powder. The importance of thorough grinding cannot be too strongly emphasized, if accurate results are desired. Weigh out carefully two 1-gram portions of the sample, place one in the titrating vessel, add 7 cc. of distilled water, and then slowly 0.2 N sodium hydroxide until the solution has a pH of about 5.15. Note the volume of alkali used. Wash and dry the titrating vessel, add 7 cc. of water and the same amount of alkali as was used in the titration just completed, and in addition about 0.5 cc. more. To this alkali solution add the other 1-gram portion and stir thoroughly for a few minutes; this procedure is followed to prevent the primary salt from reacting with the tertiary. Determine the pH of the solution, remembering to stir it at intervals until the potentiometer reading remains constant after two consecutive stirrings.

The per cent of primary calcium phosphate present can be calculated as before.

As an alternative procedure, the pH may be determined colorimetrically, but because of inherent inaccuracies, the percentages of primary calcium phosphate are only reliable to ± 0.20 per cent.

To compare this work with other research along similar lines, the following calculations were made: The mass law equation for the second ionization constant of phosphoric acid may be written

$$\frac{(a_{H^+})\ (m_{(HPO_4^{--})})\ \gamma_2}{(m_{H_2PO_4^-})\ \gamma_1} = K_2 \qquad (1)$$

and also in the following logarithmic form:

$$pH + \log \frac{m_{H_2PO_4^-}}{m_{HPO_4^{--}}} = pK - \log \frac{\gamma_1}{\gamma_2} \qquad (2)$$

where pK is the negative logarithm of K_2.

To make use of Equation 2, first the total number of moles of phosphate ion and of calcium ion left in solution at the end point chosen were calculated, and were found to be (3.998) (10^{-3}) and (3.263) (10^{-5}), respectively. To find how the phosphate was distributed between the primary and secondary ions, Equation 2 was applied. The value of pH was taken from Table I, and pK was found from Nims' (*11*) value for the second ionization constant of phosphoric acid (6.226) (10^{-8}). The ratio of the activity coefficients was calculated from the relationship given by Cohn (*4*)

$$\log \frac{\gamma_1}{\gamma_2} = \frac{1.5\sqrt{\mu}}{1 + 1.65\sqrt{\mu}}$$

where μ is the ionic strength (*10*) of the solution. Since μ i a function of the concentrations of the phosphate ions, method of successive approximations was used to find th ratio desired. Starting with the assumption that $\gamma_1 = \gamma_2$ the second solution of Equation 2 gave the consistent values

$$\frac{m_{H_2PO_4^-}}{m_{HPO_4^{--}}} = 50$$

$$\log \frac{\gamma_1}{\gamma_2} = 0.36$$

$$\mu = 0.1549$$

Using this ratio of molarities, there were found to be (3.92 (10^{-3}) mole of primary phosphate ion and (7.84) (10^{-5}) mol of the secondary. Based upon these figures and the as sumption that only the four ionic species, Ca^{++}, Na^+ $H_2PO_4^-$, and HPO_4^{--} were present in significant quantities it was found that (4.01) (10^{-3}) mole of sodium ion wa needed for electroneutrality. This compares well with th (4) (10^{-3}) mole added.

Analyses of Samples

Samples of known mixtures of the primary with the sec ondary and with the tertiary calcium phosphate were ana lyzed for the primary phosphate with the results given i Table III. The data show that with the electrometric metho the results are accurate.

Table III. Analyses of Samples

Analyst	Ratio of Primary, Secondary, and Tertiary Calcium Phosphate	$Ca(H_2PO_4)_2 \cdot H_2O$ Present %	Found %
C	8–2–0	80.00	79.98
K	8–2–0	80.00	79.93
K	7–3–0	70.00	69.93
K	6–4–0	60.00	59.92
C	6–4–0	60.00	59.96
C	4–6–0	40.00	39.94
K	8–0–2	80.00	80.06
K	7–0–3	70.00	69.97
K	6–0–4	60.00	60.06
K	6–2–2	60.00	60.13

Summary

A new and accurate method for the determination of pri mary calcium phosphate in mixtures of the calcium ortho phosphates has been presented, in which the primary sal is determined by titrating to a pH of 5.15 with 0.2 N sodiur hydroxide solution.

Literature Cited

(1) Assoc. Official Agr. Chem., Official and Tentative Methods o Analysis, 19–23, 186 (1933).
(2) Cameron and Seidell, *J. Am. Chem. Soc.*, **27**, 1503 (1905).
(3) Clark, "Determination of Hydrogen Ions," p. 199, Baltimor Williams & Wilkins Co., 1928.
(4) Cohn, *J. Am. Chem. Soc.*, **49**, 182 (1927).
(5) Gooch, "Quantitative Chemical Analysis," p. 81, New Yorl John Wiley & Sons, 1912.
(6) Graire, *Chimie & Industrie*, **27**, 1023–36, 1274 (1932).
(7) Herd, *Cereal Chem.*, **4**, 347–69 (1927).
(8) Jacob, et al., Ind. Eng. Chem., Anal. Ed., **4**, 25–37 (1932).
(9) Lepper, *Z. anal. Chem.*, **98**, 161–4 (1934).
(10) Lewis and Randall, "Thermodynamics," p. 373, New Yorl McGraw-Hill Book Co., 1923.
(11) Nims, *J. Am. Chem. Soc.*, **55**, 1946 (1933).
(12) Sanfourche, *Bull. soc. chim.*, **53**, 1507–12 (1933).
(13) Waggaman and Easterwood, "Phosphoric Acid, Phosphate and Phosphatic Fertilizers," pp. 261–2, New York, Chemic Catalog Co., 1927.

Received March 30, 1937.

A Rapid Method for Protein Dialysis

F. W. BERNHART, L. EARLE ARNOW, AND A. C. BRATTON
Laboratory of Physiological Chemistry, University of Minnesota Medical School, Minneapolis, Minn.

THE usual methods for removing inorganic ions from proteins in the final stage of purification are time-consuming and troublesome. If simple dialysis is employed, the time necessary for removal of the salt is extremely long. Collodion or Cellophane membranes suspended in large volumes of dialyzing solution may break, causing loss of the sample. According to Gortner (*1*), simple dialysis does not always remove the last traces of salts from colloids.

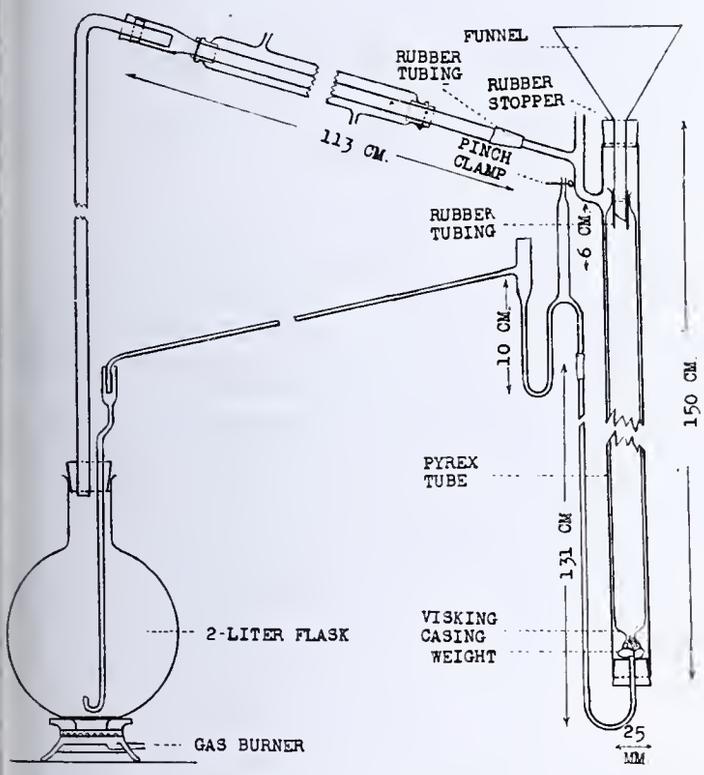

FIGURE 1. SIMPLE DIALYZER

Electrodialysis of protein solutions containing high concentrations of ammonium sulfate may result in acid denaturation due to accumulation of sulfuric acid in the protein solution. In this laboratory, use of the equipment made from materials at hand, illustrated in Figures 1 and 2, has been found to decrease the time necessary for complete removal of salts from protein solutions. The protein solution is first dialyzed until the salt concentration is low and the remaining ions are removed by electrodialysis. (The dialyzing membranes used were purchased from the Visking Corporation, 4311 Justine St., Chicago, Ill.)

Simple Dialyzer

A 2.5 (inside diameter) × 150 cm. Pyrex glass tube is fitted with a side arm as shown in Figure 1. Distilled water is obtained by distillation, using a 2-liter Pyrex flask and glass condenser for this purpose. After passing around the protein solution, the wash water returns to the still by gravity flow. After being tested for leaks, a "1-inch" (actual diameter about 2.2 cm.) Visking casing of suitable length is tied by rubber bands to a funnel stem covered with rubber tubing. The lower end of the casing is tied with a cord and fastened to a 50-gram weight, and the empty casing is lowered into the Pyrex tube. About 100 cc. of water are poured into the glass tube to prevent strain on the membrane; the casing and funnel are filled with distilled water. The apparatus is connected to the still and distillation is started for the purpose of testing the operation of the apparatus and detecting possible leaks in the dialyzing membrane. By raising the lower end of the glass tube, the water is emptied from the casing through the funnel. Protein solution is then placed inside the casing and distillation is begun. The wash solution returning to the still is tested at intervals for inorganic ions, and when only a faint test is obtained, distillation is stopped.

DISCUSSION. Because the casing need not be removed from the tube to empty its contents, mechanical injury to the membrane is obviated. The greatest hydrostatic pressure to which it is subjected is 20 cm. of water, the distance from the funnel top to the top of the casing. The casing will hold 600 cc., and the space between the filled casing and the glass tube has a volume of 50 to 100 cc. At a distillation rate of 1200 cc. per hour, the dialyzing water is changed completely every 3 to 5 minutes. The casing, if left in the Pyrex tube and filled with water to which a few drops of toluene have been added will keep in good condition for at least 2 months. In case the membrane is broken, the volume of the protein solution is increased only 50 to 100 cc.

Electrodialyzer

Platinum foil (8 × 0.1 × 130 mm.) is inserted through two two-hole stoppers, size four, glass tubing is fitted as illustrated, and the stoppers are inserted into the round wooden cover. A cooling coil is bent from 6-mm. glass tubing. A jar of convenient size may be made from a gallon bottle. Two 2.2-cm.

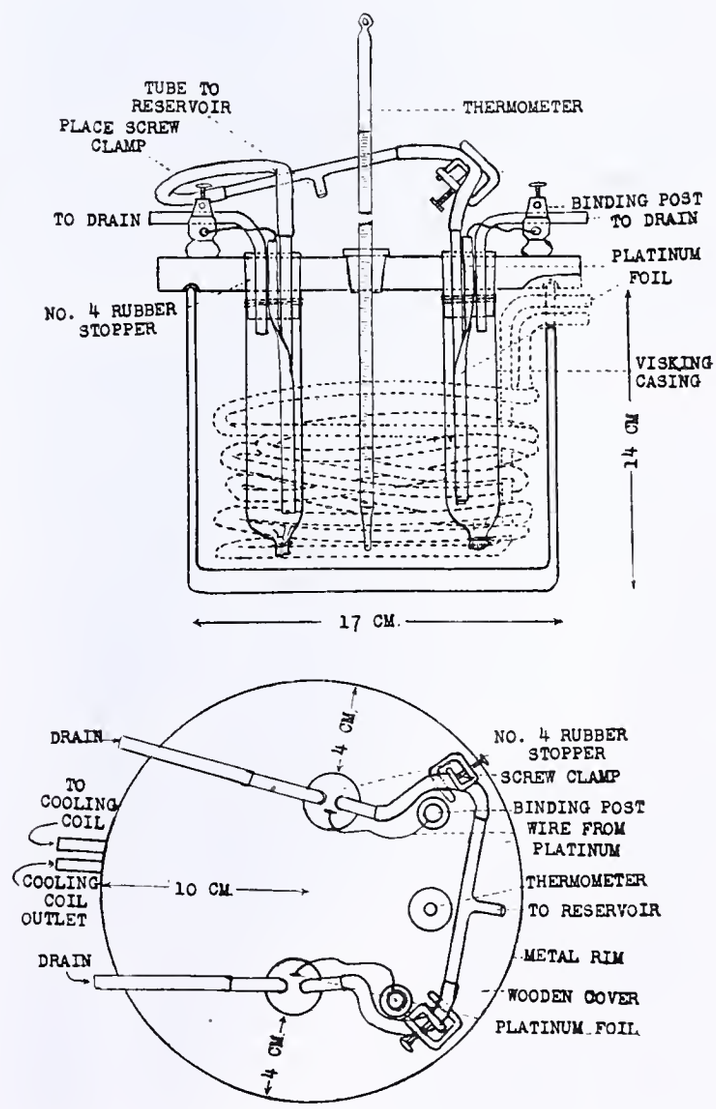

FIGURE 2. ELECTRODIALYZER

(1-inch) casings are tied separately, with cord, to each stopper to prevent leakage. The protein solution is placed in the jar and covered with toluene. A 110-volt potential drop is applied across the electrodes. Distilled water is circulated around each electrode at a rate of about 400 cc. an hour, and tap water is circulated through the cooling coil. Electrodialysis is continued until tests for ions are negative.

As an additional check for the absence of ions, an ammeter and voltmeter are placed in the circuit. Conductivity of distilled water placed in the jar at the same level as the protein solution is tested, and the value obtained is compared with the conductivity of the protein solution.

Experimental

An egg albumin solution (350 cc., containing 9 grams of ammonium sulfate and 35 grams of egg albumin) was dialyzed for 14 hours in the simple dialysis apparatus described. The test for sulfate ion at the end of this time was faint. The volume of protein solution had increased to 600 cc. This solution, after 48 hours of continuous electrodialysis, had the same conductivity as the distilled water circulated through the apparatus. The final volume of the solution was 640 cc.

Literature Cited

(1) Gortner, R. A., "Outlines of Biochemistry," p. 75, New York: John Wiley & Sons, 1929.

Received June 7, 1937.

Baumé Hydrometer Correction Table for Sodium Hydroxide Solutions

JOHN GRISWOLD,[1] University of Texas, Austin, Texas

THE table is a convenience in determining the concentration of sodium hydroxide solutions by means of the Baumé hydrometer for heavy liquids. The readily available hydrometer tables for sodium hydroxide solutions give the concentrations versus degrees Baumé at 20° C. referred to water at 4° C. (*1*, *2*). However, the common Baumé hydrometers are graduated at 60° F. relative to water at 60° F.

Table I includes this density base correction and also a correction for the thermal expansion of the glass instrument. It corrects the hydrometer indication at any temperature between 50° and 130° F. to degrees Baumé at 20° C. referred to water at 4° C. The per cent sodium hydroxide by weight may then be read from the handbook tables (*1*, *2*).

Table I. Baumé Hydrometer Correction Table for Sodium Hydroxide Solutions

Observed Temp. ° F.	Indicated Degrees Baumé[a] 1	5	10	15	20	25	30	35	40	45
	Degrees Baumé at 20°/4° C.									
50	0.6	4.5	9.5	14.5	19.4	24.4	29.4	34.4	39.4	44.4
52	0.6	4.6	9.6	14.5	19.5	24.5	29.5	34.5	39.5	44.5
54	0.6	4.6	9.6	14.6	19.5	24.5	29.5	34.5	39.5	44.5
56	0.7	4.7	9.6	14.6	19.6	24.6	29.6	34.6	39.6	44.6
58	0.7	4.7	9.7	14.7	19.6	24.6	29.6	34.6	39.6	44.6
60	0.7	4.7	9.7	14.7	19.7	24.7	29.7	34.7	39.7	44.7
62	0.8	4.8	9.8	14.8	19.7	24.7	29.7	34.7	39.7	44.7
64	0.8	4.8	9.8	14.8	19.8	24.8	29.8	34.8	39.8	44.8
66	0.9	4.9	9.9	14.9	19.9	24.9	29.9	34.9	39.9	44.9
68	0.9	4.9	9.9	14.9	19.9	24.9	29.9	34.9	39.9	44.9
70	0.9	5.0	10.0	15.0	20.0	25.0	30.0	35.0	40.0	45.0
72	1.0	5.0	10.0	15.0	20.0	25.0	30.0	35.0	40.0	45.0
74	1.0	5.1	10.1	15.1	20.1	25.1	30.1	35.1	40.1	45.1
76	1.0	5.1	10.1	15.1	20.1	25.1	30.1	35.1	40.1	45.1
78	1.1	5.2	10.2	15.2	20.2	25.2	30.2	35.2	40.2	45.2
80	1.1	5.2	10.3	15.3	20.2	25.2	30.2	35.2	40.2	45.2
82	1.2	5.3	10.3	15.3	20.3	25.3	30.3	35.3	40.3	45.3
84	1.2	5.3	10.4	15.4	20.4	25.4	30.3	35.3	40.3	45.3
86	1.2	5.4	10.4	15.4	20.4	25.4	30.4	35.4	40.4	45.4
88	1.3	5.4	10.5	15.5	20.5	25.5	30.4	35.4	40.4	45.4
90	1.3	5.5	10.5	15.5	20.5	25.5	30.5	35.5	40.5	45.5
92	1.4	5.5	10.6	15.6	20.6	25.6	30.5	35.5	40.5	45.5
94	1.4	5.6	10.7	15.7	20.7	25.6	30.6	35.6	40.6	45.6
96	1.5	5.6	10.7	15.7	20.7	25.7	30.7	35.6	40.6	45.6
98	1.5	5.7	10.8	15.8	20.8	25.8	30.7	35.7	40.7	45.7
100	1.6	5.7	10.8	15.8	20.8	25.8	30.8	35.7	40.7	45.7
102	1.6	5.8	10.9	15.9	20.9	25.9	30.8	35.8	40.8	45.8
104	1.7	5.9	11.0	16.0	21.0	26.0	30.9	35.8	40.8	45.8
106	1.7	5.9	11.0	16.0	21.0	26.0	31.0	35.9	40.9	45.9
108	1.8	6.0	11.1	16.1	21.1	26.1	31.0	36.0	41.0	45.9
110	1.9	6.0	11.2	16.2	21.2	26.1	31.1	36.0	41.0	46.0
112	1.9	6.1	11.2	16.2	21.2	26.2	31.1	36.1	41.1	46.0
114	2.0	6.2	11.3	16.3	21.3	26.2	31.2	36.1	41.1	46.1
116	2.1	6.2	11.4	16.4	21.3	26.3	31.2	36.2	41.2	46.1
118	2.1	6.3	11.4	16.4	21.4	26.4	31.3	36.3	41.2	46.2
120	2.2	6.4	11.5	16.5	21.5	26.4	31.4	36.3	41.3	46.2
122	2.3	6.4	11.6	16.6	21.5	26.5	31.4	36.4	41.3	46.3
124	2.3	6.5	11.6	16.7	21.6	26.5	31.5	36.4	41.4	46.3
126	2.4	6.6	11.7	16.7	21.7	26.6	31.5	36.5	41.4	46.4
128	2.5	6.7	11.8	16.8	21.7	26.7	31.6	36.5	41.5	46.4
130	2.5	6.7	11.9	16.9	21.8	26.7	31.7	36.6	41.5	46.5

[a] Using hydrometer correct at 60°/60° F.

The table is used in exactly the same manner as the A. P. I. hydrometer indication table for petroleum oils (*3*)—for example, if the observed degrees Baumé at 120° F. equal 20.0, the degrees Baumé at 20° C. equal 21.5. Intermediate values may be readily interpolated.

As an illustration of the calculation used in constructing the table, take, for example, 32 per cent sodium hydroxide solution: $d_4^{20} = 1.3490$, and $d_4^{104} = 1.3362$ (*4*).

The hydrometer is graduated to read degrees Baumé at 60° F. relative to water at 60° F. (15.56° C.).

The density at 104° F. relative to water at 4° C. is converted to the density relative to water at 15.56° C. by dividing by a correction factor which is the relative density of water at 15.56° C. to water at 4° C.

$$d_{15.56}^{104} = (1.3362/0.99904) = 1.3375$$

The average coefficient of cubical expansion of glass used for volumetric instruments is 25×10^{-6} per ° C. or $(25/1.8) \times 10^{-6}$ per ° F.

The volume of the hydrometer at 104° F. relative to its volume at 60° F. is

$$1 + (25/1.8)\,(10^{-6})\,(104 - 60) = 1.000611$$

The "apparent" or indicated density of the solution at 104° F. is then (1.3375) (1.000611) = 1.3384, or 36.66 Baumé according to the conversion formula.

The density in degrees Baumé of the 32 per cent solution at 20° C. referred to water at 4° C. taken from the handbook is 37.5. Referring to the table, it is found that a hydrometer indication of 35.0° at 104° F. is 35.8° corrected. Adding the 1.7° which were dropped in order to use the closest column of the table, 36.7° Baumé indicated at 104° F. are 37.5 Baumé at 20° C., referred to water at 4° C.

Literature Cited

(1) Hodgman, C. D., "Handbook of Chemistry and Physics," 21st ed., p. 1120, Cleveland, Ohio, Chemical Rubber Publishing Co., 1936.
(2) Lange, N. A., "Handbook of Chemistry," p. 870, Sandusky, Ohio: Handbook Publishers, Inc., 1934.
(3) Nat. Bur. Standards, *Circ.* C-410, 6 (1936).
(4) Perry, J. H., "Chemical Engineers' Handbook," 1st ed., p. 370, New York, McGraw-Hill Book Co., 1934.

Received June 7, 1937.

[1] Present address, Box 266, Winnetka, Ill.

The Rare Earth Metals and Their Compounds

Thermal Analysis of Rare Earth Nitrate Mixtures

LAURENCE L. QUILL, RICHARD F. ROBEY, AND SAM SEIFTER
The Ohio State University, Columbus, Ohio

A method of analysis is proposed which utilizes the characteristic melting points of the hydrated salts and the liquidus curves of the binary salt mixtures for the estimation of the composition of rare earth mixtures. Several binary salt systems were investigated, employing very pure simple and double rare earth nitrates to provide basic information concerning the possibilities of the method.

'T WAS pointed out by Jantsch (*3*) and by Friend (*2*) that . the double magnesium nitrates and the simple nitrates the cerium group rare earth elements exhibit relatively w congruent melting points. The double nitrates corre- ond in composition to the formula $Ce_2Mg_3(NO_3)_{12}\cdot 24H_2O$, here the symbol Ce represents any one of the cerium group ements. Conclusive thermal analytical evidence for the istence of the double salts has been presented recently by uill and Robey (*4*).

The simple nitrates crystallize in the form of the hexahy- ate, $Ce(NO_3)_3\cdot 6H_2O$, from water solution.

The quantitative analysis of most rare earth mixtures is a fficult matter, the most important methods in use today ing the determination of the average equivalent weight, antitative spectrographic analysis, and magnetic susceptility measurements. All of these are very tedious, expenve, and yet not highly accurate.

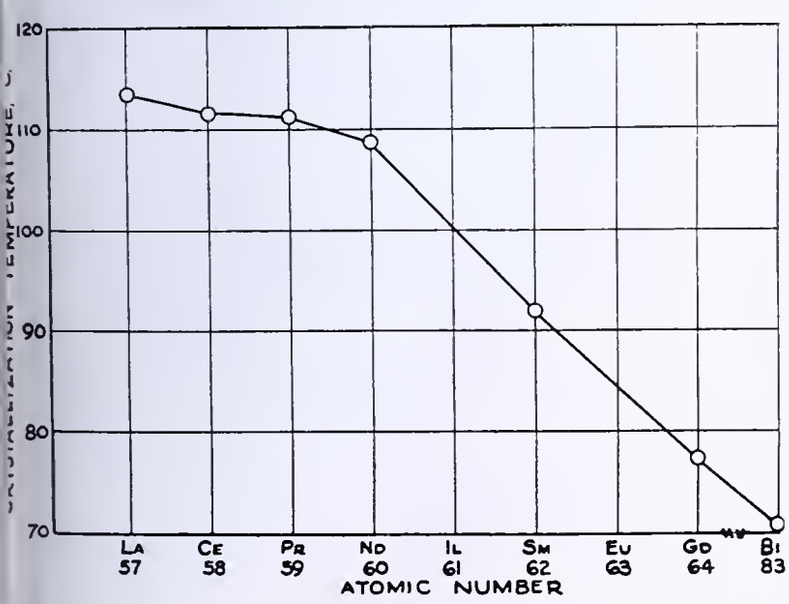

Figure 1. Variation of Crystallization Temperatures (Melting Points) of Cerium Group Magnesium Double Nitrates with Atomic Number

Since the melting points are so characteristic for the varius rare earth simple and double nitrates, it seems likely that e determination of the melting temperatures of rare earth itrate mixtures might be a means to the quantitative esmation of the composition of the mixtures. This is possible because (1) a true solid solution results upon the mixing of corresponding rare earth salts and (2) knowledge of the behavior of solid solutions in general permits the conclusion that the melting temperatures of these mixtures are related in a simple fashion to their compositions.

The determination of the position of the liquidus curve of a binary rare earth salt system would yield the melting temperatures of all possible binary mixtures. Conversely, if the melting temperature of a mixture were determined, reference to the liquidus curve would yield the composition of the mixture. A thermal analytical method employing simple apparatus might be used in a very direct fashion to analyze rare earth mixtures and to follow the progress of separation of the rare earth elements in a fractional crystallization series.

Table I. Crystallization Temperatures of the Rare Earth and Bismuth Magnesium Double Nitrates

Atomic Number	Element	Temperature: Jantsch (*3*) °C.	Temperature: This investigation °C. (*4*)
57	La	113.5	113.5
58	Ce	111.5	112.0
59	Pr	111.2	...
60	Nd	109.0	108.8
62	Sm	96.2	92.0
64	Gd	77.5	...
83	Bi	...	70.8

In a method of analysis which is dependent upon an interpolation of a liquidus curve, the precision of the method will be a function of the difference between the crystallizing temperatures of the pure component salts. Accordingly, the melting points of the pure double magnesium nitrates of the cerium group elements as determined by Jantsch (*3*) and by the authors' investigations are given in Table I. The values have been plotted in Figure 1 against the respective atomic numbers.

Experimental

Materials. The samarium and neodymium materials employed in this investigation were prepared from the pure oxides kindly lent by B Smith Hopkins of the Department of Chemistry, University of Illinois. The lanthanum nitrate was prepared as described in a previous paper (*4*). The arc emission spectra of these materials showed them to be free from foreign rare earth elements.

The cerium material was derived from the G. F. Smith Chemical Company's pure analytical ceric sulfate reagent. The cerium was purified by three successive precipitations by the well-known basic bromate method (a process described in all textbooks on the rare earth elements).

Ultimately the cerium was precipitated as the oxalate, the oxalate digested with concentrated nitric acid on the steam bath, the solution evaporated to a sirup and taken up in water containing a little hydrogen peroxide. The absorption and the arc emission spectra showed that no rare earth elements other than cerium composed the resulting material.

Baker's magnesium oxide of best purity with an unusually low calcium content was used in the preparation of the double magnesium salts. The magnesium and rare earth materials were dissolved in Grasselli's "chemically pure" nitric acid in the ratio of three to two gram-atomic weights, respectively, and the double nitrate was made to crystallize from the solution. A chemically pure grade of Baker's bismuth nitrate pentahydrate was employed for the preparation of the bismuth double salt.

The rare earth simple nitrates were crystallized from the nitric acid solution of the oxide, except cerium, in which case the oxalate dissolved. The resulting nitrate crystals were dissolved in water and recrystallized from water solution two or three times. All of the prepared salts were dried over 55 per cent sulfuric acid solution in a desiccator before use.

Procedure. Simple apparatus suffices for the thermal analysis of the low melting salts and their mixtures. The experimental method was that used by other investigators (*1*) with low melting salts. Briefly, it consisted of heating the prepared mixtures in Pyrex glass test tubes inserted in a well-stirred oil bath to a temperature somewhat above their melting temperatures. The constantly stirred mixtures were then permitted to cool, the rate of cooling being determined by means of a thermometer. The thermometer was comparatively calibrated with a Bureau of Standards certified instrument. The temperature difference between the mixtures and bath was always kept as small as possible.

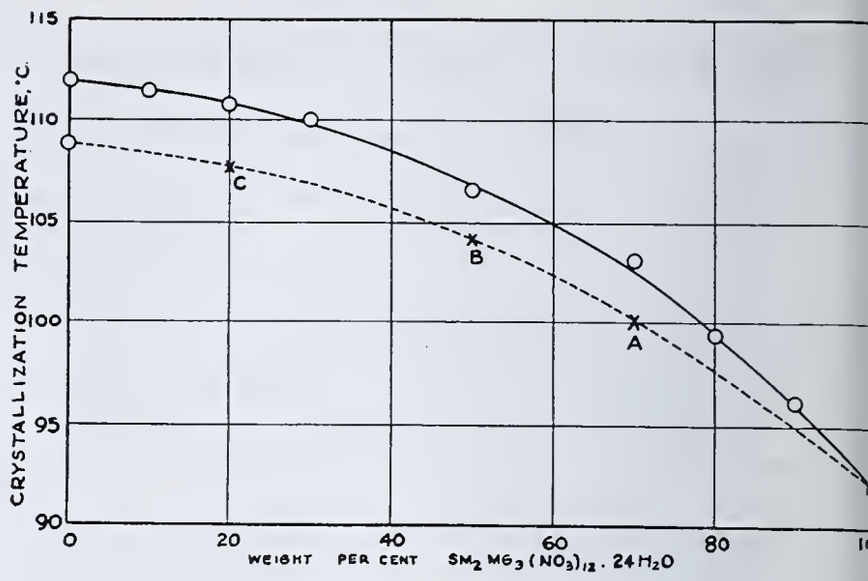

Figure 3. Liquidus Curves

Solid line, cerous and samarium magnesium double nitrates. Broken line, neodymium an samarium magnesium double nitrates

Binary System

Samarium and Bismuth Magnesium Double Nitrates. Bismuth magnesium double nitrate is isomorphous in the crystalline state with the cerium group rare earth magnesium double nitrates. The double magnesium nitrates are salts which are employed largely in the separations of the cerium group elements by means of systematic fractional crystallization.

Urbain's modification of the usual methods of fractional crystallization consists in adding to the series a bismuth salt corresponding to the salt in crystallization. Since the salt possesses an intermediate solubility, it greatly aids the separation of the binary mixtures of samarium and europium which otherwise separate only slowly. Bismuth thus acts as a separating element. It is also a good separating element because it can be easily removed after use.

In adding bismuth magnesium nitrate to a series containing samarium magnesium double nitrate it is evident that certain fractions after repeated fractional crystallization will become binary solid solutions of the bismuth salt in samarium magnesium double nitrate. The results of the thermal analysis of a series of these binary mixtures of known composition are given in Table II, which has been derived from time–differential temperature cooling curves of the various mixtur and are plotted in Figure 2.

Table II. Crystallization Temperatures of Binary Systems

Bismuth and Samarium Magnesium Double Nitrates		Cerous and Samarium Magnesiu Double Nitrates	
Samarium double salt	Temperature	Samarium double salt	Temperatur
Weight per cent	° *C.*	*Weight per cent*	° *C.*
100.0	92.0	100.0	92.0
76.8	90.9	90.0	96.1
60.0	87.0	80.0	99.5
50.0	85.0	70.0	103.2
40.0	83.0	50.0	106.2
30.0	80.0	30.0	110.0
20.0	77.7	20.0	110.8
10.0	74.5	10.0	111.5
0.0	70.8	0.0	112.0

Slight losses of water were noted, especially among t higher melting mixtures on repeated determination. T crystallization temperature was identified by the "halt" poi in the cooling curve produced by the formation of a crystalli precipitate, probably the anhydrous double salt. The mi tures remain fluid during this period. Final solidificati does not occur until a much lower temperature is reach at which time only a negligible halt point is observed.

Samarium and Cerium Magnesium Doub Nitrates. A study of the binary syste cerium and samarium magnesium double n trates would provide further information co cerning the form of the liquidus curve. Nat rally the data would be of little direct val since mixtures of cerium and samarium a seldom encountered.

The results of the thermal analysis of t binary mixtures are given in Table II a plotted with the solid line curve in Figure 3

A comparison of Figures 2 and 3 shows th the liquidus curves in both cases have prac cally the same form. It was found that bo curves can be expressed approximately by t same mathematical equation. The compo tion of a mixture is related to the crystalli ing temperature of the mixture by the equ tion

$$P = 50\,[(f^2 - 4F)^{1/2} - f]$$

where P is the weight per cent composition the mixture

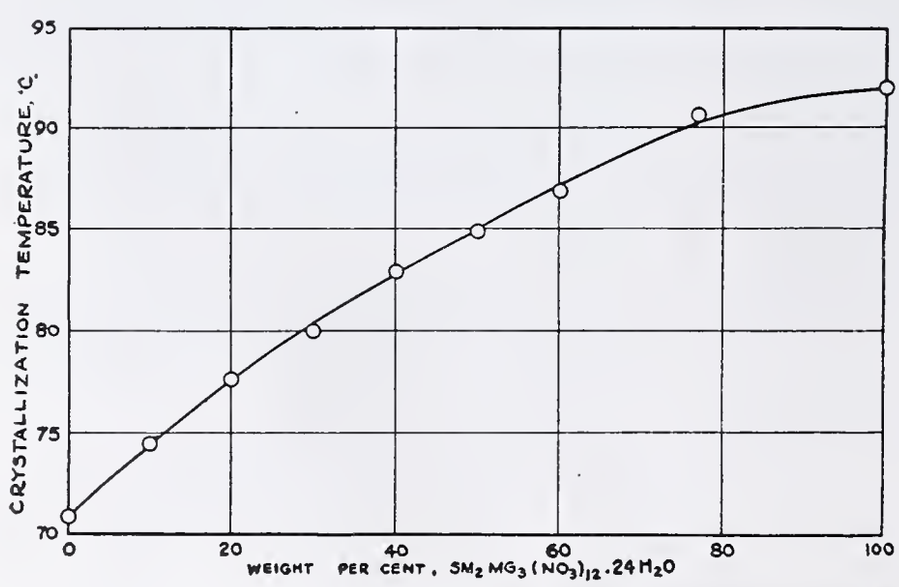

Figure 2. Liquidus Curve of System Bismuth and Samarium Magnesium Double Nitrates

$$f = \left[\frac{d^3 - 32d^2 - 63d - 16}{16}\right]$$

$$F = D^2 + \left[\frac{63 + 16d - d^2}{16}\right] D$$

d = the difference in degrees between the crystallizing temperatures of the two pure components, and

D = the difference in degrees between the crystallizing temperature of the mixture and that of the lower melting component

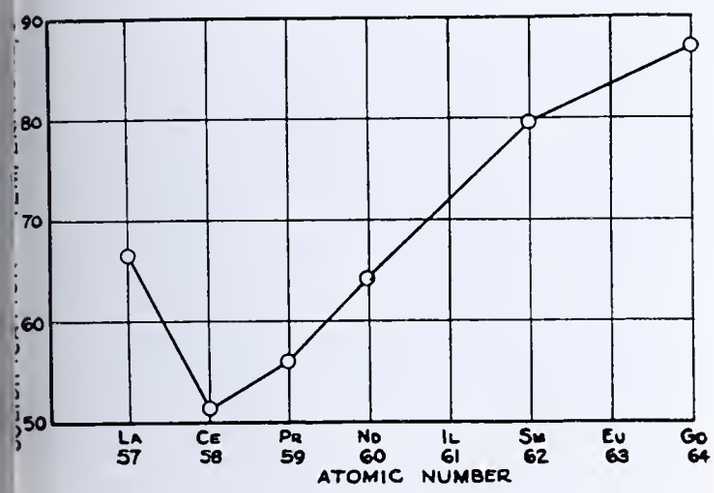

IGURE 4. VARIATION OF SOLIDIFICATION TEMPERATURES MELTING POINTS) OF HEXAHYDRATED CERIUM GROUP NITRATES WITH ATOMIC NUMBER

It is not unreasonable to assume that this empirical equa-on would be valid also for the liquidus curves of the other osely related rare earth double nitrate systems which pos-ss a similar value of d; and that curves derived from this npirical equation might be used for the analysis of binary ixtures.

To test the validity of this method of analysis the compo-tion of an "unknown" mixture was determined as follows:

1. The derived liquidus curve of the binary system neo-ymium and samarium magnesium double nitrates was lotted according to the above equation. It is given as the roken line curve in Figure 3.

2. A sample of crystals was removed from an interme-iate portion of a fractionation series containing the mixed ouble magnesium nitrates of neodymium and samarium. he crystallization temperature of the sample was deter-ined and found to be 100.0°. If the curve is the correct one, e composition of the mixture is represented by point A on e theoretical curve and the fraction is composed of approxi-ately 30 per cent neodymium and 70 per cent samarium.

3. The composition of the sample was then anged successively by adding known weights f pure neodymium magnesium nitrate, the ystallization points redetermined and com-ared with the values predicted from the rve. The results are given in Table III.

From this it is possible to conclude that e predicted curve falls very near to the true quidus of the system.

HEXAHYDRATED CEROUS AND LANTHANUM ITRATES AND HEXAHYDRATED CEROUS AND EODYMIUM NITRATES. The simple nitrates lso are amenable to study in binary systems ith the view to employing the data for analyz-g mixtures. The easily separable element, erium, has been chosen as one constituent for e mixtures.

The melting points of the pure simple hexa-ydrated nitrates as determined recently by Friend (*2*) and by the authors are given in Table IV. These values have been plotted against the respective atomic numbers in Figure 4.

The value of the solidification temperature of the gado-linium nitrate should be taken only as indicative of trend, since the perfectly white salt was labeled 98 per cent pure as purchased from the A. D. Mackay Company.

In observing the cooling curves of the molten hexahydrated nitrates, a slight halt is noted when a slight cloudiness makes its appearance. It is probably due to a lower hydrate. The major halt point, unlike the double magnesium nitrates, is found at the point of apparently complete solidification.

The solidification temperatures for the binary systems hexahydrated lanthanum and cerous nitrates and hexahy-drated neodymium and cerous nitrates are given in Table V. The liquidus curves have been plotted in Figure 5. Both liquidus curves are very roughly linear between the points

TABLE III. CRYSTALLIZATION TEMPERATURES

Point	Composition	Crystallization Temperature Predicted	Crystallization Temperature Observed
		° C.	° C.
A	30 per cent Sm salt	...	100.0
	Changed to		
B	50.0 per cent Sm salt	104.2	104.0
	Changed to		
C	20.0 per cent Sm salt	107.4	107.2

TABLE IV. SOLIDIFICATION TEMPERATURES OF THE CERIUM GROUP SIMPLE HEXAHYDRATED NITRATES

Atomic Number	Element	Temperature Friend (*2*)	Temperature This investigation
		° C.	° C.
57	La	65.4	66.5
58	Ce	...	51.4
59	Pr	56.0	...
60	Nd	67.5	64.1
62	Sm	...	79.5
64	Gd (98%)	...	87.0

TABLE V. SOLIDIFICATION TEMPERATURES OF BINARY SYSTEMS

Hexahydrated Lanthanum and Cerous Nitrates		Hexahydrated Neodymium and Cerous Nitrates	
Hexahydrated lanthanum nitrate	Temperature	Hexahydrated neodymium nitrate	Temperature
Weight per cent	° C.	*Weight per cent*	° C.
100.0	66.5	100.0	64.1
90.0	63.5	90.0	62.8
80.0	63.0	80.0	62.0
70.0	61.9	70.0	60.0
60.0	60.0	60.0	58.0
50.0	58.4	50.0	56.0
40.0	57.5	40.0	53.8
30.0	56.4	30.0	53.5
20.0	55.0	20.0	53.0
10.0	53.7	10.0	51.8
0.0	51.4	0.0	51.4

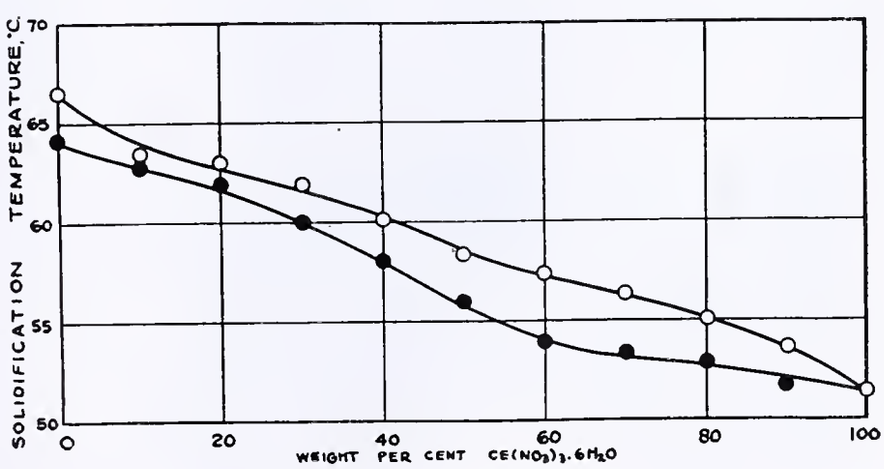

FIGURE 5. LIQUIDUS CURVES

○, hexahydrated lanthanum and cerous nitrates. ●, hexahydrated neodymium and cerous nitrates

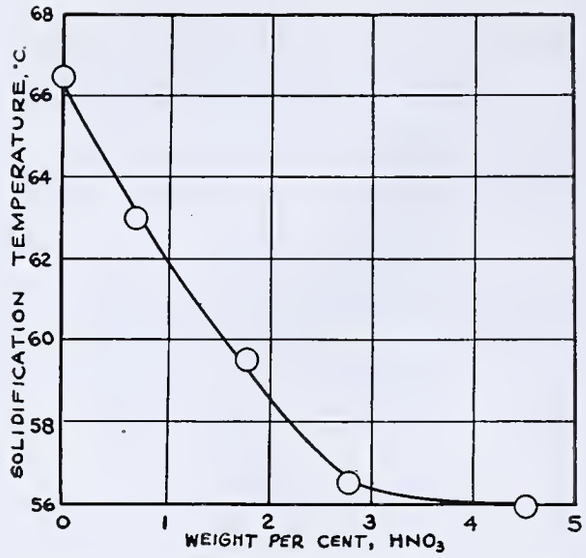

FIGURE 6. EFFECT OF NITRIC ACID ON SOLIDIFICATION TEMPERATURE OF HEXAHYDRATED LANTHANUM NITRATE

representing the pure components. The irregular features of the curves are probably due to the effect of the formation of ceric cerium by autoxidation of the cerous nitrate at the elevated temperature. The colorless cerous salt and colorless mixtures containing the salt retained a slightly yellowish cast after heating. Titration of the ceric cerium thus formed by standard ferrous solution, using orthophenanthroline ferrous complex indicator in dilute sulfuric acid solution, showed that the ceric concentration never exceeded 1 per cent.

The necessity of obtaining the crystallized hexahydrated nitrates free from small amounts of residual impurities, such as nitric acid, is emphasized by the data plotted in Figure 6. Less than 1 per cent of the acid lowers the solidification point several degrees.

An inspection of Figures 2 and 4 reveals that the followin frequently associated pairs of simple nitrates and doub magnesium nitrates possess crystallization temperature sufficiently far apart to be useful in analysis through the binary liquidus curves: mixtures of the hexahydrated n trates of (*a*) lanthanum and cerium, (*b*) lanthanum an praseodymium, (*c*) praseodymium and neodymium, (*d*) ceriu and neodymium, and (*e*) neodymium and samarium, an mixtures of the double magnesium nitrates of (*a*) samariu and neodymium, (*b*) samarium and bismuth, and (*c*) sam rium and gadolinium.

Summary and Conclusions

The liquidus curves of certain binary systems of the simp and double magnesium nitrates of the cerium group of ra earth elements were investigated. All form a continuo series of solid solutions with corresponding rare earth an bismuth salts.

A method is proposed whereby quantitative estimatic of the composition of rare earth nitrate mixtures can be a complished by obtaining the freezing temperature of tl nitrate mixture and the composition of the mixture dete mined by reference to the liquidus curve.

Further investigations of rare earth salts in binary, ternar and even quaternary systems are obviously necessary in ord to realize the full value of the method.

Literature Cited

(1) Ewing, W. W., Brandner, J. D., Slichter, C. B., and Griesinge W. K., *J. Am. Chem. Soc.*, **55**, 4822 (1933).
(2) Friend, J. N., *J. Chem. Soc.*, **1935**, 824, 1430.
(3) Jantsch, G., *Z. anorg. Chem.*, **76**, 303 (1912).
(4) Quill, L. L., and Robey, R. F., *J. Am. Chem. Soc.*, **59**, 10 (1937).

RECEIVED June 4, 1937.

The Evaluation of Rubber and Rubberlike Compositions as Vibration Absorbers

Apparatus for Automatic Recording

FELIX L. YERZLEY, Organic Chemicals Department, E. I. du Pont de Nemours & Co., Inc., Wilmington, Del.

THE increased amount of information required for structural applications of rubber and neoprene reveals unmistakably the inability of available test equipment to provide the information most needed by design engineers. On the basis of present tests it is extremely difficult for an engineer to select the material best suited to a given use. He may write his specifications for rubberlike materials much as he would write specifications for steel, and often fails to recognize that the essential differences between the mechanical characteristics of rubber, rubberlike materials, and steel require different methods of evaluation. Rubber goods manufacturers, on the other hand, may not always appreciate the problems of mechanical engineers. The attainment of a common basis of test is important, therefore, and the test equipment described in this paper is offered as a step in that direction. The present paper is limited to factors involved in the evaluation of rubber and rubberlike compositions as vibration absorbers.

It is necessary at the outset to have a clear understanding of the field of application for rubber mountings. Metall springs have been used for mountings for many years ar satisfactorily meet many needs. They possess resilience to remarkable extent, which under certain conditions is high desirable, but where oscillation must be absorbed they usual require a shock absorber of one of the conventional types a auxiliary apparatus. The peculiar virtue of rubber or rubberlike composition as a mounting material is that it h within itself the ability to damp out vibration. This dampir implies the conversion of mechanical energy into heat.

We shall assume that the characteristics of a vibrating m chine are thoroughly known and that this machine is to b mounted on a framework in such a way that excessive shoc will not be transmitted to the frame, and oscillations of hig amplitude will be prevented. To meet the first condition it necessary to provide a composition of the proper modulu which will extend the time element in shock sufficiently reduce considerably the force transmitted.

To meet the second condition it is necessary to consider tl

itical speeds of the complete assembly. We will assume at by selecting material with a sufficiently low modulus the itical speeds will be kept low. This simplifies the problem y reducing the required energy absorption to oscillations at w frequencies, a condition naturally favorable to the durality of the vibration-damping composition. At critical equencies every impulse serves to increase the amplitude of cillation of the machine; hence, it is at critical frequencies at the vibration damper must absorb the maximum amount energy.

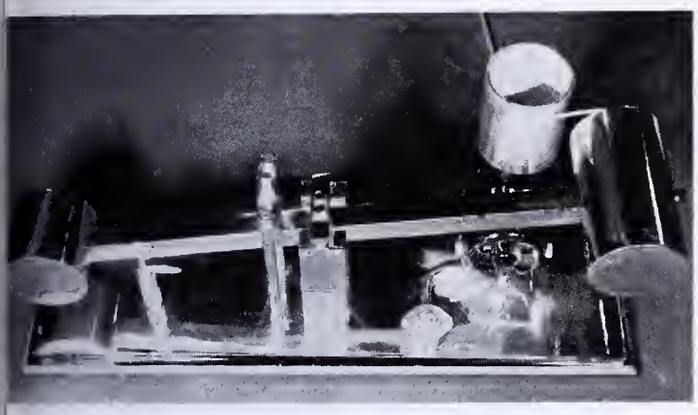

Figure 1

No composition for mechanical mountings will be satisctory unless throughout its life it maintains its original astic characteristics and form to a reasonable degree. For ample, it is desirable that the characteristics of a vibration mper remain reasonably fixed over a wide range of temratures. However, the art of compounding does not yet pear to have reached the goal where no changes in modulus d damping characteristics occur with changes in temperare. Since complete elimination of temperature dependence not possible, a suitable tolerance must be allowed in the iginal plans.

Tolerance must also be allowed for change in form. Obously a thermoplastic material is not suitable; yet all rubber d rubberlike materials will show a certain amount of peranent deformation under the influence of the dead load. hus, some slight drift must be expected and in almost all stances can be allowed for in design.

Other factors affecting permanence are principally resistce to oxidation, fatigue, excessive heat build-up, and terioration in oils or active chemicals. In considering meanical fatigue it is obvious that a stock cannot be used bend a certain allowable stress. This limits not only the iginal applied load but also involves the extent of motion in bration. The intensity of the load is related to the question permanent set, structural disintegration upon repeated rking, and extent of heat build-up. The temperature rise ring the use of a vibration damper must not be excessive. e limitations of temperature rise are dictated by the resistce of the stock to progressive cure and to deterioration en exposed to air, ozone, and solvents. Oil resistance can eliminated as a factor by special features of design, which ield the stock from contact with lubricants, but the necesy of shielding from the lubricants may so restrict the design to limit its suitability. For that reason, there are many stances requiring a stock which is itself inherently oilsistant.

Mechanical tests must reveal several characteristics. It is cessary to know the static stress-compression characteris-s of a proposed vibration absorber. This characteristic termines the allowable load per unit area and is a primary ctor in the appearance of drift under a dead load over long riods of time. The test should also reveal the dynamic modulus of the stock as a quality definitely distinguished from static modulus. It is true that the static and dynamic moduli will be very nearly the same if the stock is highly resilient, but high hysteresis causes a difference to appear between the two. Since the dynamic modulus should be considered in properly relating the design of a motor mounting to the frequency characteristics of the motor, the necessity of properly evaluating it should not be overlooked.

The rate of absorption of energy is important. This is the damping feature of the mounting, and since it is a significant factor in choosing rubber, for example, in preference to steel springs, a ready means for its evaluation is extremely important.

Another factor very important in design is the knowledge of the deflections which will result from the application of a given shock load. Although it is possible to calculate the permissible dead load from the static characteristics and to limit the drift by keeping this below certain limits, the question of allowable deformation must be dealt with as a dynamic consideration. Here again hysteresis characteristics and static modulus determine the dynamic hardness. The term "dynamic hardness" is used in this paper to represent the dynamic relationship between impact load and deflection. Thus, a stock with high hysteresis and a given static modulus shows a greater dynamic hardness than a stock with the same static modulus and low hysteresis.

The rapid measure of drift occurring in the first minute of loading may be an indication of the drift to be expected over a more extended period of time, but this does not necessarily follow. However, drift over one period of time is of interest and such data can at times be an indication of trends which are undesirable. It is necessary to distinguish clearly between the sluggish action which characterizes a high hysteresis stock and the definite plastic flow which is characteristic of undercured rubber or rubberlike materials and thermoplastic materials.

Apparatus

The apparatus which is described in this paper combines measurements hitherto not accessible from simple apparatus, and is a means of evaluating rubber and rubberlike compositions both statically and dynamically. Figures 1 and 2 illustrate the construction.

The machine consists of an unbalanced lever with a 20-pound weight on one end and a 10-pound weight on the other, pivoted on a knife edge at the midpoint of its length. The test piece is a small rubber cylinder 0.75 inch in diameter and 0.5 inch high. During the test this is compressed between a stationary horizontal surface and the upper surface of the unbalanced lever in such a position that the compression of the test specimen resists the tendency of the 20-pound weight to fall. Thus, if the heavy end of the lever is lifted and then released, the test specimen is subjected to a shock load and is distorted beyond the static equilibrium position. In this way an oscillating system is established

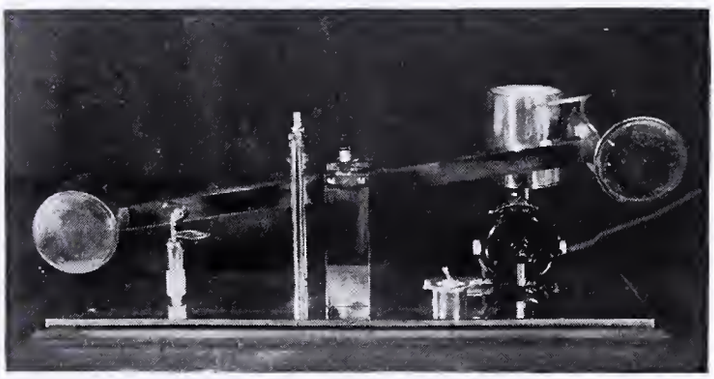

Figure 2

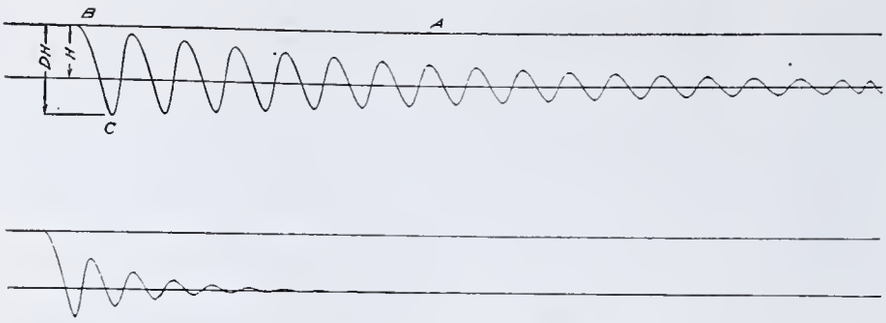

FIGURE 3. ACTUAL TEST RESULTS

and the 20-pound weight rises and falls while the test specimen goes through various degrees of compression. Each oscillation is smaller than the previous one, owing to the internal friction or mechanical hysteresis of the test piece, and eventually the lever comes to rest. A hook shown in the left foreground of Figures 1 and 2 secures the weight initially in a definite position and is adjustable in height. By releasing the hook, the weight falls from a predetermined height, and the energy input is determined by multiplying the height through which the 20-pound weight falls by the number of pounds of unbalanced weight.

A pen mounted on the heavy end of the lever traces a record on a revolving drum which is driven by a synchronous motor. Thus, the amplitude and frequency of the oscillations can be permanently preserved for analysis.

Figure 3 (upper) is an actual test result obtained from a fairly resilient composition. Line A is the zero reference made by lowering the pen to the surface of the drum and allowing the drum to rotate through one revolution with the pen in a stationary position. On the second revolution the heavy end of the lever is released at point B. Point C represents maximum compression of the pellet, and the distance from C to the line A is a measure of dynamic hardness. The line BC is a graphic indication of the response of the test specimen to an impact load. Subsequent oscillations indicate the rate at which the impact is absorbed. If successive amplitudes rapidly diminish, the composition is one which will not readily support vibration at critical frequenci The rapidity with which the oscillation rec crosses the time axis is an indication of f quency and is related to the value of t dynamic modulus under the given test con tions.

Figure 3 (lower) is an actual test result c tained from a composition with much lov resilience.

If a stock has a tendency to drift unde dead load, this can readily be detected by lowing the drum to rotate through two or th revolutions when the lever is resting in its sta equilibrium position. Qualitative information of this s may often be useful.

TABLE I. COMPOUNDS TESTED

	No. 1	No. 2	No. 3
Smoked sheets	100.	100.	100.
Zinc oxide	5.	5.	5.
Channel black	40.	40.	...
Soft carbon black[a]	...	20.	...
Stearic acid	1.5	1.5	1.5
Pine tar	6.	6.	...
"D" Phenyl-β-naphthylamine	1.	1.	1.
Zenite B[b]	0.8	0.8	0.8
Sulfur	3.	3.	3.
	No. 4	**No. 5**	**No. 6**
Neoprene type E	100.	100.	100.
Extra light calcined magnesia	10.	10.	10.
Channel black	...	25.	50.
FF rosin	5.	5.	5.
"D" Phenyl-β-naphthylamine	2.	2.	2.
Sulfur	1.	1.	1.
Zinc oxide	5.	5.	5.

Press cure:
Compounds 1 and 2, 40 minutes at 40 pounds' steam pressure (141.5° C.)
Compound 3, 25 minutes at 40 pounds' steam pressure (141.5° C.)
Compounds 4 to 6, 40 minutes at 60 pounds' steam pressure (153° C.)

[a] P. 33 was used.
[b] 90 per cent zinc salt of mercaptobenzothiazole–10 per cent diorthotolylguanidine.

TABLE II. RESULTS OF TESTS

Compound	Dynamic Hardness	Static Hardness	Amplitude of Sixth Rebound	Resilience, %	Shore Durometer Hardness
3	138	87	49	56	38
4	128	86	11	13	41
1	119	84	2	2	52
2	108	77	2	2	57
5	98	69	3	5	56
6	71	53	1	2	74

Applicability

To illustrate the applicability of the test to the evaluatio of a variety of compounds, static and dynamic character tics of six rubber and neoprene compositions (Table I) a given. Shore durometer hardness is also given to provide rough basis of comparison with present test methods (Tal II).

Dynamic hardness, static hardness, and the amplitude the sixth rebound are given in arbitrary units of hundredt of an inch as measured on the autographic record. The ra of the amplitude of the sixth rebound to the original elevati of the 20-pound weight is arbitrarily taken as the figure the resilience of the stock.

There is no reliable correlation between shore durome hardness and dynamic hardness as evaluated by this te The durometer makes a surface test, whereas the apparat described herein makes a volume test, which is obviously closer agreement with the loading to which a motor mounti is subjected.

Compounds 3 and 4 have approximately the same sta hardness. Compound 4, however, shows noticeably grea hysteresis since the resilience is lower. This factor contr utes to the lower measured dynamic hardness of 128 as co pared with 138 for compound 3. Compounds 1 and 2 a rubber stocks having high hysteresis and are presented show the differences in hardness revealed by this test bc dynamically and statically. Compounds 5 and 6 are neopre stocks.

The machine can be designed for use either in an oven a refrigerator by mounting the recording mechanism outsi of the box and by providing a remote control of the weigl release mechanism. By such an arrangement tests of a giv test piece can be made over a wide range of temperatur If a stock is reasonably oil-resistant, its characteristics befc and after an immersion test can be compared. The machi can also be used as a valuable auxiliary to one of the existi fatigue machines, to evaluate a test piece periodically throug out the duration of a life test.

Summary

The equipment is simple and foolproof. It provides autographic record in a few seconds, from which can be eva ated dynamic hardness, dynamic modulus, internal frictic static hardness, and drift.

It can be used to test rubber and rubberlike compositic over a very wide range of temperatures—for example, fr −40° to 150° C.—for testing compositions which have be exposed to solvents or gases, and in conjunction with a fatig machine for evaluation at various stages in a life flexing te

RECEIVED April 17, 1937. Presented before the Division of Rubber Che istry at the 93rd Meeting of the American Chemical Society, Chapel H N. C., April 12 to 15, 1937.

Differentiation of Oils by Enzymic Hydrolysis

Agar Plate Method and Its Application to the Detection of Adulteration of Butterfat (Ghee)

K. VENKATA GIRI AND P. N. BHARGAVA, Department of Biochemistry, Indian Institute of Science, Bangalore, India

THE use of enzymes as reagents is now being increasingly adopted in analytical practice. Because they are more elective in their action, enzymes are replacing other chemical methods for the determination and detection of complex ubstances of biological importance. It is possible to use ertain enzymes as reagents for the differentiation of complex substances like starches, fats, and proteins, and in such ases their use promises to be of considerable value. The nost striking examples of such usefulness are to be found vith amylase and lipase. In previous communications *1, 3, 4*) from this laboratory the use of amylase for the differentiation of starches and cereal flours and their detection n mixtures have been indicated.

In the present investigation the copper-soap test described by Carnot and Mauban (*2*) for the detection of lipases has been modified and extended to the differentiation of ats and oils. The method to be described takes advantage f the difference in the fatty acids of oils hydrolyzed by ipase, which form soaps with copper sulfate. The copper oaps obtained from the fatty acids of butterfat are sharply istinguished from those obtained from other oils, in that hey produce different colors when treated with iodine solution. A method for the detection of other oils in butterfat based on this fact is also described in the present paper.

Reagents and Apparatus

A saturated solution of copper sulfate, a 0.01 *N* solution of odine in potassium iodide, and 3 per cent agar media, containing 0.2 gram of soluble starch in 100 cc. A known amount of gar and soluble starch were weighed, added to water, and sterized in an autoclave for about 15 minutes. The melted agar as then made up to the required strength.

Acetic acid–acetate buffer, 0.2 *M* (pH 6.0).

Pancreas extract. Pig's pancreas was treated with acetone nd ether and 10 grams of the dry powder were extracted with 0 cc. of 85 per cent glycerol for about 2 to 3 hours at laboratory emperature and centrifuged. One cubic centimeter of the lycerol extract was diluted to 3 cc. with water.

Petri dishes, 7.5 cm. (3 inches) in diameter.

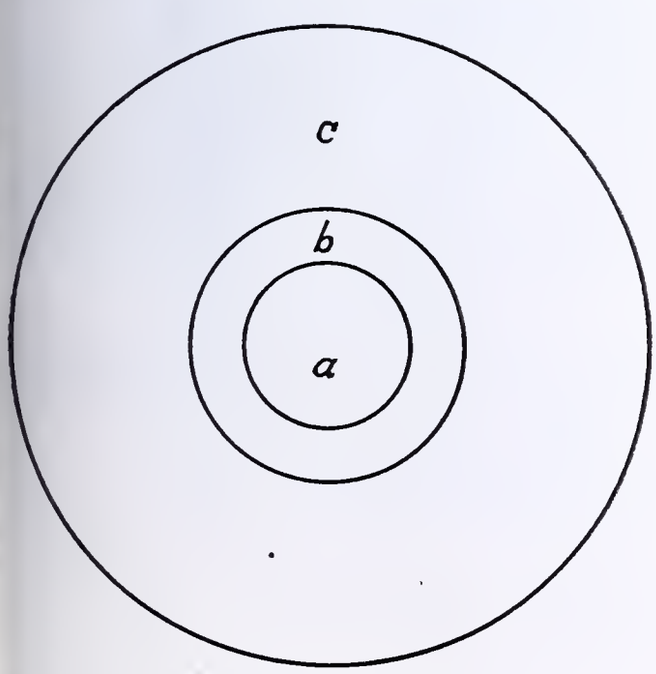

Experimental Procedure

PREPARATION OF SAMPLES. In India clarified butter is known as ghee. Pure ghee is made exclusively from butter, from which the water has been evaporated by heat and which contains no admixture of any substance not derived from the milk of the cow, buffalo, goat, or sheep. The samples of pure ghee employed in the present study were kindly supplied by the Imperial Dairy Expert, from a herd at the Imperial Dairy Institute, Bangalore. Other samples of pure ghee from the milk of buffalo, cow, and goat were prepared in the laboratory by collecting the thick layer of "skin" which formed when boiled milk was left at a moderately warm temperature and by churning in a household butter churn. The buttermilk or whey was separated from the fat, which was gently heated, strained, and stored.

TABLE I. TESTS OF PURE OILS

Group	Oil or Fat	Color of Central Zone
1	Pure ghee (cow, buffalo, goat)	Dirty yellow with faint green tint
2	Coconut oil	Green
3	Sesame, groundnut, mahua, safflower, lard, castor	Bluish green

The oils were prepared in the laboratory by crushing the seed and subjecting it to hydraulic pressure in the cold. The expressed oils were neutralized with alkali and clarified by washing, heating, and finally filtering after treatment with fuller's earth.

PROCEDURE. Three cubic centimeters of the melted agar while still warm were transferred to a test tube, and 1 gram of the oil under examination and 1 cc. of acetic acid–acetate buffer were added. The mixture was shaken vigorously for a minute and then poured at once into a petri dish. On solidification, one drop of the pancreas extract was placed on the center of the agar plate with a pipet, and the enzyme was allowed to diffuse through the agar gel for about 20 hours at room temperature (26° C.). At the end of this period the plate was flooded with 10 cc. of a saturated solution of copper sulfate for 5 minutes and poured out. The surface was rinsed with water, again flooded with 10 cc. of 0.01 *N* iodine solution for 2 minutes, and finally rinsed with water.

After this treatment, two distinct zones surrounded by a violet background, *c*, could be clearly seen at the center of the plate. The form of the zones is given in the Figure. The outer zone, *b*, was entirely colorless, while the central zone, *a*, was colored either dirty yellow, green, or bluish green, depending on the nature of the oil. The formation of the colorless outer zone, *b*, is due to the hydrolysis of starch by the action of amylase present in pancreas extract, and the central zone, *a*, is formed by the hydrolytic action of the lipase on the oil. The fatty acids thus liberated form soaps with copper sulfate, which produce zones of different colors with iodine, depending on the nature of the fatty acids liberated.

Several pure samples of butterfat and other oils were tested by the method just outlined and the results of the tests are reported in Table I.

It is clear that butterfat can be easily differentiated from other oils by its characteristic color zone. The color of the central zone produced by different oils depends on the glycerides of which they are composed. Butterfat differs es-

sentially in composition from all other oils and fats except coconut and palm-kernel oils in having a large percentage of steam-volatile and water-soluble fatty acids. Moreover, butyric glyceride, which is so prominently present in butterfat, is not present in coconut and palm-kernel oils, and it is this important and least variable constituent which differentiates butterfat from almost all other known fats.

The special influence of butyric glyceride and other soluble volatile fatty acids contained in butterfat on the color of the central zone is clearly seen by comparing the colors obtained when the fatty acids are impregnated in agar medium and flooded with the reagents. Table II gives the results obtained with different fatty acids when they are impregnated in agar medium and flooded with the reagents. In some cases, particularly in fatty acids having higher melting points, the methyl or ethyl esters of the acids were used. The esters were impregnated in the agar medium and flooded with the reagents after hydrolysis with the pancreas extract.

Table II. Tests of Fatty Acids

Fatty Acids	Colors Obtained after Flooding with Reagents: Copper sulfate	Iodine	Copper sulfate and iodine
Butyric	Colorless	Yellow	Yellow
Caproic	Light blue	Yellow	Greenish yellow
Caprylic	Light blue	Yellow	Greenish yellow
Capric	Light blue	Light yellow	Blue
Lauric	Blue	Traces of yellow	Blue
Myristic	Blue	Traces of yellow	Blue
Palmitic	Blue	Traces of yellow	Blue
Stearic	Blue	Traces of yellow	Blue
Oleic	Blue	Light yellow	Bluish green

It follows that the formation of the yellow color is mainly due to the presence of butyric, caproic, caprylic, and capric acids in some of the fats. The predominance of yellow in the color zone produced by butterfat is due to the presence of the above acids and of butyric glyceride, which reacts only with iodine and not with copper sulfate to produce the yellow color. Butterfat and coconut oil produce yellow-colored central zones, when treated with iodine after hydrolysis with the pancreas extract, the intensity of the color being less in the case of coconut oil. Only butterfat and coconut oil contain notable amounts of these acids which materially contribute to the yellow color of the central zone. These acids are more or less soluble in water and volatile with steam. It is on this principle that the Reichert-Meissl values which are usually employed for the determination of the purity of butterfat are based. The relationship of this test to the Reichert-Meissl value is very important and may give useful information.

This test has been applied to butterfats from different sources and the results obtained are of interest in establishing the relationship between the Reichert-Meissl value and the color test. Thus, fats from ass' and human milk give bluish green color zones, while the butterfats obtained from buffalo's, cow's, and goat's milk produce a yellow color. These observations are in conformity with the Reichert-Meissl values of these butterfats, since the Reichert-Meissl values of ass' and human milk fats have been found to be too low (ass = 13.1; human = 15.8) while those of buffalo, cow, and goat lie between 20 and 36.

Detection of Adulteration of Butterfat

The purity of butterfat is generally ascertained by determining the analytical constants in the sample. But the various constants of pure butterfat are subjected to wide variations depending upon the nature of the animal, the season, and the type of food and no single method has been satisfactory for the determination.

Ghee is a very important article of diet in India, and sin adulteration is being extensively practiced here, a simp and convenient method for the detection of adulteration needed. The method outlined is very well suited f this purpose. The test was therefore extended to know samples of pure ghee, adulterating them with known o in various proportions. It was found that the color of t adulterated sample, on comparison with the color of t central zone produced by pure ghee, was changed from dir yellow to bluish green, the intensity depending on the co centration of the adulterant. The addition of any of t oils belonging to groups 2 and 3 (Table I) always had the effe of increasing the bluish green tint, thereby altering the col of the central zone characteristic of pure ghee. The admi ture of 20 per cent and more of sesame groundnut, coc nut, lard, and other oils with a sample of pure butterf could readily be detected by this method.

The depth of bluish green color of the central zone is to certain extent proportional to the amount of the other present in butterfat, and by making comparative tests wi mixtures of butterfat and the oil in various proportions son idea as to the amount of the adulterant can be obtained.

Samples of pure ghee stored in bottles and tested aft about a year produced zones having the same color as th of a pure fresh sample. The entire surface of the agar pla was colored light green when flooded with copper sulfate, ho ever, probably because of the presence of fatty acids form in the sample after storage. It is hoped that with the he of a tintometer the test can be standardized in terms of t color units, and that a standard color unit for pure butterf can be established.

Other Applications

In addition to effecting the differentiation of oils and t detection of adulteration of butterfat, the test gives a co parative idea of the relative micellar weights of the two e zymes, amylase and lipase. It can be seen from Figure that the amylase diffuses through the gel more rapidly th the lipase, probably because the amylase is associated wi colloids of relatively small molecular size and lipase wi colloids of large molecular size. Based on this difference properties it should be possible to separate the enzym from one another by physical methods.

The method is capable of wide application in the d tection of lipases. It can also be usefully employed in f lowing the changes in the activity of the two enzymes whi always occur together in pancreas. The method is w adapted to the classroom, as a demonstration experime to show the enzyme makeup of pancreas, the nature a mode of enzyme action, and the difference in chemical co position of butterfat and other oils.

It is believed that this method is applicable to the nee of analysts. No elaborate technic or special apparatus required, and the method furnishes a visible record whi can be employed as a simple domestic test to detect the ad teration of butterfat.

Acknowledgment

The authors' thanks are due to V. Subrahmanyan for h keen interest in the present investigation.

Literature Cited

(1) Bhargava, P. N., and Giri, K. V., *J. Indian Inst. Sci.*, 19A, (1936).
(2) Carnot and Mauban, *Compt. rend. soc. biol.*, 81, 98 (1918).
(3) Giri, K. V., *J. Indian Inst. Sci.*, 17A, 126 (1935).
(4) Giri, K. V., *Science*, 81, 343 (1935).

Received December 4, 1936.

Surface Effects of the Platinum Metals on Silver Assay Beads

E. C. FORBES AND F. E. BEAMISH
University of Toronto, Toronto, Ontario, Canada

BECAUSE the wet analysis for the platinum metals in a silver assay bead is a long and tedious process, various attempts have been made to devise simple and rapid methods for their determination.

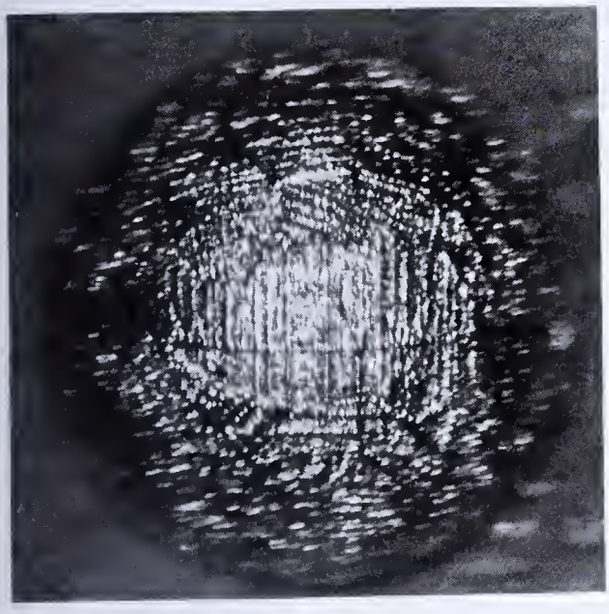

FIGURE 1. PLATINUM-SILVER, 1 TO 12
Magnification, × 40. Weight, 30 mg.

Several authors have suggested that by classification of the surface effects of the platinum metals on the silver assay bead, a surface examination might yield not only qualitative but also approximately quantitative data.

Bannister and Patchin (*1*) investigated the binary systems, platinum metals–gold and platinum metals–silver, and not only dealt with the qualitative effects but also attempted to determine the minimum percentages of each of the platinum metals which would yield specific surface phenomena.

Byers (*2*) described surface effects on the binary systems, platinum metals–silver, stating that characteristic effects are visible in silver beads containing as low as 0.1 per cent of platinum. The authors have made some 1000 platinum metals–silver cupellations with subsequent examination for surface phenomena and have not been able to confirm this conclusion. Byers (*2*) described the effects of osmium on silver beads, but did not state how the composition of the beads was determined; it is probable that the proportions of osmium and silver stated to be present were those added to make the bead. Experimental data to show that the cupellation of silver–osmium beads may result in complete loss of the osmium will be published later by the authors.

Byers (*2*) discussed also the surface effects of the binary systems, platinum metals–gold, and stated that the various members of the platinum group are more often associated with gold than with silver.

According to Langer and Johnston (*3*), the Sudbury precious metal residue contained about 372 parts of silver and 13 parts of gold to 100 parts of platinum metals. Native platinum derived from most of the world sources also contains comparatively little gold. Placer deposits, however, very often carry gold in predominant proportions mechanically mixed with native platinum, and in cases such as these the data given by Byers (*2*) may be of considerable value because, unlike silver, the surface of a pure gold bead is normally smooth with a characteristic color.

In the fire assay for platinum metals, silver is usually added to the charge in the proportion of about 15 to 20 parts to 1 of total platinum metals, in order to facilitate parting by means of sulfuric or nitric acids. Therefore the present report is confined to the discussion of the surface phenomena of the silver–platinum metals bead.

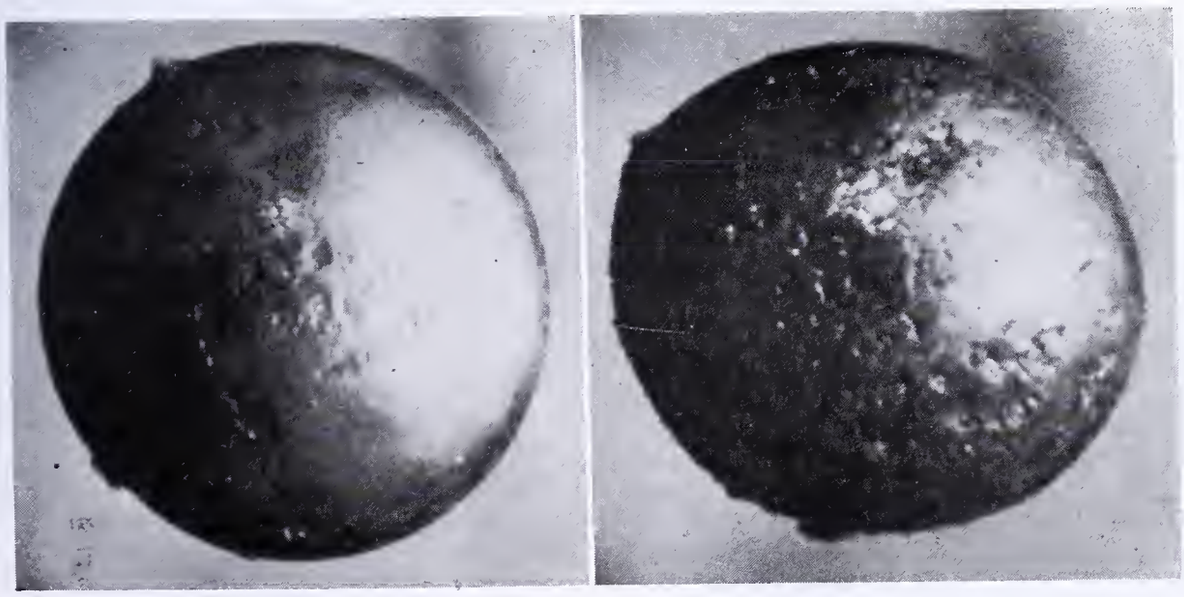

FIGURE 2. PLATINUM-SILVER
Magnification, × 30. Weight, 40 mg.
Left, 1 to 50
Right, 1 to 60

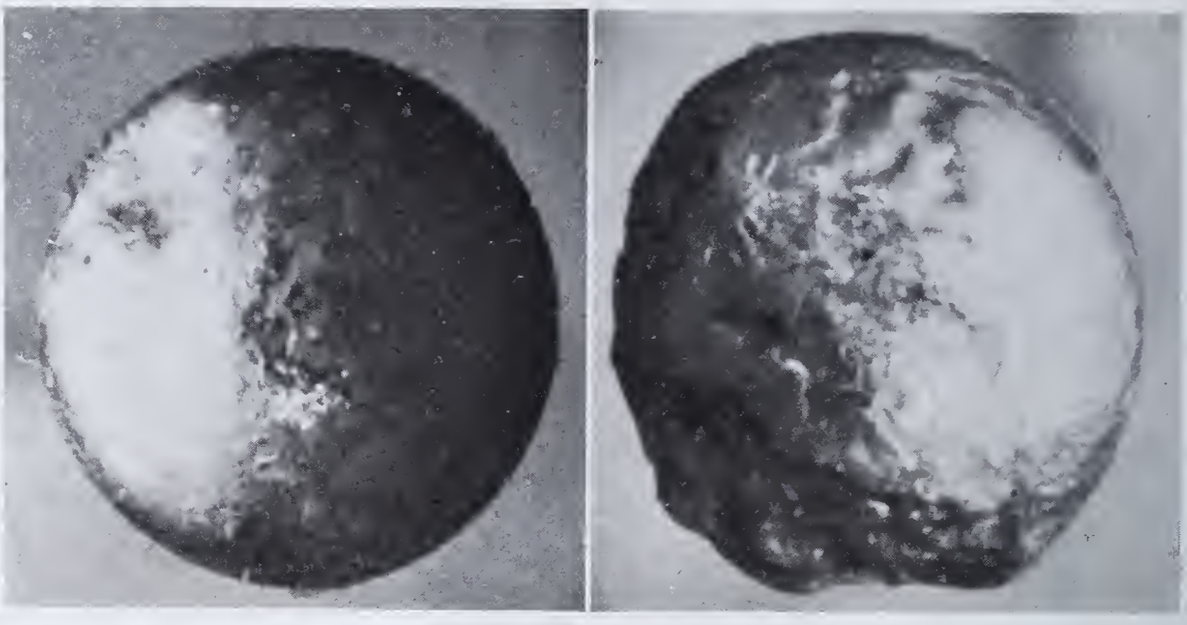

FIGURE 3. SILVER
Magnification, × 30. Weight, 40 mg.

Preparation of Beads

Three procedures were followed in preparing the lead regulus:

1. Half-assay ton samples of synthetic ore and the necessary flux were salted with the platinum metals and the fusion was maintained at about 1200° C. for 0.75 hour. The buttons used weighed about 30 grams.
2. Clean lead shot was placed in a cylinder, and the platinum metals and silver were added and covered with sufficient shot to make a button weighing 30 grams. A piston was fitted into the mold and the samples were submitted to pressure of about 1500 pounds per square inch, producing a smooth compact button.
3. Solutions of the pure platinum metals and silver were made and the required volumes added to a 30-gram sheet-lead dish and carefully evaporated over steam. The lead was rolled to include the platinum metals and silver in the center of the button.

The proportion of platinum metals was determined by analysis of the bead. The reported compositions can be considered accurate to about 0.5 part per hundred.

The cupellation temperature recorded is that of the walls of the bone-ash cupel and was determined by means of an optical pyrometer. No attempt was made to determine the actual temperature of the cupeling bead. In each case, unless otherwise recorded, the cupellation temperature was 950° ± 25° C. After completion of the cupellation process the beads were removed slowly in order to avoid spitting.

These salted beads were arranged in sets, associated with a number of pure silver beads prepared under identical conditions, and were examined by three operators experienced in this work, who had no previous knowledge of the bead composition. The beads were brightly illuminated and examined by means of a microscope with a × 40 magnification.

FIGURE 4. PALLADIUM-SILVER, 1 TO 10
Magnification, × 40. Weight, 30 mg.

Binary Systems

PLATINUM-SILVER. In the case of high percentages of platinum (Figure 1) the surface phenomenon is a somewhat regular pattern of pits characterized by a continuously smooth surface. As the percentage of platinum is decreased, these pits become less frequent.

Figure 2 (left), containing one part of platinum to 50 parts of silver, shows very slight platinum effects, while in Figure 2 (right) the platinum effects are more marked, in spite of the fact that this bead contains 1 part of platinum to 60 parts of silver. This indicates that the intensity of specific platinum effects under the condition above specified could be only very roughly proportional to the percentage of platinum present. When the proportion of platinum to silver was less than about 1 part of platinum to 90 of silver, the operators were unable to distinguish such beads from silver beads made up to the same size and subjected to identical conditions. A comparison of Figure 3 (left), a pure silver bead, and Figure 2 (left), which is near the border area of sensitivity, will indicate the difficulty in identifying beads which contain a much lower percentage of platinum. Figure 3 (right) is also a silver bead. The lower extremely rough portion of the bead is the area which was attached to the cupel.

PALLADIUM-SILVER. When palladium is present in high percentages (Figure 4) the beads resemble platinum-silver in that the surface is covered with smooth-surfaced pits. These pits are much smaller than with platinum and less regular in pattern.

IRIDIUM-SILVER. When iridium is present in high percentages (Figure 5), the bead forms an irregular, often elongated black mass spread over a considerable surface of the cupel. Very often numerous small particles of the bead can be found separated from the main body. As the proportion

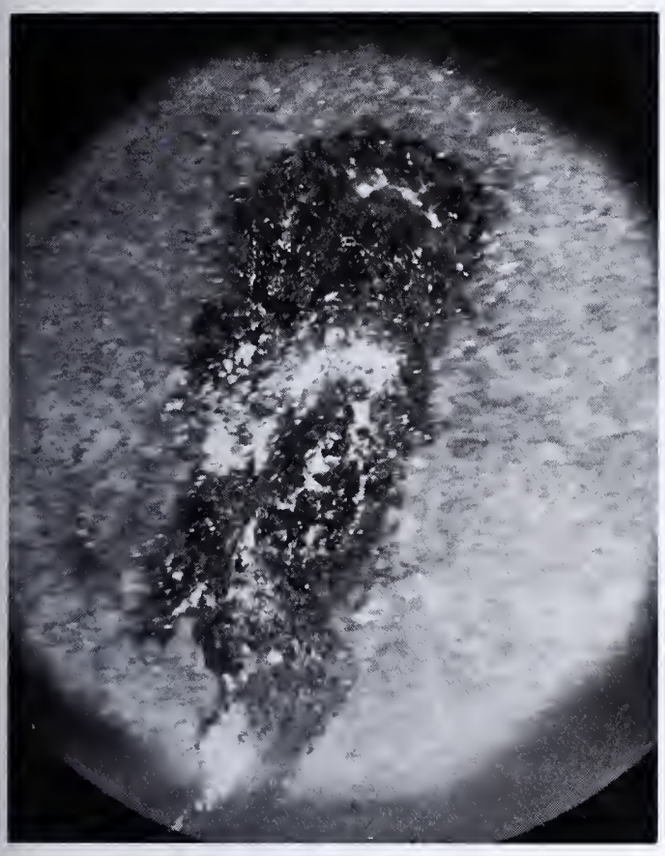

FIGURE 5. IRIDIUM-SILVER, 1 TO 7
Magnification, × 20. Weight, 30 mg.

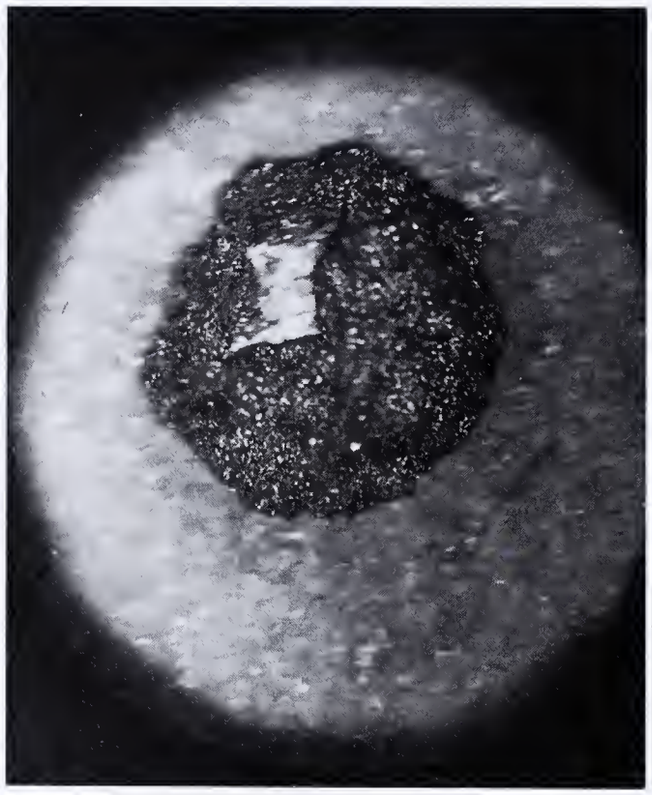

FIGURE 6. RHODIUM-SILVER, 1 TO 10
Magnification, × 17. Weight, 30 mg.

f the iridium is decreased, the bead assumes a spherical shape nd projections of blue-black crystalline clumps appear cattered over the surface. The bead finally assumes a form milar to low percentage platinum beads.

RHODIUM-SILVER. With large percentages of rhodium Figure 6), the bead assumes an irregular shape and is coke-lack in color with an extremely rough surface.

The authors conclude that under conditions above de-cribed the presence of platinum and palladium can be de-ected with certainty only in proportions of 1 or more of latinum or palladium to about 70 of silver. Additional sts made on beads of about 500 and 10 mg. indicate that the limit of sensitivity with respect to platinum is also 1 of platinum to about 70 of silver.

Polycomponent Systems

Buttons were made containing approximately the relative proportion of each of the platinum metals often found in norite deposits—i. e., 8.3 parts of platinum, 9.4 parts of palladium, 0.6 parts of rhodium, 0.6 part of iridium, and 3.0 parts of gold. These buttons were cupeled and the beads examined exactly as described for the binary systems.

Figure 7 (left) illustrates the surface phenomenon, which is different from that of platinum-silver. Examination indicated that under the conditions described above it was possible to detect the platinum metals when the proportion

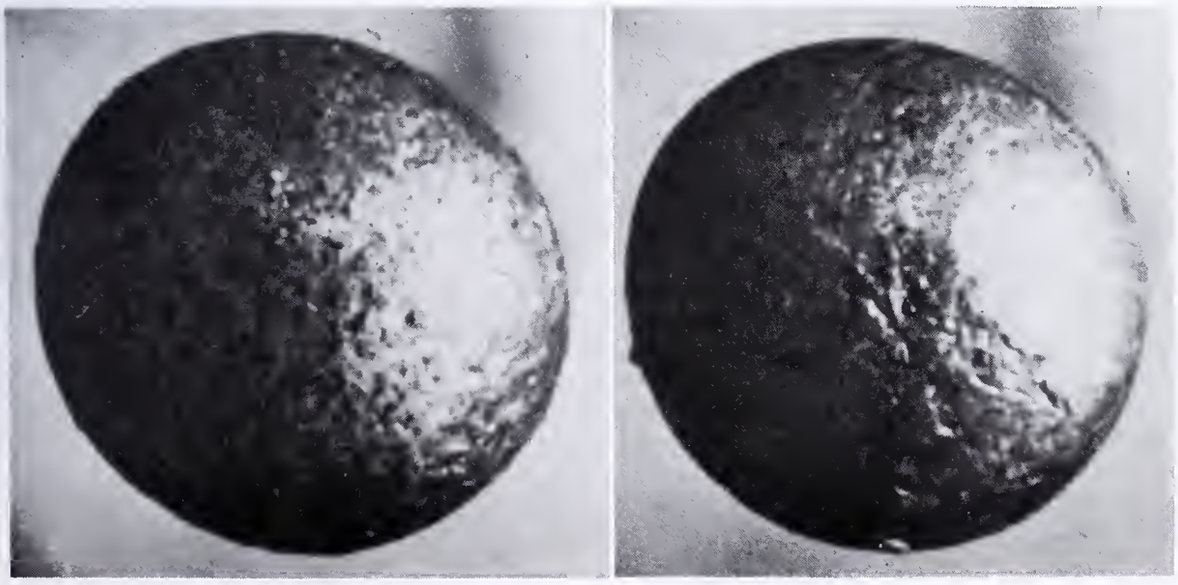

FIGURE 7. PLATINUM METALS–SILVER
Magnification, × 30. Weight, 40 mg.
Left, 1 to 30
Right, 1 to 140

present was about 1 or more of total platinum metals to 150 of silver. Figure 7 (right) indicates the decrease in intensity of surface effects upon reduction of platinum metals content.

Beads containing the same percentage of silver and platinum metals but weighing approximately 8 mg. were prepared as described above; the limit of sensitivity was about the same as with those weighing 40 mg.

Buttons were made containing the following relative proportions of platinum metals; 23.1 per cent gold, 3.2 per cent iridium, and 73.7 per cent platinum. The beads were prepared and treated exactly as described above. The surface phenomena characteristic of platinum could be detected when the percentage of platinum metals was high, but disappeared when the ratio of platinum metals to silver was about 1 to 80; the operators were then no longer able to distinguish beads containing platinum from pure silver beads.

Conclusions

Because so very little information is recorded about properties of the polycomponent systems, platinum metals–silver, the authors feel that more emphasis than is reasonable has been placed upon the value of the surface effects on assay beads for the detection and rough estimation of platinum metals content. The present report is submitted as an attempt to convince the inexperienced assayer that definite conclusions concerning the effect of the platinum metals on a silver assay bead must be avoided.

A number of platinum–silver beads cupeled with a finishing temperature of about 1300° C. gave surface effects of an entirely different character than beads of similar composition cupeled at 950° C.

The rate of cooling also seems to exert a marked effect on the character of surface phenomena.

The authors' experience on at least two occasions has borne out Stanley's (*4*) statement that sometimes one bead will be free from surface effect while others from the same sample show signs.

By reducing the percentage of silver in the bead, an experienced operator can sometimes determine that the ore under examination is of commercial value with respect to total platinum metals, but the absence of specific surface phenomena does not necessarily mean absence of commercial values of platinum metals.

Only an analyst thoroughly familiar with the appearance of platinum metals–silver beads, as well as pure silver beads, can make even approximately accurate guesses concerning the qualitative composition of the platinum metals assay bead.

Acknowledgment

The authors are indebted to H. Mills of Toronto for the photographs of some of the beads, and to H. Collins of Toronto who assisted with the examination of beads.

Literature Cited

(1) Bannister, C. O., and Patchin, G., *J. Chem. Met. Mining Soc. S. Africa*, **14**, 478 (1914).
(2) Byers, J. L., *Am. Inst. Mining Met. Eng.*, preprint (1932).
(3) Langer and Johnston ("Platinum and Allied Deposits of Canada," by J. J. O'Neill and H. C. Gunning), *Can. Dept. Mines, Geol. Survey, Rept.* 2346, *Ec. Geol. Ser.* No. 13, 67 (1934).
(4) Stanley, D. H., *J. Chem. Met. Mining Soc. S. Africa*, **14**, 48 (1914).

Received June 14, 1937.

Modified Capillary Combustion Unit

For a Gas Analysis Apparatus

BERT E. CHRISTENSEN AND ROBERT CARLTON
Department of Chemistry, Oregon State College, Corvallis, Ore.

NUMEROUS attempts have been made to minimize the danger of explosions in slow-combustion methods when carried out by inexperienced operators. Some workers have tried to achieve this purpose by modifying the slow-combustion pipet (*3, 5*), while others have developed different methods for carrying out this analysis (*1, 7*).

The modified pipets are either mechanically unstable, or cannot be readily adapted to technical gas analysis apparatus. The serious objection to the catalytic oxidation methods is the difficulty of preparing the catalyst and the complexity of the resulting apparatus. In most investigations attempts have been made to modify the position or character of the platinum spiral. While the literature contains a number of references to combustion capillaries (*2, 4, 6*), no attempt has been made to incorporate this device into a standard gas analysis apparatus. It is the purpose of this paper to show that the modified capillary unit can replace the slow-combustion pipet and eliminate the hazard of explosions. It offers a more convenient method for the analysis of combustible gases.

Description of Apparatus

The Levy platinum-silica capillary pipet appeared to offer a solution to these problems, but because of the difficulty of

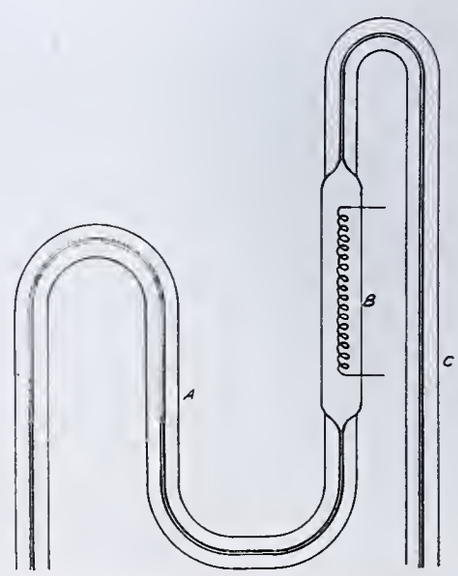

Figure 1. Diagram of Apparatus

A. Intake capillary
B. 8 × 50 mm. combustion unit
C. Outlet capillary

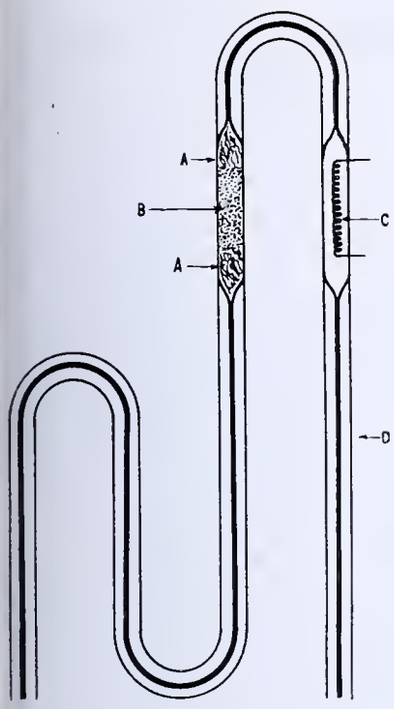

FIGURE 2. DIAGRAM OF CAPILLARY

A. Glass wool
B. 80-mesh sand
C. Heating element
D. Capillary tube

making the unit and of replacing the coil, this device was not adopted.

Another capillary was designed which eliminated both the use of silica and the water cooling. This unit (Figure 1) was made of Pyrex glass, with tungsten leads (made of 20-gage wire) sealed through the glass. The platinum spiral was made of 36-gage wire. The current necessary to cause the wire to glow did not heat the tungsten leads appreciably. The temperature of the spiral was maintained by placing a variable resistance (rheostat, 94 ohms, 2.2 amperes) in series, using a 110-volt alternating current.

(In order to replace the platinum spiral, the pipet may be cut at the seal between the capillary tube and the combustion chamber. The coil can then be readily attached to the electrodes and the tubes resealed.)

Initial experiments were made with methane-oxygen mixtures. In order to prevent explosions from carrying on through to the buret, a safety valve was incorporated in the intake capillary of the combustion unit. The first safety device employed consisted of a bulb, in the capillary of which was placed a mercury bead. Because of the difficulty of maintaining the mercury in the bulb, this method was abandoned.

Further investigation revealed the interesting fact that no auxiliary safety device was required for methane-oxygen mixtures when the intake capillary was less than 0.5 mm. in diameter. However, this method was not applicable to the oxidation of other gases. Experiments with other combustible gases [notably acetylene, hydrogen, and butane (Flamo)] indicated that their flames were readily propagated through even smaller capillaries. To prevent backfire in these cases, a number of devices were tried (mercury traps, valves, fritted-glass plates) but they were either found to be impractical or did not stop the flame.

The simplest possible scheme—namely, a sand trap—then suggested itself. Working with acetylene-oxygen mixtures, which gave the most vicious explosions, it was shown that 10 cm. of 80-mesh sand were required to prevent backfire. On the basis of this information a plug consisting of 2 cm. of 80-mesh sand in a 6-mm. tube was found to stop the flames of such combustible gases as mixtures of oxygen with ethylene, hydrogen, carbon monoxide, and butane. Since the determination of acetylene by combustion methods appears to be impractical, it was not deemed necessary to employ a greater depth of sand.

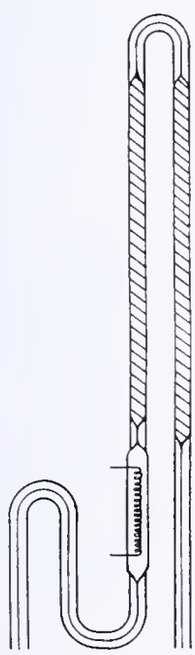

FIGURE 3

The capillary that was finally adopted is shown in Figure 2. The intake capillary tubing used in this apparatus was 0.5 mm. in diameter. The sand plug was placed in such a position that the moisture formed during the combustion would not wet the sand.

Experimental

In order to check the range and limitations of the coil, test runs were made with varying concentrations of methane in oxygen at different space velocities. Results indicated that it was safe to pass methane-oxygen mixtures even in theoretical proportions over the heated spiral. (This was also found to apply to all combustible gases investigated, except acetylene.)

The rate at which the gas could be introduced depended on the concentration. When the methane content was low, the gas was noiselessly burned regardless of the rate. At the higher concentrations (1 part of methane to 2.5 parts of oxygen) as the space velocities were increased, the reaction in the combustion tube became audible. The rate of oxidation was adjusted so that the sound was just perceptible.

The procedure for carrying out an analysis differed from the conventional methods in the following manner: The sample of gas was introduced into the buret and measured, and then sufficient oxygen was added to ensure a slight excess. The total volume was measured before combustion and then passed into the gas reservoir to ensure mixing. This mixture was passed three times over the bright red coil and by-passed back to the buret; thus the gases were always introduced to the combustion chamber from the same direction. The conventional slow-combustion pipet was used as a gas reservoir.

The results of a number of typical analyses are given in the Table.

TABLE I. DETERMINATION OF METHANE

Capillary Pipet	Slow-Combustion Pipet
%	%
91.8	91.9
82.2	82.1
40.9	41.1
12.5	12.3

In addition, oxygen mixtures of carbon monoxide, butane (Flamo), and ethylene were shown to be completely oxidized under similar conditions.

To adapt this method to a standard gas analysis apparatus two modifications are offered, both of which were found to be satisfactory.

1. For combustible gases, one may employ a mounting similar to the usual cupric oxide tube with intake (three-way stopcock) placed between gas buret and potassium hydroxide pipet, and the exit placed between the first and second pipets of the gas train.
2. For methane residues, one may incorporate the combustion unit in one arm of the cupric oxide tube (Figure 3). This permits the use of a simpler manifold.

Summary

The modified capillary combustion pipet offers a safe, precise, and convenient method for the analysis of combustible gases (except acetylene). The unit can be easily incorporated into the standard gas analysis apparatus.

A simple method is given for preventing the propagation of flames through capillary tubing.

Literature Cited

(1) Dennis, L. M., "Gas Analysis," 2nd ed., p. 198, New York, Macmillan Co., 1929.
(2) Evans and Davenport, IND. ENG. CHEM., Anal. Ed., 7, 174 (1935).
(3) Kobe, *Ibid.*, 3, 159 (1931).
(4) Lunge and Ambler, "Technical Gas Analysis," p. 133, London, Gurney and Jackson, 1934.
(5) Steacie, *J. Am. Chem. Soc.*, 52, 2811 (1930).
(6) Walker and Christensen, IND. ENG. CHEM., Anal. Ed., 7, 9 (1935).
(7) Weaver and Ledig, J. IND. ENG. CHEM., 12, 368 (1920).

RECEIVED April 22, 1937.

Constant-Temperature Bath for Molecular Stills

O. A. NELSON AND H. L. HALLER
Bureau of Entomology and Plant Quarantine, U. S. Department of Agriculture, Washington, D. C.

THE desirability of maintaining accurate control of temperature during distillation processes has been known for a long time. It is particularly important in processes involving fractional separation of two or more components from a mixture, regardless of whether the distillation is carried out at atmospheric pressure, under slightly reduced pressure, or at high vacuum. While it is true that if a perfect vacuum could be obtained a liquid would give off vapor at any temperature, nevertheless for liquids of comparatively high boiling points the rate of distillation at room temperature would be so low that no appreciable quantities could be obtained in experimental time. At elevated temperatures the rate of distillation is increased, but the rate may vary for different substances, and it is just this difference in rate of distillation that permits of separation of phlegmatic liquids from one another by the process of fractional distillation (*1*).

Various methods have been proposed for the control of temperature during distillation in the molecular still. In most cases such devices are complicated, require considerable attention, or cannot be depended upon to give satisfactory control.

An apparatus that provides a constant temperature with a minimum amount of attention is shown in Figure 1. It consists essentially of a boiler, *B*, containing a constant-boiling liquid, a heating unit, and a side tube for a reflux condenser. The boiling flask was made from a 750-cc. Kjeldahl flask by heating the glass in the bottom to softness and then drawing it in to form a cup or cavity having a diameter of about 7.6 cm. The diameter of the boiler is 5 cm. and its height to the lower surface of the cup is approximately 16.5 cm. A satisfactory heating coil was made from No. 26 or 28 Nichrome wire of such length as to give about 25 ohms resistance. A variable resistance was inserted in series with the heater so as to permit control of the rate of refluxing of the boiling liquid.

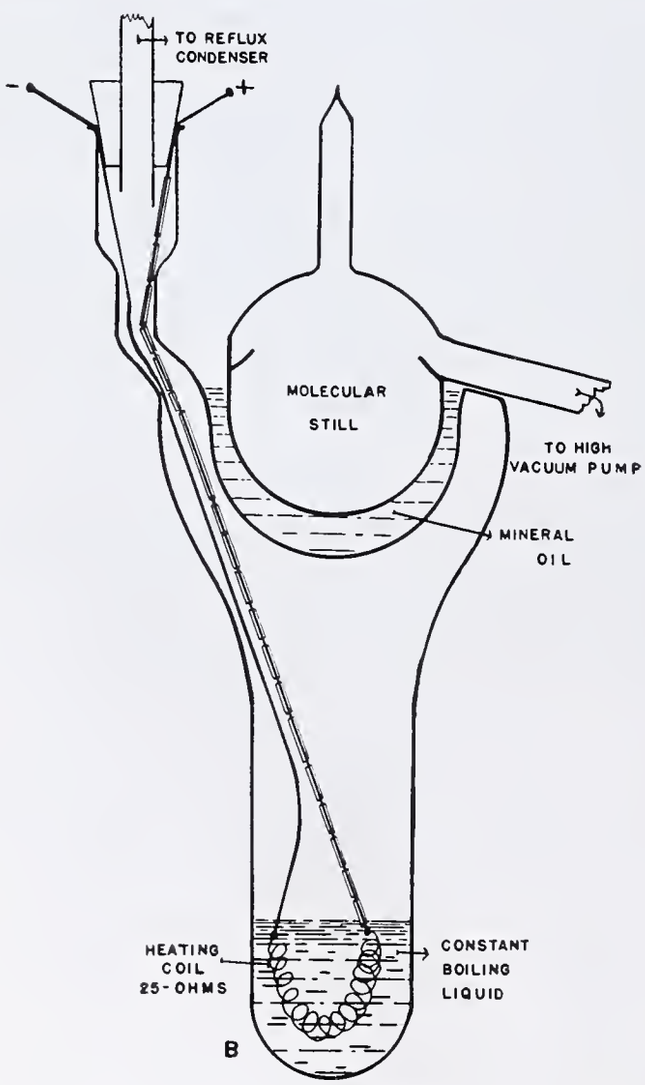

FIGURE 1. CONSTANT-TEMPERATURE BATH

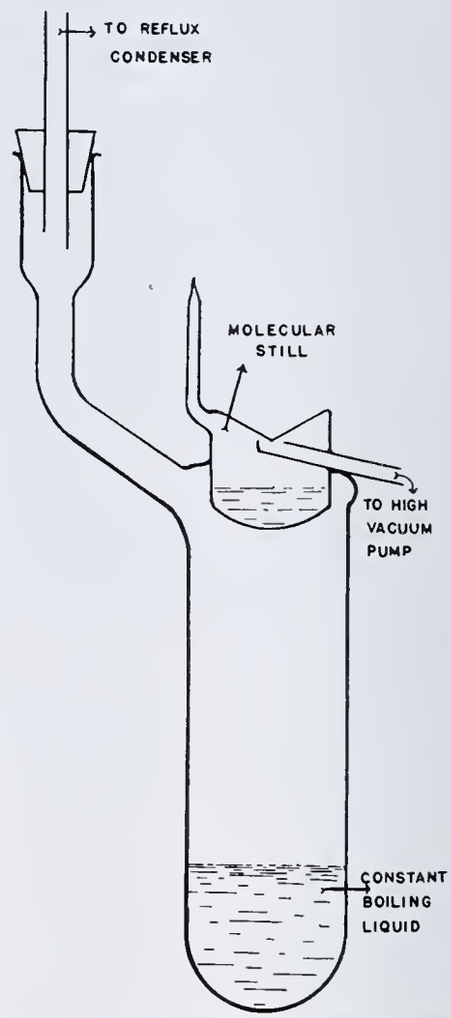

FIGURE 2. CONSTANT-TEMPERATURE BATH

The molecular still (Bureau of Standards type, *2*) used with this constant-temperature bath has a diameter of 6.7 cm., and the space between it and the wall of the cavity is filled with a high-boiling mineral oil, which functions as a heat conductor between the vapors of the constant-boiling liquid and the material in the still.

Another form of the same apparatus is illustrated in Figure 2. The still proper (Hickman type) is 3.8 cm. in diameter and the boiler is 5 cm. in diameter and about 16.5 cm. long.

The principal difference between the two modifications is that in the apparatus shown in Figure 1 the heat from the vapors is conducted to the still by means of a high-boiling mineral oil, while in the one shown in Figure 2 the hot vapors strike the bottom of the still directly.

The apparatus herein described has the advantages of simplicity, ease of construction, and reliability. In addition, when a pure compound is used as a constant-boiling bath, the necessity of determining the temperature of the material in the still is eliminated.

By so controlling the rate of refluxing that no apparent condensation takes place on the bottom of the cup or still, constant temperature can be maintained for any desired length of time. Both constant-temperature baths and stills have been used in this laboratory over long periods of time with satisfactory results.

Literature Cited

(1) Hickman, K., *J. Franklin Inst.*, **213**, 119 (1932).
(2) Mair, B. J., Schicktanz, S. T., and Rose, F. W., *J. Research Natl. Bur. Standards*, **15**, 557 (1935).

RECEIVED May 27, 1937.

Enclosed Apparatus for Laboratory Crystallizations

JOHN D. PIPER AND N. A. KERSTEIN
The Detroit Edison Company, Detroit, Mich.

APPARATUS in which crystallization of low-melting or highly reactive compounds is to be effected should prevent the sample from being contaminated by condensation of moisture or by interaction with the components of the atmosphere. Several such devices have been built by the authors and found to be satisfactory laboratory tools for fractionally crystallizing material from its own mother liquor. Being made of glass, they are readily adaptable for use with other enclosed glass systems employing partial vacua or inert gases.

The general principle upon which each device operates is the same. The liquid to be purified is partially crystallized in one compartment at a chosen temperature, after which the remaining liquid is drained from the crystals and transferred to a second compartment. The crystallized material is then melted and the process is repeated as many times as is desirable, preferably at temperatures progressively closer to the freezing point of the pure liquid. The purified portion is then isolated from the rejected portions by separating the two compartments. Differences in the structure and operation of the devices are illus trated in Figures 1 to 4.

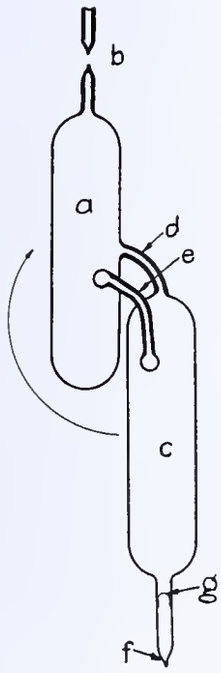

FIGURE 1

Design of Apparatus

In the case of the apparatus shown in Figure 1, the sample is introduced through a large-bore capillary into compartment *a* and the capillary is sealed off at *b* as shown. The apparatus is then tilted in such manner as to allow the sample to flow into compartment *c* through either capillary tube *d* or *e*. The apparatus in the position shown is then immersed in a suitable bath at the temperature desired for the first crystallization. Baths of carbon dioxide and acetone mixtures in wide-mouthed thermos bottles have usually been used for temperatures below about 1° C. Seeding may be accomplished by undercooling a small part of compartment *c*. After crystallization has progressed to the desired extent, the apparatus is removed from the bath, inverted, and quickly restored to the bath in the inverted position. The mother liquor is thus allowed to drain from the crystals through capillary *d* into compartment *a*, capillary *e* serving to equalize the pressure of the system, thus allowing free flow.

When drainage is completed, the apparatus is removed from the bath and restored to its original position by rotating it in the direction shown by the arrow. The rejected liquor is thus trapped in one end of compartment *a*. In repeating the process after subsequent crystallizations, the apparatus is inverted by rotating it in the opposite direction to that shown by the arrow in order to prevent return of the rejected liquor to compartment *c*. After the last crystallization, *d* and *e* are sealed off. Connection of compartment *c* to the apparatus in which its contents are to be used is made at *f*, after the protecting cap, shown at that point, has been removed. Communication between the compartment and the new system is established by breaking window *g* with a suitable hammer enclosed in the system when the connection is made.

Where a number of sample tubes are to be filled with the purified material, the apparatus shown in longitudinal section in Figure 2 is convenient. This apparatus may be operated only under greatly reduced pressures. Similar lettering is used to identify similar parts of the various pieces of apparatus shown in Figures 1 to 4.

In addition to *a* and *c*, the apparatus illustrated in Figure 2 has a compartment *h*, which is filled with sample tubes, *i*, having open capillary ends extending to the open end of *h* as shown. Chiefly because the arrangement gives better mechanical strength, tube *e*, instead of being connected directly to *c*, communicates with it through *h* and *e'*. The shapes of the compartments and the positions of the connecting tubes are designed to prevent trapping of condensed vapors during the drying process.

With the apparatus in the position indicated the liquid is dried over an appropriate desiccant in flask *k* and distilled into flask *l* through capillary *m*, which is then sealed off. Additional drying, if necessary, may be accomplished by interposing similar flasks between *k* and *l*. The liquid in flask *l* is then refluxed over the desiccant and finally distilled into the crystallization apparatus. During the distilling process compartments *a*, *c*, and *h* are placed parallel to the line marked "filling angle."

After fractional crystallization has been completed in essentially the same way as was described in connection with Figure 1 and the purified liquid has been isolated by sealing off capillary tubes *d* and *e*, the liquid from *c* is transferred to *h* by alternately warming and cooling the two compartments, if necessary. Tube *e'* is then sealed off and, with the tips pointing downward, the sample tubes are filled by slowly admitting dry nitrogen through capillary *j*, the end of which is broken within a rubber tube supplying the nitrogen. The sample tubes thus filled are then removed from *h*, which is cracked open, and the capillary ends of the tubes are sealed.

In cases where the mother liquor does not readily drain from the crystallized material, apparatus employing centrifugalization has been used. One of these devices is shown in inverted position in Figure 3.

Except that compartment *a* is almost in line with compartment *c* and that tube *e*, being unnecessary, is omitted, the glass part of this apparatus is similar to that shown in Figure 1. Op-

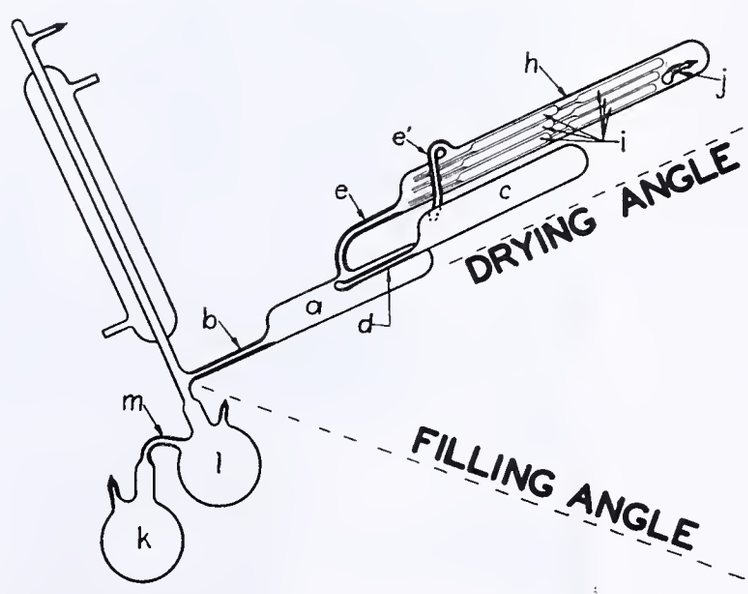

FIGURE 2

eration is also similar, except that during the draining periods the apparatus is suspended in a bath in a centrifuge cup, *n*, by means of a suitable split clamp, *o*, containing a split rubber cushion, *p*, and the entire assembly is rotated at low speeds in the usual manner.

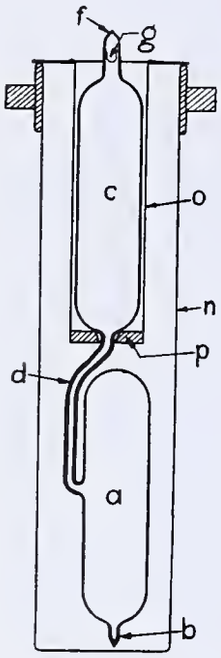

FIGURE 3

Because centrifuge cups that can be used with an ordinary laboratory centrifuge are of limited size and are difficult to insulate, the use of this apparatus is limited to small samples of materials whose melting points are not too different from the temperature attained in the centrifuge during operation.

For use with materials of low melting point, the apparatus shown in Figure 4 is satisfactory.

Operation is similar to that of the apparatus shown in Figure 1, except that, after the sample contained in the lower half of compartment *c* is partially crystallized, the enclosed system is rotated about its *y-y* axis by means of a stirring motor attached at *f*. The mother liquor is thus discharged by centrifugal force through capillary tubes *d* and *d'* into compartment *a*, which has a larger diameter than *c*. The top of thermos bottle *n* is closed with a tight-fitting stopper, *q*, through which extends thermometer *r* and brass upper bearing *s* which may be made from a cork borer of suitable size. The lower bearing, *t*, is simply a strip of metal through which a hole has been punched large enough to accommodate *b*. The ends of the strip are fastened, as shown, to a split circular collar which is held against the inside of the thermos bottle by friction. The buoyancy of the enclosed system in a carbon dioxide and acetone bath is such that the end thrust is upward and is taken up by the bearings of the stirring motor. Unless the center of gravity of that system is too far from the *y-y* axis, vibrations due to small imperfections in construction of the glass parts seem to do no harm, provided the thermos bottle is mounted in some soft material, such as cotton, which permits the bottle to move slightly. Sufficient bath is used to fill the bottle up to the stopper, and keep compartment *c* in contact with the bath during centrifuging.

The several devices are easily made by anyone who can do simple glass blowing, and though the parts are isolated during the crystallizations, they may be reassembled repeatedly. Types of apparatus shown in Figures 1 and 2 have been used rather extensively for crystallizing some organic acids for investigations concerning dielectrics (*1*, *2*). The acids crystallized are listed by Piper et al. (*1*, *2*), with comment concerning their purity.

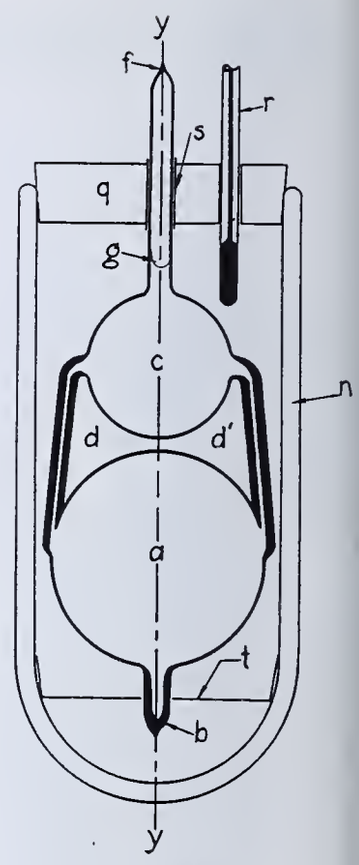

FIGURE 4

Apparatus shown in Figures 3 and 4 represent more recent modifications, which up to the present time have been used to crystallize two hydrocarbons, indene and dimethyl fulvene, whose melting points in sealed tubes at approximately their own vapor pressures were −1.8 and 3.4, respectively. No melting point determinations were made at atmospheric pressure in these cases. Other modifications more suitable for a particular purpose may be suggested by these descriptions.

Literature Cited

(1) Piper, J. D., Kerstein, N. A., and Fleiger, A. G., IND. ENG. CHEM. (to be published).

(2) Piper, J. D., Thomas, D. E. F., and Smith, C. C., *Ibid.*, **28**, 843 (1936).

RECEIVED June 1, 1937.

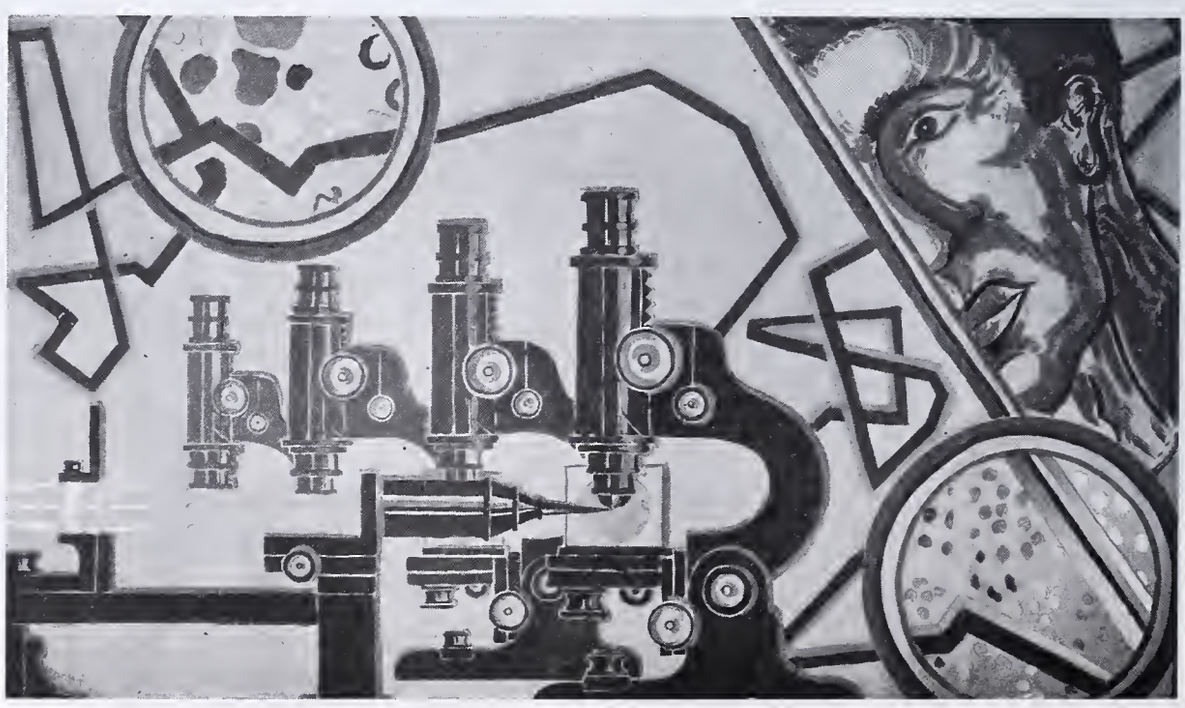

ANALYTICAL EDITION

INDUSTRIAL and ENGINEERING CHEMISTRY

Harrison E. Howe, Editor

Determination of Arsenic in Mineral Oil Solutions

J. B. LEWIS AND E. L. BALDESCHWIELER, Standard Oil Development Company, Linden, N. J.

IN THE COURSE of a study on the solubility of arsenicals in mineral oils it was necessary to obtain with accuracy the rsenic content of the solutions under examination; the mounts of arsenic to be determined varied between 0.05 nd 0.20 per cent. The problem was to destroy the mineral il and convert the arsenic into a compound suitable for uantitative determination. All the procedures found in the iterature gave low results, mostly because of loss of arsenic uring the process of destroying the excessive amount of rganic matter. This was true, for example, of the Kohnbrest procedure (*8*) involving calcination with magnesium itrate, and of combustion with oxygen in a calorimeter omb as recommended by Garelli and Carli (*5*). Combusion in a current of oxygen in a tube and bubbling the reultant gases in a caustic soda solution gave low results in the resence of combustion accelerators (PbO_2, Pb_3O_4, CuO), hile incomplete combustion was obtained in their absence. Destruction of the organic matter with sulfuric and nitric cids as recommended by Baldeschwieler (*1*) was unsuccessul, probably owing to the volatilization of some of the rsenical.

Oxidation procedures found unsatisfactory, mainly because of the difficulty in completely oxidizing the mineral oils, included those of Rupp and Lehmann (*14*) using sulfuric acid, potassium permanganate, and hydrogen peroxide, or Ewins' modification (*4*) with potassium sulfate; Rogers (*13*) and Maillard (*10*) using ammonium persulfate and sulfuric acid; Poggi and Polverini (*11*) using potassium persulfate; Stollé and Fechtig (*16*) using potassium nitrate, ammonium sulfate, and sulfuric acid; Stettbacher (*15*) using sulfuric acid and hydrogen peroxide; Tabern and Shelberg (*17*) using fuming sulfuric acid and hydrogen peroxide; Leulier and Dreyfuss (*9*) using sulfuric perchloric and nitric acids; and Kahane (*7*).

The procedure adopted consisted of digesting the sample with sulfuric acid, nitric acid, and potassium sulfate in a Kjeldahl flask, as suggested by Robertson (*12*), Glycart (*6*), Delaville and Belin (*3*), and Cislak and Hamilton (*2*). A number of precautions were introduced in order to avoid losses by volatilization, either of the unchanged arsenical or of arsenious compounds which may be formed through reduction during the first stage of the process when charring occurs.

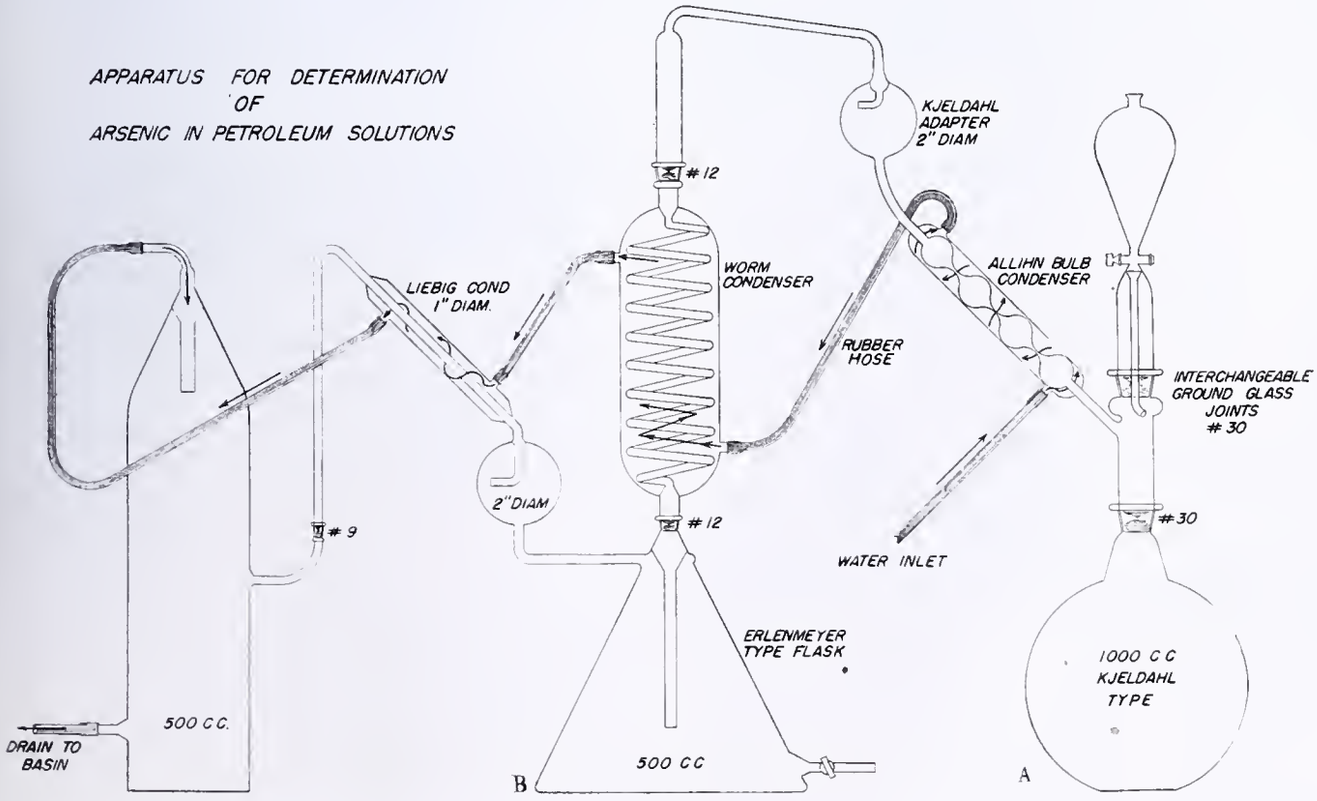

FIGURE 1

The development of a suitable apparatus required considerable experimenting. For this work the arsenic compound chosen was phenyldichloroarsine, $C_6H_5AsCl_2$, which is a typical and rather volatile arsenical. The determination of arsenic in the compound itself requires no elaborate setup, an 800-cc. Kjeldahl flask covered with a funnel with a bent stem being sufficient for the purpose. However, determination in mineral oil blends necessitates the use of a complicated setup, inasmuch as the more drastic treatment necessary to ensure complete decomposition of the additional organic matter greatly favors loss of arsenic by volatilization. In fact it was found that volatilization of some of the arsenic could not be altogether prevented; for this reason, the apparatus finally developed included provisions for recovering volatilized arsenic.

Apparatus

A sketch of the apparatus is shown in Figure 1. Pyrex glass was used throughout. The elaborate condensing system is necessary in order to recover the last traces of arsenic. A simpler apparatus consisting of a condenser surmounting a Kjeldahl flask was found unsatisfactory because of loss of arsenic and difficulties in the digestion procedure.

Method

A 3- to 5-gram sample of the mineral oil arsenical solution together with 10 grams of anhydrous potassium sulfate is placed in flask *A*, and the apparatus is assembled. About 20 cc. of concentrated sulfuric acid are then added through the separatory funnel, and the reaction is allowed to proceed until charring occurs. At this point 20 cc. of concentrated nitric acid are added and heat is applied with a very low flame. When the reaction subsides, more nitric acid is added and the heating is continued to gentle boiling, this process being repeated until the solution is clear and of a straw-yellow color. This should take about 2 hours. In general the heating should be so regulated that no undecomposed hydrocarbons pass out of the first condenser.

The apparatus is then disconnected. Both the washings from the condensers and the contents of receiving flask *B* are transferred to a large beaker. The solution is concentrated on a steam bath to a low volume and added to the solution in flask *A*. It is then heated over a wire gauze to fumes of sulfur trioxide; a few drops of nitric acid are added, and the solution is again heated to fuming, cooled in ice, and diluted with water. The solution is now ready for the arsenic determination, which can be carried out by any standard method. The authors, however, prefer to precipitate the arsenic with hydrogen sulfide, oxidize the arsenic trisulfide with hydrogen peroxide, precipitate with ammonium hydroxide and magnesia mixture, filter the precipitate, ignite, and weigh as $Mg_2As_2O_7$.

Table I. Arsenic Determinations

Material	Samples Used	Arsenic Content Theoretical	Arsenic Content Found
	Grams	*Gram*	*Gram*
Phenyldichloroarsine	0.5000	0.1681	0.1670
	0.5900	0.1983	0.1983
	0.6000	0.2017	0 2022
Gas oil containing 0.75 % phenyldichloroarsine	8.3685	0.0212	0.0212
Same with 0.97% phenyldichloroarsine	4.2470	0.0138	0.0131
Lubricating oil with 1.09% phenyldichloroarsine	5.0072	0.0184	0.0182

Results of arsenic determinations obtained on phenyldichloroarsine and on mineral oil blends of the latter are given in Table I. The arsenic determinations on the diphenylchloroarsine itself were carried out by oxidation with sulfuric and nitric acids in a Kjeldahl flask covered by a funnel, while on the oil blends they were carried out by the suggested procedure. Table I shows that the proposed procedure yields accurate values in the determination of arsenic in mineral oil blends of arsenicals.

Summary

The determination of arsenic in mineral oil solutions of arsenicals is carried out in a Kjeldahl flask, provision being made for condensing and collecting volatile products i order to avoid loss of arsenic by volatilization, during th process of oxidizing the mineral oil. While admittedly lon and tedious, the method gives accurate results.

Acknowledgment

The authors wish to thank R. G. Sloane of these labora tories for his counsel and criticisms.

Literature Cited

(1) Baldeschwieler, E. L., Ind. Eng. Chem., Anal. Ed., 4, 101 (1932
(2) Cislak, F. E., and Hamilton, C. S., *J. Am. Chem. Soc.*, 52, 6 (1930).
(3) Delaville, M., and Belin, Mme. J., *Bull. soc. chim. biol.*, 9, (1926).
(4) Ewins, A. J., *J. Chem. Soc.*, 109, 1355 (1916).
(5) Garelli, F., and Carli, B., *Ann. chim. applicata*, 23, 129 (1933
(6) Glycart, C. K., *J. Assoc. Official Agr. Chem.*, 8, 509 (1925).
(7) Kahane, E., *J. pharm. chim.*, 19, 116 (1934).
(8) Kohn-Abrest, E., *Bull. soc. chim.*, 23, 7 (1918).
(9) Leulier, A., and Dreyfuss, Y., *J. pharm. chim.*, [6] 10, 4 (1929).
(10) Maillard, L. C., *Bull. soc. chim.*, 25, 192 (1919).
(11) Poggi, R., and Polverini, A., *Atti accad. Lincei*, [6] 4, 315 (192
(12) Robertson, G. R., *J. Am. Chem. Soc.*, 43, 182 (1921).
(13) Rogers, L. J., *Can. Chem. J.*, 3, 398 (1919).
(14) Rupp, E., and Lehmann, F., *Apoth. Ztg.*, 26, 203 (1911); *Arc Pharm.*, 250, 382 (1913).
(15) Stettbacher, A., *Tech. u. Ind. Schweiz. Chem.-Ztg.*, 1924, 242.
(16) Stollé, R., and Fechtig, O., *Ber. pharm. Ges.*, 33, 5 (1923).
(17) Tabern, D. L., and Shelberg, E. F., Ind. Eng. Chem., An Ed., 4, 401 (1932).

Received June 15, 1937.

Determination of Iron

With 7-Iodo-8-hydroxyquinoline-5-sulfonic Acid

H. W. SWANK[1] with M. G. MELLON
Purdue University, Lafayette, Ind.

YOE in 1932 (*6*) proposed the use of 7-iodo-8-hydrox quinoline-5-sulfonic acid (ferron) as a reagent for dete mining iron colorimetrically. This acid gives an oran aqueous solution which becomes green in the presence ferric iron. Copper, nickel, chromium, cobalt, and aluminu were reported to interfere.

The purpose of the present paper is to describe a stud made to determine the conditions under which the ferr method gives the most accurate results, noting particular the effect of other metals on the color reaction. Since th completion of the work reported here, Yoe and Hall (*7*) ha published additional data on the ferron method.

Apparatus and Methods

Although most investigations of colorimetric metho of analysis have been made by visual comparison, a proc dure more accurate than that used in routine work is d sirable for investigating the effect of variable factors. T recent development of the photoelectric recording spectr photometer (*5*) has given the analyst a method of col measurement which eliminates subjective error and is capab

[1] Present address, E. I. du Pont de Nemours & Company, Inc., Buffal N. Y.

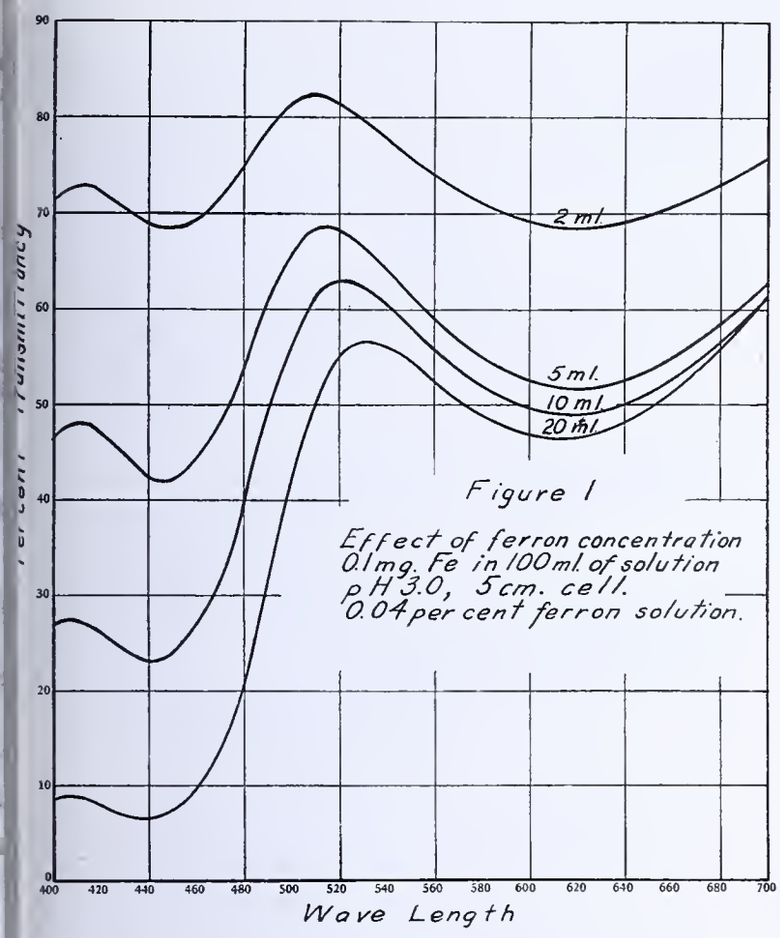

high accuracy and precision. By means of the modified eneral Electric spectrophotometer used in this study, ery small differences in color intensity can be de- cted with certainty.

The ratio of concentrations can be calculated from e transmittancy curves by means of Beer's law. If e color is not proportional to concentration, such lculations must be restricted to a small range. Only few spectrophotometric curves are presented, but ey are sufficient to indicate the advantages of this ethod.

Standard solutions of iron were prepared by dissolving eighed amounts of iron wire or ferrous ammonium sulfate dilute sulfuric or hydrochloric acid. Perchloric acid was ed in the presence of lead or silver. Complete oxida- n of the iron was ensured by adding hydrogen peroxide d boiling out the excess. Standard solutions of the etals were prepared from the sulfate, chloride, or nitrate lts. Sodium, potassium, or ammonium salts were used r studies of the effect of anions. Clark's (*2*) and Brit- n's (*1*) directions served for the preparation of buffer ixtures.

Ten milliliters of 0.04 per cent aqueous ferron solution d 0.1 mg. of iron in 100 ml. of solution were used for l the curves shown in this paper, as this concentra- n gives an optimum intensity of color for comparisons rough a depth of 5 to 10 cm. The transmittancy curves ere determined for a solution thickness of 5.0 cm. The sorption of the glass cell was compensated by means of a milar cell filled with distilled water.

The Color Reaction

The transmittancy curves in Figure 1 show the ex- nt to which the color is dependent on the concentra- n of the reagent. Similar curves for a fixed concen- ation of ferron and variable amounts of iron prove at the color is not proportional to the concen- ation of the iron. These data are summarized in able I.

Table I. Validity of Beer's Law for a Fixed Concentration of Ferron and Varying Amounts of Iron

(pH 3.0; 5.0-cm. cell; 10 ml. of 0.04 per cent ferron reagent)

Iron	Transmittancy at 610 Mμ Observed	Calculated
Mg./100 ml.	%	%
0.02	84.5	..
0.05	69.0	65.5
0.10	46.5	43.0
0.20	25.5	18.5
0.50	12.5	1.5

The transmittancy value for 0.02 mg. of iron was taken as the starting point for the calculations. It is evident that as the iron concentration increases, the transmittancy does not decrease to the extent calculated from Beer's law. Yoe and Hall (*7*) reported that the color intensity does follow Beer's law, but their experiments were made with a constant ratio of ferron to iron, a condition that is not encountered in actual analytical work where the iron content is unknown.

Below a pH of 7 ferron functions as a hydrogen-ion indicator, the yellow or orange hue gradually decreasing with a decrease in pH (curves 1 and 2, Figure 2). The green hue produced by iron is equally affected by pH, as shown by curves 3 to 9. The shift in color is less pronounced between pH 2 and 3, but even then it is great enough to require holding the pH constant to within 0.2 unit if an error greater than 2 per cent is to be avoided. This conclusion is not in close agreement with that of Clark and Sieling (*3*) who concluded that the color does not change between pH 2.7 and 3.2. However, the curves show a change in color in-

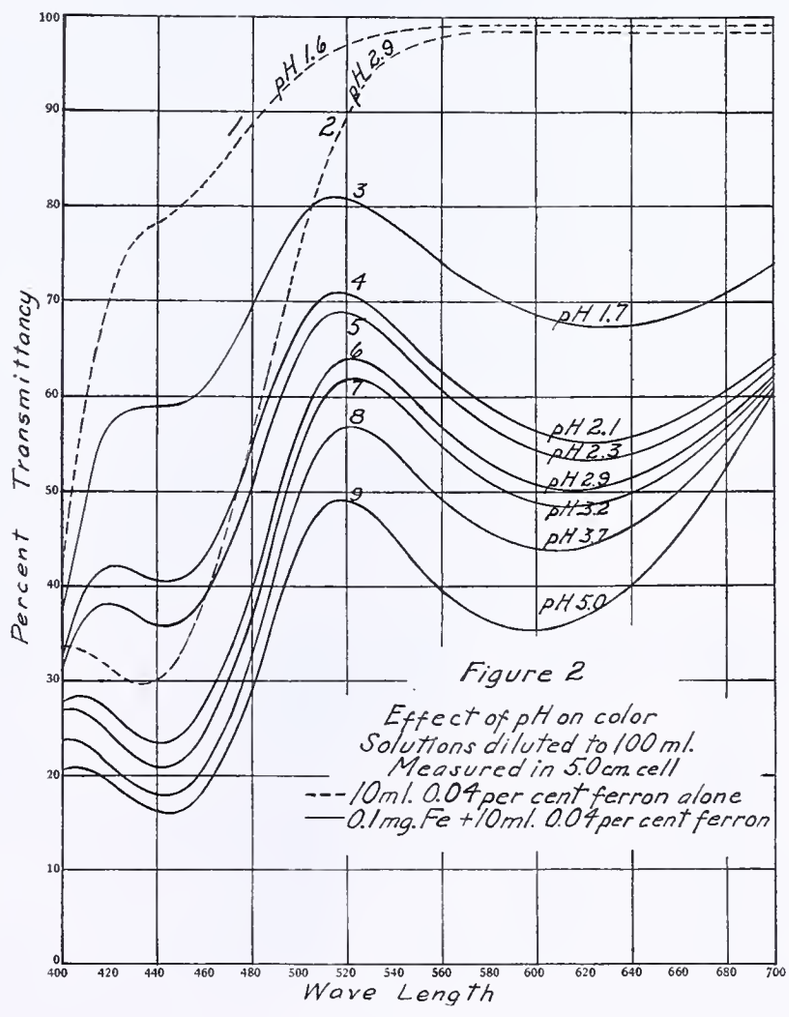

tensity equivalent to a 5 per cent variation in iron content for a range in pH of 2.9 to 3.2 alone.

This sensitivity of the color reaction to slight changes in pH makes the use of a buffer imperative for accurate work. Potassium acid phthalate (4), glycine, or sodium acetate buffers are suitable, although each affects the color slightly. It is necessary to maintain the same concentration and type of buffer in both the standard and unknown. Buffers containing citrate or phosphate compounds are not suitable. The pH must be adjusted very nearly to that desired before adding the buffer mixture.

Tests over a period of 9 days showed no fading of the color of solutions exposed to diffuse daylight, confirming Yoe's statement concerning the stability of the color.

The Effect of Anions

Many of the common anions prevent the full development of the color. A typical example is given in Figure 3, curves 1 and 2, for the effect of 1.0 mg. of fluoride ion, and similar effects are caused by pyrophosphate, orthophosphate, cyanide, citrate, tartrate, and oxalate ions.

Pyrophosphate ion interferes to such an extent that it must be practically absent from solution (curve 5, Figure 3). The effect of orthophosphate is less pronounced and somewhat variable. Yoe and Hall (7) state that equilibrium is not reached immediately for the iron-ferron complex in the presence of orthophosphate ion, but that 5 minutes to 3 hours are necessary to reach the maximum intensity. Curves 3 and 4 show the effect of 20 and 10 mg. of phosphorus pentoxide, as sodium dihydrogen phosphate, on the color with 0.10 mg. of iron. The phosphate was added to the iron in a volume of 50 ml. and the spectrophotometric curves were completed within 5 minutes after mixing. A second curve for 10 mg. of phosphorus pentoxide made after a solution had stood 20 minutes showed no appreciable difference. The minimum bleaching effect observed for 10 mg. of phosphorus pentoxide, present as orthophosphate, was 8 per cent for determinations made within 10 minutes after adding the reagent. For these conditions the limiting concentration is approximately 3 mg., expressed as the pentoxide. This value, as well as those for other ions, is probably lower than would be obtained by visual comparison. Because of the cumulative effect of interfering substances, the limiting concentration for each should be set below that detectable by the eye. The effect of other anions is summarized Table II.

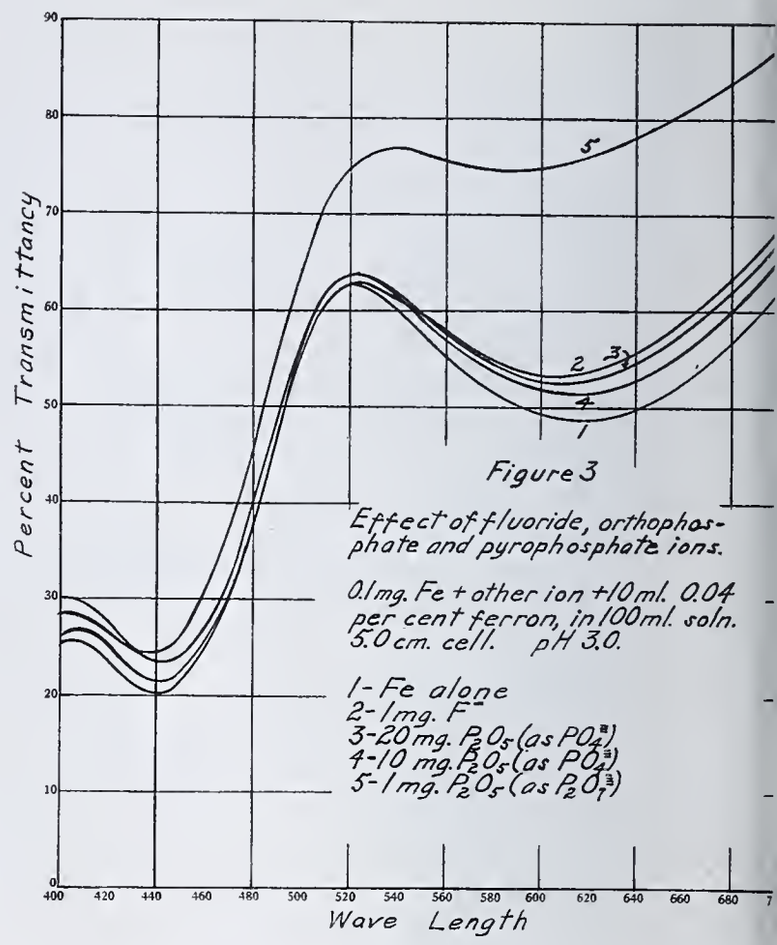

Table II. Effect of Common Anions on the Color Developed by Iron

(0.1 mg. of iron in 100 ml. of solution)

Ion	Concentration	pH	Change in Color Intensity	Approximate Limiting Concentration
	Mg./100 ml.			*Mg.*
Borate	150 (B_2O_3)	3.0	Negligible	...
Bromide	200	2.5	Negligible	...
Chlorate	200	2.5	Negligible	...
Citrate	50	2.0	30% decrease	...
	10	2.0	5% decrease	5
Cyanide	10	3.0	16% decrease	...
	2	3.0	10% decrease	0.2
Fluoride	10	3.0	Very large	...
	1	3.0	10% decrease	0.2
Iodide		2.5	Variable	0.0
Orthophosphate	10 (P_2O_5)	2.5	8% decrease	2 (P_2O_5)
Oxalate	2	2.0	Very large	...
	1	3.0	50% decrease	0.0
Pyrophosphate	1 (P_2O_5)	3.0	Very large	0.0
Sulfate	500	3.0	Negligible	...
Sulfite	200	2.5	Negligible	...
Tartrate	150	2.5	20% decrease	...
	50	2.5	4% decrease	25
Thiocyanate	50	2.5	Negligible	...

The Effect of Cations

Yoe reported that no cation other than iron forms a strong colored complex with ferron and some workers have i correctly inferred that other metals do not interfere. spectrophotometric study shows that there is very litt correlation between the absence of color and the degree interference. The color is a function of the ferron as well iron concentration; consequently, any ion which reacts wi ferron, regardless of whether a color is produced, will affe the color produced by iron.

The effect of copper on ferron alone is evident from curv 1 and 2, Figure 4. Curve 4 shows the appreciable chan in the transmittancy curve caused by 0.1 mg. of copper the presence of an equal amount of iron. Cobalt and nick react with ferron in a similar manner. With nickel, at leas the degree of interference varies with pH, being greater pH 3.0 than at 2.0; with either nickel or cobalt, the limitir concentration is reached before the color of the ions becom appreciable. Chromium shows no evidence of reacting wit ferron. Aluminum combines with ferron to give a near colorless complex with a bleaching effect on the color wit iron. The extent of the interference varies several fold for change in pH from 2.0 to 3.0, with a more pronounced bleac ing action at the higher value. Curve 5, Figure 4, indicat the extent of the change in the transmittancy curve pr duced by 2 mg. of aluminum for a pH of 3.0.

Table III indicates the effects of different amounts aluminum as well as other metals which show little or n interference.

Discussion

The interference of anions is best interpreted as being d to the relative instability of the iron-ferron complex, con

pared to the tendency of iron to combine with ions such as fluoride or phosphate. The reaction of ferron with metals other than iron accounts for the interference from this source. Because the color is dependent on the concentration of ferron, the interference caused by metals cannot be eliminated by adding a large excess of reagent. Yoe and Hall (7) state that a yellow filter helps in making color matches visually in the presence of some interfering substances.

The ferron method for iron seems to have few advantages over older methods with respect to interference by other metals and by anions. The great stability of the color is a distinct advantage from the standpoint of preservation of a set of standards.

The approximate limits given in Tables II and III for interfering ions are calculated for an error of 2 per cent. Although this may at first thought appear too low in comparison with an error of 5 to 10 per cent which may result in matching colors visually, each factor which influences the reproducibility of the color itself must be controlled within such a limit if a total error considerably greater than that caused by visual matching is to be avoided. The same limits are not obtained for all concentrations of iron, but the relative effect remains substantially the same.

Conclusions

Yoe's colorimetric method of determining ferric iron is a valuable addition to such methods, but necessitates more careful control of experimental conditions than use of a reagent such as thioglycollic acid.

The color is dependent on both the reagent concentration and the pH. A pH of 2.0 to 3.0 is suitable, but for a given series of comparisons the value must be held constant to 0.2 pH unit if the error from this source is not to exceed 2 per cent.

Potassium acid phthalate, glycine, or sodium acetate buffers are satisfactory for securing a constant pH. Citrate or phosphate buffers interfere with the development of the color.

The color is permanent for at least a week, even for solutions exposed to diffuse daylight.

Ferron is specific for ferric iron in the sense that no other ion tested gives a green color with it, but not in the sense that it is free from interference by other metals. Some common ions interfere enough to make a preliminary separation of iron necessary for the analysis of many products. The extent of interference for some metals is a function of pH. The effect of a metallic ion cannot be determined by noting whether a color is produced with ferron.

The color of the reagent and the lack of proportionality between the color of the ferron-iron complex and the concentration of the iron require the use of a constant-depth method of color comparison.

Table III. Effect of Common Cations on the Color Developed by Iron

(0.1 mg. of iron in 100 ml. of solution)

Ion	Concentration	pH	Change in Color Intensity	Approximate Limiting Concentration
	Mg./100 ml.			*Mg.*
Aluminum	10	2.0	6% decrease	4
	2	2.5	5% decrease	1
	10	2.5	18% decrease	...
	2	3.0	13% decrease	0.3
	10	3.0	33% decrease	...
Ammonium	200	3.0	Negligible	...
Antimonous	2	2.5	Negligible	...
Arsenic	50	2.5	Negligible	...
Arsenious	50	2.5	Negligible	...
Barium	100	2.6	Negligible	...
Beryllium	50	2.0	Negligible	...
Bismuth	0.5	2.0	Negligible	...
Cadmium	250	2.5	Negligible	...
Calcium	150	2.0	Negligible	...
Chloroplatinate	7.5 (Pt)	3.0	4% increase	4
Chromic	2	3.0	15% increase	0.5
Cobaltous	10	3.0	16% decrease	...
	2	3.0	4% decrease	1
Cupric	0.1	3.0	Decrease	0.02
Lead	10	2.6	2% decrease	10
Lithium	150	3.0	Negligible	...
Magnesium	100	2.0	Negligible	...
Manganous	50	2.0	Negligible	...
Mercuric	50	2.6	Negligible	...
Nickelous	2	2.0	2% decrease	2
	0.2	2.6	4% decrease	0.1
Potassium	200	3.0	Negligible	...
Silver	60	2.7	Negligible	...
Sodium	200	3.0	Negligible	...
Stannic[a]	...	...	.....	...
Strontium	150	2.0	Negligible	...
Thorium[b]	...	...	.....	3
Uranyl	10	2.5	2% decrease	10
Zinc	50	2.0	Negligible	...

[a] Hydrolyzes.
[b] Bluish hue.

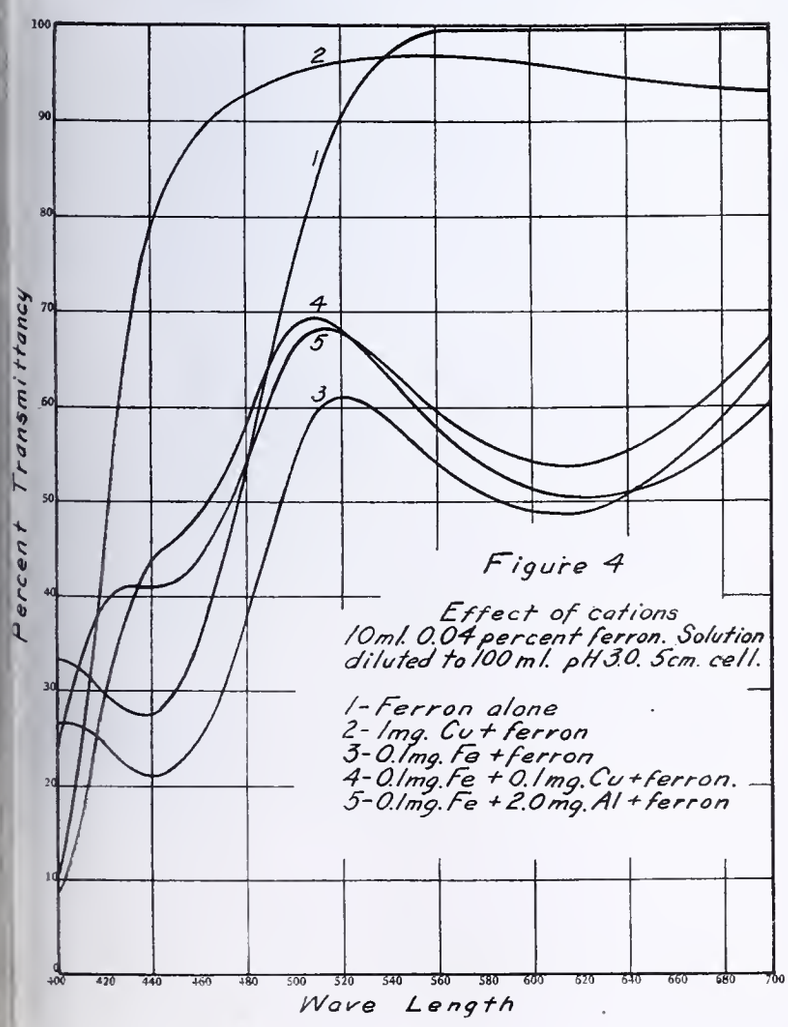

Literature Cited

(1) Britton, "Hydrogen Ions," p. 217, New York, D. Van Nostrand Co., 1932.
(2) Clark, "Determination of Hydrogen Ions," p. 200, Baltimore, Williams & Wilkins Co., 1928.
(3) Clark and Sieling, Ind. Eng. Chem., Anal. Ed., 8, 256 (1936).
(4) Hahn and Whipple, *Am. J. Med. Sci.*, **191**, 24 (1936).
(5) Michaelson and Liebhafsky, *Gen. Elec. Rev.*, 39, 445 (1936).
(6) Yoe, *J. Am. Chem. Soc.*, 54, 4139 (1932).
(7) Yoe and Hall, *Ibid.*, 59, 872 (1937).

Received April 23, 1937. Abstracted from a portion of a thesis submitted by H. W. Swank to the Graduate School of Purdue University in partial fulfillment of the requirements for the degree of Doctor of Philosophy.

Spectroscopic Determination of Metals in Small Samples

Calcium, Magnesium, Potassium, Manganese, Iron, and Phosphorus

D. T. EWING, MABEL F. WILSON, AND R. P. HIBBARD, Michigan State College, East Lansing, Mich.

THE spectrograph is particularly adapted to two types of analysis: (1) the determination of traces of metals in alloys and compounds when large samples are available, such as manganese in steel; (2) the analysis of samples when only very small amounts are available, such as biological ash. This article will be confined to the second type, and especially to the determination of calcium, magnesium, manganese, potassium, phosphorus, and iron in samples too small to be analyzed quickly by ordinary wet methods. Plant ash has been rapidly analyzed for these six elements when the total sample available was less than 10 mg.

The method employed is similar to that used by Nitchie (*2*), exposing the spectra of the samples between those of a series of standard solutions containing varying known amounts of the substance being determined. From the blackness of the spectral lines working curves were formulated according to the method of Twyman and Hitchen (*3*), and from these standard curves unknowns were directly determined.

Apparatus

A Bausch and Lomb quartz spectrograph having a dispersion varying from 7 Å. per mm. at 2500 Å. to 21 Å. per mm. at 3500 Å. was used in this investigation. Excitation of the samples was obtained by arcing graphite electrodes with direct current furnished by a 15-ampere 300-volt motor generator. A revolving sector was used to regulate the fraction of incident light reaching the slit. Line blackness (plate blackening) was determined by means of a Bausch and Lomb density comparator.

PREPARATION OF ELECTRODES. Acheson graphite rods 8 mm. (0.31 inch) in diameter were cut in convenient lengths for arcing. One end of each was drilled approximately 7 mm. deep, 0.1 ml. of the solution was placed in the crater, and the electrodes were dried at 110° C. and used as lower electrodes (the anode). The cathode consisted of similar lengths broken from the same rod. Special graphite rods very free of metallic impurities were used in the calcium determinations.

Preparation of Standards

SELECTION OF BASE MATERIAL. The first problem to be considered in the preparation of standards was the material for use as a base. This substance serves two purposes: as a "filler," giving a greater amount of solid substance in the electrode; and as a means of holding back most of the carbon spectra until volatilization of the sample is complete. More even exposures and lighter backgrounds were obtained by employing the proper base.

It is the authors' experience that the chlorides of the metals reported in these investigations give rise to sharper spectral lines of the metals than do other negative radicals. All determinations were carried out in hydrochloric acid solution, in which the samples were found to be readily soluble. In the search for a suitable matrix material many metallic chlorides were tried. Zinc chloride was found to vaporize too readily, lead chloride was too insoluble, and sodium chloride in large amounts caused the arc to flare giving very uneven exposures. Very satisfactory arcing conditions and even exposures resulted from the use of ammonium chloride, but the spectral lines of the substance desired for use in analysis were not sharp and clear.

Of the various mixtures of sodium and ammonium chlorides tried, the one consisting of 10 per cent sodium chlorid and 90 per cent ammonium chloride was found to give satis factory results both for arcing and sharpness of lines. Th base solution finally selected consists of 5 grams of sodiu chloride, 45 grams of ammonium chloride, and 4.5 gram of hydrochloric acid in 1 liter of solution.

TABLE I. CONDITIONS OF EXPOSURE

Substance	Exposure *Seconds*	Light, Sector Transmission %
Potassium		
In 9% acid	40	5
In NH-Na base	40	5
In Ca-Mg base	60	6.25
Iron and phosphorus		
In NH-Na base	60	5
In Ca-Mg base	90	6.25
Iron (alone)	60	2
Magnesium	40	3.125
Manganese	40	2
Calcium	40	1.625

CALCIUM STANDARDS. No two elements under identical arcin conditions gave the same variation in line blackness for an equa change in concentration. Thus it was necessary to try variou concentrations until a series of dilutions was obtained whic gave a gradation of line densities suitable for analysis.

Two grams of calcium as nitrate of a very high grade of purit were dissolved in 1 liter of a solution containing 5 grams of sodiu chloride and 45 grams of ammonium chloride. This stock solu tion was diluted with another stock solution containing the sam amount of sodium chloride and ammonium chloride, to give series of solutions of different calcium contents. One millilite of the resulting solutions contained 1.0, 0.5, 0.3, 0.2, 0.1, 0.075 0.05, 0.03, 0.02, 0.01, 0.005, and 0.0025 mg. of calcium.

MAGNESIUM STANDARDS. Magnesium solutions were pre pared in the same manner using magnesium chloride, giving final series containing 5.0, 2.5, 1.0, 0.5, 0.3, 0.25, 0.2, 0.1, 0.05 0.025, 0.01, and 0.005 mg. of magnesium per milliliter.

MANGANESE STANDARDS. Manganese chloride was dissolve in the base solution to yield 2 grams of manganese per liter Lower concentrations of 1.0, 0.5, 0.25, 0.1, 0.05, 0.025, 0.01, anc 0.005 mg. per ml. were prepared by diluting this manganese solu tion with the proper volume of base solution.

POTASSIUM STANDARDS. The behavior of potassium is differen from that of magnesium, manganese, and calcium. Larg amounts of potassium show a marked gradation of line densities Thus higher percentages may be successfully analyzed directl from the sample without employing a "filler" or dilution of samples.

Sufficient potassium chloride to yield 30 grams of potassiu per liter was dissolved in the sodium-ammonium chloride bas solution. Dilutions with the base were made giving a series containing 30, 25, 20, 17.5, 15, 12.5, 10, and 5 mg. of potassium pe ml. of solution.

PHOSPHORUS AND IRON STANDARDS. Iron in the form of ferrous ammonium sulfate and phosphorus as potassium acid phosphate were dissolved in the sodium-ammonium chloride bas solution. The iron concentration for this series was 1, 0.5, 0.25, 0.1, 0.05, 0.025, 0.01, 0.005, and 0.0025 mg. per ml. of solution. The phosphorus content was double that of iron.

Preparation of Samples

For the analysis of ash such as that from plant materials a 0.05-gram sample was treated with 1 ml. of concentrated hydrochloric acid and allowed to stand for an hour. To this solution a sufficient volume of the sodium-ammonium chloride solution was added to give a total volume of 10 ml.

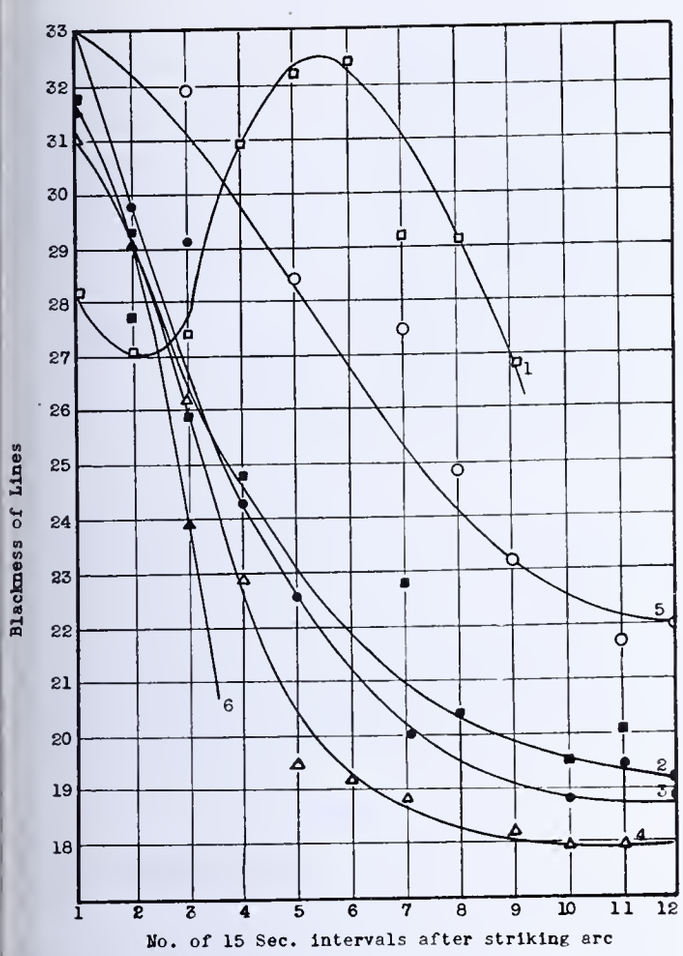

FIGURE 1. BEHAVIOR UPON VOLATILIZATION

1. Phosphorus, 2536.38 Å.
2. Magnesium, 2776.71 Å.
3. Iron, 3020.65 Å.
4. Manganese, 2576.12 Å.
5. Calcium, 3158.87 Å.
6. Potassium, 3447.38 Å.

Samples for potassium analysis were similarly prepared, except ıat they contained 0.200 mg. of ash per 10 ml. of solution.

A synthetic ash solution was prepared for check analysis by issolving the salts in a 4.5 per cent hydrochloric acid solution,) that the resulting concentrations were 0.7 gram of calcium, .4 gram of magnesium, 0.01 gram of manganese, 0.15 gram of hosphorus, 0.05 gram of iron, and 14 grams of potassium per liter.

Conditions of Exposure

Eastman "33" commercial plates were used for all analyses ex-ept those in which iron interfered with potassium. Wratten-Vainwright process panchromatic plates gave satisfactory re-ılts in this case. The "33" plates were chosen because their haracteristics were suitable for the particular conditions required ›r these analyses. Both types of plates were developed in East-ıan developer formula D-11 for 5 minutes at 18° C.

The method of "continuous exposure" extensively employed y this laboratory for some time was used to determine the be-avior of the six substances upon volatilization. The plate was laced in readiness for exposure, the slit was opened, and the lectrodes were adjusted. Each 15 seconds from the instant of rcing, the plate was moved rapidly to a new position, allowing ıe arc to burn continuously for 4 or 5 minutes. In this manner ıe comparative amounts of each substance volatilized in any 15-econd interval could be determined, as well as the time required ›r the volatilization of each to proceed to a point where no fur-ıer change in effect was shown on the photographic plate under he conditions of exposure employed.

From the data obtained on such a plate the time for ex-osure of each substance was found. Sufficient light was sed so that the heaviest lines employed for analysis were vell under maximum blackening. In this way a gradation f line densities was obtained for the lower concentrations. 'he percentage of light reaching the slit was regulated by he adjustable revolving sector. Table I shows the conditions of exposure used for each substance when a current of 10 amperes was carefully maintained.

Slight variations in time or percentage of light were made when only the higher or lower concentrations of a series were used.

Evaluation of Blackness of Spectral Lines

The blackness of the proper lines from the various analyses was read on the density comparator. Only plates free of fogging were used; any which were slightly fogged or not entirely clear were discarded. A reading for blackness when no light entered the slit was taken first. Each line was read independently until an accurate check was obtained, the plate was then moved to a clear background in the same region, and this reading was recorded as the "background." The differences between the blackness of the line and absolute blackness and between the background and absolute blackness were calculated. The ratios of these differences were plotted against the logarithms of concentrations to obtain the working curve or "standard curve," according to the method of Twyman and Hitchen (*3*). Each plate held a set of spectra of standards from which a working curve was formulated and the spectra of a number of unknowns which were evaluated from this curve. Duplicate plates were made to check results.

Continuous Exposure

The behavior of each of the six substances upon volatilization was characteristically different.

Potassium, although present in the largest amount, volatilized most rapidly and practically disappeared in 45 seconds.

Phosphorus also volatilized to such an extent that no effect could be observed on a photographic plate. It was unique in behavior, volatilization beginning slowly, gradually increasing to a maximum, and then slowly decreasing. About 2 minutes were required, although the bulk of it vaporized in 60 seconds, the time of exposure used for analysis.

Manganese volatilized very rapidly at first, most of it disappearing in 45 seconds. A faint trace remained for 45 to 60 seconds longer.

Magnesium did not volatilize completely. As in the case of manganese, 45 seconds were sufficient for the greater portion to burn out. After that time the amount volatilized in each interval gradually decreased and finally reached a constant.

Calcium acted somewhat like magnesium, except that it behaved very erratically when only a trace remained.

Iron was found to be the most persistent of any of the six substances under investigation. However, very consistent results were obtained when 60-second exposures were used.

Figure 1 shows graphically how the substances compare in speed of volatilization and in the amounts of each vola-

TABLE II. RESULTS OF SPECTROGRAPHIC ANALYSIS

Substance	Found Spectrographically *Mg./ml.*	Present in Solution *Mg./ml.*	Error %
Magnesium	0.400	0.400	0
	0.390	0.400	2.5
Manganese	0.0103	0.0100	3.0
	0.0099	0.0100	6.0
Phosphorus	0.148	0.150	1.3
	0.148	0.150	1.3
	0.153	0.150	2.0
Potassium	14.25	14.00	1.7
	13.00	14.00	6.7
	14.00	14.00	0
Iron	0.048	0.05	4.0
	0.052	0.05	6.0
Calcium	0.68	0.7	3.0
	0.68	0.7	3.0

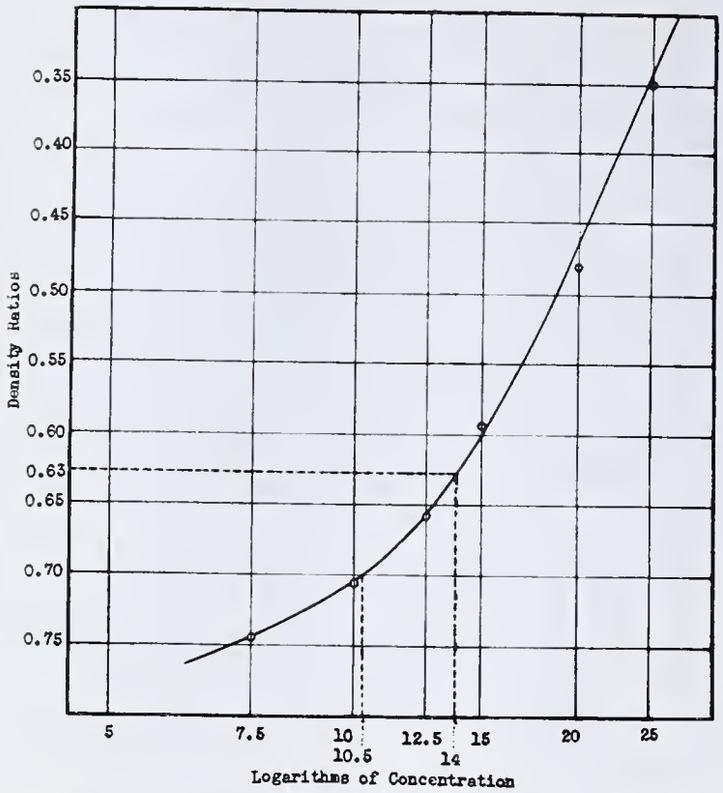

FIGURE 2. STANDARD CURVE FOR POTASSIUM, 3446.37 Å.

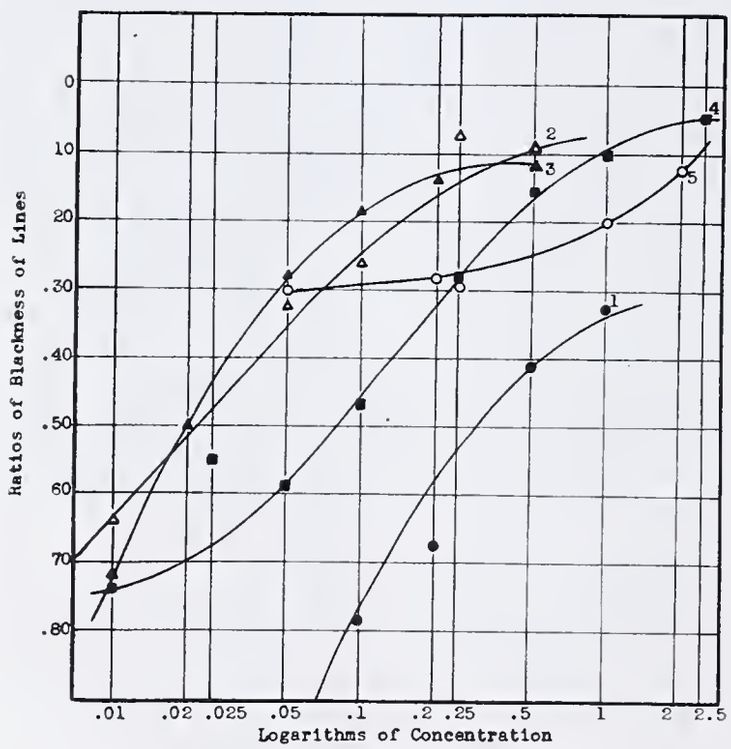

FIGURE 3. STANDARD CURVES

1. Phosphorus, 2536.38 Å.
2. Iron, 2599.40 Å.
3. Manganese, 2605.69 Å.
4. Magnesium, 2779.85 Å.

tilized in any time interval. Line blacknesses are plotted as ordinates against time intervals as abscissas. Potassium has the greatest slope; magnesium, manganese, and iron behave somewhat alike; calcium shows a slower rate of volatilization; and the erratic behavior of phosphorus is very evident.

Suitable Lines for Analysis

Very few *raies ultimes* are suitable for use in quantitative analysis using the method of arc excitation, as they show maximum blackening in comparatively low concentratio A line used effectively must show two characteristics: must be persistent even in very low concentrations, and must show a definite change in line density for a small chan in concentration. Lines which fulfill these requiremen give very satisfactory standard curves over a short range concentrations. Many lines of each substance were inv tigated and those selected were found to be most satisfa tory under the conditions of excitation and exposure e ployed. They are as follows:

Potassium, 3446.37 and 3447.38 Å.
Magnesium, 2776.71 and 2779.85 Å.
Calcium, 3158.87 and 3179.33 Å.
Iron, 2698.08 and 2599.40 Å.
Phosphorus, 2536.38 Å.
Manganese, 2567.12 and 2605.69 Å.

In special cases other lines had to be employed. In t case of high iron content, the calcium line at 3179.33 Å. w not satisfactory. For the same reason, the potassium lin mentioned above were unsatisfactory, and the potassiu line at 5782.6 Å. was employed, necessitating the use of pro ess panchromatic plates. For high concentrations of ir the doublet mentioned did not show satisfactory gradati and the unresolved doublet at 3021.08 and 3020.65 Å. w used.

Results

Figure 2 shows the standard curve for potassium plott from the data given in Table II, and the determination the concentrations of two unknowns.

Figure 3 gives typical standard curves for phosphoru iron, manganese, magnesium, and calcium, all plotted fro experimental data.

Table II gives the results of a spectrographic analysis of solution typical of that suitable for plant ash. One mill liter of this synthetic solution contains 0.400 mg. of magn sium, 0.010 mg. of manganese, 0.150 mg. of phosphoru 0.050 mg. of iron, 0.70 mg. of calcium, and 14 mg. of pota sium.

Figure 4 is taken from an analysis for phosphorus and iro The phosphorus line 2536.38 Å. and the iron doublet 2598.(and 2599.40 Å. are shown dotted. The gradations of bot lines are very apparent to the eye.

FIGURE 4. PHOSPHORUS AND IRON

Figure 5 shows two analy-s of a sample, one for ıgnesium and one for man-gnese. The magnesium oup of five lines in the ıgion of 2780 Å. and the ıanganese group of three les in the region of 2600 Å. e marked.

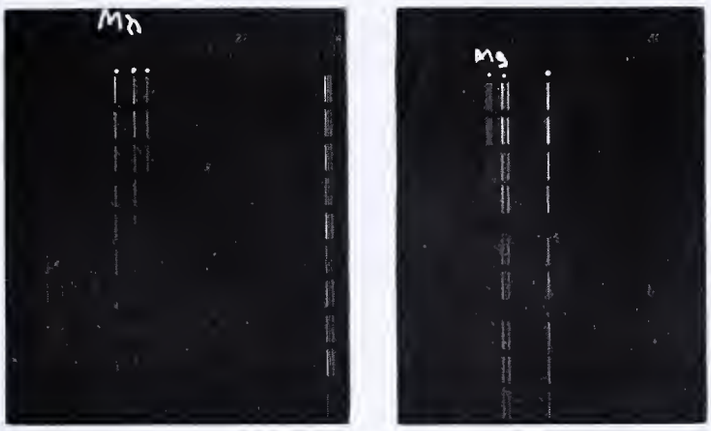

Figure 5. Manganese and Magnesium

Variation of Line Densities

Duffendack, Wylie, and vens (*1*) found that mag-ısium, calcium, sodium, and tassium affected the rela-e intensity of the spectral les of each of the other elements with regard to the spec-ıl intensity of an internal standard, and that the addition 2 per cent of sodium had the effect of eliminating further riations due to the other elements.

The effect of calcium, potassium, and sodium on the line ackness of magnesium was measured and found to be ll within the range of experimental error for the condi-ons of exposure employed. The addition of sodium chlo-le in the base material would also eliminate slight varia-ons due to small amounts of other substances.

No attempt was made to remove any substance from the h before analyzing for the six substances determined. As own by the graph resulting from a continuous exposure, all bstances were vaporized concurrently.

Phosphorus. The rate of volatilization of phosphorus ffered markedly from that of the other five elements. Slow first to volatilize, the rate would suddenly increase to a aximum and then gradually decrease. This behavior did t interfere with the accuracy of the determination (less an 2 per cent) when sufficient time was given to arcing the mple. The range within which phosphorus can be de-rmined is limited. No attempt to show it in less than 0.01 g. per ml. was made in this investigation. In cases where e phosphorus was not at first shown to be present, a con-ntration of the ash solution yielded a positive phosphorus termination. The solutions for phosphorus yielded a very tisfactory standard curve between the limits of 0.01 and mg. per ml., making determinations of unknowns with a gh degree of accuracy. There were no lines of any sub-ances used or impurities occurring in the region of the phos-ıorus line, 2536.38 Å., and no background to interfere. he line was easily read on the density comparator and gave smooth curve.

Iron. Iron had the advantage of having a number of lines hich showed a definite gradation of line blackness, yielding tisfactory standard curves. The unresolved doublet at 20.65 and 3020.08 Å. gave a workable curve for concen-ations of iron from 0.05 up to 20 mg. per ml. This doublet ould be more effective on an instrument with higher re-lving power. The pair at 2598.38 and 2599.40 Å. is the ost satisfactory over a long range. From a range of 2 mg. er ml. down to as low as 0.0005 mg. per ml., a standard ırve can be made, which has less change in density for a nall change in concentration than does the doublet at bout 3020 Å. When only iron is being determined, the oublet at 3020 Å. is to be preferred except in extremely low ncentrations. In conjunction with phosphorus, the pair 2598.38 and 2599.40 Å. was most extensively used. They ccur in a region clear of background, free of interfering lines, ıd are brought out satisfactorily under the same conditions sed for phosphorus. An accuracy of 4 to 6 per cent was ınd in the case of iron in a concentration of 0.05 mg. per ml.

Manganese. Two lines, 2576.12 and 2605.69 Å., give standard curves for manganese over a range of 0.001 to 5.0 mg. per ml. by varying the amount of light. In the case of any analyzed synthetic ash containing 0.01 mg. per ml. the error was estimated at 5 to 10 per cent. As the manganese was found to contain a small amount of iron, the error was not extreme. The curve for manganese was very smooth, giving both the shoulder and toe of the curve as well as the straight portion. Determinations of higher concentrations are more easily made, being on a straight part of the curve.

Magnesium. Magnesium was the easiest to analyze of the six elements. The curves obtained from the lines at 2776.71 and 2779.85 Å. more nearly resembled Hurter and Driffield curves than any of the others. Over the comparatively short range of 0.01 to 1.0 mg. per ml. a complete curve was obtained by proper exposure. Results on magnesium showed, also, the smallest percentage of error. In a group of five analyses, the average error was 3 per cent. Magnesium may be determined very satisfactorily in a range of 5.0 down to 0.001 mg. per ml. Its determination is probably the most accurate of the six analyses.

Potassium. Analysis of potassium in ash proved to be the most difficult. In the first place, the range of concentration is very limited. Gradation of line blackness may be obtained best between concentrations of 1.0 and 50 mg. per ml., and only with difficulty under 5 mg. per ml. The sample should be heavy in potassium to be accurately analyzed.

Iron in any concentration greater than 0.1 mg. per ml. interferes with the unresolved doublet at 3446.37 and 3447.38 Å., making the employment of these lines for analysis impossible. An attempt to lessen the time of exposure and use the pair at 4044.16 and 4047.22 Å. was only partially successful. Another line obtainable on special red-sensitive plates, 5782.6 Å., can be used between limits for approximations but its spectrogram possesses continuous background to be used for formulating a standard curve.

The standard curve obtained for potassium using 3447.38 Å. in a range of concentrations from 5 to 30 mg. per ml. is very easily obtained and satisfactory for concentrations within that range when iron is absent or present in an amount less than 0.05 mg. per ml. A spectrograph giving a greater resolution of the doublet, thus freeing it from interference by iron, would yield very satisfactory results.

Results obtained on four samples of potassium containing less than 0.05 gram of iron per liter, and known to contain 14 grams of potassium, gave 15.0, 14.25, 13.0, and 14.0 grams per liter, an average of about 5 per cent error.

Calcium. Calcium is present in an appreciable amount in most graphite rods ordinarily used for spectrographic analysis, and considerable care is needed to select electrodes sufficiently free of calcium.

A series of standard solutions gives a smooth curve for calcium with very little change in density for a large change in concentration. Thus the determination of unknowns is much less accurate for calcium than, for example, magnesium. Two lines of calcium were found to yield satisfactory standard curves: 3158.87 and 3179.33 Å. Between the concentrations of 0.001 and 5 mg. per ml., smooth standard curves were obtained and successful determinations made. However, the percentage error was higher for calcium than for magnesium,

manganese, iron, or phosphorus, particularly when the concentration of the unknown was very low.

Many analyses supplied by the Botanical Department (by R. P. H.) have been made by the procedure herein discussed and the results will be recorded in a forthcoming publication.

Summary

The employment of a base solution composed of 5 grams of sodium chloride, 4.5 grams of hydrochloric acid, and 45 grams of ammonium chloride per liter of solution as a solvent for calcium, magnesium, manganese, potassium, and phosphorus makes it possible to determine by use of the spectrograph the amounts of these elements present. The method is especially suitable for the analysis of plant ash materials when even a very limited amount of the substance is available. The conditions of arc excitation, exposure, etc., have been worked out to give the maximum gradation of density for particular spectral lines selected as most satisfactory f the analysis of each substance. Under these conditio certain limits of concentration were found to exist:

	Å.	Mg./ml.
Calcium	3158.87 and 3179.33	0.001 to 5
Potassium	3446.37 and 3447.38	1 to 50
Iron	2598.08 and 2599.40	0.0005 to 2
Magnesium	2776.71 and 2779.85	0.001 to 5
Manganese	2576.12 and 2605.69	0.001 to 5
Phosphorus	2536.38	0.01 to 10

Literature Cited

(1) Duffendack, Wylie, and Owens, Ind. Eng. Chem., Anal. Ed 7, 410–13 (1935).
(2) Nitchie, *Ibid.*, 1, 1–7 (1929).
(3) Twyman and Hitchen, *Proc. Roy. Soc.* (*London*) A133. (1931).

Received April 5, 1937. A portion of a Ph.D. thesis presented to t Graduate Faculty of the Michigan State College, June, 1937, by Mrs. Mab F. Wilson.

A Physical Method for Drying Liquefied Hydrocarbons

EDWIN E. ROPER
Laboratories of Physical Chemistry, Harvard University, Cambridge, Mass.

THE author had occasion to dry thoroughly certain low-boiling olefin and diene hydrocarbons; these substances had been highly purified by Kistiakowsky and collaborators (*3–6*) and showed, in general, boiling point ranges of the order of 0.01° C. (The samples had been stored at −80° C. and each time one was opened, water vapor from the atmosphere condensed to such an extent that not only was a saturated solution of water in hydrocarbon formed but excess ice was present.)

Not a great deal is known concerning the factors influencing polymer formation and isomeric shift for some of these compounds; we are here concerned with reactions that might possibly form products to the extent of even 0.1 per cent, the approximate upper limit of impurities present. Taking this into consideration, it was decided to use no chemical treatment in the drying process after the distillation. A physical method was devised which proved so efficacious that it merits description.

Distillation in a vacuum line from a temperature of −60° C. to a condensing tube maintained at −80° (or −188° C. in some cases) was first tried; however, the product from such a distillation always showed more or less turbidity at −80°, which disappeared as the liquid was warmed to 0° C. Moreover, such a vacuum distillation is slow and becomes worse in this respect as higher boiling compounds are distilled.

It was suspected that chilling, followed by visual examination of the liquid hydrocarbon, constituted a delicate test for the presence of water. To establish this, an experiment was performed by adding to 100 grams of crude, water-free 2-methylpropene (this sample showed no detectable trace of turbidity at −135° C.), 0.7 milligram of water contained in a very small capillary tube open at both ends. Shaking the 2-methylpropene tube at room temperature displaced part of the water in the capillary. Upon cooling the tube to −80° C. a distinct turbidity developed throughout the liquid, but no diminution could be noticed in the 0.7 milligram of water.

Apparatus

An apparatus was then arranged to filter the liquid hydr carbon under its own vapor pressure at low temperature Coffin and Maass (*1*) have described a somewhat similar ap paratus but used no filler in the filter tube; their method o forcing the liquid through the filter tube is open to objectio and they gave no data on the products. Hicks (*2*) has de scribed the use of vacuum-jacketed funnels containing a porou plate, but they would not be applicable to the present tas in the form shown. The essential details of the author's ap paratus are presented in Figure 1.

The bottom fifth of the filter tube, *D* (ca. 150-cc. capacity), i packed rather loosely with glass wool before the top tube is seale in place, providing an effective filter mat for the ice particle The hydrocarbon is condensed in *B* (ca. 150-cc. capacity) an freed from air, the complete line being evacuated at this time b means of a mercury diffusion pump. A bath of solid carbo dioxide in acetone (this bath must not be colder than the freezin point of the compound undergoing drying) is placed about filte tube *D*. The contents of tube *B* are then brought slowly t room temperature by judicious cooling of the contents at inte vals, so that evaporation takes place smoothly. This operatio causes liquefaction to take place in tube *D;* upon observing thi liquefaction, liquid air is placed about tube *F* (ca. 100-cc. capac ity) in which liquefaction and subsequent solidification (for mos substances) occur.

The resultant lowering in the vapor pressure in *F* and *J* give rise to a pressure differential on the liquid in the filter tube, th liquid is thereby forced over into container *F* via tube *E*, and steady flow of liquid is maintained, tube *E* becoming covered wit frost. This delivery tube could be vacuum-jacketed, but i would unduly complicate the apparatus. After this deliver tube has cooled, the liquid air may be removed from about *F* an the filling of the final container(s) started by immersing *J* in bath of solid carbon dioxide in acetone during the first two-third of the filtering. By not externally cooling *F* (it is internall cooled by the liquid dropping in) after the flow has once bee started, distillation takes place from *F* and *J;* however, durin the later stages of the filtration *J* must be immersed in a bath a a lower temperature than the one about *D*.

It is a good plan to attempt to empty D as rapidly as possible ward the end, for as soon as all the liquid has vaporized from liquid still remaining in D, there is no longer a pressure differential on the filter tube and the delivery to F practically ceases. hereafter, distillation from the very small surface through the ng, narrow (2.5-mm. bore) delivery tube is exceedingly slow d is not desirable.

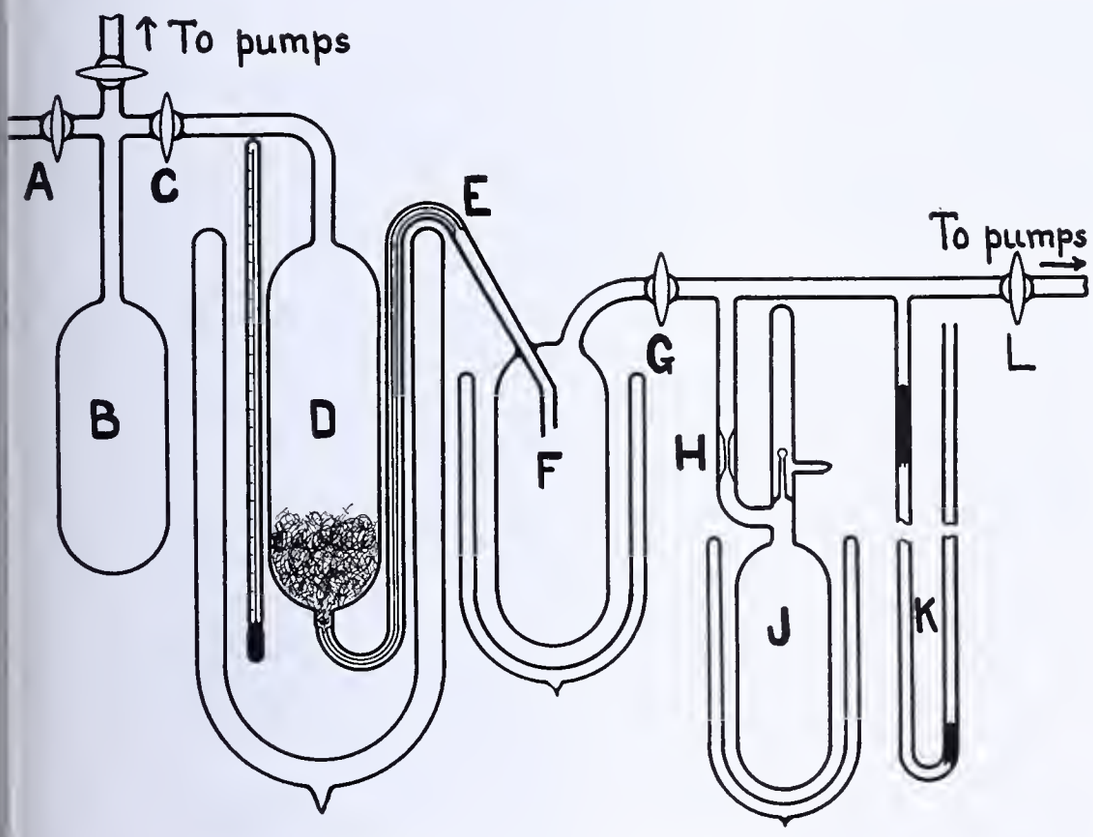

FIGURE 1. DIAGRAM OF APPARATUS

This means that at the end a small amount of liquid must be ft in D or else a slow stream of an inert gas (not necessarily dry) lmitted through cock A to force over the remnants. When the nal container is filled, liquid air is placed about tubes D, F, and cock L is opened to the pumps, and the container is sealed off he technic of sealing off under a vacuum is discussed by Scott, ook, and Brickwedde, (7) at constriction H under a vacuum. The containers, J, of the apparatus now in use are from 30- to 00-cc. capacity, varied according to the size of the sample to be tered. The average amount filtered by the author was 75 cc., though an apparatus has been used in which the filter tube was 50 cc. in size and 400-cc. samples were run through satisfactorily.

TABLE I. DATA ON COMPOUNDS

Compound[a]	Normal Boiling Point	Freezing Point	Filtration Temperature	Reference Number
	°C.	°C.	°C.	
ropadiene	−34.2	−136	−80	(6)
Methylpropene	− 7.0	−141	−135 to −130	(4, 8)
Butene	− 6.4	Glass	−80	(4, 8)
ns-2-Butene	+ 1.0	−106	−100 to −90	(4, 8)
s-2-Butene	3.7	−139	−135 to −130	(4, 8)
4-Pentadiene[b]	26.1	−148	−80	(6)
Methyl-2-butene	38.6	−134	−80	(5)

[a] All the substances listed were prepared by Professor Kistiakowsky and s collaborators, of these laboratories, for their study of the heats of hydrnation. For details of preparation, distillation, and some physical conants, see (3–6).

[b] This filtration was performed with the author's apparatus by W. R. ith of these laboratories.

Discussion

In three cases shown in Table I, filtration was conducted t a much lower temperature than −80° C. This is more of a ask, for baths must be prepared with the aid of liquid air, which will keep tube D at the proper temperature. Such good results were obtained at −80° C. that only in exceptional cases should it be necessary to go to lower temperatures.

In all cases, the product from the filtration showed no trace of turbidity at the temperature of filtration and when the products were examined visually at a lower temperature than that at which filtration was performed, the liquid hydrocarbons were absolutely clear. In view of the known low solubility of water in hydrocarbons at room temperature the author believes that the water content has been lowered to a negligible value.

From observations on the filtration of 2-methyl-2-butene, it would appear that liquids boiling above 50° C. would be difficult to filter in the manner described, since their vapor pressure at room temperature is not sufficiently high to give the proper pressure differential on the filter tube. This could be readily overcome by using a stream of inert gas to force over the liquid.

This type of filtration should be applicable to any liquid in which water does not dissolve to an appreciable extent. If the liquid has a relatively high freezing point, it may not be possible to free it from water as thoroughly as was done in the cases under consideration.

Summary

A method of filtering is described which is applicable to liquids at low temperatures. The essential features are the manner of constructing the filter tube, the filtration being conducted under the vapor pressure of the substance, and the utilization of the vapor pressure to force the liquid through the filter tube. The method is applied to seven hydrocarbons and it is demonstrated that the product from the filtration contains a negligibly small amount of water.

Acknowledgment

The author wishes to thank Professor Kistiakowsky for allowing him to participate in the preparation of some of these compounds and for gifts of others, and to thank Professor Lamb for facilities placed at his disposal.

Literature Cited

(1) Coffin and Maass, *J. Am. Chem. Soc.*, **50**, 1427 (1928).
(2) Hicks, *Bur. Standards J. Research*, **2**, 483 (1929).
(3) Kistiakowsky, Romeyn, Ruhoff, Smith, and Vaughan, *J. Am. Chem. Soc.*, **57**, 65 (1935).
(4) Kistiakowsky, Ruhoff, Smith, and Vaughan, *Ibid.*, **57**, 876 (1935).
(5) *Ibid.*, **58**, 137 (1936).
(6) *Ibid.*, **58**, 146 (1936).
(7) Scott, Cook, and Brickwedde, *Bur. Standards J. Research*, **7**, 938 (1931).
(8) Todd and Parks, *J. Am. Chem. Soc.*, **58**, 134 (1936).

RECEIVED July 2, 1937.

Determination of Coumarin in Vanilla Extract

By a Modification of the Steam-Distillation Method

IRA J. DUNCAN AND R. B. DUSTMAN
West Virginia Agricultural Experiment Station, Morgantown, W. Va.

IN 1934 the authors (*3*) proposed a method for the quantitative determination of coumarin in plant material, based upon the removal of coumarin by steam distillation under reduced pressure. In 1935 Clayton and Larmour (*2*) published a tentative colorimetric method for the determination of coumarin and melilotic acid in Melilotus species. This consisted in extracting the sweet clover material with 95 per cent alcohol and determining the coumarin and melilotic acid colorimetrically in aliquot portions of the extract. In 1936 Stevenson and Clayton (*5*) reported results obtained with sweet clover, extracting the samples with 50 per cent methyl alcohol instead of 95 per cent ethyl alcohol. The color is produced when solutions containing coumarin are treated with sodium carbonate and heated, and a solution of diazotized *p*-nitroaniline is added. The depth of color was shown to be in direct ratio to the amount of coumarin present. Roberts (*4*) modified Stevenson and Clayton's procedure by grinding the samples in a mortar with sand and extracting with 50 per cent methyl alcohol at room temperature.

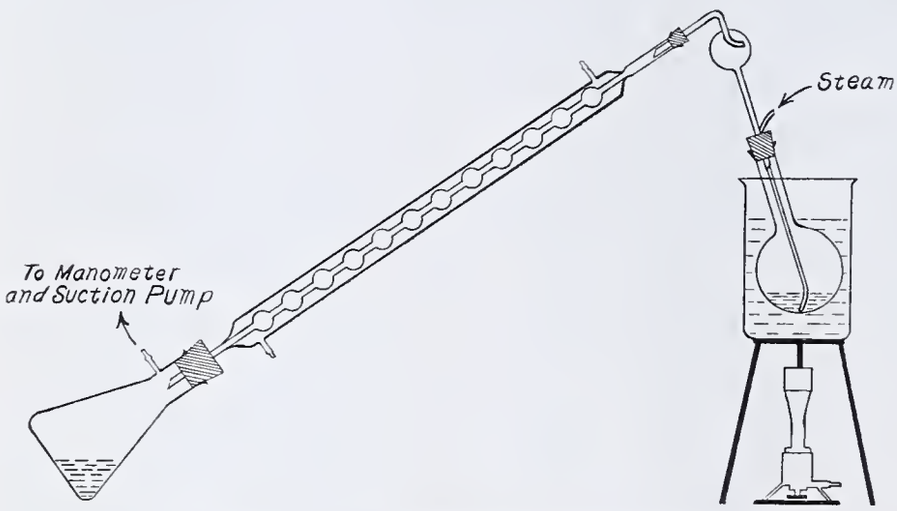

FIGURE 1. STEAM-DISTILLATION APPARATUS

The work done on the removal of coumarin from plant material by the steam-distillation method made probable its removal from vanilla extract by the same general procedure. Once separated from the vanilla extract, it was thought that coumarin in the distillate could be determined quantitatively by the colorimetric method. The results of this investigation are reported here.

Experimental

Preliminary trials indicated that coumarin can be removed from vanilla extract by the steam-distillation method; however, the possible interference of small amounts of vanillin which distill over along with the coumarin needed investigation. Tests showed that relatively concentrated solutions of vanillin react with the diazonium reagent and produce a red color similar to that given with dilute solutions of coumarin. Attempts were made to block the vanillin by adding a small amount of sulfuric acid or certain salts to the distillation flask and thus prevent it from distilling over. Among the substances tried were sulfuric acid, sodium acetate, copper sulfate, and potassium sulfate.

SOLUTIONS. The concentrations of sodium carbonate and of diazonium reagent used by Stevenson and Clayton and by Roberts were modified by the authors. The solutions used in the work reported in this paper were prepared as follows:

1. Two per cent sodium carbonate.
2. Diazonium solution: (*A*) *p*-nitroaniline hydrochloride (3.5 grams of *p*-nitroaniline dissolved in 45 ml. of concentrated hydrochloric acid, diluted to 500 ml. with distilled water, and filtered). (*B*) Sodium nitrite (5 grams dissolved in 100 ml. of distilled water. This solution should be kept away from light and renewed frequently. It will keep for a month or longer if placed in a refrigerator at 0° to 3° C.)

Stock solutions *A* and *B* were stored in an electric refrigerator at 0° to 3° C. Five milliliters of each solution were placed in a cold 100-ml. volumetric flask and kept in the refrigerator for at least 5 minutes. To this, 10 ml. of solution *B* were added, and the flask was shaken and returned to the refrigerator for 5 minutes more. The solution was then diluted to 100 ml. with ice-cold distilled water, shaken, and allowed to stand in the refrigerator for 15 minutes before using. The solution should be kept cold and should be renewed every 24 hours.

PROCEDURE. A sketch of the apparatus necessary for the steam distillation is shown in Figure 1.

Approximately 12.5 ml. of the vanilla extract together with 0.2 ml. of concentrated sulfuric acid or 0.5 gram of one of

TABLE I. RECOVERY OF COUMARIN FROM VANILLA EXTRACT[a]

(In the presence of sulfuric acid or certain salts by the steam-distillation procedure)

Reagent Used	Coumarin Added	Coumarin Recovered[b]	
	Gram	*Gram*	%
Sodium acetate, 0.5 gram	0.0300	0.0301	100.3
	0.0750	0.0742	98.9
	0.0750	0.0750	100.0
	0.0500	0.0498	99.6
	0.0500	0.0501	100.2
	0.0500	0.0502	100.4
	0.0500	0.0496	99.2
Concentrated sulfuric acid, 0.2 ml.	0.0279	0.0281	100.7
	0.0315	0.0308	97.8
	0.0459	0.0453	98.7
	0.0114	0.0115	100.9
	0.0273	0.0280	102.6
Potassium sulfate, 0.5 gram	0.0459	0.0457	99.6
	0.0250	0.0253	101.2
Copper sulfate, 0.5 gram	0.0140	0.0140	100.0
	0.0279	0.0281	100.7
		Mean	100.1

[a] Tincture No. 90, Vanilla, N. F., containing 40 per cent of alcohol, prepared by Eli Lilly and Co. This preparation is coumarin-free.

[b] To determine the precision of the method, 0.2500 gram of coumarin was weighed accurately and dissolved in 250 ml. of solution. Six aliquots of this solution (25.0, 25.1, 25.2, 25.3, 25.4, and 25.5 ml.) were measured from a precision buret and made up to 1-liter volume. Three 20-ml. aliquots were taken from each liter flask with a precision pipet and the color was developed according to the method described. This gave a total of 18 solutions. Precaution was taken to avoid psychological influence by withholding from the operator of the colorimeter knowledge of the concentration of the solutions being read and of the standard used for comparison. Ten readings were made on each solution and the mean was taken for calculation of the coumarin content. The triplicate values thus obtained then were averaged for comparison with the known values. The results were as follows:

Colorimetric reading, av.	20.24	20.13	20.11	20.03	19.98	20.02
Found, gram	0.0249	0.0250	0.0251	0.0252	0.0252	0.0252
Present, gram	0.0250	0.0251	0.0252	0.0253	0.0254	0.0255

he salts were placed in the 1-liter, long-necked, round-bottomed, Pyrex distillation flask. A definite amount of pure coumarin vas added and the volume was diluted to approximately 100 ml. vith distilled water. The flask was then fitted with a Kjeldahl listillation bulb and a steam inlet tube which extended almost o the bottom of the flask. The distilling flask was joined through he connecting bulb to a 63-cm. 12-bulb Allihn condenser and mmersed in a boiling water bath. A 4-liter Pyrex beaker served s a transparent bath through which the steam distillation was bserved and controlled. A 1-liter suction flask fitted to the ondenser collected the distillate. The entire system was conected to a water suction pump by rubber tubing attached to he side tube of the suction flask. A mercury manometer inerted in the line measured the pressure.

It is convenient to run the distillations in duplicate by attachng two sets of apparatus to the same suction pump and to the ame steam jet. A stream of dry steam was passed into the ask until the contents reached a vigorous boil and the distillate egan to drip from the condenser. The pressure was then reuced rapidly, but at such a rate as to prevent boiling over, unl the pressure in the system was 140 mm. of mercury. This was onveniently controlled by placing a screw clamp on a rubber ube which was connected to the system by means of a Y-tube.

The distillation was continued at this rate until the flask was ry, after which it was removed from the bath. An additional 00-ml. portion of water was added to the contents of the flask nd the distillation procedure was repeated, after which the ondenser was rinsed down into the receiving flask and the disllate transferred to a 1-liter volumetric flask. The flask was ade up to volume and 20-ml. aliquots of the distillate were ipetted into 50-ml. volumetric flasks. Five milliliters of 2 per ent sodium carbonate solution were added to each flask and e contents were heated in a boiling water bath for 5 to 10 inutes or, if more convenient, heated in a water bath at 80° C. r 15 minutes. The flasks were cooled to room temperature, 5 l. of cold diazonium solution were added, and the flasks were ade up to volume. A series of standards containing from 0001 to 0.001 gram of coumarin was prepared at the same time nd in the same way as the unknown solutions. Color comparions were made in a colorimeter after standing for 15 minutes.

The recovery of coumarin added to vanilla extract in a eries of trials by the procedure just described is given in 'able I.

These data show that coumarin present in varying amount an be recovered quantitatively from vanilla extract by the team-distillation procedure when a small amount of sulfuric cid, sodium acetate, potassium sulfate, or copper sulfate added to the sample in the distillation flask. Some odor f vanillin could be detected in the distillates, but it was not sufficient concentration to interfere. After the distillates ad stood for 24 to 48 hours those distilled from sodium cetate and from copper sulfate gave somewhat higher reilts. Just what caused these higher values was not apparnt, but it was thought that the small amount of vanillin or erhaps some other constituent which distilled over changed some manner so that it reacted with the diazonium soluon on long standing, thus giving solutions of higher color. ther trials in which zinc sulfate and potassium acid sulfate ere used gave distillates which reacted like those just deribed, but the distillates from sulfuric acid or from potasum sulfate remained unchanged for periods up to 48 to 72 urs. These distillates were not tested over longer periods time.

It was concluded, therefore, that either sulfuric acid or otassium sulfate might be used in so far as theoretical reovery of coumarin is concerned. However, because the ilfuric acid caused considerable charring of the organic aterial in the extract when the flasks were distilled to dryess, the flasks were rather difficult to clean after the disllation was completed, and for this reason potassium sulte was preferred.

The next points to be considered were the effects of using her preparations of vanilla extract and of increasing the anillin content. For this work two additional coumarinee high-grade extracts were obtained (a Parke-Davis prepation containing 30 per cent of alcohol and a sample of bulk material used by the University of West Virginia Dairy Department). In these trials varying amounts of coumarin and vanillin and 0.5 gram of potassium sulfate were added to 12.5-ml. portions of the extract. The results of the trials are given in Table II, and show that coumarin added to each of the three vanilla extracts was recovered quantitatively by the steam-distillation procedure. Samples reinforced with relatively large amounts of vanillin behaved like those to which no vanillin was added.

Table II. Recovery of Coumarin Added to Vanilla Extracts[a]

(With and without added vanillin)

Vanilla Extract Used	Vanillin Added	Coumarin Added	Coumarin Recovered	
	Gram	*Gram*	*Gram*	%
Parke-Davis	None	0.0250	0.0251	100.4
	None	0.0250	0.0251	100.4
	0.25	0.0250	0.0247	98.8
	0.25	0.0250	0.0250	100.0
W. Va. Univ. Dairy	None	0.0250	0.0250	100.0
	None	0.0250	0.0250	100.0
	0.25	0.0250	0.0250	100.0
	0.25	0.0250	0.0249	99.6
Eli Lilly	None	0.0459	0.0457	99.6
	0.25	0.0250	0.0248	99.2
	0.25	0.0250	0.0253	101.2
			Mean	99.9

[a] Blank determinations for coumarin were made on all three extracts. All were found to be free from the characteristic color produced when coumarin is present.

Table III. Recovery of Coumarin Added to 50-Ml. Samples of Vanilla Extract

(Official method)

Sample No.	Coumarin Added	Coumarin Recovered	
	Gram	*Gram*	%
1	0.0750	0.0678	90.4
2	0.1000	0.0952	95.2
3	0.1125	0.1064	94.6
4	0.1500	0.1336	89.1
		Mean	92.3

Table IV. Determination of Loss of Coumarin Added to Vanilla Extract during Evaporation Process

Sample No.	Coumarin Added	Coumarin Recovered	
	Gram	*Gram*	%
1	0.1000	0.0949	94.9
2	0.1500	0.1409	93.9
		Mean	94.4

The final point to be considered was a comparison of the steam-distillation method with the official method (*1*) for the determination of coumarin in vanilla extract. The Parke-Davis extract to which a definite amount of coumarin was added was used in these trials. The results are given in Table III, and show that the authors did not recover quantitatively the coumarin added to vanilla extract. It is probable that with practice, somewhat greater recovery might be obtained.

It was thought that much of the coumarin loss might have taken place during evaporation of the alcohol, most of which occurred at a bath temperature of 66° to 68°; at no time did this exceed 70° C. In order to determine whether loss does occur during evaporation, 50-ml. samples of vanilla extract, to which a known amount of coumarin was added, were evaporated as described in the official method. The samples were then diluted to 100-ml. volumes and the coumarin was determined in aliquot portions by the steam-distillation procedure. Table IV shows that there is an appreciable loss of coumarin during evaporation of the alcohol. This probably accounts, to a great extent, for the low values obtained by the official method as reported in Table III.

Discussion

The data presented in this paper were obtained on the determination of coumarin added to three different samples of pure vanilla extract. Since the coumarin was recovered quantitatively even when the samples were reinforced with considerable quantities of pure vanillin, the method presumably can be applied to the determination of coumarin in factitious vanilla extracts with equally good results. While two distillations are required for the complete removal of coumarin from 10- or 12.5-ml. samples, approximately 95 per cent is removed by the first distillation. Twenty-milliliter samples may require three distillations for the complete removal of coumarin. Table V shows the amounts recovered by an increasing number of distillations.

The authors found that by using more sodium carbonate and more *p*-nitroaniline than Stevenson and Clayton used in developing the color, the solutions come to equilibrium in a shorter time.

The color intensity produced with 5 ml. of 1.1 per cent sodium carbonate and 5 ml. of diazonium reagent, prepared according to Stevenson and Clayton, were compared to the intensity given with 5 ml. of 2 per cent sodium carbonate and 5 ml. of diazonium reagent prepared according to the authors. A constant quantity of coumarin (0.5 mg.) was used in each trial by measuring 5 ml. of solution from a 50-ml. precision buret. Each solution was compared with a standard containing 0.5 mg. of coumarin, and prepared according to the authors' modification. Readings were made at the end of 10 minutes, 30 minutes, and 1, 2, 4, 22, and 48 hours. Each series of readings was compared with a new standard freshly prepared and allowed to stand for 2 hours before using.

Table V. Recovery of Coumarin with Successive Distillations

Sample No.	Volume of Extract	Coumarin Added	Coumarin Recovered: One distillation	Two distillations	Three distillations
	Ml.	*Gram*	%	%	%
1	12.5	0.030	95.4	100.0	...
2	12.5	0.030	94.8	100.4	...
3	12.5	0.030	95.4	100.4	...
4	12.5	0.030	93.6	99.8	...
5	12.5	0.030	95.3	98.4	...
		Mean	94.9	99.8	
6	20.0	0.075	...	99.0	99.5
7	20.0	0.075	...	99.9	100.1
8	20.0	0.075	...	96.5	100.3
9	20.0	0.075	...	98.1	99.3
			Mean	98.4	99.8

Table VI gives the results obtained, calculated to weight of coumarin found, and shows that the color intensity of the solutions prepared by the authors' modification of the Stevenson and Clayton method reached a constant value after standing for 2 hours, and remained constant for 20 hours. The solutions changed only very slightly after they had stood for 1 hour. The color intensity of the solution prepared by the Stevenson and Clayton procedure was not entirely constant after standing for 4 hours, but increased appreciably up to 22 hours. In both cases off-shades developed when the solutions had stood for a period of 48 hours, thus making accurate comparisons in a colorimeter difficult. In other trials not reported in Table VI it was shown that the color intensity of the standards and unknown solutions changes at the same rate. Therefore, when the standards and unknowns are prepared at the same time, color comparisons may be made any time after 10 or 15 minutes up to 22 hours. In case it is desired to determine the coumarin in a large number of samples over a period of several hours using only one set of standards, both the unknown solutions and the standards should stand for 2 hours before comparisons are made.

Color comparisons can be made accurately in the range of 0.1 to 1.0 mg. of coumarin in a 50-ml. volume. By dilution

Table VI. Coumarin Content at Successive Intervals

Determined by color intensity produced by 0.5 mg. of coumarin with different amounts of alkali and diazonium reagent

Method	Sample No.	Read After: 10 min.	30 min.	1 hr.	2 hr.	4 hr.	22 hr.	48 hr
		Mg.	*Mg.*	*Mg.*	*Mg.*	*Mg.*	*Mg.*	*Mg.*
Stevenson and Clayton	1	0.415	0.420	0.444	0.459	0.471	0.483	[a]
	2	0.427	0.426	0.444	0.457	0.471	0.482	[a]
	3	0.435	0.439	0.456	0.459	0.471	0.482	[a]
	Mean	0.426	0.428	0.448	0.458	0.471	0.482	
Authors	4	0.471	0.476	0.496	0.499	0.499	0.497	[a]
	5	0.475	0.476	0.496	0.500	0.498	0.501	[a]
	6	0.468	0.476	0.495	0.498	0.500	0.501	[a]
	Mean	0.471	0.476	0.496	0.499	0.499	0.500	

[a] Field difficult to match.

and choice of the size of aliquots used, concentrated coumarin solutions can be brought within this range. If an extract contains only a small amount of coumarin, it is desirable to use a larger sample or to dilute the distillate to 500 ml. rather than to 1 liter.

Summary and Conclusions

The steam-distillation method for the determination of coumarin in plant material can be utilized for the quantitative removal of coumarin from vanilla extracts in which it is contained. The addition of 0.5 gram of potassium sulfate to the sample prevents the interference of vanillin. Two distillations are necessary for the complete removal of coumarin from a 10- or 12.5-ml. sample. Coumarin in the distillate is determined colorimetrically by a modification of the Stevenson and Clayton method, involving a coupling reaction with *p*-nitroaniline after previous treatment with sodium carbonate and heating.

By a combination of these two procedures in a large number of trials in which coumarin was added to pure vanilla extract, the coumarin was recovered quantitatively with a maximum error of 2.6 per cent. In most cases the recovery was within 1 per cent of the true value. It is concluded, therefore, that coumarin can be determined quantitatively in factitious or adulterated extracts of vanilla by this method. In the opinion of the authors, the steam-distillation method has an advantage over the official method in both speed and accuracy, and the apparatus required is simple and easily manipulated.

Literature Cited

(1) Assoc. Official Agr. Chem., Official and Tentative Methods of Analysis, 2nd ed., p. 349 (1925).

(2) Clayton, J. S., and Larmour, R. K., *Can. J. Research*, C13, 89-100 (1935).

(3) Duncan, I. J., and Dustman, R. B., Ind. Eng. Chem., Anal. Ed. 6, 210–13 (1934).

(4) Roberts, W. L., unpublished method, Dept. of Agr. Chem. Univ. of Wis.

(5) Stevenson, T. M., and Clayton, J. S., *Can. J. Research*, C14 153–65 (1936).

Received April 30, 1937. Published with the approval of the Director of the West Virginia Agricultural Experiment Station as Scientific Paper 187

Correction. In the footnotes to Table I in my article on "The Principle of the Suspended Level" [Ind. Eng. Chem., Anal. Ed. 9, 85 (1937)] a typographical error should be corrected. The reference letters *a* and *b* have been interchanged and hence the magnitude of the possible error of the correction figures is wrongly stated.

The corrections marked *a* in the table are accurate within 0.1 per cent and those marked *b*, within 0.2 per cent. This difference becomes significant in precise measurement of viscosity.

Leo Ubbelohde

A Wood's Metal Reductor

G. FREDERICK SMITH AND C. S. WILCOX, University of Illinois, Urbana, Ill.

THE most frequently used metal reductor is the amalgamated zinc of the familiar Jones reductor, the preparation and use of which are discussed in many textbooks of analytical chemistry. A sulfuric acid solution of the material being reduced is preferred for use with this reductor. The Walden silver reductor is used in a manner almost identical to that of the Jones reductor, the silver being prepared in a spongelike state of aggregation (*4*). A solution of the material being reduced in hydrochloric acid is employed when using the silver reductor. Instead of granular amalgamated zinc, as in the Jones reductor, an amalgamated zinc wire spiral as described by Smith and Rich (*3*), is often used as a convenient substitute. Liquid amalgams were first employed as reductors by Nakazono (*2*), who used a 3 per cent liquid zinc amalgam as a substitute for the Jones reductor. This work was extended to the additional use of lead, bismuth, and cadmium liquid amalgams by Someya whose work is summarized by Hillebrand and Lundell (*1*). Other metal reductors such as aluminum wire or foil, have been employed but are not entirely satisfactory because of the presence of iron as an impurity or for other reasons. The elements commonly reduced for quantitative determination by the various metal reductors are iron, titanium, chromium, molybdenum, vanadium, and uranium.

Wood's metal is an alloy of bismuth, lead, tin, and cadmium. The alloy containing 50, 25, 12.5, and 12.5 per cent, respectively, of these constituents has a specific gravity of 9.7 and a melting point of 65.5° C. If fused Wood's metal, like mercury, has a high hydrogen overvoltage to prevent its rapid solution in dilute acid, as a metal reductor it should be comparable to the liquid amalgams of Someya (*1*). The present paper describes the practical application of Wood's metal as a reductor.

General Considerations

The most obvious advantage in the use of Wood's metal as compared to liquid amalgam reductors is in the removal of molten alloy when the reduction is complete; the cooled and solidified reductor metal is removed mechanically.

Wood's metal requires little attention and a number of determinations can be made simultaneously. It is easily available and requires no pretreatment. Hydrochloric acid solutions can be used and determinations of iron in the presence of titanium made by limiting the concentration of acid. Unlike liquid amalgam reductors it requires no special apparatus.

Wood's metal would not be expected to be more specific than the processes previously mentioned. A second disadvantage is that a minimum of metal surface is available for reactivity, and reduction is somewhat slow.

Procedure for Determination of Iron

A known volume of standard ferric chloride in hydrochloric acid was transferred to a 400-ml. beaker and diluted to 100 ml. with hydrochloric acid, the concentration of which was varied between 1.5 and 5 per cent by volume of the concentrated acid. Eighteen to 20 grams of Wood's metal were added, and the beakers were covered and boiled gently for 0.5 hour on an electric hot plate. At the end of this time the reduction was complete and the beakers were transferred to a cold-water bath and a 15-cm. (6-inch) length of fairly heavy platinum wire was placed in the molten alloy to withdraw it after solidification. The reduced solutions were further cooled by adding 100 ml. of cold water, and the solidified Wood's metal was withdrawn and washed, using a stream from the wash bottle. Twenty milliliters of dilute (1 to 1) sulfuric acid were added and the iron was determined by titration with standard ceric sulfate, using ferroin as indicator. The solution of ferric chloride in *N* hydrochloric acid was standardized, using a Walden silver reductor, followed by titration with standard ceric sulfate exactly as in the former analyses. The ceric sulfate was standardized in the usual way by comparison with pure sodium oxalate. The ferric chloride solution was found by the average from five closely agreeing results to contain 0.004296 gram of iron per ml. A series of results from this procedure is given in Table I.

TABLE I. DETERMINATION OF IRON

(After 30 minutes' reduction with Wood's metal in hydrochloric acid at approximately 100° C.)

Iron Taken	Volume of Concd. HCl	Reduction Loss in Weight	0.03548 *N* $Ce(SO_4)_2$	Iron Found	Error in Iron Determination
Gram	*Ml./100 ml.*	*Gram*	*Ml.*	*Gram*	*Mg.*
0.0429(7)	1.5	0.040	21.70	0.0430	0.0
0.0429(7)	1.5	0.025	21.70	0.0430	0.0
0.1074(2)	5.0	0.114	54.18	0.1073	−0.1
0.1074(2)	5.0	0.147	54.20	0.1074	0.0
0.0429(7)	1.5	0.049	21.68	0.0430	0.0
0.1074(2)	2.5	0.125	54.18	0.1073	−0.1
0.1074(2)	2.5	0.123	54.19	0.1073	−0.1

A series of samples of Norrie iron ore, known to contain 66.65 per cent of iron, was taken into solution in the usual manner with recovery of the iron from the insoluble matter. The solution of the ore in dilute hydrochloric acid was reduced under conditions comparable to those shown in Table I. The average of six consecutive analyses gave 66.58 per cent of iron. The maximum deviation from the average result was less than 2 parts in 1000. It was also found that iron could be quantitatively determined, using Wood's metal as reductor, in solutions containing 5 per cent by volume of 70 per cent perchloric acid or 5 per cent by volume of concentrated sulfuric acid.

Determination of Iron in Presence of Titanium

A solution of titanium sulfate in 3 *M* sulfuric acid was standardized, using a Jones reductor, followed by titration with a solution of ferric chloride using potassium thiocyanate as indicator. The reduced titanium solutions were kept out of contact with air by use of a stream of carbon dioxide gas. As the average of three determinations, 25.00 ml. of the titanium solution required 10.70 ml. of the ferric chloride. The same solution of titanic sulfate in dilute sulfuric acid (25.00 ml. plus 10 ml. of 1 to 1 sulfuric acid plus 15 ml. of water) was now allowed to react at the boiling point in contact with Wood's metal and in an atmosphere of carbon dioxide for 45 and 60 minutes. The reduction was 73.3 per cent complete at 45 minutes and 92.5 per cent complete at 60 minutes.

Because of the incomplete reaction in the time allowed and the necessity of a carbon dioxide atmosphere, attempts to determine titanium quantitatively were abandoned. Reduction of titanium in hydrochloric acid solution was not found to improve conditions materially.

An approximately 0.1 *N* solution of ferric iron was standardized, using a Walden silver reductor followed by titration with standard ceric sulfate. To known amounts of this solution 10 ml. of the titanium sulfate solution described above were added. The resulting solutions were diluted to 50 ml. and boiled gently in air for 30 minutes after addition of Wood's metal. Otherwise, conditions were the same as those described in Table I, except that after cooling, diluting, and removing the Wood's metal a slow stream of air was passed through the solution for 5 minutes. The color of the solutions did not indicate the reduction of appreciable amounts of titanium.

The results are given in Table II, which shows that in low concentrations of free acid (sulfuric or hydrochloric) iron in the presence of titanium may be determined if the practically

negligible amount of titanium reduced is reoxidized, using a slow stream of air prior to titration of iron. Experiments similar to those of Table II show that iron can be determined in the presence of vanadium by the same technic. Any vanadium reduced to the vanadous form is reoxidized by the passage of an air stream for 5 minutes, using a drop of copper sulfate solution as catalyst. The solution of vanadyl and ferrous ions is made 5 *M* in sulfuric acid and the iron alone is oxidized by ceric sulfate, using ferroin as indicator.

Table II. Determination of Iron

(In the presence of titanium, using Wood's metal reductor)

Iron Present	0.03548 *N* $Ce(SO_4)_2$ Required	Iron Found	Difference
Gram	*Ml.*	*Gram*	*Mg.*
0.0558	28.18[a]	....	....
0.0558	28.30[b]	0.0561	+0.3
0.0558	28.16	0.0557(8)	−0.02
0.0558	28.20	0.0558(2)	+0.02
0.0558	28.15	0.0557(7)	−0.03
0.0558	28.18	0.0558	0.0
0.0558	28.15	0.0557(7)	−0.03
0.0558	28.16	0.0557(8)	−0.02

[a] Blank determination to evaluate iron solution using the silver reductor and $Ce(SO_4)_2$.
[b] No stream of air used after reduction and before titration of iron.

Besides reducing titanium and vanadium to titanous and vanadous ions, molybdenum is reduced to the trivalent condition and tungsten in phosphoric acid solution to the blue form. Hexavalent chromium in sulfuric acid solution i reduced to the trivalent form but not appreciably to th chromous ion. These determinations were not studied be cause of the slow reduction rate and the influence of atmos pheric oxidation.

Summary

Fused Wood's metal was found to have properties simila to those of bismuth, cadmium, and lead liquid amalgam when in contact with dilute sulfuric, hydrochloric, or per chloric acid solution containing iron.

A Wood's metal reductor is more conveniently employe than liquid amalgams, as the excess of fused reductor meta can be removed more readily by allowing it to solidify, an no special equipment is required.

The new reductor was found to give accurate results i the quantitative determination of iron in iron ore. The in fluence of titanium or vanadium was offset by using air oxi dation to remove titanous and vanadous ions.

Literature Cited

(1) Hillebrand and Lundell, "Applied Inorganic Analysis," p. 103 New York, John Wiley & Sons, 1929.
(2) Nakazono, *J. Chem. Soc.* (Japan), **42**, 526, 761 (1921).
(3) Smith and Rich, *J. Chem. Education*, **1**, 2948 (1930).
(4) Walden, Hammett, and Edmonds, *J. Am. Chem. Soc.*, **56**, 35 (1934).

Received July 19, 1937.

Determination of Gold and Platinum and Detection of Platinum Metals

S. O. THOMPSON, F. E. BEAMISH, AND M. SCOTT
University of Toronto, Toronto, Ontario, Canada

Among the numerous organic chemicals that have been employed successfully for the quantitative precipitation of palladium, dimethylglyoxime has probably been the most widely used. A single precipitation of palladium with dimethylglyoxime made in the presence of platinum is usually found to be contaminated with platinum. This may be partly due to occlusion by the flocculent yellow precipitate, but under certain conditions the high results are due in part at least to the formation of a platinum organic combination.

Cooper (*1*) discussed this contamination and described the material formed with platinum and dimethylglyoxime. He suggested its use for the quantitative precipitation of platinum, stating that the precipitate may be collected and dried in a Gooch crucible for weighing as $Pt{\cdot}C_8H_{14}N_4O_4$, but gave no data either to prove the elementary composition of the precipitate or to indicate that precipitation is complete. The crystals form readily from hot dilute acid solution, are easily filtered and washed, and it seemed worth while to determine their platinum factor and whether or not this method could be used efficiently for quantitative analysis.

A slightly acid solution of platinum chloride and dimethylglyoxime was heated on the steam bath for about 10 hours, then filtered and washed with water until no foreign substance appeared on microscopical examination. The material was then dried in an oven at 140° C. Cooper (*1*) stated that the crystals decompose somewhat violently on direct ignition. The authors attempted to burn the material by slow ignition, but the combustion took place suddenly with the emission of much carbon, and the results were extremely low, indicating loss of platinum. According to the procedure finally adopted the weighed sample of crystals was fumed with sulfuric aci and fuming nitric acid to remove organic matter. Most of th platinum settled out after this treatment but a small amoun was dissolved. The solution was neutralized to pH_6 and th platinum precipitated with sodium formate. The metal wa filtered by means of a 3-cc. filtering crucible and washed wit 1 per cent ammonium chloride solution. A blank was de termined and weighed 0.029 mg. The results obtained ar given in Table I.

Table I. Platinum in Crystals Formed with Platinic Chloride and Dimethylglyoxime

Sample Used	Platinum Obtained	
Mg.	*Mg.*	%
51.02	23.37	45.81
58.15	26.60	45.74
49.09	22.47	45.77
46.15	21.16	45.85

The calculated percentage of platinum in $Pt{\cdot}C_8H_{14}N_4O_4$ i 45.88.

Precipitation of Platinum by Dimethylglyoxime

A solution of platinum was made up from the spectrograph cally pure metal and by analysis with formic acid was found t contain 33.00 mg. of platinum per 25.00 cc. Then 25.00-c portions of this solution were made up to 50 cc. with water, an 0.01 cc. of hydrochloric acid and 200 mg. of dimethylglyoxime i alcoholic solution were added. The liquid was heated on a stea

h for 5 hours, filtered cold through 7-cm. No. 42 Whatman er paper, and the precipitate was washed with only 5 cc. of d water.

Two series of tests were made on the filtrates. In one the al filtrate was evaporated, the organic matter removed with furic and nitric acids, and the platinum determined with ium formate. The results obtained were 0.506, 0.596, and 04 mg. of platinum. In the second series the total filtrate of cc. was evaporated to about 5 cc. and a second filtration made. e platinum was precipitated from this filtrate and weighed 25 and 0.132 mg.

Precipitations made from 1.2 *N* acid solutions indicate that ess of acid interferes to a still greater degree with the pre itation. Cooper (*1*) suggested the use of sodium formate reduce the platinum to a bivalent condition; the authors d not find that the use of sodium formate increased the com teness or the rapidity of the precipitation. Although the ults obtained indicate that, under the conditions stated ove, the precipitation of platinum by dimethylglyoxime is complete, nevertheless on many occasions the authors ve found this method of very considerable value for the aration of platinum from rhodium, iridium, and base tals such as iron, copper, etc.

Precipitation of Gold by Dimethylglyoxime

It has generally been accepted that the presence of gold in feres with the precipitation of palladium by dimethylgly me. Wunder and Thuringer (*7*) stated that this reagent cipitates gold completely, but gave no facts to substantiate s statement and described no procedure.

A solution of spectrographically pure gold was analyzed by ans of hydroquinone. Four samples were measured contain , respectively, 24.92, 24.92, 10.01, and 10.01 mg. of gold. The ution was made up to 50 cc. and acidified with about 0.5 cc. of centrated hydrochloric acid, 100 mg. of dimethylglyoxime in oholic solution (1 per cent) were added, and the yellow pre itate was allowed to form. The mixture was then boiled for minutes and the precipitated gold filtered by means of a filter ; crucible and washed with water. Finally the residue was rned and weighed as gold. The results obtained were 24.90, 87, 9.99, and 9.99 mg. of gold.

Detection of Platinum Metals

While developing procedures for the analysis of platinum tals and gold, the authors were constantly faced with the cessity of determining the presence or absence of each of e above metals, silver, and certain base metals when many all were present together. A very large number of reason ly specific tests for palladium and gold have been recorded the scientific literature but there are very few tests of any d for rhodium and iridium. Many chemicals will give ts for platinum, but most of these are by no means specific. hitmore and Schneider (*6*) have developed a considerable riety of crystallographic tests for each of the platinum tals, but in many cases it is difficult to produce crystals m 0.1 or 0.2 cc., which contain as little as 0.01 mg. of the tal ion. The tests listed below have been thoroughly in stigated and are recommended as fairly reliable in experi ced hands.

Platinum. Stannous chloride, 40 per cent by weight in drochloric acid of specific gravity 1.19, gives an orange or llow color with solutions containing platinum, a faint yellow lor being obtained if the solution contains 0.01 mg. of platinum r cc. Palladium and gold produce interfering colors and must st be removed. Silver, of course, will yield the chloride.

A test for platinum, by means of thallium nitrate and stannous loride, has been described by Tananaev and Dolgov (*5*). With ot paper 0.1 mg. of platinum per cc. of solution can be detected th assurance. Although this test is not very sensitive, small quantities of gold, palladium, iridium, and rhodium do not interfere.

If a drop of 10 per cent potassium iodide solution is added to a hydrochloric acid solution of platinum, a red-brown color is produced. A definite test can be secured with 0.002 mg. of platinum per cc., but this test is not specific, as traces of palladium, gold, and many base metals produce interfering colors. Also, because it is a strong reducing reagent, a large number of oxidizing materials will produce the iodine color. If the test is used, blanks must be very carefully made.

The most reliable, although not very sensitive, test for platinum is the formation of crystals with dimethylglyoxime. This is best made with very low acid concentration and the solution must be taken to a volume of about 0.2 cc. The crystals appear either bronze or blue, apparently depending upon the conditions under which they are produced. Under the microscope, they are prismatic and distinctly pleochroic. In reflected light the crystals are yellow to bronze when the vibration direction of the light is at right angles to the long axis of the crystal, and dark blue to bluish purple when the vibration direction of the light is parallel to the long axis. Its extinction is parallel.

Palladium. Feigl (*2*) described a sensitive test for palladium using dimethylaminobenzilidene rhodanine, a definite color being obtained with 0.0001 mg. of palladium per cc. The other platinum metals do not interfere, but both gold and silver give much the same color as palladium, and strong mineral acid solutions also interfere with the test.

Feigl (*2*) described a test for palladium with mercuric cyanide and stannous chloride which will detect 0.05 mg. of palladium per cc. Gold and platinum do not interfere, although the sensitivity is reduced if much platinum is present.

The stannous chloride reagent described above gives a brownish color, and 0.05 mg. per cc. can be detected. If platinum or gold is present it must first be removed, and in such cases the authors use dimethylglyoxime to remove the platinum. Potassium iodide solution will detect 0.005 mg. of palladium per cc. of slightly acid solution. The limitations of this test have been described.

Iridium. The well-known test with sulfuric acid and fuming nitric acid was found the most satisfactory. The blue color can be detected definitely in 0.4 cc. of sulfuric acid containing 0.1 mg. of iridium. A slightly greenish color appears with 0.05 mg. of iridium in 0.4 cc. of solution. The other platinum metals, gold, and silver do not produce this color. Because of the amber-colored solution, large amounts of palladium or rhodium will interfere.

Rhodium. In Ivanov's (*3*) test for rhodium, stannous chloride in hydrochloric acid is added to the small volume of the solution to be tested and the liquid is heated. A yellow to orange color will appear with 0.006 mg. of rhodium per cc., and on standing this solution will eventually become somewhat red. Palladium and platinum will interfere because they produce yellow to brown colors in the cold. With a little experience it is possible to detect very small amounts of rhodium in the presence of traces of both palladium and platinum, but it is necessary to make blank tests by adding traces of these metals to dilute solutions of rhodium in order to become familiar with the various shades of color produced. The authors have used this test under these conditions and secured dependable results.

Osmium. The well-known thiourea test for osmium, referred to by Singleton (*4*), is perhaps the most satisfactory. The osmium must be in the form of osmate and 0.01 mg. of osmium per cc. of solution will produce a definite pink color. None of the other platinum metals gives this rose color. Palladium with thiourea turns yellow and ruthenium produces a blue color on heating the solution.

The authors have found that an aqueous solution of pyrogallol produces a blue color with a solution of sodium osmate. If a drop of hydrochloric acid is added to the test solution followed by a drop of concentrated pyrogallol solution, a definite color is obtained if the test solution contains 0.01 mg. of osmium per cc. Rhodium and iridium do not interfere but palladium and platinum give a brown, and gold gives a purple color.

If a drop of a saturated aqueous solution of ephedrine hydrochloride is added to a caustic solution of sodium osmate, an orange color is obtained. The sensitivity of the test is increased by shaking the colored solution with carbon tetrachloride, giving an amber-yellow color. If this liquid is allowed to stand, 0.01 mg. of osmium per cc. will produce a faint color. Platinum and rhodium produce no color reaction. Palladium and gold give a very faint yellow color, but the test is not sensitive for these metals nor for iridium, which gives a very faint green under the same conditions.

Singleton (*4*) records a test for osmium with thiocarbanilide which gives a distinct color if the test solution contains 0.1 mg. of osmium per cc. If the solution is shaken with ether, the ether

layer takes on a deeper red color. By this means it is possible to detect 0.01 mg. of osmium per cc. of solution.

Summary

The percentage of platinum in the crystals formed with solutions of dimethylglyoxime and platinic chloride has been determined.

Gold, but not platinum, can be quantitatively determined by means of dimethylglyoxime.

Solutions of pyrogallol and ephedrine hydrochloride can be used as qualitative tests for osmium.

The efficiency and adaptability of various reagents for the detection of the platinum metals and gold are discussed.

Literature Cited

(1) Cooper, R. A., *J. Chem. Met. Min. Soc. S. Africa*, **25**, 29 (1924–5).
(2) Feigl, F., "Qualitative Analyse mit Hilfe von Tüpfelreaktione pp. 183, 185, Berlin, Julius Springer, 1935.
(3) Ivanov, V. N., *J. Russ. Phys. Chem. Soc.*, **50**, 460–2 (1913).
(4) Singleton, W., *Ind. Chemist*, **3**, 121–4 (1927).
(5) Tananaev, N. A., and Dolgov, K. A., *J. Russ. Phys. Chem. S* **61**, 1377–84 (1929).
(6) Whitmore, W. F., and Schneider, H., *Mikrochemie*, **17**, 279– (1935).
(7) Wunder, M., and Thuringer, V., *Z. anal. Chem.*, **52**, 660–4 (19

Received June 29, 1937.

Determination of Nitrogen and Carbon in the Same Sample

CHARLES T. GAYLEY[1]
Gayley Laboratory, 7334 Princeton Place, Pittsburgh (18), Pa.

A METHOD for determining carbon and nitrogen in the same sample, which is in brief the conversion of the Kjeldahl (*5*) method for nitrogen into a wet method for carbon at the same time, has been used in this laboratory for several months. After the apparatus is set up, the only additional work required to make the carbon determination is the weighing of a carbon dioxide absorption bulb. Because the method is applicable to solids, liquids, and liquids containing dissolved gases, it may prove of value to other workers.

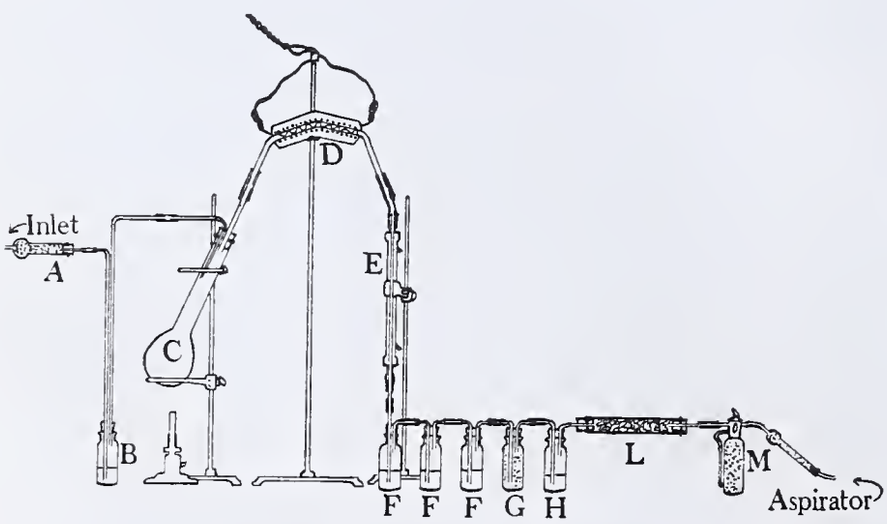

Figure 1. Diagram of Apparatus

As far back as 1880 Warrington and Peake (*8*) showed that the wet chromic-sulfuric oxidation method gave lower results than combustion methods. Believing the losses to be due to incomplete combustion, Gortner (*3*) introduced a small furnace into the train to complete the combustion. Nicloux (*6*) seems to have accomplished the same thing by the use of silver chromate as a catalyst in the acid digestion mixture. This method has had extended use. Gailhat (*2*) used hydrated manganese dioxide in place of chromic acid, and made a nitrogen determination on the residue. However, the method of determining the nitrogen is rather involved, compared to simple distilling over as ammonia. The author believes that the combined method for nitrogen and carbon, given here, has some advantages over previous methods.

[1] Present address, 2326 South Broad St., Philadelphia, Pa.

Apparatus

The gas apparatus consists of a tube, *A*, Figure 1, filled w carbon dioxide absorbent to purify the oxygen, which is th passed through a 60-ml. (2-ounce) wash bottle, *B*, containing little water. This serves as a trap to prevent any oxygen on entering the Kjeldahl flask, *C*, from getting back to tube in case of rapid expansion or evolution of gases. The wa bottle is fitted with a high inlet tube, so that any back pressu in the train may be noted by the water rising in this tube.

The acid digestion is carried out in the 300-ml. Kjeldahl flas *C*, and the reagent used is 10 cc. of concentrated sulfuric ac with the addition of 0.1 to 0.2 gram of copper sulfate (*4*). T gases from the digestion flask are drawn throu *D*, essentially a Pyrex tube containing platinu gauze, and placed in a small elbow-shaped electr furnace for heating. The combustion of the gas from the oxidation of the sample in the acid dige tion is here completed.

The small condenser, *E*, cools the gases con ing from the furnace and condenses steam fro liquid samples such as urine, digested in *C*. Th first 60-ml. (2-ounce) wash bottles, *F*, *F*, *F*, co tain a solution of 6 per cent potassium dichr mate and 10 per cent sulfuric acid, and absor all the sulfur dioxide and trioxide fumes from th digestion flask, as well as all but traces of oth acid fumes from the salts in the sample. These a followed by *G*, containing granular zinc to absor any traces of volatile acids, as the halogen acid that may be aspirated this far.

From *G* the oxygen, now containing nothing bu moisture and carbon dioxide, is passed throug *H*, containing concentrated sulfuric acid, and containing Dehydrite. Finally the dried gase are drawn through the absorption bulb, *M*, wher the carbon dioxide is absorbed.

Elbow Electric Furnace. The housing c the furnace is made of a piece of 5-cm. (2-inch copper tubing 15 cm. (6 inches) long. The tubing is notched i the center and one half is bent down 30° on the other. The tub is then cut lengthwise into two symmetrical halves, which ar hinged together at one end, and a latch is provided to keep th two sections closed together. A device for clamping to a stan is riveted to the side-center of one section.

The furnace tube is made of 12-mm. outside diameter Pyre tubing 37.5 cm. (15 inches) long, bent to an angle of 30° in th center; two other 30° bends are made each 7.5 cm. (3 inches from the center. The cross section shown in Figure 2 indicate the manner of assembly. The center of the Pyrex tube is fille with platinum gauze, 52-mesh, 0.1-mm. (0.004-inch) wire. A piece 1 cm. wide and 15 cm. long, bent about each 1 cm. to form a wavy strip, is sufficient.

A wet strip of asbestos paper about 3 cm. wide is wound

irally on the Pyrex tube for about 9 cm. on each side of the nter, and dried. For a 15-volt supply, a piece of No. 20 ichrome wire 183 cm. long is wound over this asbestos paper, rns being about 4 mm. apart. The winding is covered with et strips of asbestos paper until this core of the furnace fits the ousing. It is then placed in the housing, the protruding ds are pressed into neat and compact shape, and the assembly dried.

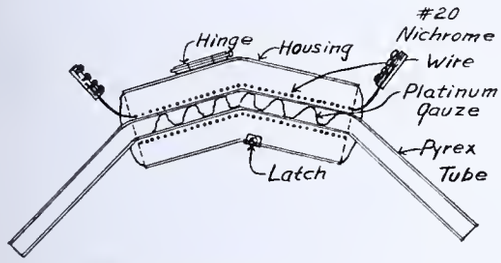

FIGURE 2. FURNACE TUBE ASSEMBLY

As shown in Figure 1, this furnace is mounted so that its nter is also the highest point in the carbon train. Any water at may condense in the cooler parts of the tube runs away from e hot part, preventing damage.

Operation

After the furnace tube has been brought to a dull red heat, sible at the ends of the furnace only in very subdued light, and e weighed carbon dioxide absorption bulb has been placed, e Kjeldahl flask is charged and properly connected. A sample at will give a weight of 100 to 300 mg. of carbon dioxide is laced in the flask, and 0.1 to 0.2 gram of copper sulfate is added, llowed by 10 cc. of concentrated sulfuric acid. When a maerial is readily decomposed, it is better to pour the 10 cc. of oncentrated sulfuric acid into 3 or 4 cc. of water, cool, and then dd to the flask. Danger of loss of gases before the flask can be nnected into the train is thus reduced to a minimum.

Oxygen is drawn through the train at the rate of 5 to 8 bubbles er second, and the heating of the Kjeldahl flask is begun gently avoid excessive back pressure. Heat is gradually increased boil off water, which collects mostly in the first bottle, *F*. t is necessary to put new reagent in this bottle each fourth or fth determination.

The sample is digested for some time after the acid digestion ath has become colorless except for the color made by the copper ulfate, the flame is removed, the flow of oxygen is stopped, and e absorption bulb is weighed. The nitrogen determination is ompleted by the usual distillation.

Discussion

Copper oxide, wire form, has been used in the furnace ube, held in place by plugs of platinum gauze, and occupying nly the hottest part of the tube. The furnace must then be perated above the decomposition point of copper sulfate, nd at this temperature the life of the furnace tube is short.

A convenient carbon dioxide solid absorbent (*7*) may be nade by heating together in an iron pan over a gas stove 35 rams of sodium hydroxide, 5 grams of hydrated lime, and 5 grams of commercial asbestos fiber. The mixture is stirred o granulate and cooled, the lumps are crushed, and the fine s sifted out on a screen, 16 or 20 meshes to the inch, moistened y dropping 3 cc. of water evenly over the granules, and stored n a tight bottle.

The small error in the method, caused by the slight solubility of carbon dioxide in the wash bottle solutions, is reduced to practically nothing after the solutions become saturated by the first passage of carbon dioxide. A little carbon dioxide evolved in the Kjeldahl flask from a carbonate and acid, and drawn through the train, will bring the solutions to the equilibrium point.

Irregularities in the gas flow caused by condensed vapor flowing back to the hot acid digestion mixture are not serious if the inlet tube does not extend too far into the Kjeldahl flask, and if the flask is inclined.

While scarcely a trace of hydrochloric acid, from the reaction of sulfuric acid with chlorides in the sample, or of chlorine has been found to pass the potassium dichromate wash bottles, the granular zinc is used at this point as an extra precaution. A silver sulfate solution has also been used in this bottle for the absorption of any halogen acids.

To prevent bumping, both in the acid digestion and in the distillation of the nitrogen, the end of a spatula of pure calcium hydroxide is added to the Kjeldahl flask after its contents have been diluted and neutralized, ready for distillation. Any sodium carbonate present is precipitated, and the precipitated carbonate and the undissolved calcium hydroxide form myriad points for the dispersal of heat. A thin layer of calcium sulfate forms on the bottom of the flask, further preventing bumping. Some of this tight film is not removed on washing, and when the flask is again used in the carbon train the concentrated acid may be boiled without bumping.

This carbon train may be used to determine the volatile carbon compound in a mixture or in a solution containing both volatile and nonvolatile carbon compounds. This is accomplished by heating the mixture in the Kjeldahl flask, without addition of acid, to 103° C. in an oil bath, drawing the vapor through the elbow furnace, purifying, absorbing, and weighing.

TABLE I. CARBON DETERMINATION

	Theoretical %	Found %
Sugar solution	2	1.99
		2.04
		2.015
		2.004
Urea	20	20.05
		20.01
		19.96
		19.95
Uric acid	35.714	35.63
		35.696
		35.75
		35.63
		35.71
		35.74
		35.61
		35.67
Urine sample	...	0.773, 0.782
		0.689, 0.687
		0.573, 0.572
		0.807, 0.813
		0.841, 0.823
		0.771, 0.787

The method is reasonably accurate, as indicated by the check results on knowns and unknowns given in Table I.

Summary and Conclusions

A wet method is given for determining carbon in liquids or solids while a Kjeldahl nitrogen digestion is being made on the sample. The only additional work involved is that of weighing the carbon dioxide absorption bulb. The elbow furnace gives a means for distilling off much water from a sample without the loss of carbon from volatile compounds. This device makes it possible to determine carbon in a very dilute solution, whereas if the chromic-sulfuric-argentic oxidation mixture is diluted with such a sample oxidation may be incomplete (*1*).

The method is well adapted to the accurate determination of the C:N quotient in urine and in blood serum.

Literature Cited

(1) Ames and Gaither, J. IND. ENG. CHEM., **6**, 561 (1914).
(2) Gailhat, M. J., *Bull. soc. chim.*, (4) **1**, 1016–25 (1907).
(3) Gortner, R. A., *Soil Science*, **2**, 395–441 (1916).
(4) Hawk, P. B., *J. Am. Chem. Soc.*, **29**, 1634–7 (1907).
(5) Kjeldahl, J., *Z. anal. Chem.*, **22**, 366–82 (1883).
(6) Nicloux, M., *Compt. rend.*, **184**, 890–1 (1927).
(7) Stetser, J. B., and Norton, R. H., *Iron Age*, **102**, 443 (1918).
(8) Warrington and Peake, *J. Chem. Soc.*, **37**, 617 (1880).

RECEIVED May 27, 1937.

Internal Electrolysis without Diaphragms

Determination of Copper and Bismuth in Lead-Zinc Ores

J. J. LURIE AND L. B. GINSBURG
Institute of Nonferrous Metals, Moscow 17, U. S. S. R.

THE electroanalytical determination of metals by depositing them inside a galvanic cell, using the electromotive force of the cell itself, was first proposed by Hollard as early as 1903 (*3*) for the determination of nickel in zinc salts. In 1919 it was advanced again by François (*2*) for the deposition of precious metals, but it was not adopted in the analytical laboratory until 1930, when the papers of Sand (*7*) and Collin (*1*) were published. All these authors used in their experiments rather complicated apparatus in which the anode and cathode spaces were separated by a semipermeable diaphragm.

In a series of experiments the present writers (*4, 5, 6*) showed that the diaphragm could be successfully dispensed with, and that the results obtained without it would be no less accurate than in apparatus provided with a diaphragm. The diaphragm increases the internal resistance of the cell and involves the use of a mixer, which greatly complicates the apparatus. The authors' apparatus, having no diaphragm, is very simple: It consists only of an ordinary platinum gauze for electrolysis, upon which is put a metallic plate, bent at right angles. To secure a better contact, the platinum gauze and the metallic plate are bound by copper wire. Such an apparatus can be afforded by any laboratory. Its internal resistance is very low, which makes possible (as will be shown in a later paper) deposition of metals with a very small potential difference.

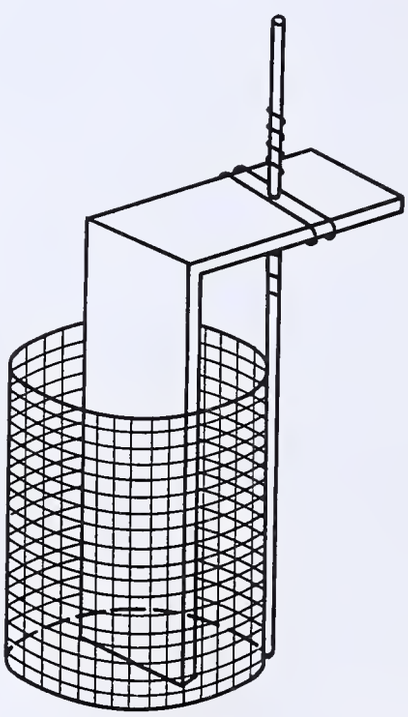

FIGURE 1

When using this apparatus, one should first consider the possibility of direct deposition of the metal to be determined on the metallic plate and not on the platinum gauze. The authors' experiments have shown that with a small quantity of metal deposited, the process takes place only in the desired direction; the metal is deposited on the anode (a metallic plate) in negligible amounts, and deposition on the platinum may be considered as practically complete. With a larg amount of the metal deposited (above a definite limit), direc precipitation (cementation) on the anode becomes marke the current grows weaker, cementation increases, and soo deposition on the platinum gauze ceases. However, th maximum limit for the metal deposit is sufficiently high, an in a quantitative analysis for the determination of smal amounts of admixtures the diaphragm could well be dis pensed with.

TABLE I. DETERMINATION OF COPPER

No.	Introduced: Copper *Gram*	Introduced: Salts *Gram*	Introduced: Acetic acid *Ml.*	Copper Found *Gram*	Note
1	0.0049	.....	5	0.0048	
2	0.0098	.....	5	0.0096	
3	0.0147	.....	5	0.0147	
4	0.0147	.....	5	0.0148	
5	0.0149	.....	10	0.0148	
6	0.0098	.....	10	0.0099	
7	0.0147	.....	10	0.0146	
8	0.0147	.....	10	0.0147	
9	0.0147	.....	10	0.0149	
10	0.0196	.....	10	0.0196	
11	0.0245	.....	10	0.0238	Cementation of copper on the anode was observed.
12	0.0294	.....	10	0.0270	
13	0.0147	NH_4NO_3, 5	10	0.0148	
14	0.0049	$Pb(C_2H_3O_2)_2$, 5	10	0.0048	
15	0.0049	$Pb(C_2H_3O_2)_2$, 2	10	0.0048	

The phenomenon of cementation on the anode is favored by too large a potential difference, as shown by Lurie and Troitzkaja (*6*); when copper was deposited with the aid of a nickel anode, cementation on the anode occurred, and when a lead anode was used the recovery of copper on the platinum gauze was complete.

In all experiments with the simple apparatus without diaphragm, it is most important to maintain a close contact between the electrodes and the copper wire. The places of contact must always be well cleaned with emery paper before proceeding to work.

Apparatus

The authors' apparatus is shown in Figure 1. The cathode is a Fischer's platinum gauze; the anode, a plate of refined lead. The length to the bend is 10 cm.; the length of the arm, 3 cm.; the width of the plate, 1.8 cm.; the thickness, 1.5 mm. In the arm a hole is made so near the bend that the plate when put on the gauze is just in the center. To secure a full contact the electrodes are firmly bound together with a copper wire.

Deposition of Copper and Bismuth

Copper and bismuth nitrate solutions precisely measured with a buret were placed in a 400-ml. beaker, the mixture was neutralized with ammonia and acidulated with concentrated acetic acid, 5 to 10 ml. in excess were added, and the solution was diluted with hot water to 200 ml. and heated to 85° to 90° C.

The electrodes above described, with the cathode previously weighed, were placed in the heated solution and left on an electric plate, maintaining this temperature for 30 to 40 minutes until the metal had completely deposited. Then the electrodes were removed by hand (rubber-gloved) from the electric bath and quickly placed for 5 minutes in a beaker containing 250 ml. of hot water slightly acidulated with acetic acid. The electrodes were then removed and disconnected, the cathode was washed with pure alcohol, and the electrodes were dried in an oven at 100° to 150° C. and weighed. The increase in the weight of the platinum gauze showed the sum of the weights of copper and bismuth.

For a determination of bismuth, the weighed cathode was aced in a 150-ml. beaker, 40 ml. of diluted nitric acid (1 to 4) ere added, the contents of the beaker were heated until the met- s had dissolved, and the cathode was removed and carefully ashed with water over the beaker. To the solution obtained 2 gram of alum was added, and aluminum together with bis- uth was precipitated with ammonia by the usual method.

The filtered and washed precipitate was dissolved in 20 ml. of ot 20 per cent sulfuric acid, and bismuth was determined by the ual colorimetric method with potassium iodide. The copper ntent was determined by difference (the sum of bismuth plus pper, obtained by weighing the cathode, minus bismuth, found lorimetrically) and colorimetrically in the filtrate after the ecipitation of aluminum and bismuth.

The results of the determination of copper only are given Table I, which shows that the determination may be made ith an acidity corresponding to 2.5 to 5 per cent of acetic id. The presence of ammonium salts and lead salts does ot affect the determination.

Experiments 11 and 12 showed the phenomenon of cemen- tion of copper on the lead plate mentioned above. It is ident that the copper content should not exceed 20 mg. to 0 ml. of solution. The lead plate must be cleaned with nery paper before each determination. Care should be ken that the contacts should be close at all places; with ntacts insufficiently close, cementation on the anode will so take place.

The results of the determination of copper and bismuth in e mixture of their nitrates are given in Table II.

Table II. Determination of Copper and Bismuth[a]

No.	Introduced Copper	Introduced Bismuth	Found Copper plus bismuth	Found Bismuth	Found Copper by difference
	Gram	*Gram*	*Gram*	*Gram*	*Gram*
1	0.0050	0.0010	0.0062	0.0010	0.0052
2	0.0048	0.0010	0.0059	0.0009	0.0050
3	0.0050	0.0005	0.0056	0.0005	0.0051
4	0.0096	0.0005	0.0102	0.0004	0.0098
5	0.0096	0.0010	0.0107	0.0009	0.0098
6	0.0100	0.0010	0.0110	0.0009	0.0101
7	0.0100	0.0010	0.0110	0.0009	0.0101

[a] Conditions of experiments: volume, 200 ml.; $t°$, 80–90° C.; free acetic id, 10 ml.; time of electrolysis, 35 min.

Because the lead-zinc ores contain considerable amounts iron (10 to 30 per cent), the authors also had to determine e possibility of precipitating copper and bismuth in the esence of large amounts of iron.

The experiments were carried out under the same conditions t with addition of a ferric salt, and with an acidity of 10 ml. 80 per cent acetic acid to 200 ml. of solution. With a wer acidity and the high temperature required (85° to 90°), basic ferric acetate is precipitated. The first experiments owed that neither copper nor bismuth was precipitated un- r these conditions, in spite of the very low voltage of the rrent as compared to the usual electrolysis. To eliminate e oxidizing action of ferric iron, hydrazine sulfate was added the solution heated to 80° (previous to the electrolysis) til the solution was discolored (a total of about 1 gram). he experimental results are given in Table III.

The introduction of hydrazine sulfate leads to the formation a small amount of lead sulfate, mechanically contaminat- g the cathode during the electrolysis. To remove this de- sit the authors used an additional washing. The bound ectrodes removed from the electrolyte bath were submerged r 5 to 7 minutes in a 5 per cent sodium acetate solution eated to 85° C. and acidulated with acetic acid; then they ere transferred to a beaker containing hot water acidulated ith acetic acid and finally disconnected, the cathode being ashed with strong alcohol.

In addition to iron, which has a dissolving effect upon the eposit of copper and bismuth, the elements having a more sitive electrode potential than lead might interfere with

Table III. Determination in Presence of Iron

No.	Introduced Copper	Introduced Bismuth	Introduced Iron	Found Copper	Found Bismuth
	Gram	*Gram*	*Gram*	*Gram*	*Gram*
1	....	0.0002	0.10	....	0.0002
2	....	0.0003	0.10	....	0.0002
3	....	0.0005	0.10	....	0.0004
4	....	0.0010	0.10	....	0.0009
5	....	0.0010	0.20	....	0.0010
6	....	0.0015	0.20	....	0.0014
7	0.0030	0.0005	0.10	0.0030	0.0005
8	0.0030	0.0005	0.10	0.0030	0.0005
9	0.0050	0.0005	0.10	0.0048	0.0005
10	0.0050	0.0005	0.10	0.0048	0.0005
11	0.0050	0.0010	0.10	0.0048	0.0010

Table IV. Determination in Presence of Arsenic and Antimony

No.	Introduced Cu	Introduced Fe	Introduced As	Introduced Sb	Cu Found	Note
	Gram	*Gram*	*Gram*	*Gram*	*Gram*	
1	0.0129	0.10	0.0020	....	0.0129	The copper deposited on the cathode was of a pure pink color
2	0.0129	0.10	....	0.0010	0.0130	
3	0.0129	0.10	0.0020	0.0010	0.0129	
4	0.0129	0.10	0.0020	0.0010	0.0129	

determination of copper and bismuth. Lead-zinc ores may contain only three elements of this group: silver, antimony, and arsenic.

The data obtained by previous authors show with sufficient clearness that arsenic and antimony, if they are at the beginning present in their higher valency state, are not deposited by lead under conditions of internal electrolysis. The authors made a number of experiments to determine copper in the presence of arsenic and antimony under conditions specified above. The results are given in Table IV.

An admixture of silver may be removed by adding a small amount of chloride or iodide ion. A small amount of chloride ion does not interfere with the electrolysis and does not affect the platinum (*4*).

Determination of Copper and Bismuth in Ores

Copper and bismuth were determined in ores, using the procedure described below. In dealing with the decomposition of the ore two modifications are given, one for the sulfide, the other for the oxidized ores, as the latter are difficultly decomposed by nitric acid, and the insoluble residue contains both copper and bismuth. Those ores are readily decomposed by hydrochloric acid.

Procedure. *Decomposition of Sulfide Ores.* A 1- to 2-gram sample (according to the copper content) of the ore or concentrate is placed in a 250-ml. Erlenmeyer flask and moistened with 3 to 5 ml. of water; 15 to 30 ml. of nitric acid (d = 1.4) are added, and the contents of the flask are boiled for 10 minutes, diluted with 15 to 20 ml. of hot water, and filtered through a loose filter (black ribbon), collecting the solution in a 400-ml. beaker. Without washing, the residue is transferred with a stream of water back to the flask, and the boiling is repeated with 10 ml. of nitric acid (1.4). Then it is diluted again with 15 ml. of water, filtered through the same filter, and the residue is washed 4 or 5 times with hot 3 per cent nitric acid.

Decomposition of Oxidized Ores. A 1- to 2-gram sample (depending on the copper content) of ore is placed in a 250-ml. Erlenmeyer flask and moistened with 3 to 5 ml. of water, 15 to 25 ml. of hydrochloric acid (d = 1.19) are added, and the mixture is boiled for 5 to 10 minutes and evaporated to dryness to remove the hydrochloric acid. To the residue 20 ml. of dilute nitric acid (1 to 1) are added, and the mixture is boiled. Then the contents of the flask are diluted with 15 to 20 ml. of hot water, boiled again, and filtered through a filter of medium thickness (white ribbon). If the insoluble residue is bulky, the nitric acid treatment is repeated.

The nitric acid solution obtained as described above is neutralized with ammonia until ferric hydroxide appears, the precipitate is dissolved in acetic acid, and an excess of 10 ml. of 80 per cent acetic acid is added. The solution is diluted to 200 ml.,

TABLE V. DETERMINATION OF BISMUTH AND COPPER

No.	Added to Ore Free from Copper and Bismuth: Copper	Bismuth	Found: Copper + bismuth	Bismuth	Copper
	Gram	*Gram*	*Gram*	*Gram*	*Gram*
1	0.0050	0.0010	0.0062	0.0010	0.0052
2	0.0050	0.0010	0.0059	0.0010	0.0049
3	0.0100	0.0010	0.0110	0.0009	0.0101
4	0.0100	0.0010	0.0110	0.0011	0.0099
5	0.0150	0.0010	0.0160	0.0009	0.0151
6	0.0200	0.0010	0.0206	0.0010	0.0196

TABLE VI. DETERMINATION OF COPPER AND BISMUTH

Ore	Sample	Found by Usual Method: Cu	Bi	Found by Internal Electrolysis: Cu	Bi
	Grams	%	%	%	%
Oxidized ore	1.0000	0.52	0.027	0.55	0.025
	2.0000	0.52	0.027	0.55	0.025
	2.0000	0.52	0.027	0.55	0.025
	2.0000	0.52	0.027	0.54	0.025
Sulfide ore	1.0000	1.30	0.007	1.30	0.008
	1.0000	1.30	0.007	1.30	0.007
	2.0000	1.30	0.007	1.30	0.007
	2.0000	1.30	0.007	1.29	0.006
Zinc concentrate	1.0000	2.11	None detected	2.12	None detected
	1.0000	2.11	None detected	2.12	None detected
	1.0000	1.55	None detected	1.54	None detected
	1.0000	1.55	None detected	1.56	None detected

heated on a plate to 85° C., and after removing from the plate hydrazine sulfate is added in portions until the solution is discolored (a total of about 1 gram).

The electrodes, bound as shown in Figure 1, with the cathode previously weighed, are placed in the solution and left on a plate for 30 to 40 minutes, the temperature being maintained at 85° to 90° (overheating should be avoided). Then the electrodes are removed by hand (rubber-gloved) and transferred to a 150-ml. beaker containing 100 ml. of a 5 per cent sodium acetate solution, acidulated with 3 ml. of concentrated acetic acid, and heated to 80° C. In 5 to 10 minutes the electrodes are removed in a similar manner and transferred to a beaker with hot distilled water acidulated with acetic acid. In 5 minutes the electrodes are removed and disconnected, the cathode is washed with alcohol, dried in an oven at 100° to 105°, and cooled, and the sum of copper and bismuth is found by weighing.

The weighed deposit is dissolved in 40 ml. of nitric acid (1 to 4) in a small beaker (120 to 200 ml.) with gentle heating. After dissolution, the cathode is washed over the beaker, 0.2 gram of alum, ammonia to a feeble odor, and 0.1 to 2.0 grams of ammonium carbonate are added, and the solution is heated to boiling.

When the precipitate has coagulated, it is filtered through a filter of medium density (white ribbon) and washed as usual with a hot 2 per cent ammonium chloride solution, containing some drops of ammonia. With a high copper content the precipit is reprecipitated. The washed precipitate is dissolved in 20 of hot 20 per cent sulfuric acid and bismuth is determined orimetrically after an addition of 1.5 to 2 grams of potassi iodide and 1 ml. of a 5 per cent sodium bisulfite solution, better, one drop of a stannous chloride solution.

The results of analyses made by this method are given Tables V and VI.

Conclusions

The deposition of copper and bismuth by internal el trolysis may be carried out with great accuracy, using simple apparatus without diaphragm and mixer.

The interfering influence of ferric iron may be eliminat by the addition of hydrazine.

If the copper content of the solution does not exceed mg. to 200 ml. of solution, the lead plate has a smooth surfa and the contacts at the places of junction of the metals a complete, the cementation of copper and bismuth on the le plate is practically equal to zero.

A simple, accurate, and relatively rapid method for the d termination of copper and bismuth in lead-zinc ores has be developed, which has the following advantages over the usu method for copper determination by external electrolysis: preliminary deposition of copper (by thiosulfate, hydrog sulfide, thiocyanate, etc.) is required; the method is accessib for laboratories having no source of direct current (field lab ratories); and less than 1 mg. of copper, which may be d termined by external electrolysis only with difficulty, easily deposited by the internal hydrolysis method, coveri the cathode with an exceedingly even and beautiful coatin Bismuth may be determined by internal electrolysis with considerable saving of time, eliminating the numerous an tedious separations.

Literature Cited

(1) Collin, E. M., *Analyst*, **55**, 312, 495, 680 (1930); **56**, 90 (1931)
(2) Francois, M., *Ann. chim.*, (9) **12**, 178 (1919).
(3) Hollard, A., *Bull. soc. chim.*, **29**, 116 (1903).
(4) Kolossow, W. I., and Lurie, J. J., Trade Standard U. S. S. R Nonferrous Metals, *Fasc.* 45 (1934).
(5) Lurie, J. J., and Troitzkaja, M. I., *Z. anal. Chem.*, **107**, 34 (1936 *Zavodskaya Lab.*, **5**, 1425 (1936).
(6) *Ibid.*, **6**, 33 (1937).
(7) Sand, H. Y. S., *Analyst*, **55**, 309 (1930).

RECEIVED April 17, 1937.

Biological Assay of Vitamin E

Application to Wheat Germ and Wheat Germ Oil

L. S. PALMER, Division of Agricultural Biochemistry, University of Minnesota, University Farm, St. Paul, Minn.

EVANS and Burr (*1*) have adequately described the general procedure which must be followed in order to nonstrate vitamin E. Birth of young following adminis- tion of a known quantity of test substance to female rats proved sterility because of vitamin E deficiency is the basis Evans' (*3*) rat unit of vitamin E.

The smallest quantity of test substance which results in th of young, when given in a single dose prior to the fifth of gestation, is regarded as containing one rat unit. The ocopherol described by Evans, Emerson, and Emerson , which produced this effect in 2.5-mg. dose, thus contained rat units of vitamin E per gram of substance. Olcott l Mattill (*8*) and Olcott (*7*) had previously prepared con- trates of vitamin E having essentially the same potency. ggestions have been made to reduce the size of the unit d thus increase the number of calculated units per gram ubstance) by dividing the effective single dose by the num- of days of gestation in rats. Evans and Burr (*1*) have sented a few data in support of this by showing that a gle dose of wheat germ oil has the same effect as when ali- ts one twenty-first as great are given daily throughout tation. However, the quantitative relationships thus icated cannot be regarded as very convincing when it is sidered that the quantity of vitamin E needed daily must rease greatly with advance in gestation if the vitamin is uired primarily for cell nuclear function of the fetal and cental tissues, as suggested by the work of Mason (*6*) on ticular degeneration in E deficiency. Furthermore, it is icult to visualize the processes by which oral doses of vita- n-containing product consumed during the last few days gestation are digested and metabolized and the vitamin is ectively used by the cells which need it, when the animal ssumed to be receiving the minimum dose. Indeed, it has yet been determined what is the latest day in the gesta- n period when a potent vitamin E product can be given mouth with assurance that the vitamin will exert a physio- ical effect in that gestation.

The conclusion seems justified that the single dose proce- e or its essential equivalent is the only logical one to em- y in a biological assay of vitamin E until more study has n given to questions raised in the foregoing discussion. A survey of the published vitamin E assays based on litters duced, from which one may calculate the units of E pres- per gram of test substance, shows only a general quantita- e relation between different doses of the same substance l the percentage of animals littering. Data regarding the nber of young born (both living and dead) do not improve quantitative character of the test. In view of the fact t vitamin E seems to function exclusively during gestation connection with the nourishment of the fetus at the site of lantation, observations regarding the percentage of im- ntations which give rise to living young in a properly con- ted assay suggested possibilities for improving the ex- ted quantitative relations between dose and effect. This s one of the principal reasons for the present study. Al- ugh the outcome was disappointing, the results have a cer- n qualitative value and may assist other workers to evaluate ir results properly.

At the outset it seemed desirable to bring together into one prehensive statement the details of conducting a vitamin Assay. The published procedures lack standardization in certain particulars in which uniformity seems desirable. Certain details of procedure were adopted arbitrarily without supporting data to justify them, provided they seemed theoretically important and reasonable. The data secured were intended to determine primarily the "live implant efficiency" (L. I. E., percentage of placental implants which resulted in the birth of live young). The results, however, also made it possible to calculate other efficiency values—for example, a (T. I. E., "total implant efficiency") value involving both live and still-born young. In addition, littering efficiency values could be calculated, such as "live-litter efficiency" (L. L. E., percentage of pregnancies which result in litters containing living young) and "total litter efficiency" (T. L. E., percentage of pregnancies which result in live and still-born litters). The theoretical basis for recording individual still births and litters consisting exclusively of still-born young is the assumption that still-born young indicate some, although insufficient, vitamin E.

Procedure for Vitamin E Assay of Oils and Other Products

Basal Ration. The following basal ration, which is a slight modification of the Evans (*3*) ration, is used throughout. Batches of the ration are kept in the refrigerator until used.

Ingredient	%
Commercial casein	27
Autoclaved tapioca (dextrin)	35
Commercial bulk lard	22
Dried brewer's yeast	10
Hawk and Oser (*4*) salt mixture	4
Cod liver oil, U. S. P., mixed in ration at weekly intervals	2

Preliminary Period. Young female rats exactly 21 days old are placed in cages having raised screen floors and given the basal ration *ad libitum*. A number of rats of approximately the same age are kept in the same cage. At about 90 to 100 days of age, daily observations are begun of the sexual cycle, using the vaginal smear technic of Long and Evans (*5*). As soon as an approaching heat stage is noticed by the presence of large numbers of nucleated epithelial cells, the animal is mated with a normal male in a separate cage having a raised screen floor. If successful copulation is determined to have occurred through the presence of sperm and/or plug in vagina or in tray of cage at the next daily examination, further examinations are omitted until the fifth and again on the tenth succeeding day. If no indication of sexual cycle is obtained it is assumed that the animal is pregnant. (Pseudo-pregnancies occur rather frequently. In this case the animal will sometimes be in heat again on the ninth to eleventh day but more frequently on the twelfth to fourteenth day. In these cases the animal must be carried through another resorption before being used for assay.) The animal is kept isolated throughout in a single cage having a raised screen floor.

Beginning the tenth day after impregnation the daily vaginal examination is resumed until the "erythrocyte sign" is secured, usually on the thirteenth to fifteenth day. (The "erythrocyte sign" is the term employed by Evans and Burr, *1*, to "designate the appearance in the vaginal canal on the thirteenth, fourteenth, and fifteenth days of gestation of recognizable numbers of red blood corpuscles.") If this is obtained, pregnancy is assured. Beginning the day the erythrocyte sign is obtained, the animal is weighed daily without further vaginal examination. If the weight increases and then decreases suddenly without evidence of any young on the twenty-first or twenty-second day and if manual examination at time of weighing also indicates the presence of fetuses which are never born or which disappear, or if weight remains essentially stationary (due to the presence of only one or two fetuses) without young being born, the conclusion is drawn that the animal is suffering from vitamin E deficiency. This

animal is now ready for use in a vitamin E assay. An animal which fails to show resorption in the first gestation may be carried through a second gestation or even a third, if necessary, to deplete it of body stores of vitamin E. After a third failure to show resorption the animal is discarded.

Conducting the Assay. Six female rats proved to be suffering from vitamin E deficiency which have been kept continuously on the basal ration are examined daily for sexual cycle and bred to normal males in separate cages at the next estrus. When impregnation is established as in the preliminary period, the animals are isolated and kept in separate cages. The vaginal examinations are omitted until the fifth and tenth days, after which they are resumed daily until the erythrocyte sign is obtained. Cages having raised screen floors are used throughout.

In the meantime the standard or experimental dose of material to be tested is administered to the animal in a single dose in a separate nonscattering feed cup between the first and fourth day of gestation, while withholding the basal ration. Oils are given, mixed carefully with sufficient dry yeast to make a friable paste, or mixed with a few grams of basal ration from which the fats have been omitted; other solid material to be tested is offered in weighed amount also in a separate nonscattering feed cup, the basal ration being withheld for that day.

When the erythrocyte sign is obtained, the test animals are weighed daily and the presence of fetuses is established as soon as possible by increase in live weight and by manual examination. Fetuses can usually be established by manual examination on the fourteenth day. Daily weighing is continued until parturition should occur. Animals which are about to cast a litter, as shown by manual examination and weight increase, are placed on a larger screen, 1-inch mesh, which permits the young to fall through to tray of cage. Resorptions can frequently be detected in advance by vaginal bleeding at some time subsequent to the erythrocyte sign and prior to the day of parturition. However, all rats in a test are carried through the twenty-second day of gestation, regardless of evidence of complete resorption of the fetuses. All animals are autopsied after parturition, or after the twenty-second day if no young are born, to determine the number of implantations and resorptions.

Criterion of Vitamin E Potency. If five of the six animals become pregnant at the mating immediately preceding the administration of the test substance and four of these five animals to which the standard or experimental dose of test substance has been administered give birth to normal living young corresponding to 10 per cent or more of the implantations, the vitamin E potency of the test substance is established. Record is kept of number and weight of young born, number of live and still births, and total number of implantations.

If an assay is started with a rat which proves not to have been pregnant at the time the test material was administered the rat is continued in the assay if successfully bred at the next normal heat, but if this breeding fails the animal is discarded.

The Standard Dose of Test Material. This is the minimum amount of test material administered in a single dose which, when allowing for a margin of variation from natural causes, will produce normal living young corresponding to 10 per cent or more of the implantations in the uterus of a vitamin E–deficient female rat and thus permit the statement to be made that the product contains a measurable amount of vitamin E in such dose.

Use of Less Than Five Rats per Test. The standard number of female rats to be placed on a single test for a standard assay is six. Conclusions may be drawn if five of the six animals are successfully bred at the mating immediately preceding the administration of the test substance. For exploratory research or in t tentative assay of an u known at various doses i permissible to use three r per dose, provided they all successfully bred. It expected that at least t out of the three animals such a test will give po tive evidence of vitamin potency in a potent t product.

Period of Retaini Vitamin E–Deficie Rats before Test. It assumed that a vitamin E–deficient animal is suitable test purposes any time within 3 months after its E deficien has been established, provided it is kept on the basal rati

Quality of Ingredients in Basal Ration. The only gredient whose quality is of special importance is the cod liv oil, which must be U. S. P. grade. Each ingredient should re resent a single lot of substance for any given series of tes in order to avoid introduction of vitamin E into the ba ration of an animal after establishing its deficiency and use for assay purposes.

Discussion. In the author's experience with assa conducted according to this procedure, the chief cause initial fertilities in female rats reared on the basal ration h been starting the rats on the ration when more than days old. The most annoying difficulty has been a fair high percentage (10 to 20 per cent) of pseudo-pregnanc after administration of test substance in spite of definite successful matings with normal males.

Experimental Results

The mean values, their standard deviation, and the co relation coefficients between the different reproduction ef ciencies previously indicated are shown in Table I for vitamin E assays in which 217 rats gave evidence of t vitamin E potency of 39 different samples of material of u known vitamin E value. (The products tested were furnish by General Mills, Inc., Research Laboratories, Minneapol Minn.)

The highest efficiency calculation is determined by coun ing both live and dead litters in relation to the number pregnancies, the next highest when counting both live a still births in relation to placental implantations, the thi

Table I. Reproduction Efficiencies in 54 Vitamin E Assays

Kind of Efficiency	Mean	Standard Deviation
Total litter efficiency[a]	85.59	21.37
Total implant efficiency[b]	71.96	23.35
Live litter efficiency[c]	70.98	26.28
Live implant efficiency[d]	55.59	27.08
Efficiencies Correlated	r	P. E. (r)
L. L. E.:T. I. E.	+0.7935	0.034
L. L. E.:L. I. E.	+0.6069	0.058
T. L. E.:T. I. E.	+0.5430	0.065
T. L. E.:L. I. E.	+0.3206	0.082

[a] Percentage of pregnancies resulting in live and still-born litters.
[b] Percentage of placental implantations resulting in live and still-born young.
[c] Percentage of pregnancies resulting in litters containing living young.
[d] Percentage of placental implantations resulting in live young.

Table II. Relationships between Relative Doses o Vitamin E and Relative Efficiencies of Reproduction

Sample No.	Total No. Rats Used	Relative Dose	Relative T. I. E.[a]	Relative T. L. E.[b]	Relative L. I. E.[c]	Relati L. L. E
1	6	75	240	150	280	150
2	6	67	19	67[e]	19	67[e]
3	6	67	72[e]	33	58	33
4	6	67	108	67[e]	105	67[e]
5	6	73	82	100	89	100
6	4	50	59	100	41	100
7	6	50	108	100	83	33
8	20	67	82	64[e]	100	73[e]
9	22	67	58	142	44	150
	Mean	64.8	92	91.4	91	85.

Values Correlated	r	P. E. (r)
Relative dose:relative T. I. E.	+0.455	0.178
Relative dose:relative L. L. E.	+0.406	0.188
Relative dose:relative L. I. E.	+0.321	0.202
Relative dose:relative T. L. E.	+0.084	0.223

[a] Percentage of placental implantations resulting in live and still-bo young.
[b] Percentage of pregnancies resulting in live and still-born litters.
[c] Percentage of implantations resulting in live young.
[d] Percentage of pregnancies resulting in litters containing living young.
[e] Relative efficiency within 10% of the relative dose.

ghest when counting litters ontaining living young in ration to pregnancies, and te lowest efficiency when unting only living young i relation to placental im- ntations. The method ving the highest values evi- ently gives the most liberal iterpretation of vitamin E tency and the method ving the lowest values the strictest interpretation.

Although there seems to be le choice between the pla- ental implant efficiency hich considers both live and all births and the live litter efficiency, as judged by the mean values and standard deviations, the highest correlation co- efficient is between the live litter efficiency and the live im- plant efficiency. From a biological standpoint the latter cor- relation seems reasonable even if the statistics do not, but biologically one would also expect a highly significant correla- tion between the total litter efficiency (live and dead litters) and the total implant efficiency. Instead, this correlation coefficient is barely significant from a statistical standpoint. The probable reason is that too few rats were used in the sin- gle tests, the result being that a high percentage of the total litter efficiency values (63 per cent) were 100. Only one- third of the living litter efficiency values were 100.

Although these results may give some basis for choosing the most desirable data to secure in a vitamin E assay, they give no information as to the validity of such data in relation to the quantity of vitamin administered.

Table IV. Stability of Vitamin E in Expeller-Process Wheat Germ Oil under Storage

Sample	Age	Storage Conditions	Dose	No. of Rats	Efficiency Values T. L. E.[a]	T. I. E.[b]	L. L. E.[c]	L. I. E.[d]
	Mos.		*Milligrams*		%	%	%	%
A	3	Sealed tin	750	3	100	88	100	75
A	6	Sealed tin	750	6	83	83	83	72
B	1	Sealed tin	750	6	83	65	67	47
B	8	Sealed tin	750	6	100	64	83	48
C	1	Sealed tin	500	3	67	17	67	17
C	12	Sealed tin	500	11	64	28	27	8
D_1	5	Sealed tin[e]	750	3	100	83	67	79
D_2	5	Sealed glass[f]	750	3	100	92	67	67

[a] Total litter efficiency.
[b] Placental implant efficiency (live and still-born).
[c] Live litter efficiency.
[d] Placental implant efficiency (live births).
[e] Kept at −20° F.
[f] Kept at 32° F.

Table II shows the results of the relation between each type of efficiency calculation and the dosage of vitamin obtained from a limited number of tests in which several products were administered at two different levels. The data shown are the relative levels and the corresponding relative efficiency values of each type, and the correlation coefficients. Possibly the samples are too few in number or an insufficient number of rats were employed in each test to warrant final conclusions; nevertheless the correlations are not significant. One is therefore forced to the conclusion that the assay of vitamin E as conducted is at best merely a general quantitative assay and does not warrant very rigid interpretation in terms of units. Assuming that the relative efficiency should be within ±10 per cent of the relative dose, it is seen that this occurred in only seven of the 36 cases, and only two of these occurred even when the number of rats employed was 20 or more. A reference standard, if available, probably would not make the results now obtainable more quantitative, primarily because the assay of the standard would be subject to a large error. This may be too pessimistic a view.

Table III. Comparative Vitamin E Assays of Wheat Germ and Expeller Process: Wheat Germ Oil

Sample	Dose	No. of Rats	Efficiency Values T. L. E.[a]	T. I. E.[b]	L. L. E.[c]	L. I. E.[d]
	Grams			%	%	%
Fresh raw germ I	5.60	3	100	100	100	100
Fresh oil from germ I	0.75	3	100	88	100	75
Fresh raw germ II	5.50	6	100	91	75	61
Fresh processed germ (Embo) from II	5.50	6	100	100	100	75
Fresh processed germ (Embo) III	5.50	3	100	89	100	82
Stored processed germ (Embo) IV	5.50	6	100	78	83	56

[a] Total litter efficiency.
[b] Placental implant efficiency (live and still-born).
[c] Live litter efficiency.
[d] Placental implant efficiency (live births).

The data obtained in this study gave information with reference to various vitamin E–containing products from wheat germ and may be assumed to have definite qualitative value, at least. Table III shows comparative vitamin E assays of raw wheat germ and of the oil expelled from it, raw wheat germ and a processed wheat germ (Embo) made from it, and fresh processed wheat germ and a sample of the same kind of product after standing for one year at room temperature. The samples in the latter comparison were taken for assay from a sealed evacuated tin in which the product is merchandised.

It is evident that the oil expelled from fresh raw wheat germ had definite vitamin E potency, that the type of processing employed in the case of the wheat germ samples tested did not injure the potency, and that vitamin E was retained in the processed germ to a considerable degree for a long period in a sealed evacuated tin kept at room temperature. The latter conclusion is based on comparisons with the other samples of processed germ tested, no assays having been made of the original product when fresh.

Table IV shows comparative vitamin E assays of several samples of wheat germ oil (expeller process) when fresh and after storage at refrigeration temperatures, in sealed tin or glass containers. It is evident that the vitamin E was retained in these samples for a period of at least 8 months in cold storage in sealed tin containers, and that no better preservation occurred in glass; only in sample C, stored for 12 months, was there evidence of some loss of vitamin E.

Conclusions

Biological assays of vitamin E, using oral administration to sterile, vitamin E–deficient rats in the earliest stages of pregnancy using a standardized procedure, have only a general quantitative value. However, results of such assays may be used for a comparison of potent vitamin E–containing products. When thus applied in this study to wheat germ and wheat germ oils it was found that there was (1) a close correlation between the vitamin E in the raw or processed wheat germ (Embo) tested and the pure oil expressed from the fresh germ; (2) a high retention of vitamin E in the processed (Embo) wheat germ kept for one year at room temperature in a sealed, evacuated can; and (3) a high stability of vitamin E in the expressed wheat germ oil for several months at refrigeration temperature in sealed containers, either glass or tin.

Literature Cited

(1) Evans, H. M., and Burr, G. O., *Mem. Univ. Calif.*, 8 (1927).
(2) Evans, H. M., Emerson, O. H., and Emerson, G. A., *J. Biol. Chem.*, **113**, 319 (1936).
(3) Evans, H. M., Murphy, E. A., Archibald, R. C., and Cornish, R. E., *Ibid.*, **108**, 515 (1935).
(4) Hawk, P. B., and Oser, B. L., *Science*, **74**, 369 (1931).
(5) Long, J. A., and Evans, H. M., *Mem. Univ. Calif.*, **6** (1922).
(6) Mason, K. E., *J. Expt. Zoöl.*, **45**, 159 (1926).
(7) Olcott, H. S., *J. Biol. Chem.*, **107**, 471 (1934).
(8) Olcott, H. S., and Mattill, H. A., *J. Biol. Chem.*, **104**, 423 (1934).

Received May 10, 1937. Paper 1502, Scientific Journal Series, Minnesota Agricultural Experiment Station.

A New Fluorescent Test for Aluminum

C. E. WHITE AND C. S. LOWE, University of Maryland, College Park, Md.

FLUORESCENT tests have not found much application in general qualitative analysis because of the inconvenience and expense of the necessary source of ultraviolet radiation. Within the past year low-priced mercury vapor lamps have come on the market and the possibility of using argon bulbs for this purpose is also apparent. The work reported here is the first of a series of experiments begun with the thought of developing specific fluorescent tests which may be applied in routine analysis.

A review of the literature shows no method of detecting aluminum in the presence of beryllium. Aluminon (*4*), the most widely recommended reagent for the qualitative detection of aluminum, will respond to beryllium. Alizarin (red) S (*1*) forms a red lake with beryllium similar to that formed with aluminum. Morin, which gives a green fluorescence in the presence of aluminum, also fluoresces with beryllium (*3*).

Investigation of various organic materials, of structure similar to morin, as possible reagents for the detection of aluminum, revealed a specific fluorescent reaction between Pontachrome Blue Black R and aluminum ion.

Solutions

PONTACHROME BLUE BLACK R. The zinc salt of 4-sulfo-2,2′-dihydroxy azonaphthalene was obtained from du Pont laboratories. Titration with titanous chloride indicated that the dye contained 62.4 per cent of the zinc salt.

ALUMINUM SOLUTION. Baker's analyzed potassium aluminum sulfate was used as a source of aluminum.

BERYLLIUM SOLUTION. Beryllium nitrate of C. P. quality from the Brush Beryllium Company was used in making beryllium solutions. The absence of aluminum in this reagent was indicated when no precipitate was obtained with 8-hydroxyquinoline.

Apparatus

A Hanovia quartz mercury vapor lamp equipped with "Wood's glass" (*2*) as a filter served as a source of ultraviolet light. A number of the fluorescing solutions were also observed under ultraviolet light produced by a battery of three argon electric light bulbs, to determine whether such a source of ultraviolet radiation could be used for this purpose. Observations were made in a dark room. Containers were ordinary soft-glass test tubes. Quartz containers were found to have no advantage over soft glass.

Experimental

A series of solutions containing 10 ml. of aluminum solution and increasing amounts of the dye solution in intervals of 0.05 ml. was prepared and examined for fluorescence. A bright orange-red fluorescence was obtained in each case. As observed through a spectroscope, the color emitted corresponded to a red band lying between wave lengths 6975 Å. and 6365 Å. The intensity of the fluorescence appeared to increase until the solution containing 0.30 ml. of dye solution was reached. From this point to the solution containing 0.50 ml. of dye solution no difference in intensity could be distinguished.

Addition of 1 ml. of 1 *N* alkali to 10 ml. of a fluorescing solution destroyed the red color of the dye and also the fluorescence, the resulting mixture appearing a dull blue under the lamp. Nitric acid destroyed the dye. Addition of 1 ml. of normal sulfuric, hydrochloric, or phosphoric acid to 10 ml. of a fluorescing solution destroyed the fluorescence. One milliliter of 6 *N* acetic acid had no effect on the fluorescence, othe than to change the color slightly to a lighter red.

A series of solutions having decreasing amounts of al minum, each containing one-tenth as much aluminu as the preceding solution, was prepared. Solutions as dilu as one part per 100,000 showed a fluorescence immediatel After standing about half an hour fluorescence could be o served in all concentrations down to a solution of one part p million. The solutions were allowed to stand overnight b fore making a final observation for fluorescence. One part aluminum in 5,000,000 parts of water could be detected in th way. Using argon bulbs as the source of ultraviolet radi tion, one part of aluminum, in 100,000 parts of water w readily detected but smaller concentrations did not give pos tive results.

The following ions did not interfere with the detection aluminum: silver, mercury, lead, bismuth, cadmium, arseni antimony, tin, zinc, manganese, gallium, indium, thallium calcium, strontium, barium, magnesium, sodium, potassium ammonium, lithium, rare earth, chloride, nitrate, sulfat phosphate, and tartrate. The presence of the highly colore ions, copper, chromium, iron, nickel, and cobalt masks th fluorescence, but after precipitating with sodium hydroxi in excess and acidifying with acetic acid fluorescence is evide in each case. Hexavalent chromium interferes but may b removed by ordinary procedures of qualitative analysi Fluorides interfere but may be removed satisfactorily b precipitating with calcium chloride.

Beryllium gives no fluorescence with the dye itself nor do it in any way interfere with aluminum fluorescing.

Analysis of the fluorescing material indicates that an al minum salt of the dye is formed.

This analysis (Table I) corresponds to one atom of alum num, one atom of zinc, and five dye radicals, the samples a pearing to be mixtures of the zinc and aluminum salts of t dye. Although these data are not conclusive proof that a aluminum salt is formed, they are at least a fair indication.

TABLE I. ANALYSIS OF FLUORESCENT MATERIAL

	Aluminum %	Zinc %	Dye Radic %
Sample prepared from 16 grams of alum to 1 gram of dye	1.35	3.33	95.8
Sample prepared from 13 grams of alum to 1 gram of dye	1.36	3.42	95.5

Procedure

The solution should be made alkaline with sodium hydroxid any precipitates forming being filtered off. Hexavalent chr mium must be reduced and fluorides must be removed. T solution is then made acid with acetic acid and 0.5 ml. of a 0.1 p cent solution of Pontachrome Blue Black R is added. Where sol tions as dilute as 1 part per million of aluminum are being teste a half hour should be allowed for the fluorescence to develop.

Summary

The orange-red fluorescence produced under ultraviol light by Pontachrome Blue Black R with aluminum ion sensitive to one part in 5,000,000 parts of water, and can used in the qualitative detection of aluminum in the presen of beryllium and other elements with which it is common

und. With argon bulbs, a cheap and convenient source of traviolet radiation, concentrations as low as one part of aluinum in 100,000 parts of water may readily be detected.

The intensity of the fluorescence appears to vary with the uminum content within a limited range.

Analysis indicates that an aluminum salt of the dye is rmed.

Literature Cited

(1) Atack, *J. Soc. Chem. Ind.*, 34, 936–7 (1915).
(2) Radley and Grant, "Fluorescence Analysis in Ultraviolet Light," 2nd ed., London, Chapman & Hall, 1936.
(3) Schantl, *Mikrochemie*, 2, 174 (1924).
(4) Yoe and Hill, *J. Am. Chem. Soc.*, 49, 2395 (1927).

Received June 11, 1937.

Volumetric Determination of Selenium

A Critical Study of the Norris and Fay Method

W. C. COLEMAN[1] AND C. R. McCROSKY, Syracuse University, Syracuse, N. Y.

THE accuracy of the Norris and Fay method (*7*) for the determination of selenious acid has long been accepted the basis of rather limited evidence (*1, 4, 6, 8, 11*). This ethod depends on the following reaction:

$$Na_2S_2O_3 + H_2SeO_3 + 4HCl \longrightarrow Na_2SeS_4O_6 + Na_2S_4O_6 + 4NaCl + 3H_2O$$

An excess of a standard thiosulfate solution is titrated with standard iodine solution, the titration being carried on near C. presumably to prevent decomposition of the thiosulfate. occurred to the authors, after the revision of the atomic ight of selenium from 79.2 to 78.96 (*3*), that a reëxamination of this method using pure selenium as a reference material s desirable. In the course of the investigation some simfication of technic was introduced and the conditions for e accurate application of the method were established.

Preparation of Materials

SELENIUM. A technical grade of selenium (supplied through e courtesy of the United States Metals Refining Co.) was disved in pure sodium cyanide and air was bubbled through the ution for several hours to precipitate any tellurium, which was en removed by filtration. The filtrate was poured into an ess of dilute hydrochloric acid to precipitate the selenium.

This purification procedure was repeated twice and the final oduct oxidized to selenious acid with concentrated nitric acid. on evaporation to dryness, the selenium dioxide was subjected three sublimations and the pure white oxide thus obtained was solved in water. After making the solution 5 *N* with hydroloric acid, the selenium was precipitated with hydroxylamine drochloride and thoroughly washed with water and then with ohol and ether. It was dried, carefully melted, and poured o water to form small pellets.

SODIUM CYANIDE. A pure grade, free of ferricyanide and reing agents, was used.

POTASSIUM BROMATE, POTASSIUM IODATE, POTASSIUM DIROMATE. Baker's analyzed salts were twice recrystallized m water with centrifuging. These substances were used for ndardizing the thiosulfate solution.

Experimental

The following procedure was employed for preparing the ution of the pure selenium for the Norris and Fay titration:

From 0.35 to 0.45 gram of the element was weighed into a 250-. flask, 2 ml. of 1.42 nitric acid were added, and the flask was ered and warmed carefully until solution was complete. After ling, 5 ml. of 1.84 sulfuric acid were added, the solution was in cooled and 3 grams of urea were added to discharge the ess of nitric acid. (Bruckner, *2*, states that solutions of seleus, nitric, and sulfuric acids can be evaporated to fuming with loss of selenium. This suggested means of eliminating nitric d before using the Norris and Fay titration. In the authors' experience, however, repeated experiments with known amounts of selenious acid invariably resulted in low values on subsequent titration.)

After the vigorous evolution of gases ceased the solution was digested for 15 minutes on the hot plate, diluted to above 75 ml., transferred to a volumetric flask, and diluted to exactly 250 ml. For each titration 50-ml. aliquots were used, diluting to make the final volume 150 ml. All titrations were made at 20° C. The excess thiosulfate solution was controlled by a method described below. The normality of the thiosulfate solution was checked independently by three primary standards: potassium bromate, potassium iodate, and potassium dichromate.

The results in Table I refer the Norris and Fay method directly to pure selenium and their average shows that the method can be depended on to an accuracy of less than 2 parts in 1000. It seemed advisable to support the above data by using another method to oxidize purified selenium to selenious acid. Standard potentials for the following couples are available (*5, 9*):

1. $Se + 3H_2O \longrightarrow H_2SeO_3 + 4H^+ + 4e$ (black) $\quad E = -0.74$
2. $Br^- \longrightarrow {}^1/_2Br + e \quad E = -1.064$

From these data it seems that the oxidation of selenium with bromine in 1 *N* hydrobromic acid should be quantitative. The formation of selenium monobromide made it impossible to oxidize the black modification smoothly, but this difficulty was avoided by getting the selenium into the red form and keeping it in a finely divided state. The equilibrium constant for the reaction

$$H_2SeO_3 + Br_2 + H_2O \longrightarrow HSeO_4^- + 2Br^- + 3H^+$$

is 0.88 (*10*). The velocity of the reaction for a 1 *N* hydrobromic acid solution for the oxidation of selenious to selenic acid should not be significant if the excess bromine is carefully controlled.

PROCEDURE. From 0.35 to 0.45 gram of selenium and 5 ml. of 10 per cent sodium cyanide solution were digested on a hot plate in a 250-ml. flask until the selenium completely dissolved. The solution of sodium selenocyanate in excess sodium cyanide was diluted to 250 ml. and 50-ml. aliquots were evaporated to about 20 ml. Then 2 ml. of a filtered 1 per cent gum arabic solution and 5 ml. of 5 *N* hydrobromic acid were added. This caused the decomposition of the selenocyanate with the liberation of red selenium which was kept colloidally dispersed by the protective agent.

A rapid stream of air was bubbled through the solution for 15 minutes, which removed hydrogen cyanide sufficiently so that the formation of cyanogen bromide was minimized.

Most of the selenium was oxidized by adding dropwise a slight excess of a saturated solution of potassium bromate. Then the

[1] Deceased.

Table I. Determination of Selenium

0.09195 N $Na_2S_2O_3$ Corrected, after titration	Excess	Selenium Present	Selenium Found
Ml.	*Ml.*	*Gram*	*Gram*
42.06	3.09	0.07632	0.07642
39.23	0.79	0.07119	0.07128
40.30	0.55	0.07315	0.07322
39.88	0.65	0.07234	0.07246
47.12	0.56	0.08553	0.08561
35.16	0.36	0.06379	0.06388
46.03	0.73	0.08352	0.08362
43.73	0.61	0.07933	0.07945
41.89	0.62	0.07602	0.07611
41.84	0.43	0.07591	0.07602

Table II. Determination of Selenium

0.09195 N $Na_2S_2O_3$ Corrected, after titration	Excess	Selenium Present	Selenium Found
Ml.	*Ml.*	*Gram*	*Gram*
38.44	0.18	0.06981	0.06984
38.09	0.17	0.06923	0.06921
41.14	0.41	0.07480	0.07475
37.04	0.16	0.06738	0.06730
46.36	0.62	0.08433	0.08424
46.61	0.74	0.07752	0.07742
39.57	0.50	0.07193	0.07189
44.66	0.57	0.08118	0.08114
40.65	0.37	0.07393	0.07385
38.18	0.50	0.06937	0.06934

oxidation was carefully continued with 0.1 N bromate until the discharge of the red selenium marked the completion of the reaction. A few drops of a saturated alcoholic solution of acetanilide were added to discharge the excess bromine. The flask was covered and heated just to boiling.

After diluting the sample to make the final volume 150 ml., starch was added and the solution was cooled to 20° C. and titrated.

The average of the results of a number of analyses, given in Table II, shows an accuracy for the Norris and Fay method of less than 1 part per thousand when pure selenium is analyzed. A small excess of thiosulfate solution was used, as shown in Tables I and II. It is evident that pure selenium can be used as a primary standard for thiosulfate solutions which are to be used for the determination of selenious acid.

The Norris and Fay method called for the use of an excess of sodium thiosulfate solution in an acid solution and a low temperature in order to suppress the decomposition of the thiosulfate. Only a limited amount of information is available on the effect of temperature and the amount of excess thiosulfate on these titrations. To study these effects, solutions of selenious acid were carefully standardized by the method of Lenher and Kao (*4*).

Measured volumes of selenious acid solution were pipetted into a 250-ml. Erlenmeyer flask. After adding starch solution and 5 ml. of 6 N hydrochloric acid, the solution was diluted to make the final volume 150 ml. In a series of twenty analyses the excess of thiosulfate was varied from a few tenths of a milliliter to 15 ml. and the titrations were made at 0° and 20° C. Results obtained indicate that so long as the excess of thiosulfate is no greater than 5 ml. of 0.1 N solution, an accuracy of 1 part in 1000 is obtainable regardless of whether the titration is carried out at 0° or 20° C. A greater excess should not be used, since unsatisfactory values are obtained both at 0° and 20° C. Many selenium determinations by the Norris and Fay method have been made in this laboratory at room temperature in an entirely satisfactory manner when a small excess of thiosulfate is used. It is unnecessary to cool the solutions to 0° C.

In any critical examination of this method, the effect of potassium iodide on the starch-iodide end point should be considered.

The procedure employed was the same as that previously described. Titrations were made at 20° C. and when potassium iodide was used the concentration was made 2 per cent of the final volume by adding a 25 per cent solution after the addition of an excess of thiosulfate. Thiosulfate solutions of three normalities were used. Six analyses were carried out with each normality, three with and three without the presence of potassium iodide.

When using 0.1 N solutions, results equally satisfactory are obtained in the presence or absence of potassium iodide. With 0.01 N solutions, potassium iodide should be employed and its use is imperative when the solutions are 0.001 N.

It is obvious that a method for limiting the excess of thiosulfate to 5 ml. or less is desirable. This can be done by ad ing potassium iodide solution (2.5 per cent) dropwise, 1 to drops producing a local starch-iodide blue which fades stirring.

$$SeO_2 + 4HI \longrightarrow Se + 2H_2O + 2I_2$$

Thiosulfate is added in 5-ml. portions until upon the ad tion of potassium iodide, the starch-iodide blue is no long produced. Since the stoichiometrical relations are the sa for the hydriodic acid reduction of selenious acid as for t thiosulfate, no correction is necessary for the addition of t iodide. When 0.01 and 0.001 N solutions of thiosulfate a employed, 25 per cent potassium iodide should be used for t indicator. This method for keeping the excess of thiosulfa to less than 5 ml. is rapid and reliable, and is important, sin with the use of a larger excess the Norris and Fay titration less accurate.

In the Norris and Fay procedure the titration is carried in the presence of hydrochloric acid. The authors fou that hydrobromic, sulfuric, and perchloric acids were equal satisfactory at both 0° and 20° C., with thiosulfate solutio 0.1 N, 0.01 N, and 0.001 N. The weak acids, acetic a phosphoric, were found to be unsatisfactory, as was nitric ac

Summary

Using pure selenium as a primary standard, the accuracy the Norris and Fay method was found to be between 1 and parts per 1000.

This titration can be carried out at room temperature i small excess of thiosulfate solution is used. A rapid meth for controlling this excess is described. This modificati results in a considerable saving of time in the use of t method. For accuracy only a small excess of thiosulfa solution should be used.

Hydrobromic, sulfuric, perchloric, and hydrochloric ac can be used in the Norris and Fay procedure.

Literature Cited

(1) Berg and Teitlebaum, *Chem.-Ztg.*, **52**, 142 (1928).
(2) Bruckner, K., *Z. anal. Chem.*, **44**, 305 (1933).
(3) Honigschmid and Kapfenberger, *Z. anorg. allgem. Chem.*, 21 198 (1933).
(4) Lenher and Kao, *J. Am. Chem. Soc.*, **47**, 2454 (1925).
(5) Lewis and Randall, "Thermodynamics and Free Energy Chemical Substances," New York, McGraw-Hill Book C 1923.
(6) Moser and Prinz, *Z. anal. Chem.*, **57**, 277 (1918).
(7) Norris and Fay, *Am. Chem. J.*, **18**, 705 (1896).
(8) Norton, *Z. anorg. Chem.*, **20**, 221 (1899).
(9) Schott, Swift, and Yost, *J. Am. Chem. Soc.*, **50**, 726 (1928).
(10) Sherrill and Izard, *Ibid.*, **50**, 1665 (1928).
(11) Someya, *Z. anorg. allgem. Chem.*, **187**, 337 (1930).

Received July 12, 1937.

Improved Extractor for Monoamino Acids

D. W. WOOLLEY, University of Wisconsin, Madison, Wis.

HE extraction of monoamino, monocarboxy amino acids from neutral aqueous solution with butyl alcohol (*1*) has been shown e useful in the isolation of these compounds. One difficulty has ı that because of the relatively high temperature required to boil butyl alcohol, some of the amino acids are converted into their ydrides. While this difficulty has been partly overcome by reduc- the pressure in the extractor, the amino acids which precipitate in boiling flask adhere to the walls and consequently are still subjected ther elevated temperatures.

he apparatus shown in the diagram eliminates this difficulty, for as amino acids crystallize in the modified boiling flask, they settle to bottom of the tubular part where they remain at room temperature. e the capillary extends only to the bottom of the heated zone, the r layer of liquid is not stirred and the extract remains quiescent. ion from a water pump is applied at the top of the condenser and is lated by adjusting a screw clamp on a piece of rubber tubing ched to a side arm at the top of the condenser. The temperature he boiling butanol is about 50° C. With this extractor no amino anhydrides could be detected in the extract. While this apparatus developed primarily for the extraction of amino acids, it undoubtedly d be useful wherever it is necessary to extract heat-labile sub- ces from solution with an immiscible solvent.

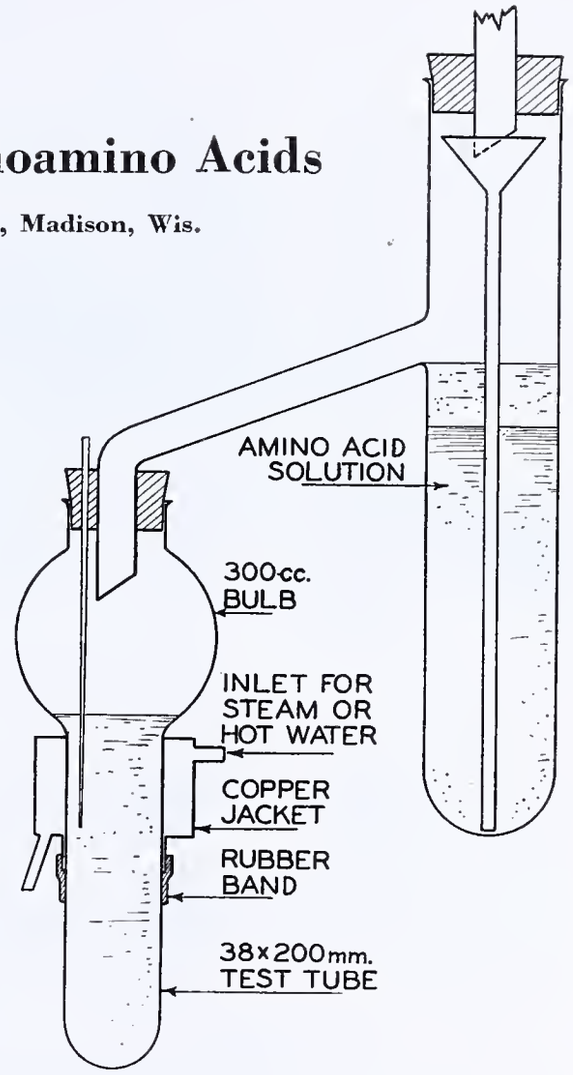

Literature Cited

Dakin, H. D., *Biochem. J.*, **12**, 290 (1918).

IVED June 29, 1937.

Reaction of Alcohol-Gasoline Blends to the Doctor Test

. K. McPHERSON AND LEO M. CHRISTENSEN, The Chemical Foundation of Kansas Company, Atchison, Kan.

NE of the common qualitative methods for detecting the presence of mercaptans in motor fuel is the doctor s The chemistry of this test has been reviewed by dt and Driggs (*4*) who summarize the reactions as lws:

$$2RSH + Na_2PbO_2 \longrightarrow 2NaOH + Pb(SR)_2$$
$$Pb(SR)_2 + S \longrightarrow PbS + (RS)_2$$

at other reactions occur was recognized by Hallett and rs (*3*). Peroxides are known to affect the reaction .

e commercial distribution of alcohol-gasoline blends o reports that these fuels give a sour reaction in this very similar to that obtained with mercaptans or per- s. In view of these reports a series of tests was made arious substances which are commonly used as de- rants for ethyl alcohol, ethyl alcohol itself, and ethyl ol in blends with gasoline. The results of these tests iven in Table I. All blends of gasoline with 40 per cent ore ethyl alcohol show a sour reaction.

I view of these results it is recommended that the A. S. I. methods be used for the determination of sulfur in ol-gasoline blends. If a qualitative test for mercap- is necessary, the presence of these interfering sub- es must be taken into account. The authors have not studied these reactions further, since the test is not quantitative and is not generally accepted (*1*).

TABLE I

Denaturants:	
Gasoline	Sweet
Benzene	Sweet
Acetone U. S. P.	Sour
n-Butanol C. P.	Sour
Mixed isonitriles	Sour
Wood alcohol	Sour
Pontol K	Sour
Ethyl alcohol C. P.	Sour
Alcohol-gasoline blends:	
Blend 1. Gasoline 95%, ethyl alcohol 5%	Sweet
Blend 2. Gasoline 90%, ethyl alcohol 10%	Sweet
Blend 3. Gasoline 80%, ethyl alcohol 20%	Sweet
Blend 4. Gasoline 70%, ethyl alcohol 30%	Sweet
Blend 5. Gasoline 60%, ethyl alcohol 40%	Sour

Literature Cited

(1) Am. Soc. Testing Materials, Committee D-2, A. S. T. M. Standards on Petroleum Products and Lubricants, pp. 289–97 (1936).
(2) Brooks, B. T., IND. ENG. CHEM., **16**, 588 (1924).
(3) Hallett, R. L., and Sowers, W. H., *Petroleum Eng.*, **1** (8), 78–81 (1930).
(4) Wendt, G. L., and Driggs, S. H., IND. ENG. CHEM., **16**, 1113 (1924).

RECEIVED July 23, 1937.

A Rapid Moisture Tester

EGBERT FREYER, Spencer Kellogg & Sons, Inc., Buffalo, N. Y.

IN THE control of the crushing of oilseeds and in various other plant-control programs, speed in making moisture determinations is often of greater importance than absolute accuracy of results. Moreover, simplicity of procedure and manipulation is a desirable feature of a test intended primarily for plant use, in view of the necessity of letting the shift operators maintain their own control after the usual laboratory hours and in cases where the scale of operation is hardly extensive enough to justify employing a chemist.

Most of the rapid moisture-testing equipment in common use suffers from one objection or another. The Tag-Heppenstall resistance meter is extremely useful in handling large numbers of grain samples with a minimum of delay and a maximum of ease, but the first cost is high and it is not adaptable to ground materials, nor to those of relatively low moisture content. The Brown-Duval tester is bulky and elaborate; it requires the handling of considerable oil, and the number of samples which can be run at one time is limited. Moreover, the accuracy obtained in both met is not all that one might desire.

The tester described here follows the conventional dr oven principle and is a modification of an English-n device, the Carter-Simon tester, for which the writer found only one domestic source of supply (The Grain porting Bureau, Chicago). The accuracy is about the s as obtained in the conventional oven. The present de possesses the following advantages over its protot (1) Twice as many samples may be put through in one

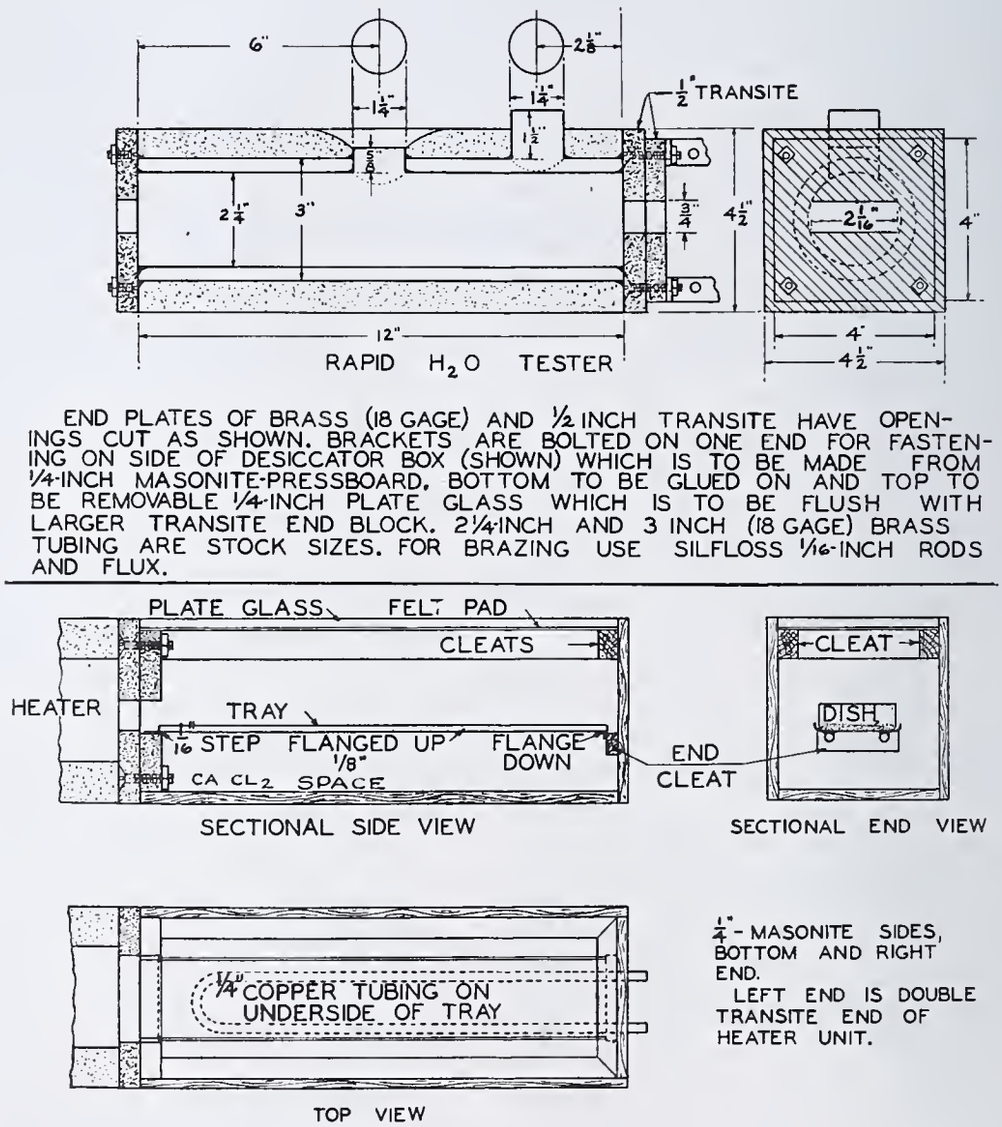

FIGURE 1

(2) A built-on water-cooled desiccator saves about minutes by reducing the cooling period. (3) When fitted a driving mechanism, six samples may be run thro automatically and left in the desiccated cooling chan until the operator can make the final weighings.

The usual objection to the use of a high temperature shortening the time of drying results from the loss, thro volatilization or decomposition, of matter not water. apparatus overcomes that objection, at least in part,

ring the rapid passage of such a quantity ot, dry air over the material that the mois- is removed before the material itself has otherwise to lose weight. This action is mplished by the simple and ancient means roviding an adequate stack to induce a g draft. (See Figures 1 and 2.)

Apparatus

e heating space consists of a 5.7-cm. (2.25- brass tube, 30.5 cm. (12 inches) long, brazed ch end to brass plates 11.4 cm. (4.5 inches) re, into which are cut openings just large gh to pass easily the official American Oil ist Society's aluminum moisture dishes (2 .75 inches, 5 × 1.9 cm.). Concentric with ir chamber tube, and also brazed to the end s, is a 7.6-cm. (3-inch) brass tube forming, the inner tube, a jacket in which the heat- iquid is boiled. Through the center on the asses a 3.7-cm. (1.5-inch) brass nipple for ecting the glass or metal stack, which also s as a thermometer well. Another short nipple communicat- nly with the jacket carries a reflux condenser. Running tudinally through the air chamber is a shelf of brass on which oisture dishes rest.

at is furnished by a 250-watt, 30.5-cm. (12-inch) space r wired on the bottom. The outside is lagged with 1.27 (0.5 inch) of asbestos-magnesia, except on the end plates, e 1.27-cm. (0.5-inch) transite pieces are secured with bolts. e outlet end, however, a second smaller square of transite tened to serve as the end of the desiccator chamber, which ply a box 11.4 × 11.4 × 30.5 cm. (4.5 × 4.5 × 12 inches) tside dimensions, made of 0.63-cm. (0.25-inch) masonite ansite) and held together by angle brackets bolted on the e. Down the length of this is a brass strip, flanged slightly ther side to keep the dishes centered. A loop of 0.63-cm. -inch) copper tubing is soldered to the under side of this through which water may be passed to cool the strip and rden of hot moisture dishes, thus saving several minutes. um chloride is kept in the box to a level almost flush with trip. The cover is a removable glass plate resting on all on cleats faced with felt.

Table I. Temperature Variations

Time *Min.*	No. Tests in Oven	Temperature at Center ° *C.*
Start	Empty	142
1	2	142
4	2	142
6	4	127
9	4	127
11	6	124
14	6	128
16	4	128
19	4	136
21	2	138
24	2	141

Table II. Check Results

Material	1.5 Hours at 110° C. in Freas Oven %	15 Min. at 135–140° C. in Freyer Tester %
inseed meal	8.28	8.36
	11.13	11.19
	10.72	10.54
	10.88	10.86
astor beans	5.0	5.0
uller's earth	9.01	9.16–9.20[a]
eal	9.1	9.1
	8.3	8.3
	9.5	9.55

[a] me material put through second time.

e heating liquid should be chosen so that when it the air temperature at the base of the stack is 136° to 2 C., and does not fall below 120° C. when the oven is d. The writer uses a petroleum fraction boiling at 0 to 250° C. Table I shows how the temperature varied g a full run.

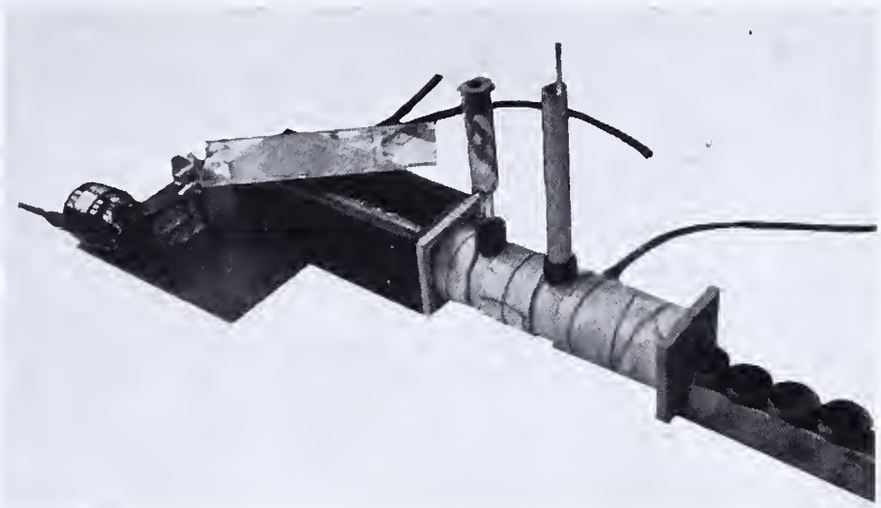

Figure 2

Operation

Two dishes containing the material being tested (5 grams each) are shoved into the open end, left for 5 minutes, and then moved into the center of the air space by shoving the next two tests in behind them. Five minutes later two more tests are introduced, each dish moving up two spaces. At the end of 15 minutes the first two will have been shoved into the desiccator; and at 5-minute intervals different pairs will pass out of the oven into the desiccator, each pair having been in the heater for 15 minutes; and each test will have occupied (relative to the ends and center) the same position as every other test, and will have been submitted to the same heating conditions.

In this respect the present method possesses an advantage over the conventional drying oven, in which, unless specially designed, temperature variation from one shelf to another may occur. The conditions chosen were such as to give the same results on soybean and linseed meals and cracked soybeans as are obtained in a Freas oven at 110° C., drying for 1.5 hours. How well the results check may be seen in Table II.

If desired, the tester may readily be equipped with a simple mechanism to draw the samples through the heater at the proper rate. The photograph shows a small motor with built-in double reduction gears driving a shaft, around which winds a piece of string drawing through a small sled-like strip of metal carrying the loaded moisture dishes. It is timed so that 30 minutes elapse during the passage of the first dish from the entrance of the tester to the end of the desiccator, or 61 cm. (24 inches). It would be very easy to rig a tripping device to shut the motor off when all dishes have passed through the heater. Ordinarily, an interval timer is used, and becomes almost a necessity if the motor drive is not employed, and if the operator's attention is required on other duties. An additional convenience is a small stick 45 cm. (18 inches) long and marked at 10-cm. (4-inch) intervals to use in shoving the pairs of tests through the oven. The marks serve to indicate the positions occupied by the tests when only a few are run.

Received May 10, 1937.

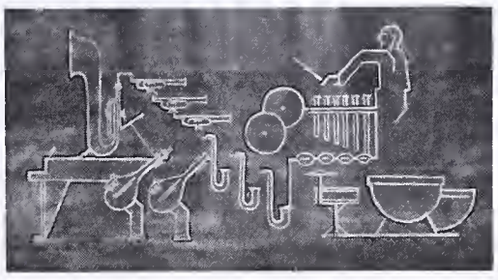

A Sensitive Glass Electrode of Durable Form

ANGUS E. CAMERON
Eastman Kodak Company, Rochester, N. Y.

THE fragility of the ordinary bulbular form of glass electrode is a matter of common experience. The electrode described here approaches the ideal combination of low resistance and rugged form. The steps in its construction are outlined in Figure 1.

A bulb of fairly heavy wall is blown from 1-cm. diameter Corning 015 glass. This bulb is blown at an angle of 45° to the tube and is about 2 cm. in diameter. A small needle flame is then directed against the bulb near the stem and, when a small spot of glass is hot, the bulb is removed from the flame and sucked in, thus forming a bulb within a bulb, as shown in *B*. The sucking is best done through a rubber tube in order to observe the formation of the inner bulb. The bulb is allowed to cool somewhat and a spot on the bottom, diametrically opposite the top opening, is heated with a tiny gas flame. A flame about 1 cm. long, burning on the end of a drawnout glass capillary, is suitable for this operation. A small bulb is sucked in until it touches the inner bulb and forms a flat membrane. Without further suction, the flame is directed at the center of this membrane until the glass melts through and the hole opens out.

It has not been found necessary to attempt to anneal these electrodes. Breakage from strain occurs principally in electrodes having too thick an outer bulb. Electrodes which are so thin as to lack durability can be eliminated by gently sucking or blowing in them. A membrane which shows any spots of color, or which clicks when blown in, is too thin. The thickness of the inner bulb can be regulated somewhat by the size of the area heated before the bulb is sucked in. Dependable electrodes having resistances of from 1 to 10 megohms are easily made.

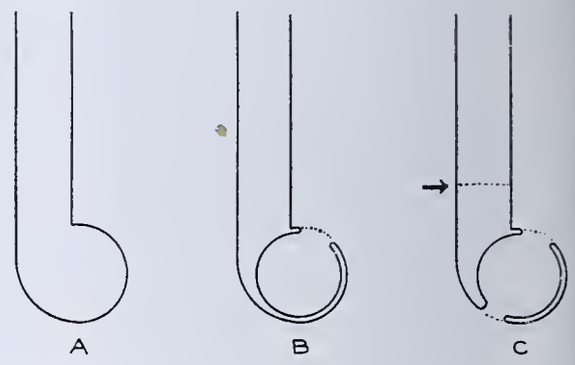

FIGURE 1

The electrodes are filled with a small amount of buffe the level indicated by the arrow in *C*, and a suitable refer electrode is inserted. The electrode is immersed in the known solution to the depth indicated by the arrow.

Electrodes of this form are very sturdy, but it is obv that a severe jolt will break them when they are filled liquid. Because of the form of the sensitive membrane, are not well adapted to measurements in liquids of high cosity. Electrodes of this type have been used continu for 6 months in routine measurements, where they have placed electrodes of the ordinary bulbular form which broken on the average of once a week.

RECEIVED June 17, 1937.

A Buret-Filling Device for Portable Reagent Reservoirs

NEIL E. RIGLER
Bureau of Plant Industry, U. S. Department of Agricultur
Austin, Texas

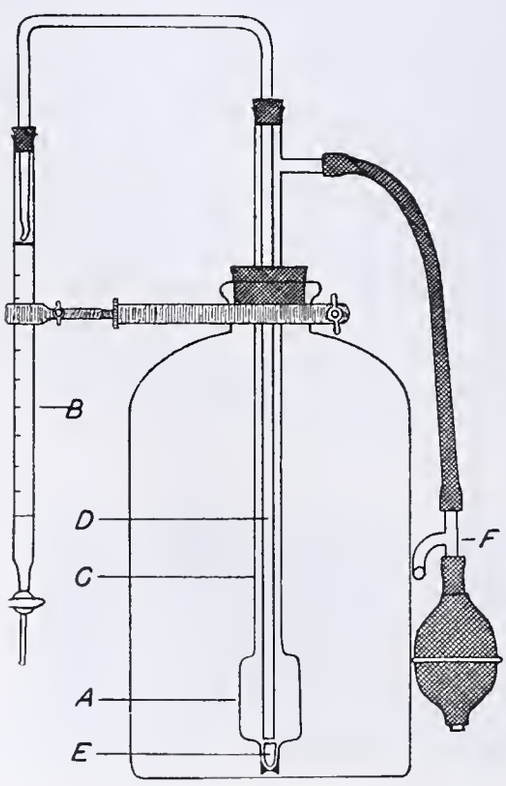

THE use of compressed air for filling burets with reagents f portable containers is limited to reservoirs of a capacity w requires frequent filling. The device presented has the advan that it can be adapted to bottles of any size, and the buret ca filled by the use of a small amount of air affected only to a negli extent by the solution level in the bottle.

The diagram shows the construction of the accessory which is use this laboratory in 20-liter (5-gallon) bottles. The bulb, *A*, at the bot of the bottle has a capacity slightly greater than that of the buret, *B*, is of a diameter as large as the neck of the bottle will allow; this fa tates a more complete withdrawal of solution from the bottle. It is se to a tube, *C*, of a size which permits the entrance of the delivery t *D*, carrying the solution to the buret. The valve, *E*, is made by grin a glass rod into a seat obtained by sealing 4-mm. tubing to the b The ground portion of the glass rod is broken to a 6-mm. (0.25-inch) le and inserted into the ground seat. The delivery tube is adjusted so th prevents the valve from rising too far and becoming unseated.

The small stopper in the buret and the large one in the bottle sh each carry a small opening to permit the passage of air.

The side arm of the T-tube, *F*, immediately above the pressure bu bent both towards the bulb and forward to facilitate closing with the th when pressure is applied. One squeeze is sufficient to fill the buret.

RECEIVED August 7, 1937.

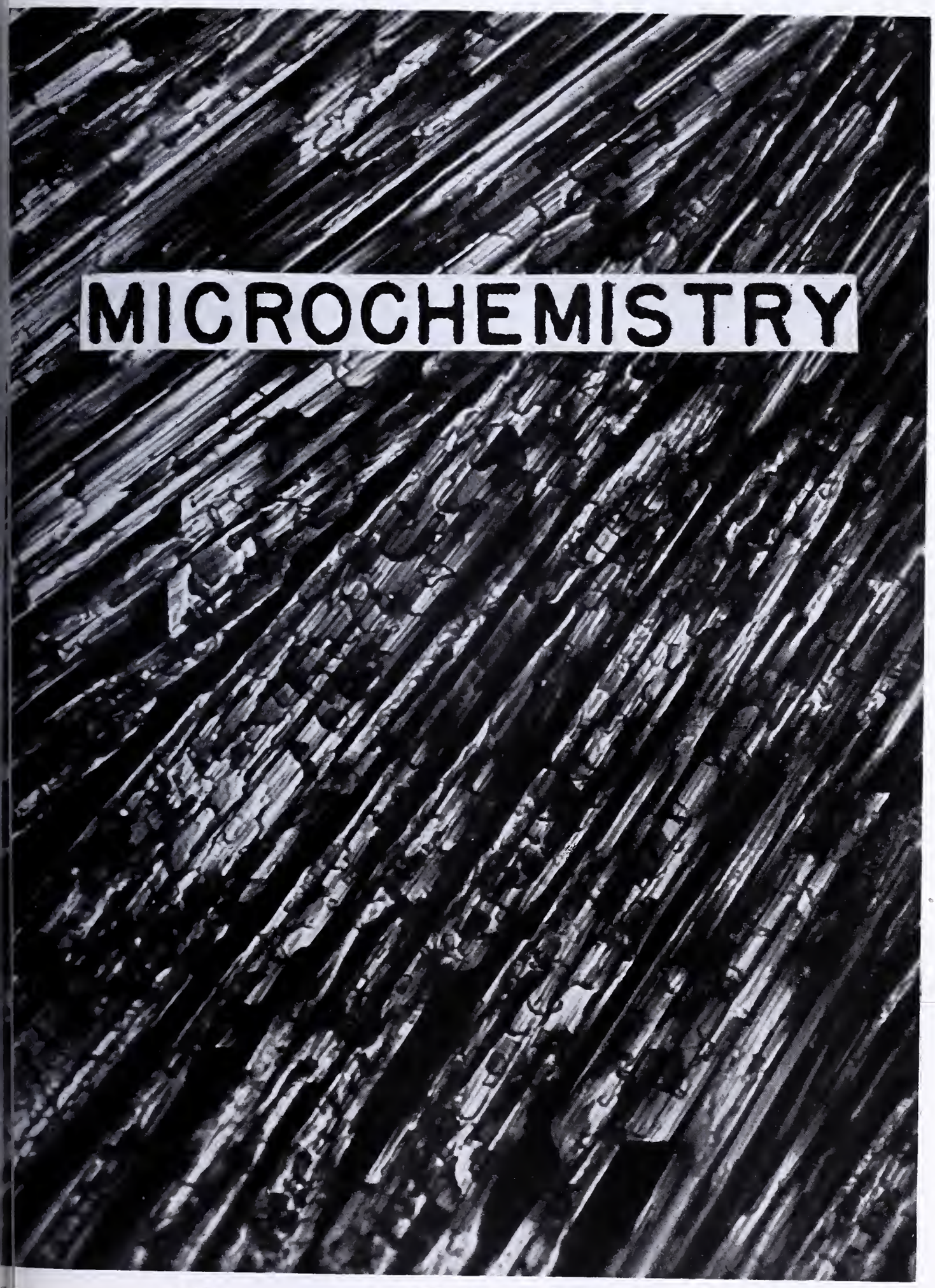

Courtesy, J. R. Rachele and J. T. Bryant

Hydroquinone in Polarized Light

Determination of Chloroform Extract of Beet Leafhopper

A Micromethod

ROBERT A. FULTON

Bureau of Entomology and Plant Quarantine, U. S. Department of Agriculture, Columbus, Ohio

N CONNECTION with certain nutritional studies of the beet leafhopper, *Eutettix tenellus* (Baker), it was desired to ermine the chloroform-soluble components, or extractives, he insect as an aid in judging the amount and nature of eserve energy. Owing to the small size of the beet leaf- per (maximum weight 1.2 mg., females; minimum 0.7 , males) and to the necessity of working with small samples sometimes with single insects, a micromethod was re- ed.

he method devised is an empirical one and the results are alue for comparative purposes only. Any deviation in the nic described alters the results.

Apparatus

he apparatus[1] (Figure 1) is a modification of the regular y-Soxhlet extractor, reduced in size to permit extraction individual and small numbers of insects and to eliminate ssive glass surface, which would hold film of oils difficult emove by continuous extraction. It is made entirely of -resisting glass.

standard-taper ground-glass joint is used in the construction e apparatus to permit the use of several receivers with one enser. The extraction thimble, *E*, is approximately 4 mm. side diameter and 15 mm. long, and has a small outlet in the m to permit the chloroform extract to pass to the receiver, A thin layer of long-fiber cotton is placed in the thimble to ent the fine material from passing to the receiver. A small of glass is fused to the top of the thimble for suspension from condenser. The condenser, *C*, consists of a water jacket d into the male portion of the ground-glass joint, surrounding e, *A*, through which the water enters. The water is forced tly to the lower end of the condenser. The returning water moved through the side arm, *H*. The receiver, *F*, is made the thin-walled tubing attached to the female portion of the nd-glass joint.

e extraction thimbles have a maximum weight of 1 gram, the receivers a maximum weight of 8.5 grams. This load its weighing on the microbalance with satisfactory precision. microbalance used in this work was constant in sensitivity 0 to 12 grams.

unterpoises with approximately the same surface as the ver are used to compensate for any humidity change g the extraction. It has been found that high humidities (above 50 per cent at 23.89° C., 75° F.) interfere with the determination because of the hygroscopic nature of the insect material. Low humidities that are usually found in the desert regions are ideal for the performance of the method.

[1] nce the development of this method, two extractors have been de- d, which are applicable to biological problems (*1*, *2*).

TABLE I. CHLOROFORM EXTRACTIVES OF BEET LEAFHOPPERS COLLECTED IN SOUTHERN IDAHO, 1931

Date	Locality	Host Plant	Chloroform Extractives %
May 20	Mountain Home, Elmore County	*Sophia parviflora*	34.9, 34.5, 34.7, 34.6
May 20	Glenns Ferry, Elmore County	*Sophia parviflora*	35.4, 35.5, 35.1, 35.4
July 8	Oakley, Cassia County	*Beta vulgaris*	42.4, 42.6, 42.1, 42.3
July 14	Shoshone, Lincoln County	*Salsola pestifer*	36.2, 36.4, 36.0, 36.3
July 14	Pocatello, Bannock County	*Salsola pestifer*	38.7, 39.0, 38.5, 38.8
July 14	Adelaide, Minidoka County	*Salsola pestifer*	39.4, 39.5, 39.2, 39.4
July 14	American Falls, Power County	*Salsola pestifer*	39.2, 38.8, 39.0, 39.3
October 8	Roseworth, Owyhee County	*Artemisia tridentata*	42.7, 42.6, 42.4, 42.5

The use of the apparatus may be best illustrated by a description of a typical extraction.

The thimble is first extracted for 1 hour to remove any loose fragments of cotton fiber. The thimble and receiver are then placed in the drying oven (48° C., 118.4° F.) for 5 hours to ensure complete removal of the water film. They are removed and placed near the microbalance and allowed to stand 15 minutes for the glass surface to reach equilibrium with the moisture of the air. In regions of high humidity the reservoir and thimble must first be cooled in a desiccator.

Procedure

The weighing procedure is as follows:

The thimble is filled with the ground insect material and weighed. It is then attached to the condenser hook and 3 ml. of chloroform are put in the receiver. The apparatus is assembled, as shown in Figure 1, and placed on the steam or air bath. As

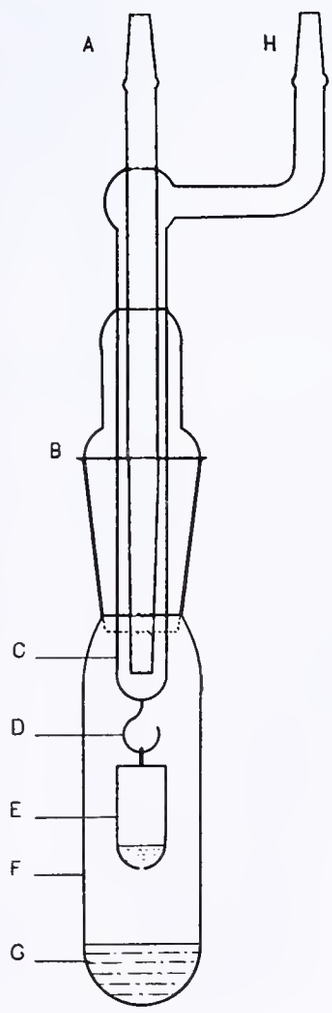

FIGURE 1. CONSTRUCTION OF MICROEXTRACTOR

A. Water inlet
B. Standard-taper ground-glass joint
C. Condenser
D. Condenser hook
E. Extraction thimble
F. Receiver
G. Solvent
H. Water outlet

soon as the vapors of chloroform begin to form, the joint is separated to allow the air to escape. When the small droplets of chloroform appear near the glass joint, it is closed for the duration of the extraction. After 16 hours, the receiver and thimble are removed from the condenser and again placed in the drying oven. At the end of 5 hours they are removed and allowed to cool 15 minutes before being weighed. The weight of the extracted insect plus the weight of the extract is used as a check on the original total weight of the insect.

Large numbers of beet leafhoppers were collected from localities in south-central Idaho with especial reference to host plant and its condition. The insects were killed immediately with a minimum dose of cyanide and placed between sheets of crepe paper to dry. This method of collection has been found to be the most satisfactory where samples must be transported over rough desert country. After their sex had been determined, the insects were dried (at 48° C., 118.4° F.) for 24 hours, as this period had been found to give const weight of the insect material.

Table I shows a series of determinations made from e localities in southern Idaho in which four different host pl were involved—namely, flixweed (*Sophia parviflora*), su beet (*Beta vulgaris*), Russian thistle (*Salsola pestifer*), sagebrush (*Artemisia tridentata*). Five females were u for each analysis reported. All percentages are based on dry weight of the insect.

Literature Cited

(1) Gorbach, G., *Mikrochemie*, **12**, 161 (1932).
(2) Titus, L., and Meloche, V. W., Ind. Eng. Chem., Anal. Ed 286 (1933).

Received April 30, 1937.

Determination of Coumarin and Melilotic Acid

A Rapid Micromethod for Determination in Melilotus Seed and Green Tissue

WILLARD L. ROBERTS AND KARL PAUL LINK
Department of Agricultural Chemistry, University of Wisconsin, Madison, Wis.

ATTEMPTS to improve the agricultural usefulness of common sweet clover (Melilotus) by selecting and breeding varieties low in coumarin have been impeded by the lack of suitable methods for the estimation of coumarin in seed and green tissue. [Coumarin and related substances are responsible for unpalatability (bitterness). It also appears that the same class of substances is involved in the formation of the toxic principle of spoiled sweet clover hay.] The limitations of the existing methods were pointed out in a previous publication (*1*) which described a procedure for the accurate measurement of three substances in the coumarin group—e. g., coumarin, melilotic acid, and coumaric acid. This method is, however, impractical for the routine assay of large plant populations.

In the method described here the authors have achieved a substantial reduction in the size of the sample and the time required for each analysis. They have also placed the entire problem of coumarin analysis of seed and green tissue on a much firmer basis by including an incubation period for the enzymatic release of bound coumarin. (The bound coumarin might be glycosidic or in other combinations.)

When the coumarin content of green sweet clover tissue or viable seeds is determined by any method involving a maceration of the tissue in the presence of water, opportunity exists for the enzymatic hydrolysis of coumarin present in the combined state. The magnitude of the coumarin figures is determined by two factors: the nature of the nonaqueous solvent used to extract the coumarin, and the length of time that lapses between the initial maceration operation and the inactivation of the enzyme system either by the solvent or through heating.

With viable seed tissue which usually contains only tr of free coumarin but substantial quantities of bound cou rin, the rate at which the enzyme system is inactivate particularly significant. The authors have found that errors incident to the analysis of seed tissue when an inc tion period is not involved can be of a high order of magnit On the other hand, in succulent green tissue free coum usually predominates. Hence the coumarin figures repo on green tissue by methods that do not employ an incuba period (*1*) probably represent very close approximation the actual coumarin content. The value of this finding necessity of the incubation period) to the geneticist atten ing to select low coumarin-bearing plants through coum

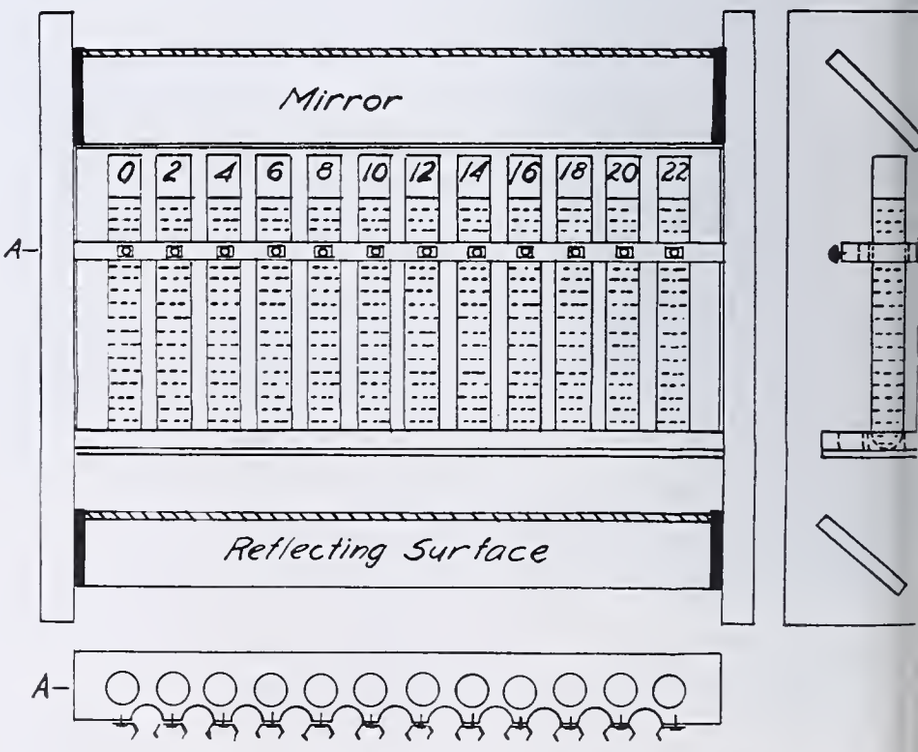

Figure 1. Color Comparator

analyses on either the green tissue or viable seed tissue is obvious. Heretofore the possibility existed that seeds classified as low in coumarin (or free from coumarin) on the basis of the direct extraction methods might actually be high coumarin-bearing and thereby all attempts to gain the desired objective by breeding experiments might be vitiated.

The essential features of the microprocedure described below are as follows:

The finely ground seeds or disks of green tissue (representing 1 to 6 mg. on dry weight basis) are incubated in an aqueous medium for 1 hour at 40° C. Coumarin and related compounds are then extracted by grinding first with a small quantity of ethyl alcohol and then with ethyl ether (peroxide-free). The ether is evaporated from the filtered extract and the remaining alcoholic solution is made to volume with 0.05 *N* sulfuric acid. Heating to 85°, followed by cooling and filtering, yields a water-clear filtrate which is then ready for color development with the diazotized *p*-nitroaniline solution first introduced by Clayton and subsequently employed by Stevenson and Clayton (*2*) and by Roberts and Link (*1*). The melilotic acid is measured by treating an aliquot of the aforementioned solution with alkali at 85°. After cooling, acidification closes the coumarin ring and the development of the color upon adding the diazonium solution is due to melilotic acid. Total melilotic acid and coumarin are obtained by treating another aliquot with alkali at 85° C. In this case the coumarin ring is not closed, since there is no addition of acid and the color developed upon adding the diazonium reagent is due to melilotic acid and coumarin. Coumarin is then calculated by difference.

Experimental

Apparatus. Pyrex test tubes, 15 × 125 mm. marked for 10.0 ml. Color comparison tubes, matched 13 × 100 mm. Pyrex test tubes marked for 8.0 ml. Matched Nessler tubes of the same size would be superior.

Color comparator (Figure 1), 60 × 220 × 270 mm. The comparator accommodates 12 standard tubes and carries half circles fitted with clips for holding the unknown tubes during the matching process. The tubes rest on glass and are protected from horizontal light incident to the constant light source by a white cardboard background. The light is reflected through the length of the tubes by a movable white surface below the tubes. The colors are observed in an adjustable mirror above the tubes.

Filtration assembly (Figure 2, left). Side-arm test tubes, 18 × 150 mm., fitted with small long-stemmed glass Büchner funnels of 18-mm. diameter.

Incubation tubes, mortar and pestle assembly (Figure 2, right). Pyrex test tubes, 10 × 75 mm., fitted with corks carrying small pestles prepared from 4-mm. glass rod. The length of the pestles is 150 mm., the diameter of the grinding surface 7 mm.

Solvent. Ethyl ether free from peroxides (anesthesia grade).

Reagents. *p*-Nitroaniline hydrochloride (solution *A*). Dissolve 3.5 grams of *p*-nitroaniline in 45 ml. of 37 per cent hydrochloric acid, dilute to 500 ml. with distilled water, and filter. This solution keeps indefinitely if stoppered.

Sodium nitrite (solution *B*). Dissolve 5 grams of sodium nitrite in 100 ml. of distilled water. Keep this solution in a dark bottle away from light and renew it frequently.

Diazonium solution. Thoroughly chill a 100-ml. flask and solutions *A* and *B* in chipped ice. Pipet 3 ml. of solution *A* and 3 ml. of solution *B* into the flask, chill for 5 minutes, add 12 ml. of solution *B*, mix, chill for another 5 minutes, fill to the mark with ice-cold distilled water, mix, and place in chipped ice for 15 minutes before using. If kept in ice this solution remains stable for at least 24 hours.

Preparation of Color Standards. Add standard coumarin solution (an aqueous solution containing 4 gamma of coumarin per ml.) in 2-gamma increments to 12 color comparison tubes. The first tube contains 0 gamma and the last tube 22 gamma of coumarin. Next add exactly 1 ml. of 1 per cent sodium carbonate to each tube and sufficient distilled water to make a volume of about 6 ml. Mix each tube by stoppering with the finger and inverting; then place in a water bath at 85° C. for 5 minutes. Cool to room temperature and add 1 ml. of the diazonium solution drop by drop, mixing after each addition. Make to volume with distilled water, mix, and place in the color comparator. These standards should be discarded at the end of each day because of the development of a yellow color which darkens the original red shade.

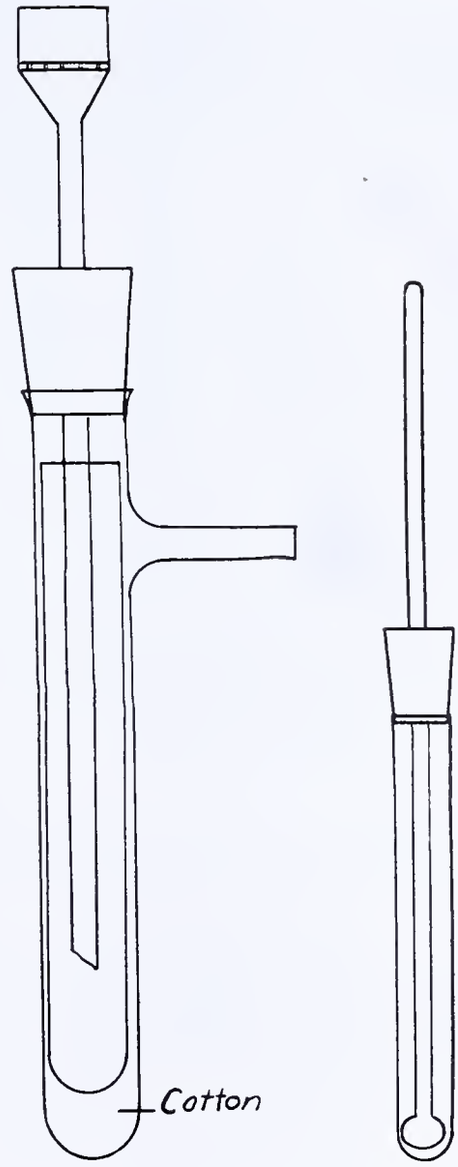

Figure 2. Filtration Assembly (Left) and Incubation Tube (Right)

Analytical Procedure. Seed sampling. Grind six or more seeds to a fine powder in a small mortar, weigh 4 mg. or less to ±0.01 mg., and transfer the weighed sample to an incubation tube containing about 0.1 gram of 70-mesh sharp-edged quartz sand. (Single seeds or portions of a seed weighing as little as 0.5 mg. may also be analyzed.) Moisture may be determined in the usual manner if the results are to be calculated to the moisture-free basis.

Green Tissue Sampling. The coumarin content varies with the stage of development of the plant and with the part of the plant from which the sample is taken. For attempts to correlate the coumarin content in green tissue with that in the seed from which the plant was grown, it is tentatively suggested that the plant should be sampled just before blossoming.

A sharp cork borer cutting 6- to 7-mm. disks can be used for the sampling. Cut single disks (eight in all) from the center of eight leaflets of fully developed leaves on the upper part of the plant. Transfer 4 disks to an incubation tube containing 0.1 gram of 70-mesh sand and thoroughly dry 4 other disks at 105° C. for the determination of the dry weight of the 4-disk sample.

Preparation of "Solution for Analysis." Add 0.1 ml. of water to the sample of seed or green tissue disks in the incubation tube, grind, and stopper by sliding the cork over the handle of the pestle. Incubate for 1 hour at 40° C., remove, and add 4 drops of alcohol. Grind, add about 1 ml. of ethyl ether, grind, and filter into the test tube marked for 10 ml. For filtration use the small glass Büchner funnel fitted with a disk of filter paper and a heavy pad of dry asbestos. Again add 4 drops of alcohol, grind,

Table I. Determination of Melilotic Acid and Coumarin in Admixture with Each Other

Substance Added		Melilotic Acid		Coumarin	
Melilotic acid	Coumarin	Found	Deviation	Found	Deviation
γ	γ	γ	γ	γ	γ
20	0	19.8	−0.2	0	0
20	1	19.8	−0.2	1	0
18	2	18.0	0.0	2	0
16	4	16.2	+0.2	4	0
12	8	11.7	−0.3	9	+1
10	10	9.9	−0.1	10	0
8	12	8.1	+0.1	12	0
4	16	3.6	−0.4	16	0
2	18	1.8	−0.2	19	+1
1	20	0.9	−0.1	20	0
0	20	0.0	0.0	20	0
2	4	1.8	−0.2	4	0
4	2	3.6	−0.4	2	0
4	4	3.6	−0.4	5	+1
8	8	8.1	+0.1	8	0

Table II. Recovery of Melilotic Acid and Coumarin Added to Plant Extract

Sample	Weight	Added Melilotic acid	Added Coumarin	Total Found Melilotic acid	Total Found Coumarin	Recovered Melilotic acid	Recovered Coumarin
	Mg.	%	%	%	%	%	%
			Green Tissue				
M. dentata 92	6.72	..	..	0.14	0.00	..	..
	6.72	0.14	0.74	0.28	0.78	0.14	0.78
Common white	5.77	..	..	0.17	1.04	..	..
	5.77	0.35	0.87	0.54	1.90	0.37	0.86
			Seed				
M. dentata 89	5.43	..	..	0.21	0.14	..	..
	5.02	0.80	0.80	0.99	1.00	0.78	0.86
Common white	5.01	..	..	0.18	1.70	..	..
	2.52	1.19	1.58	1.47	3.15	1.29	1.45

add ether, grind, and decant through the filter as before. Repeat this operation two times more and finally wash the pestle, the outer edge of the test-tube mortar, and the funnel with a small jet of ether. The total filtrate amounts to about 4 ml. Now carefully evaporate the ether by placing the tube in a water bath at 45° C. Next dilute the small amount of alcohol and water remaining in the tube to the 10-ml. mark with 0.05 *N* sulfuric acid, mix, warm to about 70° C., shake, cool, and filter with suction through a new filter prepared as above for the ether filtration. The filtrate is water-clear and constitutes the solution for analysis.

A. Determination of Melilotic Acid. Pipet a 4-ml. aliquot of the solution for analysis to a color comparison tube, add 1 ml. of 0.5 *N* sodium hydroxide, mix, and heat for 5 minutes at 85° C. Cool to room temperature, add 1 ml. of 0.5 *N* sulfuric acid, mix, and let stand at least 10 minutes to ensure complete closure of the coumarin ring. Next add 1 ml. of diazonium solution, mix, and add 0.5 ml. of 5 *N* sodium hydroxide in small drops, mixing after the addition of each drop. Make to volume, mix, and compare immediately against the coumarin standards.

B. Determination of Melilotic Acid and Coumarin. Pipet a 1- to 4-ml. aliquot (depending upon the coumarin content) of the solution for analysis into a comparison tube and, if less than 4 ml. are used, add sufficient 0.05 *N* sulfuric acid to make 4 ml. Next add 1 ml. of 7 per cent sodium carbonate, mix, heat for 5 minutes at 85° C., and cool to room temperature. Now add 1 ml. of the diazonium solution drop by drop with mixing after each addition, make to volume, mix, and compare immediately against the coumarin standards.

Calculations. Melilotic acid = $A \times 0.9$; coumarin = $B-A$. Calculate per cent on the basis of the weight of the dried disks or the ground seed and the aliquots used.

An Approximate Rapid Method for Coumarin. For rapidly classifying large populations of seeds and plants into low-, medium-, and high-coumarin groups, the procedure outlined in this paper may be further shortened.

For this purpose use a 1-mg. sample of ground seed or a single disk of green tissue (the sampler is adjusted to cut disks weighing 1 mg. when dry) from the center of a fully developed terminal leaflet of a trifoliate near the top of the plant. Grind, incubate, and extract according to the regular procedure. After evaporation of the ether add exactly 3 ml. of 0.05 *N* sulfuric acid (instead of making to 10 ml. with the same reagent), heat, shake, and filter directly into a comparison tube. Wash with exactly 1 m of 0.05 *N* sulfuric acid. Next develop the color in the enti filtrate according to determination *B*. The gamma observe divided by 10 equals per cent of coumarin and melilotic acid.

By choosing similar leaves in plants of the same age th weight of the dry disks is remarkably constant, regardless the slight variation in the moisture content. Results ob tained in this manner on tissue disks will not vary over 0.2 pe cent from the actual content, and 1-mg. samples of groun seed weighed against a 1-mg. counterpoise on a balance sens tive to 0.1 mg. show greater accuracy.

Results of Analyses

Table I shows that reliable results are realized when th method is applied to pure solutions of melilotic acid and cou marin. With a 4-ml. aliquot from a 5-mg. sample made to 1 ml., an error of 1 gamma in the color-matching process woul amount to 0.05 per cent of melilotic acid or coumarin. Th table shows, however, that an error of this magnitude is in frequent.

Table II shows good recoveries when pure melilotic aci and coumarin are added to aliquots of the solution for analy sis.

Table III shows typical results obtained on seed and o green tissue produced in a hothouse. There is good agree ment between duplicates. (The melilotic acid content o green tissue is often many fold that reported in this table, *1*.

Table III. Melilotic Acid and Coumarin Content of Green Tissue and Seeds of Melilotus and Alfalfa

Sample	Weight	Melilotic Acid	Coumarin
	Mg.	%	%
		Green Tissue (Per Cent on Dry Basis)	
Alfalfa	4.12	0.18	0.08
M. dentata AC 92	6.72	0.14	0.00
Common white A 43	5.77	0.15	0.87
Common white A 190	5.64	0.16	1.06
Common white	5.59	0.23	1.44
Common yellow[a]	5.05	0.18	1.60
		Seed (Per Cent on Basis of Entire Seed)	
Alfalfa	4.84	0.19	0.00
M. dentata annual	5.45	0.16	0.09
M. dentata AC 89	5.43	0.19	0.14
M. dentata AC 85	5.44	0.16	0.18
Common white A 43	5.02	0.27	1.10
Common white A 190	4.93	0.19	1.41
Common white	5.01	0.18	1.70
Common white	2.57	0.17	1.75
Common yellow	12.71	0.31	2.02
Common yellow	5.51	0.31	1.95
Common yellow	2.41	0.28	2.06

[a] This sample of green tissue was taken from a plant with very old leaves Most of the blossoms were gone. Earlier runs during the development o the method indicated a much higher coumarin content.

Table IV shows the course of the hydrolysis of bound cou marin, probably glycosidic. From the data it is apparent that the enzyme liberates coumarin rapidly at 40° C. Al though the reaction was complete in 30 minutes at 40° C., 1 hour at this temperature was selected as a suitable incubation period.

From a consideration of the structure and properties of coumarin and possible coumarin glycosides, it appears likely that an equilibrium between coumarin and the glycoside is not set up. The hydrolysis apparently goes to completion because of closure of the coumarin ring as the reaction proceeds. Once closed it is unlikely that the ring would open again, under these conditions, to permit glycoside formation.

Summary

A rapid microcolorimetric procedure for the separate estimation of coumarin and melilotic acid in sweet clover (green and seed tissue) is presented. The procedure is based on the production of a red dye produced by coupling coumarin and melilotic acid with a diazotized solution of *p*-nitroaniline.

The method is suitable for routine assay work in genetical

Table IV. Liberation of Coumarin in Sweet Clover Seed by Enzymatic Action[a]

Weight of Sample	Temperature	Time	Melilotic Acid	Coumarin
Mg.	*° C.*	*Hours*	%	%
5.60[b]	..	..	0.15	0.02
5.01	25	12	0.32	1.55
5.51	25	24	0.31	1.98
4.64	25	48	0.32	1.90
5.60[b]	..	..	0.15	0.02
4.76	40	0.5	0.32	1.96
4.81	40	1.0	0.32	1.92
5.07	40	1.5	0.31	1.92
4.75	40	2.0	0.32	1.95
4.83	40	3.0	0.32	1.89
4.72	40	4.0	0.32	1.90

[a] Similar ether-extraction of intact green leaf tissue indicated 0.63 per cent of free coumarin. Total coumarin obtained by inserting an incubation period showed a coumarin content of 1.43 per cent. Bound coumarin therefore amounted to 0.80 per cent.

[b] The amount of free coumarin in the seed was determined by grinding a 5.60-mg. sample with sand and ether in such a way as to remove free coumarin if present (no incubation period was employed).

studies involving the examination of a large population of green or seed tissue and requires samples of only a few milligrams.

A significant feature of the method is the inclusion of a suitable incubation period (1 hour at 40°) for the enzymatic release of bound coumarin prior to the extraction.

All heretofore reported analyses on the coumarin content of green sweet clover or viable seed tissue are inaccurate, since allowance has not been made for the bound coumarin which is readily released by enzymatic action.

Geneticists seeking low coumarin-bearing sweet clover plants have now a rapid and accurate chemical assay method for this purpose.

Acknowledgment

The writers wish to express their thanks and appreciation to E. A. Hallowell of the United States Department of Agriculture, Washington, and R. A. Brink and W. K. Smith of the Genetics Department of the University of Wisconsin for their coöperation, financial assistance, and counsel.

Literature Cited

(1) Roberts, W. L., and Link, K. P., *J. Biol. Chem.*, **119**, 269 (1937).
(2) Stevenson, T. M., and Clayton, J. S., *Can. J. Research*, C14, 153 (1936).

Received June 28, 1937. Published with the permission of the Director of the Agricultural Experiment Station. Coöperative studies with the Department of Genetics, University of Wisconsin, and the Division of Forage Crop and Diseases, United States Department of Agriculture.

A Fractional-Distillation Microapparatus

LYMAN C. CRAIG, The Rockefeller Institute for Medical Research, New York, N. Y.

The development of organic micromanipulation has been largely due to the necessity of using it in the study of rare natural products or very costly materials. It has certain advantages, such as speed, economy, etc., and also has limitations. A very serious limitation, as compared with the customary organic macroprocedures, is that of fractional distillation. Although several apparatus for microdistillation and in a degree for microfractionation (*1*, *2*) have been reported, no attempt has been made to reach the precision attained in macrowork by the use of carefully controlled packed columns, with the exception of Podbielniak's still (*4*) which requires a few cubic centimeters or more.

Since in the degradative study of certain natural products, the author has constantly been confronted with the need of more precise fractional distillation of small quantities, he has attempted to develop a more efficient apparatus. Results of the study at this point seem to justify a preliminary communication, although the work is still in progress.

Design of Apparatus

Although the principle is the same as that employed in macrocolumns, the requirements for proper execution are somewhat different. Obviously an extremely small holdup becomes necessary. This requirement, however, can be partially counterbalanced by the fact that the capacity of the microcolumn can be extremely small and proportionately small reflux is thus required. Bearing in mind these factors, the apparatus shown in Figure 1, designed for volumes of 0.5 to 2.0 gram of material, has been devised. When approximately 0.3 gram of distillate was collected per hour, it gave a separation of benzene–carbon tetrachloride mixture corresponding to approximately 8 theoretical plates according to the method of Fenske and co-workers (*3*). It has a holdup (weight of material in apparatus when distilling flask has just become dry) of approximately 0.1 gram for these liquids, the column being 10 cm. in length and approximately 7 mm. in diameter. The apparatus (Figure 1) is constructed as follows:

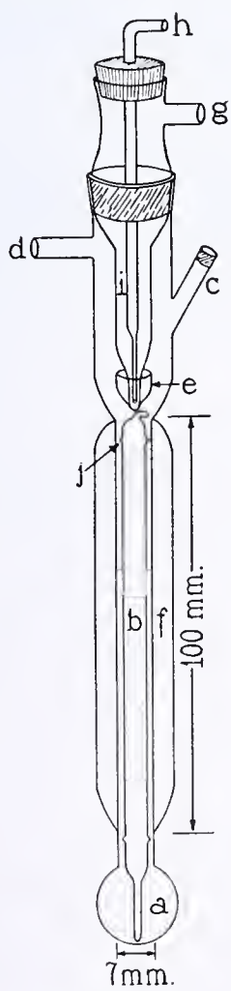

Figure 1

The distilling flask, *a*, is a round bulb of 4-cc. capacity. Into the flask is sealed a tube which is as straight as possible but very thin-walled, made by drawing out from a large tube so that it is about 7 mm. in diameter. Experiments with the standard Pyrex tubing, in which the walls are 1 to 1.5 mm. thick, have given poor results. A good explanation of this seems to be lacking and must be investigated further. This tube, which serves as the outside of the column, is surrounded by a sealed-on glass jacket, *f*, for protection and insulation. The effect of silvering and evacuating the jacket has not yet been studied. A tube 15 cm. wide and 50 mm. long is sealed to the upper end of the column and has a ground-glass joint at its upper end, through which extends the condenser, *i*. This tube has an outlet tube, *d*, for evacuating when reduced pressure is used, and another outlet tube, *c*, fitted with a small ground-glass stopper.

The condenser, *i*, carries a rubber stopper at its top, through which extends a glass tube, *h*, for the entrance of water into the condenser, the water leaving the condenser through the exit tube, *g*. The lower end of the condenser tube is drawn out into a rather narrow thin tip which has sealed on its end a cup, *e*, which holds approximately 0.2 cc. Liquid condensing on the upper part of the condenser will run down and be caught in the cup, where it can easily be withdrawn through tube *c*, when a fraction is desired, by means of a small pipet. The inside part of the column is represented by *b*, which is a very thin-walled tube, sealed at both ends, of shape represented. It is not attached to the rest of the apparatus and can be removed at will by a small

glass hook at its top. Its lower, drawn-out end rests on the bottom of flask *a* and the upper part is held away from the outside part of the column at a distance of about 1.5 mm. by six tiny glass nipples, 1.5 mm. long, which are sealed on the surface of tube *b*. The outside diameter of *b* must therefore be approximately 4 mm. in order to give the necessary 1.5-mm. clearance all around.

Heat is supplied to flask *a* by means of a small oil bath, which is kept constantly stirred mechanically with a small air-driven motor. A thermometer in the oil bath is the only measure of temperature possible for low-boiling liquids with this apparatus. Experiments with a tiny thermocouple at the top of the column were not promising.

The liquid to be fractionated is inserted with a pipet through the top of the apparatus before the inside part of column *b* is put in place. The temperature of the oil bath is then slowly raised until the ring of condensing liquid at the top of the vapor just reaches the tip of cup *e* or the top of the column. To do this, it is necessary to adjust the temperature of the oil bath to ± 0.5°. Material will then slowly diffuse from the ring of liquid through the vapor phase up to the upper part of condenser *i* and then run down to cup *e*. In this way approximately 0.3 gram of liquid can be obtained in an hour, and this has been found by experiment to be about the capacity of the still for maximum fractionation with carbon tetrachloride–benzene mixtures. When run more quickly than this, the efficiency of the still was rapidly affected.

When operated in the way described, the inside part of the column gets its reflux from material condensing on the outside of cup *e* and a thin film of liquid accordingly runs down over the entire surface of *b*. In the corresponding way the outside part of the column gets its reflux from the top, this being exposed to the air just above jacket *f*. A uniform flow of liquid is thus furnished to the entire inside surface of the outside part of the column.

In fractionating a mixture, arbitrary fractions are withdrawn by means of a capillary pipet through *e*, and the boiling point, refractive index, etc., are taken on each fraction by well-known micromethods.

For maximum operation there must be a small, constant temperature gradient between the inside part of the column and the immediate outside atmosphere. This gradient would be too large for high-boiling liquids, too much condensation would occur at the top of this column, and flooding would result. Too large a vapor velocity would be necessary to supply the reflux and the efficiency of the column would drop rapidly.

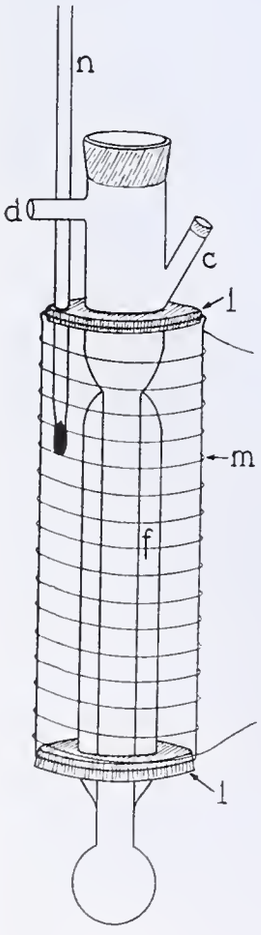

FIGURE 2

To overcome these difficulties, the apparatus is placed in a glass tube of approximately 3.5-cm. inside diameter which reaches from a point at the base of *c* to the lower part of jacket *f*, as shown in Figure 2. The glass tube is held in place on the apparatus by means of thin cork, 1, cut accordingly. The outside of the glass tube is wrapped with a suitable amount of Nichrome wire, *m*, so as to serve as a heating unit and is attached to a variable resistance. A thermometer, *n*, passes through the cork at the top of the glass tube and is thus suspended between jacket *f* and the glass tube. In this way the still can easily be maintained at a temperature best suited for its maximum performance.

Tests on Synthetic Mixtures

In order to be sure of the value of a fractionating column, actual tests on the separation of synthetic mixtures are necessary. Figure 3 represents graphically some of the many tests made. The first mixture (mixture I) was a 50 per cent by weight mixture of chlorobenzene and toluene. These two

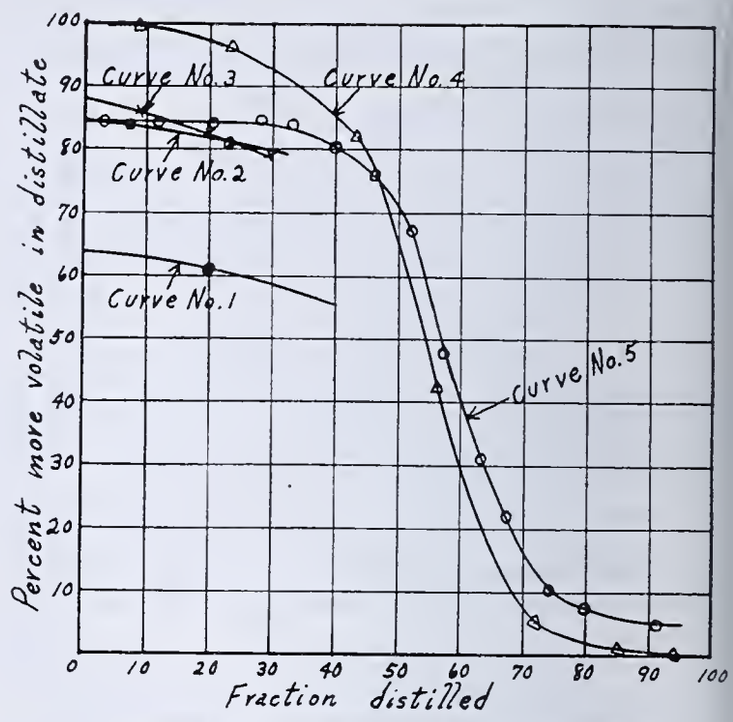

FIGURE 3. TESTS ON SYNTHETIC MIXTURES

1, 2, 3, 4. Mixture I
5. Mixture II

liquids boil 21° apart. An ordinary distilling flask gave the result represented by curve 1 (Figure 3). Curve 2 is the separation given by a Vigreux column 18 cm. in length. Curve 4 is the separation given by the distillation apparatus described and illustrated in Figure 1 (10-cm. column), and curve 3 is the separation given by this column when the center stick (*b*, Figure 1) is removed from this column. All analyses given in this paper were made by the refractive index method and all the results are easily reproducible. Check runs on all the separations have been made.

In order to give a complete picture of a separation, the data of Table I are presented. For this distillation 1 gram of a 50 per cent mixture by weight of carbon tetrachloride–benzene (mixture II) was used. Amounts are given by weight rather than the customary mole fraction because the organic chemist is more interested in the relative weights. The separation was made in a still as described, except that the column was 22 cm. in length.

TABLE I. DISTILLATION DATA

Fraction	Weight	Time	Temperature of Oil Bath	Temperature of Column Jacket	Refractive Index	Per Cent More Volatile
	Gram	*Min.*	*° C.*	*° C.*		
1	0.070	14	86–7	42.5	1.4678	84.5
2	0.080	10	86.5–87.5	42.5	1.4678	84.5
3	0.100	12	87–87.5	42.5	1.4680	84.0
4	0.060	15	86.5–7	42.0	1.4676	85.0
5	0.050	14	87.5–8	42.0	1.4681	84.0
6	0.075	10	89–90	43.0	1.4706	80.0
7	0.055	12	90	43.0	1.4726	76.0
8	0.055	12	90–3	43.5	1.4767	67.5
9	0.060	7	93	44.0	1.4851	48.0
10	0.050	8	93–93.5	44.0	1.4910	31.0
11	0.050	10	93.5–94	44.0	1.4937	22.0
12	0.070	9	94–6	44.0	1.4962	10.5
13	0.050	10	96–8	44.0	1.4968	7.5
14	0.150	Residue in still		....	1.4974	5.0
	0.975	143				

These data, when represented graphically, give curve 5, Figure 3.

A study of the literature concerning macrofractionating columns reveals the fact that efficiency curves are always given for relatively small molecules and at atmospheric pressures. Most substances encountered by the organic chemist in laboratory work are larger molecules where it is necessary

o use reduced pressure. With this in mind, a study of the ehavior of this type of column under greatly reduced pres- ure is under way. Part of the data will be presented here.

The first mixture studied was methyl laurate–diphenyl ether nixture III). With the column as described (22 cm. in ngth), very poor separations were obtained and the liquid id not appear to wet the glass surfaces of the column but ollected in globules. When, however, the walls of the column nd of the outside surface of the inside column were lined with coil of No. 35 Nichrome wire similar to the column of Pod- ielniak (*4*), approximately 6 turns per cm., a uniform film f descending liquid was spread over the surface and curve 1, igure 4, was obtained when the distillation was done under .20-mm. pressure and 1 gram of the mixture was used. An rdinary distilling flask gave with this mixture and under this ressure a distillate containing 67 per cent of the more volatile. Vithout the center part of the column (*b*, Figure 1), curve 2 as obtained, thus again confirming the desirability of the enter part (*b*, Figure 1) of the column. The results obtained ith this mixture were duplicated by the results obtained ith a 50 per cent mixture of α-chloronaphthalene and methyl urate.

Curve 3, Figure 4, was obtained by distilling 1 gram of a ixture of 50 per cent α-chloronaphthalene and diphenyl ether nixture IV) under 0.2-mm. pressure. This mixture, when stilled from a distilling flask under 0.2-mm. pressure, gave distillate containing 52 per cent of the more volatile and the vo components appear to form a constant-boiling mixture milar to carbon tetrachloride–benzene at approximately 95 er cent of the more volatile, as the column refused to give rther separation when a mixture of this composition was stilled. With this curve and with the curve for mixture the more efficient separation was obtained with the last rt of the distillation—the bottoms.

Curve 4 represents the separation obtained when mixture was fractionated at 60-mm. pressure. An ordinary distilling flask gave, under 60-mm. pressure, a distillate containing not more than 50.3 per cent of the more volatile.

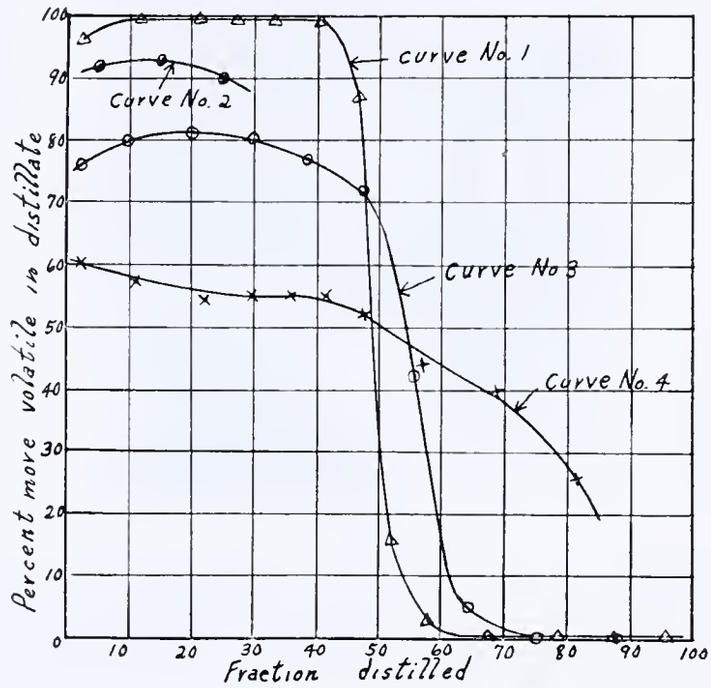

FIGURE 4. TESTS ON SYNTHETIC MIXTURES
1, 2. Mixture III
3, 4. Mixture IV

Literature Cited

(1) Craig, L. C., IND. ENG. CHEM., Anal. Ed., 8, 219 (1936).
(2) Emich-Schneider, "Microchemical Laboratory Manual," 2nd ed., New York, John Wiley & Sons, 1932.
(3) Fenske, M. R., Quiggle, D., and Tongberg, C. O., IND. ENG. CHEM., 24, 408 (1932).
(4) Podbielniak, W. J., *Ibid.*, Anal. Ed., 5, 119 (1933).

RECEIVED May 11, 1937.

Removal of Static Charges from Glassware

Using a High-Frequency Discharge

F. W. VAN STRATEN AND W. F. EHRET, Washington Square College, New York University, New York, N. Y.

MOST analysts have at some time or other had to cope with disturbances in weighing due to the presence of atic charges on glassware. The present authors experi- ced such difficulties when it became necessary to weigh eviously wiped glass-stoppered flasks of about 30-ml. pacity. Although the wiping always left a charge on the sk, it was only occasionally found objectionable. The ual 10-minute period of waiting before weighing was ap- rently sufficient on ordinary days to allow most of the arge to leak off.

Marked disturbances were noted on certain clear, dry days en the humidity was low. On these days the flask re- ined a high charge for as long as 35 minutes, and the ir- gular excursions of the balance pointer indicated that the sk was either increasing or decreasing in weight. The re- lts reported below show that the authors' flask, when arged, sometimes gained approximately 1 mg. in weight; is was gradually lost as the charge leaked off. On the other nd, there were times when the presence of a charge caused e vessel to weigh less than normally. Change in temperature of the vessel, due to rubbing, cannot be held to account for the change in weight since, before weighing, the flask was always permitted to stand at least for 10 minutes just outside the partly open balance door.

The methods suggested in the literature for removing charges from objects to be weighed are relatively few and all but two were proved unsatisfactory under the authors' conditions. These two methods were not tested, since they involve (1) introducing a radioactive material (*3*) into the balance case and (2) humidifying the laboratory air (*1*). The first procedure seemed to involve the risk of having an active deposit form on parts of the balance; the second required expensive apparatus or considerable attention. Gamma radiations, from radioactive substances enclosed in capsules, were also not tried because of the danger involved in the continued exposure to uncontrolled amounts of radiation. The authors believe, however, that controlled methods involving radioactive substances can be satisfactorily employed, although no details appear in the literature. One well-known method of removing charges from objects, that

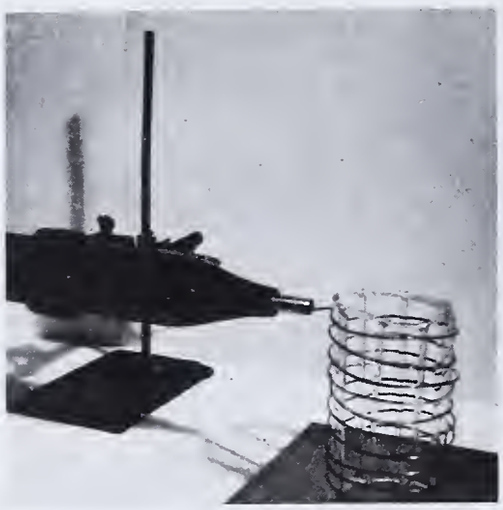

FIGURE 1

of heating momentarily to a high temperature, could not, unfortunately, be used in the present case because of the uncertainties involved in heating a flask containing a thermolabile hygroscopic material.

High-Frequency Discharge Apparatus

Since the known methods seemed unsuitable, a new procedure for discharging glass and similar nonconducting vessels was devised. The charged vessel is held in a region of silent discharge for a fraction of a minute, during which it becomes completely discharged. In the case of the flasks used in the authors' analyses, a helix of copper wire (Figure 1) of diameter sufficient to accommodate the flask was found a satisfactory means of setting up a zone of high-frequency discharge. The helix was set up on a frame of glass rods with its axis normal to a grounded metal plate. The most effective shape and size of the discharging zone will necessarily be determined to some extent by the shape of the vessel to be discharged. Thus an absorption tube of the type used in microanalysis required only to be held between two conducting strips, 4 × 20 cm., separated by about 2.5 cm. of air space. The one strip was connected to the high-frequency coil, the other to the ground. High-frequency currents were obtained from a compact device often employed in the laboratory as a leak detector in high-vacuum lines, and listed in recent apparatus catalogs as a "high-frequency vacuum tester." A silent discharge due merely to high tension—as, for example, that given by an induction coil capable of producing a 2.5-cm. spark between points in air—does not remove static charges from glassware nearly as effectively as the high-frequency discharge. The latter discharge has no significant effect upon the temperature of a glass object. A precision thermometer, kept in the discharge for 1 minute, altered in temperature by less than 0.01°.

Macroweighings

Table I epitomizes the results of a number of attempts to weigh the same flask in both the uncharged and discharged (after charging) condition and indicates clearly that the method of discharging is completely satisfactory. Before each successive weighing in the latter part of the table, the flask was charged by rubbing, and then the charge was completely removed from the vessel, yet no additional systematic or accidental errors were introduced.

In using the proposed method for discharging glass or other vessels, it is advisable to have on hand a small pith ball (3 mm. in diameter) suspended by a silk thread. This, or simpler, a frayed-out piece of silk thread, will act as a charge detector. Every portion of the "discharged" vess should be brought near the pith or silk fibers. If any a traction is noted, the vessel should be subjected to the siler discharge for perhaps 15 seconds longer, this time in such position that the part still charged will be in the most i tense zone of the discharge. Uneven or irregular steps i the excursions of the balance pointer are the best indic tions (provided the vessel is in temperature equilibrium that the vessel is too highly charged to permit accura weighing. A vessel may be charged to a slight extent, indicated by pith balls or silk fibers, and still permit accura weighing. Twelve experiments carried out on six differe days showed that a slightly charged flask allows regul swinging of the pointer and gives a weight which agre within the limits of experimental error (0.00005 gram) wi the weight of the uncharged flask. The latter is one th has stood in the laboratory until it has come to equilibriu so far as temperature and charge are concerned. It pr duces no movement of a pith ball or a silk fiber when broug within a distance of 1 mm.

TABLE I. ACTUAL WEIGHTS OF FLASK BEFORE CHARGING AN AFTER DISCHARGING

Condition of Flask	Date	No. of Successive Weighings	Average Weight	Average Deviation
			Grams	*Gram*
Uncharged	3/12	4	16.22879	0.000020
	3/13	4	16.22882	0.000035
	3/18	4	16.22882	0.000025
	3/23	1	16.22887	.....
Discharged (after charging)	3/12	4	16.22874	0.000050
	3/16	4	16.22909	0.00015
	3/17	4	16.22888	0.000050
	3/25	4	16.22894	0.000028
	3/15	1	16.22888	.....
	3/23	1	16.22899	.....

Microweighings

Disturbances due to electrostatic charges on glasswa seem to be relatively greater on the microbalance than c the ordinary analytical balance. In order to test the effe tiveness of the high-frequency method of charge remova the authors selected a standard piece of glassware—t ordinary C—H absorption tube of the Pregl type—known give occasional difficulties because of accumulated stat charge. A Kuhlmann balance of the older type, with o dinary reading glass, was used. The technic of handli and wiping the absorption tube was practically the same suggested by Hayman (*1*), the tube being kept for 10 mi utes outside the balance case and 5 minutes inside the ca before weighing. As has been reported a number of time it was occasionally impossible to make satisfactory weighin under these conditions because of the electrostatic attra tion or repulsion between the glass tube and the balan parts, particularly the pan. In these instances it was foun that holding the charged tube in a high-frequency discharg for 15 seconds was sufficient to remove all trace of charge an permit satisfactory weighing.

Table II compares a series of weighings of an absorptio tube that has stood in the laboratory overnight with anoth series for the same tube after wiping (and thus charging) an discharging as above. As usual, the "weight" is given i comparison to a counterpoise. The gain in weight is to b attributed to temperature change and perhaps to oth factors not known. Small temperature fluctuations (<1 may be responsible for changes of this magnitude, as ha been shown by the thoroughgoing experiments of Schwar Bergkampf (*2*).

Table III gives the results of another series of repeated weighings of an absorption tube that had acquired charge due to wiping and was then discharged by holding in the high-frequency field for 30 seconds.

The weights (against tare) were reproducible in each case to less than 2 gamma, showing that little change was taking place while weighings were carried out. Larger changes were noticed from run to run and these are attributed primarily to fluctuations in laboratory temperature (±2°), even though correction was made for changes in zero point of the balance. The variations in weight are sufficiently low to make the method of handling, wiping, and discharging satisfactory for many routine organic microanalytical procedures. The authors believe that a more careful control of temperature will reduce these variations, their own experience having indicated that, using a newer type of Kuhlmann balance (with telescope attachment) and with temperature control of ±0.5° in the room and balance case, it is possible to reduce the average deviation of repeated weighings of the same object to 0.5 gamma and, when wiping and waiting intervened, to 2.0 gamma.

Table II. Effect of Discharge on Microabsorption Tube

Treatment	No. of Weighings	Average Weight of Tube *Mg.*	Average Deviation *Mg.*
None	4	1.453	0.0026
Wiping and discharging	4	1.469	0.0012

Table III. Reproducibility of Weighings of Vessel after Discharge

Series	No. of Weighings	Average Weight of Tube *Mg.*	Average Deviation *Mg.*
1	4	1.234	0.0015
2	4	1.247	0.0017
3	4	1.244	0.0017

Summary

A generally applicable method is proposed for removing electrostatic charges from glassware prior to weighing. It employs a high-frequency discharge which is easily obtainable in most laboratories. By modifying the size and shape of the electrodes a zone of discharge may be obtained that will accommodate and, in less than a minute, completely discharge ordinary glass vessels such as those used in macro- and microanalysis.

Acknowledgment

The authors wish to acknowledge many valuable suggestions on the part of their colleagues, Joseph Niederl and Victor Niederl, whose wide experience with microanalysis has brought them into close contact with many of the difficulties mentioned in this paper.

Literature Cited

(1) Hayman, Ind. Eng. Chem., Anal. Ed., 8, 342 (1936).
(2) Schwarz-Bergkampf, *Z. anal. Chem.*, 69, 321 (1926).
(3) Siepermann, *Chem.-Ztg.*, 32, 408 (1908).

Received June 17, 1937.

Colorimetric Microdetermination of Manganese

C. P. SIDERIS, Pineapple Experiment Station, University of Hawaii, Honolulu, Hawaii

The amount of manganese in soil or plant extracts or in the ashes of plant tissues is determined colorimetrically with the formaldoxime reagent of Denigès. The presence of iron interferes with the determination, forming a purple coloration. This is eliminated by the addition of sodium cyanide, with which iron produces a faint greenish yellow coloration. The addition to the standard of approximately the same amounts of iron as in the unknown masks the greenish yellow color, and highly accurate determinations of manganese can be made.

DENIGÈS (*1*) described in 1932 a highly sensitive reagent for the qualitative detection of metals of the iron and manganese groups, but did not carry his studies to the point where the reagent could be adopted for the quantitative determination of either one or both elements. The reagent, a formaldoxime, is prepared by mixing trioxymethylene with hydroxylamine. When it is added to an alkalinized solution containing iron a purple coloration develops gradually. The color obtained in alkalinized solutions with manganese is wine red and develops instantaneously.

Studies on the conditions influencing the development of color with iron salts have shown that atmospheric oxygen and time are essential factors. The development of color with iron salts proceeds with time from the surface to the bottom of the solution in the test tubes, suggesting an oxidation-reduction reaction. The rate of color development can be speeded by agitating the solution vigorously. Similar tests with manganese salts have indicated that, in the course of 8 hours, either time or oxidation factors were of little or no influence in the development of color.

Various tests have indicated that the speed of iron reactivity with the reagent for the production of color can be blocked or partly inhibited by sodium cyanide, by ammonium tartrate, and by any other such substances with which iron forms double salts. The addition of either sodium cyanide or ammonium tartrate to the solution of iron salts causes the formation of a faint yellowish green pigment, characteristic of the double salts of iron, which interferes with the determination. Attempts to eliminate this color from the solution were fruitless. The difficulty was overcome by adjusting to equal values the amounts of iron in the unknown and in standard samples. This was accomplished by adding ferric iron to the standard solution in amounts equal to those obtained after chemical analysis of the unknowns with the *o*-phenanthroline method of Saywell and Cunningham (*2*). Using this technic, thoroughly satisfactory results were obtained.

Determination of Manganese

The procedure for the determination of manganese in plant tissues or soil extracts in the presence of iron is as follows:

A quantity of plant tissues containing 0.010 to 0.050 mg. or more of manganese is ashed, taking care that iron is completely oxidized during ashing to Fe^{+++}. The ash is dissolved in 2 to 5 ml. of 0.077 *N* hydrochloric acid. The solution is filtered, the filter paper is washed with water, and the solution is then made to 25-ml. volume.

The rest of the procedure varies with the amounts of manganese and iron in the solution. If the solution contains more than 0.020 mg. per ml. of manganese, further dilution is necessary. Before proceeding with the determination of manganese the amounts of iron in the unknown are estimated, using the *o*-phenanthroline (*2*) or any other reliable and convenient method.

The rest of the procedure is as follows:

To 10 cc. of the unknown 0.25 ml. (about 5 drops) of a solution of 40 per cent potassium hydroxide is added and stirred with a glass rod. Then 0.50 ml. of a solution of 20 per cent sodium cyanide is added to the mixture. After mixing again, 3 drops of the formaldoxime reagent are added and the contents are agitated. A wine-red color develops immediately with an intensity directly proportional to the amount of manganese in the solution. Standard solutions employing three different concentrations of manganese—namely, 0.002, 0.008 and 0.012 mg. per ml.—must be on hand and prepared in the same way as the unknowns. Such standard solutions must contain amounts of iron approximately equal to the unknown, which are added to the standards from a stock solution containing 0.100 mg. of Fe^{+++} per ml. A 5 per cent solution of gum Ghatti (0.5 ml.) is added to the standard and unknown solutions to prevent adsorption of the pigment to the colloidal suspensions formed after the addition of potassium hydroxide.

After adding all the reagents, both the standard and unknown solutions are allowed to stand for about 20 minutes and then the color is read in the colorimeter.

Results

The results obtained from a series of determinations of solutions with different amounts of manganese, employing different concentrations of manganese standards, are reported in Table I.

Table I. Controls for Colorimetric Determination of Manganese

(With the use of Denigès reagent in solutions free from iron. The standard solutions contained the following quantities of manganese per ml.: A, 0.010 mg.; B, 0.005 mg.; C, 0.001 mg.)

Manganese Taken, γ	Manganese Found: Standard A γ	Standard A No. of detns.	Standard A Error, %	Standard B γ	Standard B No. of detns.	Standard B Error, %	Standard C γ	Standard C No. of detns.	Standard C Error, %
20	20	1	0	..	...	..	..	...	..
15	15	1	0	..	...	..	..	...	..
10	10	1	0	11.5	4	11.5	..	...	..
8	..	...	..	8.0	2	0	..	...	..
7.5	7.5	1	0	7.5	3	0	..	...	..
6.0	..	...	..	6.2	2	3	..	...	..
5.0	4.6	1	8	5.0	4	0	6.5	2	13
4.0	3.6	1	10	4.0	2	0	4.0	3	0
3.0	2.7	1	10	2.9	3	8	3.0	3	0
2.0	1.7	1	15	2.0	2	0	2.0	3	0
1.0	..	...	..	0.9	3	10	1.0	3	0
0.5	..	...	..	..	...	..	0.5	3	0
0.25	..	...	..	..	...	..	0.25	2	0

In accordance with the data in Table I, very accurate results can be obtained only when the concentration of the standard is neither appreciably greater nor smaller than that of the unknown solution. In view of this condition, three to four manganese standard solutions with concentrations of from 1 to 20 gamma of manganese must be employed to cover the entire range of concentrations of manganese of the unknowns. Variations in the iron content between manganese standards and samples of unknowns must be reduced to a minimum, as the greenish yellow color of the ferricyani salt interferes with the accuracy of manganese determinatio With a proper adjustment of the amounts of iron in t standard and unknown solutions, the results obtained a very accurate, as shown in Table II. The magnitude of t error, which may result in the determination of differe amounts of manganese between solutions containing 5 a 20 gamma of iron, respectively, ranges from 5 to 15 per ce as Table III shows. This error is mainly due to a great intensity of the greenish yellow color of the ferricyanide s and not to that of the wine-red color of the manganese co plex pigment. However, such errors can be easily avoid if the instructions are properly observed.

Table II. Controls for Colorimetric Determination Manganese

(With the use of Denigès reagent in solutions containing iron. The standa solutions contained the following quantities of manganese per ml.: A,0.0 mg.; B, 0.005 mg.; C, 0.001 mg.)

Manganese Taken, γ	Manganese Found: Standard A[a] γ	Standard A Error, %	Standard B[a] γ	Standard B[a] Error, %	Standard B[b] γ	Standard B[b] Error, %	Standard C γ	Standard C Erro %
20	20	0	..	..	..	..	..	..
15	15	0	16.5	10	16.5	10	..	..
10	10	0	10.0	0	10.0	0	..	..
7.5	7.5	0	7.5	0	7.5	0	10.0	25
5.0	4.6	8	5.0	0	5.0	0	5.0	0
4.0	3.7	8	4.0	0	4.0	0	4.0	0
3.0	2.8	7	3.0	0	3.0	0	3.0	0
2.0	1.7	15	2.0	0	2.0	0	2.0	0
1.0	..	..	0.8	20	0.8	20	1.0	0
0.5	..	..	..	..	..	..	0.54	8

[a] 20 gamma of iron per ml.
[b] 5 gamma of iron per ml.

Table III. Ratio of Light Absorptions between Solutio of Equal Concentrations of Manganese But with Different Amounts of Iron (Fe^{+++})

Manganese, γ	Fe 20γ / 5γ	Error, %
20	1.05	5
15	1.05	5
10	1.10	10
7.5	1.10	10
5.0	1.10	10
4.0	1.15	15
3.0	1.15	15
2.0	1.15	15
1.0	1.15	15

Reagents

Formaldoxime. Dissolve by boiling in 100 ml. of distill water 20 grams of trioxymethylene and 47 grams of hydrox amine sulfate.

Sodium Cyanide. Dissolve 20 grams of sodium cyanide in 1 ml. of distilled water and filter.

Potassium Hydroxide. Dissolve 40 grams of potassium h droxide in 100 ml. of carbon dioxide–free distilled water.

Manganese Standard. Dissolve 0.4061 gram of $MnSO_4 \cdot 4H$ in 1 liter of distilled water and add 1 ml. of concentrated sulfu acid. The solution contains 0.100 mg. of Mn^{++} per ml. a standards of lower concentrations are prepared by dilution wi water.

Ferric Chloride. Dissolve 0.4876 gram of $FeCl_3 \cdot 6H_2O$ i liter of distilled water and add 5 ml. of 0.077 *N* hydrochlo acid. The solution contains 0.100 mg. of Fe^{+++} per Addition of this solution to solutions of manganese standards of unknowns must be made with a microburet.

Gum Ghatti. Dissolve by boiling in 100 ml. of distilled wa 5 grams of gum Ghatti. Filter through cotton while warm a then store in a flask with 1 ml. of toluene.

Literature Cited

(1) Denigès, George, *Compt. rend.*, 194, 895 (1932).
(2) Saywell, L. G., and Cunningham, B. B., Ind. Eng. Chem., An Ed., 9, 67 (1937).

Received May 21, 1937. Published with the approval of the director Technical Paper No. 79 of the Pineapple Experiment Station, University Hawaii.

Quantitative Determination of Arsenic in Small Amounts in Biological Materials

HERMAN J. MORRIS AND HERBERT O. CALVERY

Division of Pharmacology, Food and Drug Administration, U. S. Department of Agriculture, Washington, D. C.

THE fact that there are between four- and five-score methods in the literature for the determination of arsenic is convincing proof that they are not applicable in the hands of all individuals to the determination of arsenic in all forms and in all materials.

All these methods are divided into two parts: (1) The material containing the arsenic is either "wet" or "dry"-ashed. The "dry"-ashing procedure has as yet not proved satisfactory against loss. (2) The arsenic is determined in the ashed material by one of four general procedures—namely, the Berzelius-Marsh method (*1, 4, 9, 11*), the Gutzeit method (*6, 8*), conversion to arsenic trichloride and subsequent titration (*13*), or the colorimetric method, in which the arsenic forms a colored complex compound in acid-molybdate solution (*2, 3, 7, 10, 12, 14*). The last is the basis of the method which the authors have been using for 18 months with satisfaction. The method is simple, accurate, relatively rapid, very sensitive, and quantitatively applicable to very minute as well as relatively large amounts of arsenic. Of all the methods tried, those of Maechling and Flinn (*10*) and of Truog and Meyer (*12*) are the best but are not as satisfactory in the authors' hands as the one proposed here.

Reagents

The reagents used were: concentrated nitric and sulfuric acids, 70 per cent perchloric acid, 20-mesh zinc, a 75 per cent solution of potassium iodide, commercial hydrogen, approximately 6 *N* hydrochloric acid, acid-molybdate solution [1 gram of $(NH_4)_6Mo_7O_{24}\cdot 4H_2O$ per 100 cc. of 5 *N* sulfuric acid solution], and hydrazine sulfate (0.15 gram of $N_2H_4\cdot H_2SO_4$ per 100 cc. of aqueous solution).

Preparation of Sample

If dry, the sample is accurately weighed and transferred to a three-neck, liter, round-bottomed Pyrex flask (the necks are all ground for standard taper connections). One neck is connected by means of glass connections to a condenser for downward distillation and a flask used to catch the distillate. (The distillate, as definitely shown by Kahane and Pourtoy, *5*, and confirmed by the authors, sometimes contains arsenic, especially if the content is high and at some stage the solution has turned brown. It can be regenerated and added to the original digest.) The other two necks are fitted with funnels carrying standard taper connections for addition of acids.

A mixture of nitric and sulfuric acids is carefully added (for a 10-gram sample of animal tissue or food the authors add 20 to 30 cc. of a one-to-one mixture of concentrated nitric and sulfuric acids). The mixture is then heated to foaming and concentrated nitric acid is added from one funnel in a relatively rapid dropwise manner during the concentration period (25 to 50 cc. additional of nitric acid are usually required). After there is complete solution of the sample, perchloric acid (4 to 6 cc.) is added (perchloric acid is a dangerous explosive in the presence of large amounts of organic matter), also dropwise, relatively rapidly from the second funnel while continuing the addition of nitric acid from the other funnel. The guide for the rate of addition of nitric acid is the color of the solution, which must not be allowed to turn brown. This usually begins at the point of contact of the flame with the flask and is easily observed.

The digestion is continued with addition of nitric acid until the solution is water-clear. The addition of nitric acid is then stopped and the heating continued for 0.5 to 1 hour longer for complete destruction of all organic nitrogen compounds and complete removal of all traces of nitric acid, both of which may interfere with the subsequent determination of arsenic. This ashing procedure may be used in the determination of many metals in foods and biological materials. The time required is usually about 1.5 hours, and two or more may be run at once. The digest is quantitatively removed from the flask and made up to a convenient volume.

Separation of Arsenic from Digestion Mixture

The arsenic must be separated from interfering substances, such as phosphorus, in the digestion mixture.

APPARATUS FOR ISOLATION OF ARSENIC. A 50-cc. Erlenmeyer flask is fitted with a two-hole rubber stopper, one hole of which carries a glass tube with the lower end extending almost to the bottom of the flask. The other end leads to a stopcock attached to the bottom of a 15-cc. reservoir. The second hole of the rubber stopper carries a 10-cm. (4-inch) water-cooled upright condenser, the upper part of which is curved at a right angle to the position of the condenser. A scrubber is attached to this by means of thick-walled rubber tubing, so that there is glass-to-glass contact. The scrubber consists of a tube approximately 1 cm. in diameter and constricted at each end to approximately 6-mm. outside diameter.

The tube is filled with ignited, washed sand, which is held in place by a small amount of glass wool at each end of the large portion of the tube. Before the apparatus is put in use, the sand is moistened with a 20 per cent solution of lead acetate by adding a few drops from a pipet and then drying in an oven. The decomposition of the arsine is carried out in a quartz tube consisting of two parts. One part is 6 mm. in outside diameter and 20 to 30 cm. in length. The other part consists of a capillary approximately 10 cm. in length and 1 mm. in inside diameter. The large end of the tube is attached by means of thick-walled rubber tubing to the scrubber, so that the quartz and glass are in actual contact.

The large end of the quartz tube extends through a 10-cm. electric furnace which maintains a temperature of approximately 800° C. For cooling, a moist cloth wick about 6 mm (0.25 inch) in diameter with the end in water is used around the capillary part of the tube about 6 or 7 cm. from the furnace, to aid in condensing the arsenic. The authors use six of these units set up side by side; they may be run simultaneously or in pairs.

THE SEPARATION. Five grams of 20-mesh zinc and 1 cc. of a 75 per cent solution of potassium iodide are added to the Erlenmeyer flask. The apparatus is then assembled, the Erlenmeyer flask is immersed to its neck in a water bath kept at about 85° by means of a hot plate, and the whole system is flushed with commercial hydrogen from a cylinder. The hydrogen is conducted through the apparatus by means of the reservoir, which is temporarily fitted with a one-hole rubber stopper carrying a piece of glass tubing. After the system is completely filled with hydrogen, as determined by testing the issuing gas for explosive properties, the hydrogen flow is discontinued. (Each unit is flushed separately with hydrogen. The issuing hydrogen is tested in the usual manner by collection in a test tube and removal to a Bunsen burner where it is ignited. If it ignites and burns long enough to return to the apparatus for ignition of the hydrogen at the end of the quartz tube, there is no danger of explosion.) The furnaces heat up very rapidly, hence they should not be connected until the system is filled with hydrogen, but should be hot before the sample is added.

The sample in a volume of 10 cc. or less is then added, followed by hydrochloric acid in small quantities sufficient to maintain a slow, uniform rate of evolution of hydrogen, usually 15 cc. of 6 *N* acid over a period of 45 minutes. Tin, which is usually used, has been found of no value in this method. The acid is added to the reservoir in three 5-cc. portions, in order to ensure quantitative removal of the sample.

The arsenic distills over as arsine and is set free as metallic arsenic by the heat from the furnace and is deposited in the capillary portion of the quartz tube just outside the furnace.

The tubes are removed by disconnecting them from the scrubber and drawing them through the furnace, holding the capillary end. They are immediately cooled under a running jet of cold

water. Glass tubes cannot be used for this reason. The arsenic mirror is dissolved in 0.2 cc. of concentrated nitric acid, and quantitatively washed into a 25-cc. arsenic-free Pyrex Erlenmeyer flask with a small quantity (approximately 5 cc.) of distilled water. This solution is then evaporated to dryness on the steam bath and the flask heated for an hour in an oven at 120° to 125°, to remove all traces of oxidizing agents, since they interfere with the subsequent color development.

Development of Color

The acid-molybdate solution and hydrazine sulfate reagent are mixed in the proportions of 10 cc. of the acid molybdate and 1 cc. of the hydrazine sulfate for each 100 cc. of total solution. The 10 cc. of acid molybdate are diluted to approximately 90 cc. with distilled water before the 1 cc. of hydrazine sulfate reagent is added. The final volume is then made to 100 cc. with distilled water. After thorough mixing, 10 cc. of the above solution are added to each 25-cc. Erlenmeyer flask containing the arsenic pentoxide to be determined. How much arsenic could be determined by this amount of reagent the authors do not know, but they do know that the amount of the reagent is in excess of that required in the ranges which they have worked.

The flasks fitted with glass bulbs are heated for 10 minutes in boiling water, allowed to cool, and the colors read in a spectrophotometer. (Although the authors use a spectrophotometer and make all readings at 6100 millimicrons in a tube 10 cm. in length, of small bore, because of the straight-line absorption of the color a photometer with a filter may be used. The readings are higher with the longer wave lengths; hence the reason for reading in this range. Because the color is not very intense with small quantities, it is impossible to use a colorimeter with accuracy.) From the readings the quantity of arsenic is determined from a standard curve obtained by treating known amounts of arsenic in exactly the same manner as that described for the unknown digestion mixture above. The authors have shown that antimony does not interfere in this determination.

Discussion and Summary

During the course of the work, several different means of color development were investigated. One that gave good results was the use of ammonium molybdate, stannous chloride, and sulfuric acid as reagents (*3*). The second was the method described by Truog and Meyer (*12*), which made use of the same reagents, but in different concentrations. In the third, ammonium molybdate, hydrazine sulfate, and sulfuric acid were used, and in the development of the color was similar to the method of Maechling and Flinn (*10*).

The objections to the first method are the slightly yellow color of the blank, the instability of the stannous chloride solutions, and the variability in the intensity of color with time of heating. The objection to the second method is that the color is not stable and noticeable fading may be detected soon after the color is developed. The first method has no advantage over the other two. The second method has the advantage of developing color at room temperature and a more intense color for a given quantity of arsenic. These are outweighed by the disadvantage already mentioned. The third method offers several advantages: Hydrazine sulfate is stable in solution, the blank on the color reagents is water-clear, the intensity of the color for a given quantity of arsenic is independent of the time of heating the solution, provided the heating is long enough to develop the maximum color (10 minutes in the volumes used), and finally, the mixed reagents as described may be used.

Table I. Determination of Arsenic

Substance Analyzed	Arsenic Added	Arsenic Recovered	Percentage Recovery
	Micrograms	*Micrograms*	
Control	1[a]	0.95	95.0
	5[a]	5.00	100.0
	10[a]	10.00	100.0
	15[a]	14.50	96.6
	20[a]	19.00	95.0
Urine, 200 cc.	None	9.50	...
	50 as As_2O_3	60.50	102.0
Diet A, 10 grams	None	None	...
	500 as As_2O_3	484	96.8
Diet A, 5 grams	1140 as $Ca_3(AsO_4)_2$	1130	99.2
	1140 as $Ca_3(AsO_4)_2$	1150	100.9
Diet A, 10 grams	2280 as $Ca_3(AsO_4)_2$	2300	100.9
	2280 as $Ca_3(AsO_4)_2$	2280	100.0
Diet A, 20 grams	4560 as $Ca_3(AsO_4)_2$	4360	95.3
	4560 as $Ca_3(AsO_4)_2$	4400	96.6

[a] Six determinations were made at each level with a variation from 94 to 101 per cent recovery. This represents recovery of arsenic after distillation compared with known quantities not distilled.

Results with known quantities of arsenic are reported in Table I. The authors have made many determinations on biological materials, but the results of these findings are being withheld until the work is completed.

Acknowledgment

The authors wish to express appreciation to E. W. Wallace, formerly of this laboratory, and R. L. Grant, also of this laboratory, for extensive studies of methods of ashing. The method adopted after their investigations is almost identical with that since published by Kahane and Pourtoy (*5*).

Literature Cited

(1) Assoc. Official Agr. Chem., Official and Tentative Methods of Analysis, 1936.
(2) Deemer, R. B., and Schricker, J. A., *J. Assoc. Official Agr. Chem.*, **16**, 226 (1933).
(3) Denigès, G., *Compt. rend.*, **171**, 802 (1920).
(4) Hawking, F., *J. Pharm.*, **59**, 123 (1936).
(5) Kahane, E., and Pourtoy, M., *J. pharm. chim.*, **23**, 5 (1936).
(6) Kleinmann, H., and Pangritz, F., *Biochem. Z.*, **185**, 14 (1927).
(7) Kuttner, T., and Cohen, H. R., *J. Biol. Chem.*, **75**, 517 (1927).
(8) Lachele, C. E., Ind. Eng. Chem., Anal. Ed., **6**, 256 (1934).
(9) Lockemann, G., *Biochem. Z.*, **35**, 478 (1911).
(10) Maechling, E. H., and Flinn, F. B., *J. Lab. Clin. Med.*, **15**, 779 (1930).
(11) Monier-Williams, G. W., *Analyst*, **48**, 112 (1923).
(12) Truog, E., and Meyer, A. H., Ind. Eng. Chem., Anal. Ed., **1**, 136 (1929).
(13) Wichmann, H. J., *J. Assoc. Official Agr. Chem.*, **19**, 110 (1936).
(14) Zinzadze, C., *Ann. agron.*, [N. S.] **1**, 321 (1931).

Received June 16, 1937. Paper III of a series on investigation of the biological effect produced by continued ingestion of small quantities of lead and arsenic singly and in combination.

ANALYTICAL EDITION

INDUSTRIAL and ENGINEERING CHEMISTRY

Harrison E. Howe, Editor

Determination of Glycol or Glycerol

In Dilute Solutions Containing Oxidizable Impurities

WILLIAM E. SHAEFER

Hercules Powder Company, Experiment Station, Wilmington, Del.

GLYCEROL and glycol are so similar in their chemical behavior that, generally, a chemical method suitable or the determination of one is also applicable to the deter-ination of the other. Regardless of the type of substance eing analyzed for glycerol, the two commonly used methods or its quantitative determination are the dichromate oxida-ion method and the acetin method, wherein the acetate is ormed and saponified. Before the dichromate method can e applied to a sample, all oxidizable impurities and all chlo-ides must be removed. This is more difficult and time-onsuming than is desirable. The acetin method, according o some writers (*3, 5*), cannot be applied to a glycerol solu-ion less concentrated than 40 or 50 per cent.

The problem at hand was to analyze dilute (1 to 5 per cent) queous glycol solutions that also contained oxidizable im-urities. Since the direct and simple pyridine acetic an-ydride method (*1, 2, 4, 6*) possesses manifest advantages, the vriter wished to employ it if possible in solving this problem. Evidently such a method cannot be applied directly to the nalysis of a 5 per cent glycol solution because the water in a -cc. sample, containing 100 mg. of glycol, would require 0.8 grams of acetic anhydride. There seemed to be no hope f removing a sufficiently large proportion of the water by istillation of an aqueous glycol solution through a column, vithout a serious loss of glycol, so that the pyridine–acetic nhydride method could be applied to the residue. However, proved possible to remove the water completely by dis-illation when a suitable liquid was added to form an azeo-ropic mixture.

Experimental Work

Several preliminary experiments were made in an effort to emove practically all the water from a dilute glycol solu-ion by distillation after the addition of xylene to form a onstant-boiling mixture with water. In further experiments, yridine was employed to form a one-phase solution for the cetylation. Since results were encouraging, the work was ontinued and the procedure described below was developed.

Before working out the details, two determinations of glyc-rol and a number of determinations of glycol were made by he direct pyridine–acetic anhydride acetylation method. The specific gravity of the glycerol used in this work indicated hat it was 98.6 per cent pure. In two preliminary experi-ents, acetylation was found to proceed to the extent of 97.8 er cent in 30 minutes and to the extent of 96.6 per cent in 2 hours. The latter value, although surprising because it was lower than the former, was not confirmed because the author was interested primarily in the determination of glycol. The glycol used in these and subsequent experiments had a specific gravity of 1.1172 at 15.6°/15.6° C., which corresponds to a purity of 99.5 per cent.

The results of acetylation experiments on weighed samples of this glycol are shown in Table I.

On the basis of these results it was concluded that in the acetylation of glycol for 15 minutes under these conditions the reaction proceeds only to the extent of about 97.9 per cent of the stoichiometric value.

Pyridine hydrate, $C_5H_5N \cdot 3H_2O$, has a constant boiling point of 94.4° C. In a number of experiments a 50-cc. sample of dilute glycol solution was distilled slowly through a 3-bulb Snyder column until its volume was reduced to about

Table I. Extent of Acetylation of Glycol by Pyridine–Acetic Anhydride Reagent

Refluxing				Standing at Room Temperature for 1 Hour
1 hour	15 min.	10 min.	2 min.	
%	%	%	%	%
97.0	97.2	95.9	93.0	70.9
97.7	97.7	94.9	83.9	..
..	98.2	96.4	..	..
..	97.1	..	..	..
..	98.7	..	..	..
..	98.7	..	..	..
	Av. 97.9			

Table II. Preliminary Analyses of Synthetic Glycol Solutions

Experiment No.	Glycol Present[a] *Grams*	Glycol Found *Grams*
1	2.46	2.42, 2.45
2	2.46	2.44, 2.43
3	2.46	2.45, 2.47
4	2.46	2.44, 2.42
5	0.49	0.50
6	0.49	0.49
7	0.49	0.47
8	0.49	0.48
9	0.49	0.46
10	2.46	2.42, 2.43
11	2.46	2.45, 2.45
12	0.49	0.49
13	0.49	0.49
14	0.10	0.10
15	0.10	0.09

[a] Aliquot portions of a solution containing 5.92 grams of glycol per 100 cc. were measured with pipets.

10 cc. Then it was treated with 50 cc. of pyridine and distillation was continued until the temperature reached 99° C. It was assumed that a negligible amount of water was left in the sample after this distillation. If the residue contained more than 0.5 gram of glycol, it was diluted to 100 cc. with pyridine and an aliquot was analyzed. Some results for glycol obtained by this procedure, calculated on the assumption that the acetylation values were only 97.9 per cent of the theoretical ones, are shown in Table II.

In an effort to obtain results of higher accuracy, the distillation of the pyridine-water solution was continued in some cases until the distillation temperature reached 110°. Better results were obtained, which indicated that the more complete removal of the water was beneficial and did not result in an increased loss of glycol. Results obtained by several different analysts following the improved procedure are given in Table III.

The analyses reported in Table IV were made on portions of an aqueous glycerol solution which contained 4.88 grams of glycerol per 100 cc.

The average accuracy of the results obtained by this method was found to be about 1 per cent when applied to samples containing 0.5 gram or more of glycol. The average precision of the results shown in Table III, where added impurities had to be removed, is about 1.5 per cent; that shown in Table IV is about 1.0 per cent.

Procedure

Measure out a sample of 50 cc. or less which is thought to contain about 2.5 grams or less of glycol and remove any salt which can form a hydrate or an addition compound with glycol. Neutralize the treated sample with dilute acid or alkali, using phenolphthalein as the indicator. Transfer the sample to a pear-shaped acetylation flask and distill slowly through a 3-bulb Snyder column until the volume of liquid in the flask is reduced to about 10 cc.

Remove the thermometer and stopper at the top of the column and add 50 cc. of pyridine, dried over sodium hydroxide. Continue the distillation slowly until the temperature rises to 110° C. Rinse the Snyder column with approximately 10 cc. of pyridine.

To the acetylation flask containing the residue, or to another acetylation flask containing an aliquot of the residue after dilution to 100 cc. with pyridine, add from a Lowy automatic pipet, which need not be calibrated, 25 cc. of approximately 2.6 N pyridine–acetic anhydride reagent, always measured at the same chosen temperature. This reagent is prepared by treating 15 cc. of acetic anhydride with 1 liter of dry pyridine. Acetylat the glycol by boiling the reaction mixture gently for 15 minute Heating for 1 hour does no harm. Treat the hot reaction mixtu with 20 to 30 cc. water to convert the excess acetic anhydride t acetic acid and to rinse down the condenser, cool the flas somewhat to avoid loss of acetic acid, remove it from the co denser, and further cool it with tap water. Titrate with a proximately N sodium hydroxide solution, using phenolphthale as the indicator. Certain precautions should be taken durin this titration to avoid the danger of saponification of the glyc acetate or glycerol acetate. The solution should be shake continuously while being titrated to prevent the accumulation a local excess of alkali and care should be taken to avoid ove titrating it. Treat 25-cc. portions of acetic anhydride–pyridin reagent by the procedure just described to obtain blank value

This method is believed to be applicable to the analysis dilute solutions of glycol or glycerol in water or any solve boiling below 110° C., unless the solution contains a high boiling or nonvolatile impurity that can be acetylated.

Calculation

$$\frac{(A - B) \times \text{normality of alkali} \times 0.03103 \times 100}{\text{cc. of sample} \times \text{density} \times 0.979} = \%\ \text{glyc}$$

where A = cc. of sodium hydroxide required for blank
B = cc. of sodium hydroxide required for sample
0.03103 = gram of glycol equivalent to 1 cc. of N alka
0.979 = factor to represent the extent to which stoichi metric results are approached in the reactic

If the glycol sample contains hydrochloric acid which neutralized before the distillation is started, and if an aliqu of the residue is analyzed, the volume of the sodium chloric formed on neutralization must be calculated and the resu used in calculating the volume of pyridine solution in th volumetric flask. The volume so calculated, divided by th size of the aliquot acetylated, is then applied as a factor t the expression used in calculating per cent of glycol. If dilute glycerol solution is being analyzed, the factor for th glycerol equivalent to 1 cc. of N alkali—viz., 0.03069—shoul be used in place of 0.03103.

Summary

A method for the determination of glycol or glycerol i dilute solutions that may contain oxidizable impurities co sists essentially in the removal of the water or other lo boiling solvent after the addition of pyridine, and subsequen acetylation of the residue. The method cannot be applie in the presence of high-boiling impurities that can be acety lated. Since the acetylation reaction proceeds only to abou 98 per cent of the stoichiometric value, a constant correctio must be applied in calculating the results. When applied t synthetic mixtures, the average accuracy and precision of th method are about 1 per cent.

Acknowledgment

The writer wishes to thank two of his colleagues, V. A Aluise and W. R. Tomlinson, Jr., for their assistance in som of the analytical work.

Literature Cited

(1) Freed, M., and Wynne, A. M., Ind. Eng. Chem., Anal. Ed., 8 278 (1936).
(2) Marks, S., and Morrell, R. S., *Analyst*, 56, 428 (1931).
(3) Meyer, Hans, "Nachweis und Bestimmung organischer Ver bindungen," p. 44, Berlin, Julius Springer, 1933.
(4) Peterson, V. L., and West, E. S., *J. Biol. Chem.*, 74, 379 (1927).
(5) Sherman, "Organic Analysis," 2nd ed., p. 281, New York, Mac millan Co., 1917.
(6) Verley, A., and Bölsing, Fr., *Ber.*, 34, 3354 (1901).

Received August 2, 1937.

Table III. Analyses of Synthetic Glycol Solutions

Analyst	Experiment No.	Glycol Present	Glycol Found
		G./100 cc.	*G./100 cc.*
1	1	2.04	2.03, 2.02
2	2	2.04[a]	2.02, 2.04
2	3	2.04[a]	2.05, 2.01
1	4	1.74[b]	1.74, 1.72
2	5	1.74[b]	1.76, 1.72
2	6	1.74[b]	1.76, 1.74
3	7	2.04[a]	2.04, 2.04
3	8	2.04[a]	2.01, 2.06
2	9	1.98[c]	1.94, 2.00
4	10	1.54	1.52, 1.53

[a] Solution also contained 4% of HCl. This was neutralized before distillation was begun.
[b] Solution also contained HCl, ethylene dichloride, and chlorohydrin. The HCl was neutralized before distillation was begun.
[c] Solution also contained 4% of $CaCl_2$ and chlorohydrin. A calculated amount of sodium sulfate solution was added and precipitated calcium sulfate was removed by filtration before distillation was begun.

Table IV. Analyses of Synthetic Glycerol Solution

Experiment No.	Glycerol Present	Glycerol Found
	Grams	*Grams*
1	2.44	2.45, 2.42
2	2.44	2.44, 2.42
3	2.44	2.45, 2.42
4	1.71	1.73, 1.73
5	1.71	1.71, 1.71
6	1.22	1.24, 1.21

Determination of Uncombined Lime in Portland Cement

The Ethylene Glycol Method

D. R. MacPHERSON AND L. R. FORBRICH
Portland Cement Association, Chicago, Ill.

THE determination of uncombined lime, calcium oxide, in Portland cement has been the subject of much study during the past two decades. At present, the glycerol-alcohol method (*3*) is generally used, but, because of the long time required to conduct a single determination, attention during the last few years has been given to the development of more rapid methods. Among the newer methods is the ethylene glycol method (*2, 4*), which has been studied in this laboratory in connection with pozzolana investigations. The most important finding of these studies, described below, is that for determining uncombined calcium oxide in Portland cement a modification of the ethylene glycol method of Schläpfer and Bukowski (*4*), requiring about 40 minutes, can be substituted for the glycerol-alcohol method which requires from 1 to 7 hours for completion.

The ethylene glycol method is based on the ability of calcium oxide and calcium hydroxide to react with ethylene glycol to form a soluble calcium glycolate which is titratable with standard hydrochloric acid. The reactions involved may be considered to be as follows:

$$\underset{\text{or } Ca(OH)_2}{CaO} + \underset{\text{Ethylene glycol}}{C_2H_6O_2} \longrightarrow \underset{\text{Calcium glycolate}}{CaC_2H_4O_2} + \underset{\text{or } 2H_2O}{H_2O}$$

$$\underset{\text{Calcium glycolate}}{CaC_2H_4O_2} + 2HCl \longrightarrow \underset{\text{Ethylene glycol}}{C_2H_6O_2} + CaCl_2$$

According to the method described by Schläpfer and Bukowski, a sample of pulverized cement weighing 0.5 gram is placed in a flask with 50 ml. of ethylene glycol and a small amount of quartz sand to prevent the formation of lumps. The flask is closed by means of a rubber stopper and shaken for 30 minutes in a water thermostat at 65° to 70° C. The flask is removed from the thermostat, the solution filtered, preferably by suction, and the residue on the filter washed several times with small amounts of anhydrous denatured alcohol. The filtered solution is then titrated with 0.1 *N* hydrochloric acid, using as indicator a mixture of 0.10 gram of phenolphthalein and 0.15 gram of α-naphtholphthalein dissolved in 100 ml. of anhydrous denatured alcohol.

Schläpfer and Bukowski stated that it is essential that the ethylene glycol be chemically pure and neutral to the above indicators. However, none of the ethylene glycol obtained by the authors was neutral, and when neutralized by addition of calcium oxide it failed to remain so, reversion being slow at room temperature; but, under the conditions of the test procedure, shaking at 65° to 70° C., this reversion was essentially eliminated. That acid impurities were present, or developed during the shaking period, was shown by an experiment in which samples of calcium oxide were treated according to the method described above. The results are shown in Table I.

Since all the calcium oxide was consumed, it was evident that in every case a part of it had been neutralized during the shaking period, presumably by acidic impurities, thus giving low values for titratable calcium oxide.

Manifestly, with the reagent acting in this manner the method could not be used. However, it appeared that if this were merely a matter of neutralizing impurities, a suitable pretreatment of the ethylene glycol should eliminate the trouble.

TABLE I. EFFECT OF ACIDIC IMPURITIES

CaO Present	CaO Found		CaO Neutralized by Acidic Impurities in 50 Ml. of Ethylene Glycol
Mg.	*Mg.*	%	*Mg.*
67.0	56.3	84	10.7
54.9	45.0	82	9.9
30.6	23.4	77	7.2
19.7	13.4	68	6.3
6.5	3.8	58	2.7

TABLE II. EFFECT OF PRETREATMENT

CaO Present[a]	CaO Found	
Mg.	*Mg.*	%
19.9	19.9	100
24.9	24.8	100
29.9	29.2	98
37.1	36.4	98
41.3	40.3	98
41.4	41.4	100
50.5	49.6	98
51.3	50.6	99
53.4	52.9	99
55.7	54.7	98
63.4	61.4	97

[a] In addition to that added during preneutralization of the ethylene glycol.

Accordingly, a small quantity of calcium oxide, about 0.3 gram per liter, was shaken with the ethylene glycol for 1 hour at 65° to 70° C. This neutralized the reagent effectively without seriously impairing its ability to take up calcium oxide, since it is capable of dissolving a total of about 2.0 grams per liter under the test conditions described.

With the ethylene glycol so treated, the test method became one of measuring the increase in titratable calcium oxide, rather than measuring the total titratable calcium oxide. The results obtained under these conditions are shown in Table II.

Application to Clinkers and Dry Cements

With the method thus modified, its applicability to Portland cements was studied. In Table III are shown the uncombined calcium oxide contents of a number of cements, clinkers, and the major compounds of Portland cement, as determined by the ethylene glycol and the glycerol-alcohol methods. The average difference between the results of the two methods was less than 0.2 per cent and the maximum difference not greater than 0.4 per cent. Furthermore, the results by the ethylene glycol method were fully as reproducible as those by the glycerol-alcohol method. It appears, therefore, that the modified ethylene glycol method is satisfactory when applied to clinkers and dry cements.

The chemical data for the cements and clinkers are given in Table IV. It is of interest that for clinkers and cements containing less than about 1.5 per cent of uncombined calcium oxide, the ethylene glycol method generally gave higher values than the glycerol-alcohol method; and for samples containing more than 1.5 per cent calcium oxide, the converse was true. The results of studies by Bessey (*1*) show the same tendency. The lack of agreement might be due to faults in either or both methods.

TABLE III. COMPARISON OF THE GLYCEROL-ALCOHOL AND ETHYLENE GLYCOL METHODS

Material	Reference Number	Uncombined Calcium Oxide[a] Glycerol-alcohol method	Uncombined Calcium Oxide[a] Ethylene glycol method[b]	Deviation from Glycerol-Alcohol Method
		%	%	%
Clinker	1	0	0	0
	2	0	0.1	+0.1
	3	0	0.1	+0.1
Cement	1	0.3	0.4	+0.1
	2	0.4	0.4	0
	3	0.5	0.8	+0.3
	4	0.5	0.9	+0.4
	5	0.6	0.8	+0.2
	6	0.7	0.9	+0.2
	7	0.7	0.7	0
	8	0.8	1.0	+0.2
	9	1.0	1.0	0
	10	1.0	1.3	+0.3
	11	1.1	1.0	−0.1
	12	1.2	1.3	+0.1
	13	1.5	1.6	+0.1
	14	1.8	1.6	−0.2
	15	1.9	1.9	0
	16	2.0	1.6	−0.4
	17	2.0	1.8	−0.2
	18	2.3	1.9	−0.4
	19	2.4	2.3	−0.1
	20	2.8	2.5	−0.3
	21	3.3	3.2	−0.1
			Av. difference	0.16
Tricalcium silicate	1	0.7	0.7	0
Dicalcium silicate	2	0	0	0
Tricalcium aluminate	3	0	0.1	+0.1
Tetracalcium aluminoferrite	4	0	Trace	0
$CaSO_4 \cdot 2H_2O$	5	0	0	0

[a] Each value is the average of two determinations in good agreement.
[b] Modified as described in the text.

Application to Hydrated Cements

In the study of the ethylene glycol method applied to hydrated Portland cement, the glycerol-alcohol method was again used as the reference method because it was found by Work and Lasseter (*6*) and by the authors to be satisfactory for set cements. The results obtained for several hydrated cements and the pure compounds are shown in Table V.

The ethylene glycol method did not appear to be satisfactory when applied to hydrated cements. It gave low results for cements and tricalcium silicate cured 2.5 to 3.5 years and high results for cements cured only 3 days. Moreover, bot tricalcium aluminate and the calcium sulfoaluminate whic was formed in the mixture of tricalcium aluminate and gyp sum (5th line) appeared to be decomposed, especially the la ter. This confirms results obtained by Schläpfer and Eser wein (*5*).

The low results obtained with cements cured 2.5 to 3. years are believed to be the result of incomplete solution of th calcium hydroxide which, during the long curing perio formed crystals of such size that they were not readily solubl This has been partly confirmed by determining the solubilit of crystalline calcium hydroxide in glycerol-alcohol followin the procedure of the glycerol-alcohol method, and in ethy ene glycol. The calcium hydroxide was dissolved almo quantitatively by the glycerol-alcohol, but only 68 per ce was dissolved by the ethylene glycol.

TABLE V. RESULTS WITH HYDRATED CEMENTS

Hydrated Material[a]	Ref. No.	Uncombined $Ca(OH)_2$[b] Glycerol-alcohol method	Uncombined $Ca(OH)_2$[b] Ethylene glycol method	Deviation from Glycerol-Alcohol Method	Length of Curing Period at 70–75° F
		%	%	%	*Years*
C_3S	1	30.1	6.3	−23.8	2.5
C_2S	2	0.3	0.4	+ 0.1	2.5
C_3A	3	0	0.7	+ 0.7	2.5
C_4AF	4	0	0.3	+ 0.3	2.5
81% C_3A + 19% $CaSO_4 \cdot 2H_2O$	..	0	5.2	+ 5.2	2.5
$Ca(OH)_2$ (crystalline)	6	99.1	68.4	−30.7	..
Cement	36	23.7	12.2	−11.5	3.5
Cement	37	21.0	9.1	−11.9	3.5
					Days
Cement	38	23.7	25.1	+ 1.4	3
Cement + 3% SiO_2 aq.	38	17.8	18.9	+ 1.1	3
Cement + 10% SiO_2 aq.	38	15.2	17.3	+ 2.1	3

[a] All hydrated materials dried at 150° C. for 2 hours in carbon dioxide free air except the hydrated mixture of C_3A and $CaSO_4 \cdot 2H_2O$ which was ai dried at room temperature.
[b] Each value is the average of two determinations in good agreement.

The high results for cements cured 3 days may be accounte for by assuming that the calcium hydroxide when first forme is amorphous, or very finely crystalline, and hence readily solu ble; and then by assuming furthe that the additional calcium hydrox ide came from the decomposition o the hydrated alumina compounds This partly confirms the findings o Bessey (*1*).

TABLE IV. CHEMICAL DATA ON CLINKERS AND CEMENTS USED

Ref. No.	Chemical Analyses SiO_2	Fe_2O_3	Al_2O_3	CaO	SO_3	Loss	Potential Compound Composition[a] C_3S	C_2S	C_3A	C_4AF	MgO	$CaSO_4$	Remarks
	%	%	%	%	%	%	%	%	%	%	%	%	
							Clinkers						
1	23.76	2.07	6.08	64.28	0.07	0.17	45	34	12	6	3.05	0	Lab. prepared[b]
2	22.03	2.02	7.01	65.49	0.18	0.28	49	26	15	6	2.54	0	Commercial
3	23.50	3.92	5.30	63.39	0.09	0.13	45	34	6	12	3.10	0	Lab. prepared[b]
							Cements						
1	22.56	3.14	4.03	61.82	1.82	0.77	42	33	5	10	5.24	3.1	Commercial
2	23.26	1.53	5.19	65.67	1.54	1.37	48	31	11	5	1.22	2.6	Commercial
3	22.76	4.40	3.61	63.68	1.26	1.44	..	..	..	..	1.98	...	Special cement
4	20.71	3.59	7.00	64.95	1.87	0.71	52	20	13	11	0.98	3.2	Commercial
5	22.72	1.70	5.36	66.52	1.51	1.13	53	26	11	5	0.68	2.6	Commercial
6	20.36	2.48	7.44	62.71	1.84	1.04	39	29	16	8	3.21	3.1	Commercial
7	21.48	3.20	6.61	62.85	1.87	1.05	35	35	12	10	2.26	3.2	Commercial
8	22.92	1.85	5.05	63.64	1.72	3.00	40	30	10	6	1.15	2.9	Commercial
9	20.50	3.35	5.07	64.49	1.84	2.13	53	19	10	10	1.11	3.1	Commercial
10	23.72	2.78	5.35	44.43	1.66	1.95	..	..	..	..	19.03	...	Natural cement
11	20.84	2.13	4.75	63.06	1.67	2.25	54	19	9	7	4.58	2.8	Commercial
12	20.10	4.46	6.48	64.55	1.60	0.81	50	20	10	14	1.20	2.7	Commercial
13	20.46	3.30	6.68	64.37	1.80	1.69	46	25	12	10	1.11	3.1	Commercial
14	20.17	3.10	6.66	63.90	1.61	2.35	46	24	12	9	1.45	2.7	Commercial
15	19.94	2.90	6.06	64.09	1.89	1.70	59	19	11	9	2.70	3.2	Commercial
16	21.34	4.13	5.51	63.27	2.26	1.47	38	33	8	13	1.34	3.8	Commercial
17	21.24	3.28	6.18	64.27	1.92	1.27	39	32	11	10	1.49	3.3	Commercial
18	20.30	2.10	5.72	63.47	1.85	2.44	48	22	12	6	3.76	3.2	Commercial
19	20.22	2.58	5.24	63.84	1.72	1.15	52	13	10	8	4.12	2.9	Commercial
20	20.00	3.73	6.05	64.84	1.57	1.92	50	20	10	11	0.98	2.7	Commercial
21	18.58	2.93	7.07	66.23	1.67	1.68	54	13	14	9	1.26	2.8	Commercial

[a] Abbreviations used: tricalcium silicate, C_3S; dicalcium silicate, C_2S; tricalcium aluminate, C_3A; tetracalcium aluminoferrite, C_4AF.
[b] The laboratory-prepared clinkers were obtained from the Portland Cement Association Fellowship at the National Bureau of Standards, Washington, D. C.

General Comments

The use of technical ethylene glyco which contains not more than 0.5 pe cent of water was found satisfactory The cost of the technical grade is ap proximately one-fifth that of the chemi cally pure variety.

Since ethylene glycol has a tendenc to decompose in sunlight, it must b stored in dark-brown bottles and fre quent blank determinations should b made on the pretreated ethylene glyco to determine its alkalinity.

A tendency toward lower results wa noticed when the shaking period wa extended beyond 30 minutes; however the results, in most cases, were no greatly affected up to about 1 hour.

Because carbonation during filtratio

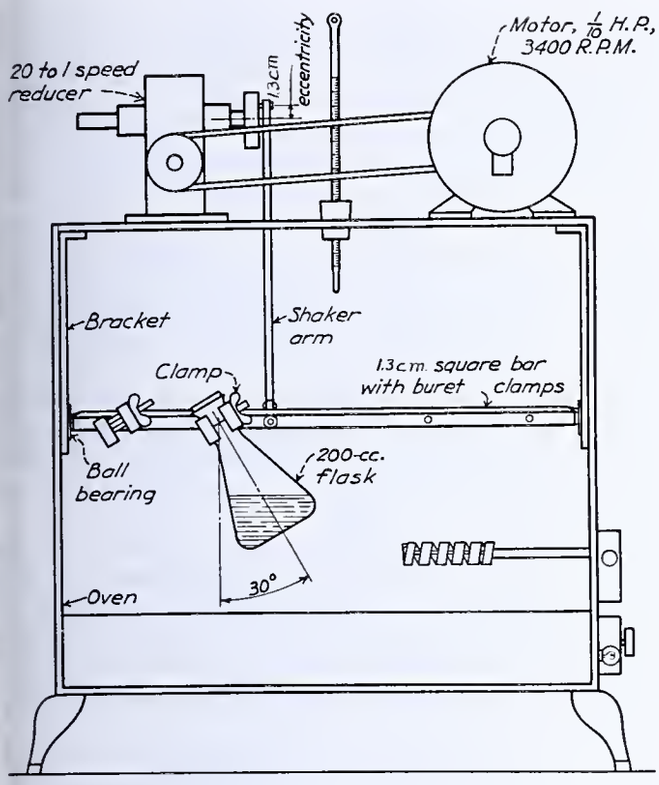

FIGURE 1. AIR THERMOSTAT WITH SHAKER

ıay cause relatively large errors, it is recommended that ıe filtering process be carried out as rapidly as possible to ıinimize this effect. The use of a Gooch crucible with a ery thin asbestos mat is satisfactory.

The size of sample of calcium oxide used for standardizing ıe acid should not greatly exceed 60 mg. when 50 ml. of hylene glycol containing about 0.3 gram of calcium oxide er liter are used. This limitation is necessary to assure uantitative conversion of the calcium oxide into calcium glyolate during the 30-minute shaking period.

The water thermostat and shaking apparatus proposed by Schläpfer and Bukowski were replaced by the apparatus shown in Figure 1.

Summary and Conclusions

The applicability of the ethylene glycol method of Schläpfer and Bukowski to the determination of uncombined calcium oxide or hydroxide in Portland cements, clinkers, and hydrated cements was studied.

When modified, the ethylene glycol method, which requires only 40 minutes for a complete determination, is satisfactory for determining uncombined calcium oxide in clinker and Portland cement, and may be substituted for the glycerol-alcohol method which requires from 1 to 7 hours for completion.

The ethylene glycol method cannot be recommended for determining uncombined calcium hydroxide in hydrated Portland cement because, in the older samples, it is not completely dissolved, presumably on account of its coarsely crystalline state, and because hydrates of the alumina compounds decompose in the presence of ethylene glycol.

Acknowledgment

Acknowledgments are due to C. L. Ford and to the Universal Atlas Cement Co. for chemical analyses of the cements and clinkers used in this investigation.

Literature Cited

(1) Bessey, G. E., *Cement*, **9**, 163–8 (1936).
(2) Bukowski, R., *Tonind.-Ztg.*, **59**, 616 (1935); *Rock Products*, **38**, 50 (1935).
(3) Lerch, W., and Bogue, R. H., IND. ENG. CHEM., Anal. Ed., **2**, 296–8 (1930).
(4) Schläpfer, P., and Bukowskii, R., *Lab. fédéral essais matériaux annexé école polytech. fédérale Zurich*, No. 63 (1933); (*Eidgenöss. materialprüfungsanstalt E. T. H. Zürich*, Rpt. No. 63).
(5) Schläpfer, P., and Esenwein, P., *Zement*, **25**, 814–16 (1936).
(6) Work, L. T., and Lasseter, F. P., *Concrete, Cement Mill Ed.*, **38**, No. 3, 81–6, No. 4, 89–92, No. 5, 79–84 (1931).

RECEIVED August 6, 1937.

Intensity and Stability of Ferric Thiocyanate Color

Developed in 2-Methoxyethanol

H. W. WINSOR, Agricultural Experiment Station, University of Florida, Gainesville, Fla.

OF THE reagents used in colorimetry, thiocyanate for iron is one of the best, but the method has never been ompletely satisfactory because of the rapid fading of the olor when developed in water solution.

Previous to 1900 several workers in Europe found that ther, amyl alcohol, and acetone when used in conjunction vith the method, inhibited dissociation of the ferric thioyanate and helped to preserve the color. The use of acetone or that purpose was introduced in this country by Marriott nd Wolf (*4*) in 1906. Miller, Forbes, and Smythe (*5*) reorted its successful use in 1929. Fowweather (*2*) employed n acetone-water mixture in which the vapor pressure was owered by using 50 per cent water in the final volume; but Vong (*10*) avoided the use of acetone because of its very rapid vaporation.

As an alternative, the extraction of ferric thiocyanate by a solvent immiscible with water is, at best, an undesirable technic; and the work of Tarugi (*6*) indicates that such extraction is not strictly quantitative.

Acetone is definitely superior to water as a medium for this determination, yet offers serious disadvantages to practical use. Its rate of evaporation is so great as to be a disturbing factor in precise analysis, and with thiocyanate it slowly forms a flocculent white precipitate which must be filtered out. Moreover, the hypothetical ideal does not obtain, because acetone, a much weaker solvent for inorganic salts, cannot be completely substituted for water. Miller, Forbes, and Smythe used the highest practicable ratio of acetone to water—about 78 per cent of acetone by weight. Yet, because of the high dielectric value of water, the 22 per cent

present in the mixture is enough to lessen in marked degree the effect of acetone in preventing dissociation of the ferric thiocyanate color developed.

Thompson and Nernst, working independently, first suggested (1893) that the ionizing power of solvents is in some way connected with their dielectric nature. Walden began his prolific investigations in this field in 1906, and after years of research confirmed his original findings with the report (*7*) that the greater the dielectric constant of a medium the greater the electrolytic dissociation of dissolved substances. Later research indicates that dissociation in some solvents is influenced by factors other than dielectric constant, but that solvents of the type here considered conform closely to Walden's original premise. Thus the dielectric constant of the solvent has been accepted for this study as a satisfactory criterion for the dissociation of the solute.

TABLE I. DIELECTRIC CONSTANTS

Material	Formula	Dielectric Constant	Solubility *G./100 ml. H_2O*
	A. Water and Monohydric Alcohols		
Water	HOH	80.0	..
Methanol	CH_3OH	33.7	∞
Ethanol	C_2H_5OH	25.7	∞
1-Propanol	C_3H_7OH	21.8	∞
1-Butanol	C_4H_9OH	17.8	7.9
1-Pentanol	$C_5H_{11}OH$	15.8	2.7
	B. Representative Ethers		
Ethoxyethane	$C_2H_5—O—C_2H_5$	4.3	7.4
1-Ethoxypentane	$C_5H_{11}—O—C_2H_5$	4.0	Slight
3-Methoxytoluene	$CH_3C_6H_4—O—CH_3$	3.6	Insoluble
α-Ethoxytoluene	$C_2H_5—O—CH_2C_6H_5$	3.8	Insoluble
Pentyloxypentane	$C_5H_{11}—O—C_5H_{11}$	3.1	Insoluble
Ethoxynaphthalene	$C_{10}H_7—O—C_2H_5$	3.2	Insoluble
1,4-Dioxane	$H_2C—O—CH_2$ / $H_2C—O—CH_2$	2.2	∞
	C. Substitutions in the Molecule		
1-Pentanol	$C_5H_{11}—OH$	15.8	Slight
1-Ethoxypentane	$C_5H_{11}—O—C_2H_5$	4.0	Slight
Pentane	$C_5H_{11}—H$	1.8	Insoluble
1,2-Ethanediol	$CH_2—OH$ / $CH_2—OH$	38.7	∞
2-Methoxyethanol	$CH_2—OH$ / $CH_2—O—CH_3$	12.0[a]	∞

[a] Preliminary value, courtesy of W. H. Byers, Department of Physics, University of Florida.

Water has the highest dielectric constant of all the common solvents. With the value of 80, it is but natural that it should allow rapid loss of color of ferric thiocyanate through dissociation. Acetone has a much lower dielectric constant than water, but when water is mixed with it, its value of 20 rises rapidly with each addition of the higher dielectric solvent. In a report on the dielectric constants of binary mixtures, Akerlof (*1*) gives 19.56 as the value for pure acetone; but shows that when water is added to the extent of 20 per cent by weight, the dielectric constant is raised to 30.33. Because of its higher amount of water, the 78 to 22 per cent reagent mixture previously discussed would have a still higher dielectric constant. It is obvious that its value of about 31.57 is so high as to permit appreciable dissociation.

It has been the purpose of this study to find, if possible, a solvent having the usual properties requisite for developing and comparing the ferric thiocyanate color, and, in addition, a dielectric constant sufficiently low to prevent loss of that color through dissociation.

Table I gives the dielectric constants (*3*) of a number of solvents, covering the range from 80 for water to 1.8 for pentane. Solubilities have been emphasized throughout, because it is necessary that the solvent be completely miscible with the sample solution and have sufficient power of solubility to prevent precipitation of inorganic salts.

Part A shows that the alcohols are not suitable for the purpose desired, as they become immiscible with water before they have reached a sufficiently low dielectric value. Part is given to show the extremely low values of the ethers. It evident from the table that in the straight-chain hydrocarbo the hydroxy group gives characteristically high values, wh the various alkoxy groups give consistently low values. T alcohols, carboxy acids, etc., whose dielectrics drop rapid in the higher homologs, are sharply contrasted by the eth which show practically no lowering of the dielectric consta with increasing molecular weight. This is evidently becau oxygen in the oxy form is such a strong influence in loweri the dielectric constant that it gives the predominating effe

The values resulting from the attachment of various ra cals are further studied in part C. To the base C_5H_{11} attached in turn hydroxy and ethoxy groups and hydrog The striking reduction of the dielectric constant from 1 to 1.8 gives further evidence of the great influence of a simp radical or single atom in controlling the dielectric constant the molecule.

Pentane with its value of 1.8 is representative of the wh series of saturated straight-chain hydrocarbons—all havi a dielectric constant of about 2.0, but all being insoluble water. Corresponding cyclic compounds such as benze and naphthalene exhibit similarly low dielectric consta (about 2.5) and are likewise unsuited for the purpose, bei immiscible with water.

From these considerations it is seen that almost eve solvent having a very low dielectric constant is insoluble water. Dioxane is one of the few exceptions. For a time was thought this solvent would be ideal, until it was fou that it would not dissolve ammonium thiocyanate. Pr panoic acid was also deficient in this respect; tertiary butan dissolved ammonium thiocyanate very slowly, did not gi a clear solution, and was not sufficiently miscible with t sample solution. Ethanoic acid also dissolved ammoniu thiocyanate very slowly, and with the iron solution gave color which was purple-red and unstable. The dielectr constants of the above solvents are 2.2, 3.1, 3.8, and 6. respectively. Every solvent of extremely low dielectr constant showed some of these faults: (1) failure to d solve ammonium thiocyanate, (2) formation of a yellow col with ammonium thiocyanate, (3) incomplete miscibility wi the sample solution (plant ash in 2.5 *N* hydrochloric acid (4) precipitation of calcium and similar salts from samp solution, and (5) incomplete development of color.

In respect to (5), the color developed was not the norm deep red of ferric thiocyanate, but was pale and contain more purple than red. It is suggested tentatively that th inhibition may have been because the dielectric constant w too low—i. e., in a medium of this low value, the tenden may be not merely to prevent dissociation but to effect condition of molecular association (*9*) in which there can b only partial development of color (*8*).

In contrast to the above, 2-methoxyethanol has prove satisfactory in every respect. It has these desirable pro erties: miscible with water in all proportions, complete colorless, boiling point = 124.3° C., density = specific gravit 0.966, dissolves ammonium thiocyanate readily, easily ob tained in pure state, dielectric constant = 12.0, and has n disagreeable odor.

The structural formula is shown at the conclusion of Tab I, with that of 1,2-ethanediol. The latter is completel miscible with water, but it has a high dielectric constan The 2-methoxyethanol, however, has retained with the on hydroxy group an excellent power of solubility; and, wit the substitution of a methoxy for the other hydroxy grou has dropped the dielectric constant from 38.7 to 12.0. Thi lower value has proved very desirable in the colorimetri procedure.

2-Methoxyethanol contains a small amount of iron as re

ived, but can be easily rendered iron-free by one distillation rough glass. Being very stable it can be stored indefinitely. is manufactured by the Carbide and Carbon Chemicals orporation and sold under the trade name "Methyl Cellolve." The price is considerably below that of the C. P. etone, heretofore used in routine analysis.

Experimental

The reagent solution is made by dissolving 10 grams of mmonium thiocyanate in sufficient 2-methoxyethanol to ake 250 ml. The solution should be stored in the dark at ice and left for 24 hours before using. That length of time necessary to allow decolorization of the initial pink color rmed by the iron present in even the best grade of thioanate. The persistence of color from such a small amount iron is excellent confirmation of the nondissociative nature the solvent; in water the dissociation is instantaneous, no nk color being visible at any time.

The reagent thus prepared has only one disadvantage: is subject to photochemical change, with the formation a yellow color. This effect can be completely prevented keeping the reagent away from light except when in use. is also advisable to keep both the solvent and the reagent lution from contact with filter paper, cork, and rubber to event contamination with iron and organic materials. the ammonium thiocyanate is sufficiently clean there will no need to filter.

In developing the ferric thiocyanate color 4 volumes of agent are used to 1 of iron solution. For routine analysis e author has followed this plan:

Pipet 2 ml. of unknown solution into a 10-ml. volumetric sk, add 2 drops of 0.1 *N* potassium permanganate, and when colorized run in the reagent to volume. Develop the standard the same way and make the color comparison in a Bausch & mb biological (semimicro) colorimeter using a 25-watt frosted lb in a Bausch & Lomb dome-shaped illuminator. Have the irror at angle of maximum reflection. Standard and unown iron solutions should contain sufficient hydrochloric acid give a normality of 2.5. The most suitable concentration for e iron standard is 0.02 mg. of iron per ml.

Under the above conditions, several tests were made to termine the relative intensities of color developed with mmonium thiocyanate in the three media under discusn: water, water–acetone mixture, and 2-methoxyethanol. sing the water solution as the standard, and reading imediately, the 2-methoxyethanol gave a comparative insity of $\frac{20.0}{10.8}$ mm. With the acetone–water mixture as the andard, the average reading was $\frac{20.0}{15.7}$ mm. Thus the insity of color developed in 2-methoxyethanol is 85.2 per nt deeper than in water and 27.4 per cent deeper than in e acetone–water mixture.

In order to test the optical clarity of the 2-methoxyethaol-ammonium thiocyanate solution, the following comparin was made: In one flask a standard solution was used hich contained 0.02 mg. of iron, and in the other flask an equal lume of standard containing 0.04 mg. of iron. Both flasks ere developed with the 2-methoxyethanol reagent under entical conditions. At different depths the readings were $\frac{0.0}{2}$, $\frac{15.0}{7.7}$, $\frac{20.0}{10.2}$, $\frac{25.0}{12.6}$, and $\frac{30.0}{15.3}$, thus indicating excellent conrmity to Beer's law.

The boiling point of 2-methoxyethanol is so high that there no loss in volume during the process of analysis. The veloped solution will stand in an open test tube for weeks ithout pronounced loss of color or of volume. The evaporon loss from solutions developed by the organic solvent agents was calculated from decrease in depth of column in open test tubes at average room temperature of 27° C. The values at the end of 24 and 47 hours both showed the evaporation in 2-methoxyethanol to be 96 per cent less than in acetone. The acetone reagent (*5*) used in all the above tests was made by dissolving 10 grams of ammonium thiocyanate in 45 ml. of water and 200 ml. of acetone.

Summary

2-Methoxyethanol is a superior medium in which to develop and compare the ferric thiocyanate color. It gives a color 85 per cent more intense than that developed in water. Compared with the most effective acetone–water mixture, it shows 27 per cent greater intensity of color and 96 per cent less evaporation.

It is colorless, almost odorless, and can be rendered iron-free by one distillation through glass. Because of its low price and slight evaporation it is very economical. With ammonium thiocyanate it makes a clear colorless reagent which conforms to Beer's law, and, having a low dielectric constant, it effectively inhibits loss of color through dissociation.

Since this new medium makes possible the development of a ferric thiocyanate color of unusual intensity and stability, it should prove especially effective for determination of the minute amounts of iron in biological materials.

Acknowledgment

The author wishes to express his appreciation to Joseph P. Bain, Department of Chemistry, University of Florida, for valuable advice concerning organic solvents, and to thank W. H. Byers of the Department of Physics for his determination of the dielectric constant of 2-methoxyethanol.

Literature Cited

(1) Akerlof, G., *J. Am. Chem. Soc.*, **54**, 4125 (1932).
(2) Fowweather, F. S., *Biochem. J.*, **20**, 93 (1926).
(3) International Critical Tables, Vol. 6, pp. 78–96 (1929).
(4) Marriott, W. McK., and Wolf, C. G. L., *J. Biol. Chem.*, **1**, 451 (1906).
(5) Miller, R. C., Forbes, E. B., and Smythe, C. V., *J. Nutrition*, **1**, 217 (1929).
(6) Tarugi, N., *Ann. chim. applicata*, **16**, 281 (1926).
(7) Walden, P., *Z. physik. Chem.*, **147, A**, 1 (1930).
(8) Weigert, F., *Ibid.*, **10, B**, 241 (1930).
(9) Williams, J. W., *Chem. Rev.*, **6**, 589 (1929).
(10) Wong, S. Y., *J. Biol. Chem.*, **55**, 421 (1923).

Received August 16, 1937.

The Absolute Turbidity of Raw Sugars

F. W. ZERBAN AND LOUIS SATTLER
New York Sugar Trade Laboratory, New York, N. Y.

IT HAS previously been stated by the writers [Ind. Eng. Chem., Anal Ed., **6**, 178 (1934); **7**, 157 (1935); **9**, 229 (1937)] that the correction factor $f_{(k)}$ of Sauer can be used to calculate the absolute turbidity of white sugars, but that it is not applicable to raw sugars high in turbidity. A reëxamination of the writers' data on raw sugars has shown that the correction factor must be based, not on the extinction coefficient ($-\log T$ for 1 cm. thickness) of the turbid solution as has been done by Landt and Witte, but on that corresponding to the coloring matter alone. If this be done, the absolute turbidity of raw sugars is found to be directly proportional to the turbidity expressed in the system used by the writers. Details will be published later.

Received September 16, 1937.

Vitamin A Content of Cod Liver Oil

A Comparison of Spectrophotometric and Chemical Methods

ARTHUR D. HOLMES, The E. L. Patch Company, Boston, Mass., FRANCIS TRIPP AND G. HOWARD SATTERFIELD, University of North Carolina, Raleigh, N. C.

SOON after the discovery of vitamin A by McCollum and Davis (*5*) and by Osborne and Mendel (*6*) in 1913, investigators reported color tests for measuring the vitamin A potency of liver oils. In 1920 Rosenheim and Drummond (*8*) found that a substance which gave reactions similar to those produced by the lipochromes, but not identical with any of the lipochromes, seemed to be responsible for the well-known color test with sulfuric acid that was extensively employed by analysts for identifying cod liver oil. This substance was reported to be a normal constituent not only of fresh cod liver oil, but of all liver fats. In 1922 Drummond and Watson (*3*) found that the substance present in liver oils which gave a purple coloration with sulfuric acid was found in the following species: man, horse, ox, pig, cat, monkey, rabbit, guinea pig, chicken, duck, pigeon, rat, mouse, frog, shark, cod, haddock, ling, coalfish, dogfish, sprat, and skate.

Three years later Rosenheim and Drummond (*7*) reported that arsenic trichloride gives a brilliant ultramarine blue color reaction with cod liver oil, which like the sulfuric acid test is characteristic for vitamin A. Furthermore this color persists for a sufficient length of time to allow a colorimetric comparison with a suitable standard.

About the same time Carr and Price (*2*) developed an antimony trichloride color test which is used in many laboratories for determining the vitamin A potency of liver fats and oils. Since the biological vitamin A assay method was adopted as the official method for determining vitamin A potency, the antimony trichloride color test has been subjected to severe criticism. Recently the spectrophotometer and the Hilger vitameter have been introduced, with a view to determining the vitamin A value of fish liver oils with a minimum of time and expense. Nevertheless many English concerns still express the vitamin A potency of their cod liver oil in terms of Blue value.

Accordingly it seemed desirable to compare the Blue value as obtained by the British Pharmacopoeia (*1*) method with the E value as determined with the Hilger vitameter. For this study a series of thirty-two medicinal cod liver oils was assembled. Since nearly one-half of these were purchased on the open market, it has been assumed that the oils are typical of commercial medicinal cod liver oil.

Methods

The method for preparing reagents and determining the Blue value as reported in the British Pharmacopoeia has seldom appeared in the American literature. Accordingly it is reproduced here.

ANTIMONY TRICHLORIDE REAGENT. A solution of antimony trichloride in pure dry chloroform saturated at 20° C.

Wash chloroform two or three times with its own volume of water, and dry it over anhydrous potassium carbonate. Pour off and distill, rejecting the first 10 cc. of distillate. Protect chloroform from light at all times. Wash antimony trichloride with pure dry chloroform until washings are clear. Prepare a saturated solution at 20° C. of the above reagents. The solution contains not less than 21 grams and not more than 23 grams of antimony trichloride per 100 cc. Keep in a well-stoppered amber bottle.

ASSAY. Mix 1 cc. of antimony trichloride solution with a solution of sodium potassium tartrate in 20 cc. of water, rotate, add 2 grams of sodium bicarbonate, and titrate with 0.1 *N* iodine. Each cubic centimeter of 0.1 *N* iodine equals 0.01141 gr of antimony trichloride.

TEST. Weigh 2 grams of oil into a 10-cc. volumetric flask, to mark with chloroform at 20° C., and mix. Take 0.2 cc. of t solution at 20° C. in a 1-cc. pipet (graduated part must be cm. long). Put it into a colorless glass cell of 10-mm. inter measurement. Place cell in colorimeter, add rapidly 2 cc. antimony trichloride, and mix. Match color at the point maximum intensity (using neutral glasses if necessary and d regard their value). The maximum color may develop in seconds. Keep antimony trichloride and oil out of contact wi rubber.

The extinction coefficient (E value) of the oils under co sideration was determined by the method employed by t American Drug Manufacturers' Association Vitamin Comm tee (*4*) in its extensive study of the reliability of the vitamet for assaying the vitamin A potency of fish liver oils and fi liver oil concentrates.

In this study cyclohexane was used as a solvent for t cod liver oils in determining the E values. The oil dilutio were adjusted to such a strength that the vitameter readin were between 0.6 and 0.8 on the vitameter logarithmic sca

Comparison of Results

The oils are arranged (Table I) according to the descendi E values obtained for them. In general, the E value a Blue value follow the same trend. Oils 1 and 2 which ga the highest E values, 1.69 and 1.65, also gave the highe Blue values, 19.1 and 18.3, respectively. The E values a the Blue values for oils 29, 30, 31, and 32 were of the san order, and were the lowest values of all the samples und

TABLE I. COMPARISON OF E VALUES AND BLUE VALUES OF C LIVER OILS

Oil No.	E Value	Blue Value			Ratio, Blue Value / E Value	Free Fatty Acids	Unsaponi-fiable
		Blue	Red	Yellow			
	$1\frac{\%}{cm.}$					%	%
1	1.69	19.1	1.0	2.0	11.30	0.97	1.00
2	1.65	18.3	0.0	1.5	11.10	0.73	1.02
3	1.62	15.5	4.0	0.0	9.57	0.38	1.16
4	1.56	16.0	0.5	1.0	10.25	0.70	1.10
5	1.54	16.5	2.5	2.0	10.71	0.80	1.12
6	1.54	14.5	4.5	0.0	9.41	0.95	1.24
7	1.52	16.5	2.0	1.0	10.85	0.87	1.07
8	1.46	14.5	2.0	1.5	9.94	0.86	1.23
9	1.46	13.0	4.0	0.0	8.90	0.17	1.22
10	1.45	13.0	2.5	1.0	8.96	0.10	1.14
11	1.43	15.0	1.5	0.0	10.49	0.34	1.12
12	1.43	11.6	9.0	0.0	8.11	0.67	1.32
13	1.38	12.7	3.0	0.0	9.20	0.13	1.20
14	1.36	12.0	2.5	0.0	8.82	0.14	1.13
15	1.34	14.0	4.5	0.0	10.45	0.86	1.24
16	1.33	15.0	0.5	0.0	11.27	0.23	1.04
17	1.29	12.1	4.0	0.0	9.38	0.11	0.90
18	1.19	11.6	3.5	0.0	9.75	0.54	1.28
19	1.18	12.1	3.0	0.0	10.25	0.56	1.24
20	1.15	11.1	4.0	0.0	9.65	0.11	1.06
21	1.14	10.6	3.0	0.5	9.30	0.21	1.17
22	1.12	12.5	2.0	1.0	11.16	0.32	0.99
23	1.07	11.3	3.0	1.0	10.56	0.18	1.17
24	0.99	10.6	1.5	0.0	10.70	0.32	1.32
25	0.99	11.1	3.0	1.0	11.21	0.19	1.15
26	0.97	9.1	2.5	0.0	9.38	0.09	0.92
27	0.96	9.1	2.0	0.0	9.48	0.73	1.11
28	0.83	9.1	2.5	0.5	10.96	0.40	0.80
29	0.79	9.1	2.0	1.0	11.52	0.41	1.15
30	0.78	8.1	0.5	0.0	10.38	0.45	1.04
31	0.58	7.6	1.0	0.0	13.10	0.24	1.11
32	0.50	3.3	1.0	0.5	6.60	1.20	0.98
Av.	1.23	12.4	2.7	1.1	10.08	0.47	1.12

onsideration. The E values for the thirty-two samples ranged rom 0.50 to 1.69, while the Blue value range was from 3.3 o 19.1.

There was no consistent relationship between the E value nd the Blue value for the remaining twenty-six samples.)il 16, with an E value of 1.33, gave a Blue value of 15.0, hile oils 6, 8, 9, 10, and 12 gave Blue values under 15.0 alhough their E values were much higher than that for oil 16.)il 12, with an E value of 1.43, had a Blue value of 11.6, while il 22, whose E value was only 1.12, gave a Blue value of 12.5.

A thorough examination of Table I will also show similar iscrepancies for several other samples. The Blue values or the last half of the group of oils under consideration—amely, oils 17 to 32, inclusive—did not exceed 12.5 and the E value did not exceed 1.29; hence there was a tendency for ils with a low E value to give low Blue values also.

The majority of the oils gave a Blue value:E value ratio etween 9.0:1 and 11.0:1, although the ratio varied from .60:1 for oil 32 to 13.10:1 for oil 31. The average for the en samples whose Blue value:E value ratio was between 0.25:1 and 10.96:1 was 10.56:1, while ten other samples hose ratio was between 9.20:1 and 9.94:1, gave an average lue value:E value ratio of 9.51:1. The average ratio for ie thirty-two samples was 10.08:1.

It is difficult to explain the inconsistent trend of E values nd Blue values for the first sixteen samples. In order to ccumulate data which might explain the discrepancies, the ee fatty acid and the unsaponifiable content were determined y the official United States Pharmacopoeia methods (*9*), nd these results are also reported in Table I.

In general the oils with the highest E values also had the ighest free fatty acid values. With the exception of oil 3, ie fatty acid content for oils 1 to 8, inclusive, exceeded 0.7 er cent. These seven samples also gave the highest E values. owever, oil 3, with a fatty acid content of only 0.38 per cent, ive a high E value of 1.62. Oil 32, whose fatty acid content, .20 per cent, was higher than that for any other oil in the eries, gave the lowest E value, 0.50, of all the samples under nsideration. Twelve of the cod liver oils had a fatty acid ntent of less than 0.25 per cent and their E values varied om 0.58 to 1.46.

Observations were made to determine whether or not the tty acid content of the cod liver oils had any tendency to ause a red tinge to the characteristic blue color resulting om the antimony trichloride reaction. As will be noted in able I, it was necessary to place in the tintometer along with ie blue glasses a red Lovibond glass having 4.0 Lovibond red nits in order to match the color produced by oil 3 and the timony trichloride solution. The fatty acid content of is oil was but 0.38 per cent. Oil 1, whose acid content, 97 per cent, was approximately three times as large, reired only 1.0 Lovibond red unit in the color match. On ie other hand, oil 12, whose acid content, 0.67 per cent, was idway between that of oils 1 and 12, required 9.0 Lovibond d units to obtain a color match. Cod liver oils 17 and 20, hose fatty acid content, 0.11 per cent, was extremely low, ich required 4.0 Lovibond red units in the Blue value color atch. Hence a further survey of the results reported in able I shows that there is no relationship between the nount of free fatty acid in the oil and the amount of red lor produced by the reaction of the oil and the antimony ichloride solution in the Blue value determination.

Attention was also given to the amount of yellow color hich was produced during the antimony trichloride test of ie oils under consideration. Cod liver oils 1, 2, and 5, whose ee fatty acid content was 0.97, 0.73, and 0.80 per cent, ecessitated the use of yellow glasses having 2.0, 1.5, and 2.0 ovibond yellow units, respectively, in order to obtain a tisfactory Blue value determination. On the other hand, cod liver oils 6, 27, and 12 had practically the same fatty acid content as cod liver oils 1, 2, and 5, yet no Lovibond yellow glasses were required to obtain a satisfactory Blue value color match. It appears that there is no correlation between free fatty acid content and the amount of yellow color produced by the action of the antimony trichloride solution on the oil in the process of the Blue value determination.

The amount of unsaponifiable material present in the thirty-two samples of cod liver oils varied from 0.80 per cent for oil 28 to 1.32 per cent for oils 12 and 24. There is obviously no relationship between the amount of unsaponifiable material contained in the oils and their vitamin A potency as determined by the antimony trichloride or vitameter methods. Cod liver oils 1 and 2, which gave the highest E values of the entire group, contained only 1.00 and 1.02 per cent of unsaponifiable material, respectively, while oils 29, 30, 31, whose E values were among the lowest of the entire group, contained more unsaponifiable material than oils 1 and 2. Cod liver oils 12 and 24, whose E values were 1.43 and 0.99, respectively, contained 1.32 per cent of unsaponifiable material. Hence it is evident that there is no consistent relationship between the amount of unsaponifiable material present in the oils and their vitamin A potency.

Summary

The vitamin A potency of thirty-two samples of cod liver oils was determined by the Hilger vitameter E value and the antimony trichloride Blue value methods.

A comparison of the results obtained by the two methods indicated that in general they were of the same order. The oils that gave high E values also gave high Blue values, while those with the lowest E values also gave the lowest Blue values.

The Blue value: E value ratio was between 9.0:1 and 11.0:1 for the majority of the samples under consideration.

The fatty acid content of an oil has no direct relationship to the amount of red color or yellow color produced by the action of the antimony trichloride solution on the oil.

The results obtained for free fatty acid and unsaponifiable material showed that the amount of free fatty acid and unsaponifiable material present in an oil is not correlated with its E value or Blue value; there is no consistent relationship between the vitamin A potency and the free fatty acid or unsaponifiable material present in cod liver oils.

Literature Cited

(1) British Pharmacopoeia, London, England, Constable and Co., 1932.
(2) Carr, F. H., and Price, E. A., *Biochem. J.*, **20**, 497 (1926).
(3) Drummond, J. C., and Watson, A. F., *Analyst*, **47**, 341 (1922).
(4) Holmes, A. D., Black, A., Eckler, C. R., Emmett, A. D., Heyl, F. W., Neilsen, C., and Quinn, E. J., *J. Am. Pharm. Assoc.*, **26**, 525 (1937).
(5) McCollum, E. V., and Davis, M., *J. Biol. Chem.*, **15**, 167 (1913).
(6) Osborne, T. B., and Mendel, L. B., *Ibid.*, **16**, 423 (1913); **17**, 401 (1914); **20**, 379 (1915).
(7) Rosenheim, O., and Drummond, J. C., *Biochem. J.*, **19**, 753 (1925).
(8) Rosenheim, O., and Drummond, J. C., *Lancet*, **1**, 862 (1920).
(9) U. S. Pharmacopoeia, XI ed., Easton, Pa., Mack Printing Co., 1936.

Received August 11, 1937. Submitted by Francis Tripp in partial fulfillment of the requirements for the degree of master of science, University of North Carolina.

Estimation of Total Reducible Sulfur in Caustic Soda

GUSTAVE HEINEMANN AND HENRY W. RAHN, Southern Alkali Corporation, Corpus Christi, Texas

A method has been developed for the estimation of small quantities of reduced and reducible sulfur compounds (other than sulfate) found in caustic soda. The method involves an alkaline and an acid reduction of the sulfur compounds to the sulfide form with subsequent evolution of hydrogen sulfide and its titration iodometrically.

The procedure is applicable to both lime-soda and electrolytic caustic. An accuracy of ±3 per cent is indicated in the range 0.0001 to 0.01 per cent sulfur.

COMMERCIAL caustic soda ordinarily contains small quantities of reduced and reducible sulfur compounds—namely, sodium sulfide and sodium thiosulfate—in addition to a relatively high concentration of sodium sulfate, which is usually classed as a reducible compound. By the method outlined in this report, however, the sulfate is irreducible, and being so does not enter into the discussion. On the other hand, the polythionates which are normally reducible by the method do not exist in concentrated caustic soda. This is illustrated by the following reaction:

$$2Na_2S_5O_6 + 6NaOH \longrightarrow 5Na_2S_2O_3 + 3H_2O$$

which occurs during the process of evaporation, causing the gradual conversion of the polythionates to the thiosulfate (*1*).

The determination of the total quantity of sulfur (total reducible sulfur) contained in these reduced and reducible sulfur compounds in concentrated sodium hydroxide is not readily accomplished by any one of the usual analytical methods for small quantities of reducible sulfur. The colorimetric method of Yoe (*8*) involving the formation of methylene blue by hydrogen sulfide serves to determine only the sulfide sulfur, and unless the thiosulfate sulfur is reduced to the sulfide, it becomes indeterminable by the method. An added objection to this method, in connection with industrial applications, is the time interval of several days required for the development of maximum color. Similarly, the stain methods of Snell (*6*) determine only the sulfide sulfur unless the thiosulfate form is reduced by some auxiliary treatment. Like most stain methods, they lose accuracy as the sulfur content increases and, in addition, considerable time is involved in the preparation of a fresh set of standards daily. Johnson's (*3*) method for the determination of sulfur in iron and steel has the advantage of being applicable to higher sulfur concentrations than can conveniently be handled by the stain or colorimetric methods. This is true because of the fact that the sulfur is titrated iodometrically. However, in common with the previously mentioned methods, this method does not offer conditions for the complete reduction of the thiosulfate.

The direct iodometric titration of reducible sulfur compounds in caustic soda is not possible because hypoiodite and iodide are formed by the reaction between the caustic soda and the iodine. This reaction would lead to an erroneously hi result.

$$2NaOH + I_2 = NaOI + NaI + H_2O$$

In the colorimetric stain method of Scherer and Sweet (for the determination of reducible sulfur compounds in pap specific provision is made for the reduction of these co pounds with nascent hydrogen. However, this method reduction proved inadequate when applied to acidified caus soda solutions containing known quantities of sodium thi sulfate. To reduce the thiosulfate, completely, it was nece sary to develop the more vigorous reduction procedure here described.

If, then, the thiosulfate sulfur is reduced to sulfide and d termined as such in an acid solution together with the sulf originally present as sulfide, the iodine equivalent obtained b titration will be a true measure of the total reducible sulf in the sample. As yet no method has been developed for t determination of the relative quantities of sulfide and thi sulfate in the low concentrations normally found in caus soda.

Principles of Modified Method

The method of the writers is dependent upon the comple reduction of thiosulfate sulfur to sulfide sulfur, which is a complished in two stages: (1) the partial reduction of t thiosulfate in an alkaline medium with stannous chlorid and (2) completion of the reduction with aluminum met in an acid solution. The reactions occurring in each sta can be represented by equations of the general type:

Reduction in the Alkaline Medium:

$$Na_2SnO_2 + Na_2S_2O_3 + 2NaOH \longrightarrow Na_2SO_3 + Na_2S + Na_2SnO_3 + H_2$$

Reduction in the Acid Medium:

$$Na_2SO_3 + 2HCl \longrightarrow 2NaCl + SO_2 + H_2O$$
$$SO_2 + 3H_2 \text{ (nascent)} \longrightarrow H_2S + 2H_2O$$

Additional Reactions in the Acid Medium:

$$2Al + 6HCl \longrightarrow 2AlCl_3 + 3H_2$$
$$Na_2S + 2HCl \longrightarrow H_2S + 2NaCl$$

By this procedure, any sulfide sulfur originally present i the sample becomes included with the reduced thiosulfa sulfur, and as such is indistinguishable from the latter.

In developing the reduction procedure, use was made the fact that a difference exists between the stoichiometr iodine demands of thiosulfate and sulfide sulfur. These r lations are as follows:

$$Na_2S + I_2 \longrightarrow 2NaI + S \qquad (1)$$
$$1S \equiv 2I$$

$$2Na_2S_2O_3 + I_2 \longrightarrow Na_2S_4O_6 + 2NaI \qquad (2)$$
$$1S \equiv \frac{I}{2}$$

The preceding equations indicate that if X grams of thio sulfate sulfur are equivalent to a ml. of a standard iodin solution, then X grams of thiosulfate sulfur completely re duced to sulfide sulfur are equivalent to $4a$ ml. of the sam iodine solution. This relation was utilized to determine th completeness of reduction by various methods.

Outline of the Modified Method

Reduction of the thiosulfate is carried out in two stages: 1) stannous chloride is added to the diluted solution of the ample and boiled for 1 minute; (2) aluminum metal is laced in the cooled solution, which is then acidified with ydrochloric acid to yield nascent hydrogen. The evolved ases—mainly hydrogen sulfide, hydrogen, hydrochloric acid, nd carbon dioxide—are passed into an ammoniacal cadmium hloride solution wherein the sulfur is precipitated as cadıium sulfide. When the reaction has gone to completion ıe cadmium sulfide is titrated with a potassium iodate–ɔdide solution in an acid medium.

Apparatus

The reaction vessel consists of a 1000-ml. Erlenmeyer flask tted with a two-hole sulfur-free rubber stopper into which have een inserted a 150-ml. dropping funnel (with turned-up outlet) xtending to the bottom of the flask, and a Pyrex distilling head ıch as is used for Kjeldahl distillations (Figure 1).

The distilling head outlet is connected to a sintered-glass ubbling unit by means of a short piece of rubber tubing, which as been previously boiled in a strong sodium hydroxide solution 30 per cent) to remove surface sulfur.

Reagents

Ordinary distilled water is usually sufficiently free of reducible ılfur compounds not materially to affect the accuracy of this etermination. A convenient source of distilled water at 15° C. indispensable for carrying out titrations.

C. P. Analyzed Concentrated Hydrochloric Acid.

Aluminum Reduction Strips: 1.6-mm. (0.062-inch) pure ıeet aluminum cut into 1.25 × 10 cm. (0.5 × 4 inch) strips. ıst prior to use, the strips are boiled in a dilute hydrochloric ɔid solution (1 to 5) for 30 seconds and then rinsed with disıled water.

Ammoniacal Cadmium Chloride Solution: A 2 per cent solon of C. P. cadmium chloride to which sufficient ammonium ydroxide is added to dissolve the first precipitate of cadmium ydroxide.

Sodium Hydroxide: 50 per cent sodium hydroxide as made om C. P. sodium hydroxide and which, by a blank determination ı all the reagents, has also been shown to be substantially sulfuree.

Standard Thiosulfate Solution, 0.00624 *N*: Made by dissolvıg C. P. $Na_2S_2O_3 \cdot 5H_2O$ in distilled water and standardizing gainst a standard iodine solution. The thiosulfate solution is abilized by adding 5 grams of sodium hydroxide and 0.1 gram hydroquinone per liter, and is then protected from the sunght by covering the bottle with black paper or paint. One illiliter contains 0.0004 gram of reducible sulfur.

Standard Potassium Iodate–Potassium Iodide Solution, 00624 *N* with respect to the liberated iodine on acidification: ml. KIO_3 – KI = 0.0001 gram of sulfide S ≡ 0.0004 gram of ıiosulfate S.

Starch Solution: 5 grams of soluble starch and 50 ml. of ɔncentrated acetic acid per liter.

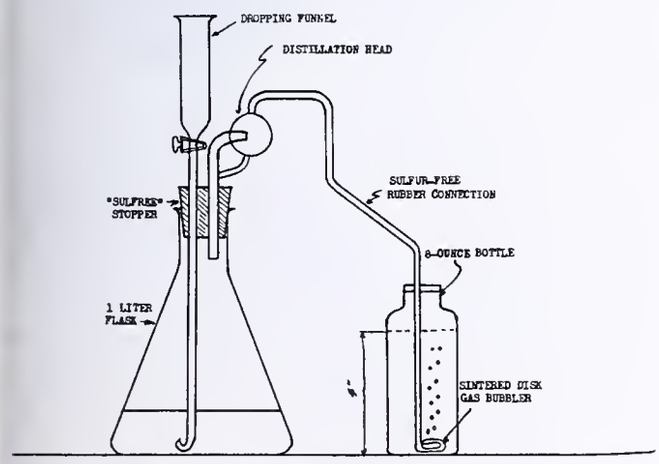

FIGURE 1. ASSEMBLY OF APPARATUS

TABLE I. REDUCTION WITH ALUMINUM (ACID SOLUTION)

0.00624 *N* Thiosulfate	Theoretical Iodine Titer Following Complete Reduction to Sulfide (0.00624 *N*)	Actual Iodine Titer
Ml.	*Ml.*	*Ml.*
4.0	16.0	10.1
4.0	16.0	12.8
4.0	16.0	11.4
3.0	12.0	6.0

Stannous Chloride: 10 per cent C. P. stannous chloride solution containing a stick of C. P. tin.

Operation

A sample containing approximately 50 grams of caustic soda is weighed into a 1000-ml. Erlenmeyer flask, and dissolved in 200 ml. of distilled water. Twenty milliliters of 10 per cent stannous chloride solution are added and the solution is brought to a boil. An absorption unit containing 200 ml. of 2 per cent ammoniacal cadmium chloride solution is prepared; to the cooled caustic stannous chloride solution two aluminum reductor strips are added, the apparatus is immediately assembled as shown in Figure 1, and the caustic is acidified with 200 ml. of concentrated hydrochloric acid.

The cadmium chloride solution, together with any cadmium sulfide adhering to the receiver, is transferred to an 800-ml. beaker. The sintered-glass disk is also placed in the beaker because a considerable quantity of cadmium sulfide usually adheres to the outlet surface. Sufficient cold distilled water (15° to 20° C.) is then added to make the total volume in the beaker about 650 ml.

The titration is carried out by adding an excess of potassium iodate–iodide solution, stirring thoroughly and then acidifying with concentrated hydrochloric acid (5 cc. excess per 100 ml.). A few milliliters of 6 *N* hydrochloric acid are also forced through the bubbling unit to dissolve the adhering cadmium sulfide. Care should be exercised in keeping the outlet well below the surface until this cadmium sulfide has all dissolved. The temperature at this stage should not be more than 20° to 25° C. because of the possible volatilization of the iodine.

Three to five minutes are allowed for the completion of the reaction and then the excess iodine is back-titrated with standard sodium thiosulfate.

The potassium iodate–iodide consumption is a measure of the cadmium sulfide present. The entire reaction and the subsequent titration should be carried out in the absence of direct sunlight (*2*).

For the titration of samples containing from 0.001 to 0.005 gram of total reducible sulfur, it was convenient to use 0.03 *N* potassium iodate–iodide and sodium thiosulfate solutions. The titration of more than 0.005 gram of total reducible sulfur is not accurate by this method, because of the absorption of iodine on the free sulfur liberated during the reaction (*7*).

Experimental Notes

When appreciable amounts of chlorates are present in the sample (as in electrolytic caustic), they can be eliminated by using larger quantities of stannous chloride for the preliminary reduction and allowing the treated solution to stand at room temperature for 5 minutes prior to boiling. Five grams of stannous chloride are normally sufficient for this purpose.

The reduction of sodium thiosulfate by aluminum in caustic soda solution does not, like the stannous chloride reduction, yield all the sulfur as the sulfide. According to Mellor (*4*), the reaction appears to be as follows:

$$Na_2S_2O_3 + 4NaOH + Al \longrightarrow Na_2SO_3 + Na_2S + Na_2AlO_2 + 2H_2O$$

On acidification the sulfite sulfur (sulfur dioxide) can be reduced to hydrogen sulfide with nascent hydrogen and all the sulfur obtained as the sulfide. However, this procedure is not recommended, for much difficulty is invariably encountered in dissolving the large quantity of aluminum hydroxide which precipitates as the solution approaches neutrality.

In Table I are listed typical results obtained on reducing known quantities of sodium thiosulfate in 20 per cent sodium hydroxide solutions by the method of nascent hydrogen reduction (Scherer and Sweet, *5*). In these experiments the alkaline solutions were immediately acidified following the introduction of two aluminum reductor strips. The remainder of the procedure was as recommended. The results indicate incomplete reduction of sulfur to the sulfide. A probable explanation lies in the reaction between sodium thiosulfate and hydrochloric acid.

$$Na_2S_2O_3 + 2HCl \longrightarrow S + H_2SO_3 + 2NaCl$$

The elevated temperature at which the neutralization is completed no doubt accelerates the above reaction, involving a loss of sulfur.

Table II. Reduction with $SnCl_2$ Only (Alkaline Solution)

0.00624 *N* Thiosulfate	Theoretical Iodine Titer Following Complete Reduction to Sulfide (0.00624 *N*)	Actual Iodine Titer
Ml.	*Ml.*	*Ml.*
4.0	16.0	11.6
3.0	12.0	8.3
4.0	16.0	13.8
3.0	12.0	6.7

In Table II are listed typical results obtained from determinations in which the reduction procedure consisted only of adding 20 ml. of a 10 per cent stannous chloride solution to the diluted caustic sample, which was then boiled and cooled previous to acidification with hydrochloric acid. From these results, it is evident that stannous chloride alone does not give the desired results.

Table III presents normal results obtained when the reduction procedure consisted of pretreating the caustic sample with stannous chloride, followed by acidification in the presence of aluminum reductor strips. These results definitely indicate that the combined use of stannous chloride and nascent hydrogen completely reduces sodium thiosulfate. The hydrogen evolved from the aluminum has a triple function: (1) in maintaining a reducing atmosphere, (2) in reducing sulfur dioxide to hydrogen sulfide, and (3) in transferring t liberated hydrogen sulfide from the reaction flask to the a sorption liquid.

Table III. Reduction with Stannous Chloride and Ac fication

(20 ml. of 10 per cent $SnCl_2$, boiled 1 minute; 2 aluminum reductor stri

0.00624 *N* Thiosulfate	Theoretical Iodine Titer Following Complete Reduction to Sulfide (0.00624 *N*)	Actual Iodine Titer
Ml.	*Ml.*	*Ml.*
4.0	16.0	16.1
4.0	16.0	15.9
4.0	16.0	15.8
3.0	12.0	11.8

Range of Application and Accuracy

A total reducible sulfur content of 0.0001 and 0.01 per ce in caustic soda can be estimated by following the outlin procedure. The accuracy is about ±3 per cent as indicat from results obtained by the reduction of known quantit of sodium thiosulfate in c. p. caustic soda.

Literature Cited

(1) Ephraim, F., "Inorganic Chemistry," p. 497, New York, D. V Nostrand Co., 1934.
(2) Hillebrand and Lundell, "Applied Inorganic Analysis," p. 5 New York, John Wiley & Sons, 1929.
(3) Johnson, C. M., "Chemical Analysis of Special Steels," pp. 33 5, New York, John Wiley & Sons, 1930.
(4) Mellor, J. W., "A Comprehensive Treatise on Inorganic a Theoretical Chemistry," Vol. 10, p. 503, New York, Longma Green & Co., 1930.
(5) Scherer and Sweet, Ind. Eng. Chem., Anal. Ed., 4, 103–4 (193
(6) Snell, F. D., and Snell, C. T., "Colorimetric Methods of A alysis," Vol. I, pp. 593–8, New York, D. Van Nostrand C 1936.
(7) Treadwell, F. P., and Hall, W. T., "Analytical Chemistry Vol. II, p. 583, New York, John Wiley & Sons, 1930.
(8) Yoe, J. H., "Photometric Chemical Analysis," Vol. I, Colorin try, pp. 375–6, New York, John Wiley & Sons, 1928.

Received July 14, 1937.

Analysis of Platinum Metals–Silver Assay Bead

F. E. BEAMISH and M. SCOTT, University of Toronto, Toronto, Ontario, Canada

A procedure has been developed for the analysis of the platinum metals–silver-gold assay bead, and the losses of these precious metals at each stage of the analysis are reported.

The analytical difficulties associated with the presence of iridosmine in the bead are discussed and a method which will completely dissolve the final bead residue is included.

THIS report deals with a procedure for the separation and determination of the platinum group of metals and gold after collection from the ore by pot assay and subsequent cupellation of the lead regulus to a silver–platinum metals bead. The analyst has been reminded from time to time that for various reasons the analysis of an assay bead is difficult. The authors contend that few procedures have been published for the analysis of the assay bead which contain sufficient information to permit the inexperienced assayer to complete the analysis in an intelligent manner. The bead and residues are treated with acids, etc., and generally there are very few, if any, data recorded which will assure the operator that the acids have removed only, and all, the desir elements. In addition, apparently there has been no repo of the analytical difficulties associated with the simultaneo presence in the bead of the native alloy, iridosmine (osm ridium), and the platinum metals.

There are indications that various types of native irido mine react differently toward fused sodium peroxide a other fusion reagents. Tasmanian iridosmine, for instanc is most difficult to decompose by means of fusion mixtur even after severe fire treatment with lead, while certain oth iridosmines seem to decompose much more readily under t same conditions. In view of these facts and because seve

treatment is necessary to dissolve all the iridium in the final residue, it seems reasonable to assume that any fusion mixture which dissolves all this metal may also attack the iridosmine which is very often present in platinum-bearing material. Also, unless the operator succeeds in dissolving all the cupeled iridium, the undissolved metal will be included in the so-called "insoluble residue" generally reported as "osmiridium." The authors feel that this insoluble residue ought to be so called and the term "osmiridium" eliminated from published reports on the composition of platinum metals–silver beads.

Preliminary Treatment of the Bead

It has been customary to flatten the bead into a cornet before parting, apparently to ensure thorough contact with the parting acid. Unless great care is taken, this procedure must produce considerable losses—for instance, in the case of beads containing a high proportion of iridium or rhodium, where the metal often appears on the surface of the bead in clumps of dark material which is easily rubbed off during the flattening process. It has been the authors' experience that beads part sufficiently rapidly and clean enough for wet analysis without flattening. Various methods may be used to clean the beads, which are sometimes dipped in caustic solutions or in acetic acid. The authors do not clean the beads before wet analysis.

The Parting Acid

Beamish and Russell (*1*) have pointed out that boiling sulfuric acid will dissolve appreciable proportions of platinum and produce serious losses of rhodium. The authors find that iridium may very often be found in the sulfuric acid parting solution. It is possible that this metal passes into the filtrate as very finely divided particles. The experiments made for this report indicate that iridium is more consistently found in the parting solution if filtration of the insoluble residue is made with Whatman's No. 40 instead of No. 42 filter paper, although on occasion as much as 0.1 mg. of iridium has passed through the finer No. 42 grade. With the "modified parting method" the dissolving of platinum and rhodium is reduced to inappreciable proportions and the iridium is also more generally absent from the parting acid, probably because the bead residue is more coherent.

Boiling sulfuric acid, of course, dissolves most of the palladium if sufficient silver is present. By the "modified parting method" appreciable proportions of palladium are dissolved and the fact that the parting acid is water-white is no evidence that this metal is absent. A definite precipitate with dimethylglyoxime can often be obtained in such cases. With the "modified parting method" considerable amounts of silver remain with the residue, but this does not seriously interfere in the subsequent procedures.

The Parting Acid Residue

A considerable amount of lead sulfate will usually be found with the parting acid residue, and can be washed out with about 3 alternate washings of 50 per cent ammonium acetate and hot water.

In order to determine whether this extract contained any of the platinum metals, the solution was taken to dryness over steam, the ammonium acetate was removed by 5 or 6 evaporations with hydrochloric acid, 1 to 3 aqua regia was added, and then the nitric acid was removed. The final dry residue was treated with about 0.1 cc. of hydrochloric acid and about 10 cc. of water, the mixture was filtered, and the filtrate was evaporated to about 2 cc.

A negative test with dimethylaminobenzilidine rhodanine showed the absence of palladium. Stannous chloride reagent confirmed this and proved the absence of platinum. Benzilidine showed the absence of gold. Addition of stannous chloride to about 0.2 cc. of the test solution and boiling proved the absence of rhodium. About 0.5 cc. was treated with sulfuric acid and fumed to about 0.4 cc., then fuming nitric acid was added, and the solution was boiled to about 0.2 cc. The absence of a blue or green color indicated that iridium was not present.

The authors have found no combination of platinum metals in which cupeled rhodium and iridium were appreciably attacked by strong aqua regia (3 to 1). Parting acid residues containing about 8 mg. of iridium and 8 mg. of rhodium have been kept in contact with 3 to 1 aqua regia for 3 to 10 hours, and in every case these metals were found to be absent from the acid solutions. This is in striking contrast to directions included in certain published procedures stating that the cupeled iridium can be dissolved quantitatively by means of strong aqua regia. It was necessary to determine whether the strong aqua regia dissolved all the platinum, palladium, and gold out of the final residue. Many of these final residues were examined and it was found that, even after a single 3-hour treatment with aqua regia, traces of palladium and particularly of platinum remained with the rhodium and iridium. In no case was gold found to be present.

Determination of Gold

A considerable number of analyses on native platinums derived from Dunite sources were made. A characteristic of this type of material is the low palladium content, which is very often less than 0.5 per cent. When much gold is present the reaction product of hydroquinone interferes with the subsequent precipitation of traces of palladium.

Hydrochloric acid solutions were prepared containing varying relative proportions of gold and palladium. The gold was precipitated with hydroquinone and dimethylglyoxime added directly to the filtrate. This liquid was filtered and the filtrate evaporated to dryness, then a few cubic centimeters of sulfuric acid were added and the organic matter was destroyed in the usual manner. The sulfuric acid was fumed off until the residue was just moist, then 20 to 30 cc. of water were added to dissolve the residue. This solution was filtered, and the palladium was precipitated with dimethylglyoxime. The results obtained are given in Table I.

Table I. Determination of Palladium in the Hydroquinone Solution from the Gold Precipitation

No.	Palladium Added	Gold Added	Palladium Recovered from Second Precipitation
	Mg.	*Mg.*	*Mg.*
1	0.2	25	0.2
2	0.4	25	0.3
3	0.6	25	0.6
4	0.8	25	0.6
5	1.0	25	0.3
6	1.5	25	0.1
7	3.0	25	0.05
8	10.0	25	0
9	35.0	25	0
10	75.0	25	0
11	150.0	25	0

In the case of Nos. 8, 9, 10, and 11 the addition of dimethylglyoxime to the first gold filtrate produced an immediate precipitate. With Nos. 5 and 6, precipitation was induced after considerable stirring, and with Nos. 1, 2, 3, and 4 the addition of dimethylglyoxime to the first gold filtrate produced no precipitate.

When solutions containing 0.2 mg. of palladium and about 15 mg. of gold were treated with sulfur dioxide water to remove the gold it was found that, even after vigorous boiling of the filtrate, the palladium could not be completely removed with dimethylglyoxime. It is common practice to treat

the filtrate from gold–sulfur dioxide precipitations with a few drops of nitric acid after having boiled the solution vigorously, to aid in the removal of sulfites. The authors' results indicate that the nitric acid does not make the precipitation of palladium dimethylglyoxime more complete.

When traces of palladium are present in solution with considerable amounts of gold, there is less interference with palladium dimethylglyoxime precipitation from sulfur dioxide than from hydroquinone treatments. However, the authors recommend that for accurate analysis the gold filtrate be evaporated to remove sulfites, or in the case of hydroquinone that the organic matter be removed, before precipitating palladium.

With the "modified parting method" appreciable amounts of silver remain with the parting acid residue. This is usually dissolved in the strong aqua regia. The final hydrochloric acid solution of gold, palladium, and platinum will sometimes retain traces of this silver.

To determine whether these small amounts of silver would interfere with the gold precipitation by means of hydroquinone, two solutions were prepared, each containing 25 mg. of silver and 25.01 mg. of gold. Each solution was evaporated 3 times in the presence of about 25 mg. of sodium chloride and a few cubic centimeters of hydrochloric acid. The residue was dissolved in about 20 cc. of slightly acid solution and the cold liquid filtered with Whatman's No. 42 filter paper. The residue was washed to a volume of 50 cc., 5 cc. of concentrated hydrochloric acid were added, and the precipitation was made with hydroquinone. The gold recovered weighed 25.01 and 24.99 mg.

Determination of Palladium

Very little information has been directly recorded in the literature with respect to the danger of loss of metal by burning palladium dimethylglyoxime. Tacit recognition of this difficulty has been made by various suggestions, such as wrapping the precipitate and filter paper in a second paper before ignition. The authors recommend two procedures which will avoid loss of palladium on ignition. The precipitate and paper may be burned very slowly, preferably by first charring in an oven with suitable temperature control. The method generally adopted by the authors is not an orthodox one but is justified, in that there is no appreciable loss of palladium and results are obtained in a much shorter time. The wet paper and the contents of the crucible are subjected to the full flame from a 17.5-cm. (7-inch) Meker burner. Then the paper and the contents are charred and ignited, after which the flame is again applied until the residue is converted to ash. If this manipulation is properly made, there is no visible evidence of the emission of carbon.

It is usually necessary to make two palladium precipitations in order to remove the platinum contamination. The palladium dimethylglyoxime and paper are treated with sulfuric acid and nitric acid to remove the organic matter. If too much sulfuric acid is fumed off, the palladium will bake out as a brown residue, but if there is not too much of this formed it will dissolve when water is added and the solution is boiled.

Determination of Platinum

Gilchrist (*4*) recommends the separation of palladium from platinum by oxidation in acid solution with sodium bromate, then adjusting the solution to pH 6 and boiling to coagulate the palladium dioxide. The authors attempted to adapt this method to the separation of these elements when they were present together in solutions which had been fumed with sulfuric and nitric acids and the nitric acid had been removed. Solutions such as these have been heated with bromate for more than 10 hours and invariably a heavy brown platinum oxide settled out when the solution was neutralized to pH 6 and boiled. Even after this brown precipitate dissolved in hydrochloric acid and the bromate added ag some of the brown material again appeared on neutraliz and boiling. Repeated treatments such as this will eventu remove the platinum, but under the above stated conditi the method is not a practical one.

Residue from Aqua Regia Treatment

This final residue should contain all the rhodium, iridi and iridosmine. Small traces of platinum and palladi are sometimes retained, but these may generally be neglec The authors have found that a 10-minute fusion will usu suffice to dissolve the final residue completely; in only case did any unfused substance remain. A sample of na platinum weighing 110 mg. was assayed and the residue maining after fusion examined under a microscope. It found to consist of three very small well-rounded grains metal resembling iridosmine which together weighed 0.1

If much iridosmine is present, the solution of the final r due may contain appreciable quantities of platinum deri from the native alloy, and, of course, this metal must isolated from the rhodium and iridium.

The separation of rhodium adopted by the authors is sentially that described by Gilchrist (*3*). In order to de mine whether this method would separate and determine little as a few tenths of a milligram, a sample of platin metals–bearing material containing 0.02 mg. of rhodium salted with 0.50 mg. of rhodium in solution form. The was assayed and the cupeled bead was treated as describe the procedure outlined below. The rhodium recove weighed 0.50 mg. When the acid solution is treated w hydrogen sulfide to precipitate the rhodium, the liquid sho be filtered even though it appears clear, because the lig brown precipitate may be finely dispersed.

The presence of osmium and ruthenium introduces difficulties, as these metals are converted to volatile oxi by the reagents used in the procedure. The authors rec mend that the determination of these metals be made o separate sample, and procedures for their analysis are be prepared.

The following recipe has been used by the authors fo period of a year, and determinations have been made on pl num-bearing materials from most of the important wo sources. The quantitative aspect of each stage of the pro dure has been reported by Beamish and Russell (*1*) and Bea ish, Russell, and Seath (*2*). Various additions have b made with a view to decreasing the time necessary for co plete analysis. In many platinum-bearing materials cert of the precious metals are present in very small proportio sometimes as low as a few hundredths of a per cent—for ample, native platinum very often contains only a few h dredths of a per cent of palladium and rhodium. Con quently, the total weight of platinum metals to be used analysis should not be much less than 100 mg. The p portion of silver should be about 15 to 1 of total platin metals.

Procedure

The bead is parted with 30 to 40 cc. of 95 per cent sulfuric ac keeping the temperature below boiling but sufficiently high ensure a uniform and rapid rate of parting. About 4 to 7 minu should suffice for the operation, and complete removal of t silver is not necessary. The acid is cooled and diluted to abo 175 cc. with hot water and the residue is filtered and thorough washed with hot water. Whatman's No. 42 is a suitable fil paper. The filtrate is evaporated and fumed to a volume of 4 5 cc. and hot water added to a volume of 200 cc. About 3 cc. 10 per cent sodium bromate solution are added and the liquid then boiled for about 25 minutes. The acidity of the soluti is reduced considerably by means of solid sodium bicarbona

and then 5 cc. more of sodium bromate are added. The liquid is again boiled for about 10 minutes and the neutralization carried to pH 6. The details of this manipulation are given by Beamish, Russell, and Seath (*2*).

The liquid is boiled to precipitate and coagulate the palladium dioxide, which is filtered and washed with freshly boiled distilled water, and the residue is added to a 125-cc. Pyrex beaker with a cover glass. The paper and contents are treated with 5 cc. of sulfuric acid and sufficient fuming nitric acid, and the organic matter is destroyed as usual. About 5 minutes should suffice for this operation. The solution is now diluted to about 40 cc. with water and a few drops of hydrochloric acid are added to precipitate the silver chloride, which is filtered off. If this precipitate is stained brown because of the presence of much palladium in the sample, the operation is repeated. The filtrate, which should now contain not more than 4 cc. of sulfuric acid per 100 cc. of solution, is treated with dimethylglyoxime to remove the palladium. This precipitate can be filtered through the same paper used for the palladium obtained from the aqua regia extract.

The residue obtained from the parting acid is washed several times with 50 per cent by weight ammonium acetate with intermittent hot-water washings. The ammonium acetate filtrate and washings are discarded. The residue and paper are added to a 125-cc. beaker with cover glass, treated with 30 cc. of aqua regia (3 to 1) and placed on a steam bath for about 2 hours. The solution is diluted and filtered and the paper and contents are washed thoroughly with hot water, after which the residue and paper are set aside for the fusion treatment. The aqua regia extract is taken to near dryness in the presence of 100 mg. of sodium chloride. The residue is treated with 3 small additions of hydrochloric acid to remove the nitric acid, then 25 cc. of hot water are added, and the mixture is allowed to stand with occasional stirring. The silver chloride is then filtered off.

If gold seems to have baked out, the paper and contents are burned, the gold is dissolved in aqua regia, the nitric acid is removed, water is added, and the gold solution is filtered into the original filtrate. This solution of 50 to 60 cc. is acidified with about 5 cc. of concentrated hydrochloric acid, and about 1 mg. of hydroquinone in aqueous solution is added for each milligram of gold present. The mixture is boiled gently for 5 minutes and the gold is filtered, washed, and heated. The filtrate and wash water, which should not exceed 175 cc., are treated directly with dimethylglyoxime. The yellow precipitate should appear in a minute or two if much palladium is present. The liquid is allowed to stand for about 30 minutes and then filtered.

Because platinum is very often carried in this precipitate, the paper and contents are dissolved by treatment with sulfuric acid and fuming nitric acid. If much platinum has been carried with the precipitate, it sometimes appears as metal after the treatment to destroy organic matter. In this case the residue is filtered off, burned, and treated with aqua regia, the nitric acid is removed with one or two additions of hydrochloric acid, and water is added. This is filtered into the palladium solution and the filtrate diluted to about 175 cc. Dimethylglyoxime is added to precipitate palladium. This precipitate and that from the parting acid are combined and the palladium is determined as metal.

The combined filtrates and wash water are evaporated and the sulfuric acid is fumed off. The beaker is held over the flame from a Meker burner for about 1 minute. The platinum is dissolved in aqua regia, the nitric acid is removed, water is added, and the solution is then filtered and washed to a volume of about 100 cc. If there is any evidence of undissolved platinum the paper and contents are burned, the residue is dissolved, the nitric acid is removed, and the aqueous solution is filtered into the original platinum solution. If the platinum is to be precipitated as the sulfide, the solution is acidified with 5 cc. of concentrated hydrochloric acid and hydrogen sulfide is passed into the gently boiling liquid for about 40 minutes. The platinum sulfide and paper are first dried, then ignited very slowly to avoid as much as possible the occlusion of sulfur. If the platinum is to be precipitated as metal, sodium formate is used in a solution of pH 6.

Where the gold filtrate shows no evidence of palladium dimethylglyoxime, a capillary drop of the platinum solution from which organic matter and nitric acid have been removed is treated with dimethylaminobenzilidine rhodanine. If a definite purple color is produced the platinum solution is treated with dimethylglyoxime to remove this small amount of palladium.

The final residue remaining after aqua regia treatment is placed in a silver crucible and carefully burned to an ash. The black residue is covered with about 3 grams of sodium peroxide and the mixture is melted and then maintained at a dull red heat for 15 minutes. If thin-walled crucibles are used, less time is required to dissolve the residue. The fused mass is allowed to cool, the crucible is placed in a 250-cc. Pyrex beaker, and water is added to dissolve the solid. The crucible is washed with water and carefully transferred to a small casserole, then cleaned with dilute nitric acid and with water. The liquid in the casserole is washed back into the original solution and heated, and sufficient nitric acid is added to dissolve the silver oxide.

If a heavy brown residue persists, indicating the presence of much rhodium, it is filtered off, the paper and residue are dissolved with about 6 to 7 cc. of sulfuric acid and fuming nitric acid, water is added, and the solution is transferred to the original beaker. If only a little rhodium is present, 6 to 7 cc. of concentrated sulfuric acid are added directly to the original solution, which is then evaporated and fumed to a volume of about 4 cc. About 175 cc. of hot water are added and the dioxides are precipitated and purified in the same manner as with the palladium dioxide from the parting acid. It is important to avoid the introduction of the sulfuric acid solution to the indicator bottle by means of the capillary tube. If this happens the neutralizing of the silver sulfate solution may inadvertently proceed to pH 7, and silver salts will separate.

The final solution is made up to exactly 100 cc., 50 cc. of which are treated with titanous chloride, as described by Gilchrist (*3*). It is best to make two precipitations of rhodium with titanous chloride, in each case treating the rhodium and paper in a 50-cc. beaker with 2.5 cc. of concentrated sulfuric acid. Care must be taken to wash down and fume off any nitric acid on the walls of the beaker before precipitation. The final titanous-rhodium precipitate and paper are dissolved and 20 cc. of water are added, followed by 2 cc. of concentrated hydrochloric acid. The solution is boiled very gently for 15 minutes, then diluted, and filtered. It is important to avoid loss of much water, otherwise the hydrochloric acid will be removed by the sulfuric acid. When very small amounts of rhodium are present, as very often occurs with native platinums, the pink color does not appear. The acid solution is finally diluted to about 75 cc. and a rapid stream of hydrogen sulfide is passed into the boiling liquid for about 40 minutes.

The second 50 cc. are treated with about 5 cc. of filtered 10 per cent sodium bromate solution and boiled for about 20 minutes. If the original liquid was a blue color it will turn to an amber. The acidity of the liquid is reduced somewhat with a filtered sodium bicarbonate solution, a few cubic centimeters of bromate are again added, and the liquid is boiled. Sodium bicarbonate solution is now added to reach pH 6. The dioxides of rhodium and iridium are precipitated and coagulated by boiling for 20 to 25 minutes, filtered, and washed with freshly boiled distilled water. The details of the determination are described by Gilchrist (*3*).

By this fusion with sodium peroxide the final residue from the aqua regia treatment is almost always completely dissolved and the residue obtained on final reduction with hydrogen will be the total rhodium and iridium. Any osmium present will pass off during the process.

Summary

If the assay bead is parted by the "modified parting method" the amount of platinum, rhodium, and iridium which is dissolved by the sulfuric acid can be neglected.

Strong aqua regia (3 to 1) will not attack cupeled rhodium or iridium, but will dissolve all but traces of platinum and palladium out of the final residue. When traces of palladium are associated with considerable proportions of gold, it is best to destroy the organic matter in the filtrate from gold precipitation before adding dimethylglyoxime. Solutions of platinum which have been fumed with sulfuric and nitric acids will yield a brown precipitate, very similar in appearance to hydrated palladium oxide, when the boiling solution is treated with sodium bromate and subsequently neutralized to pH 6.

The final bead residue of rhodium, iridium, and iridosmine can be completely dissolved by fused sodium peroxide.

Literature Cited

(1) Beamish, F. E., and Russell, J. J., Ind. Eng. Chem., Anal. Ed., 8, 141 (1936).
(2) Beamish, F. E., Russell, J. J., and Seath, J., *Ibid.*, 9, 174 (1937).
(3) Gilchrist, R., *Bur. Standards J. Research*, 9, 547 (1932).
(4) *Ibid.*, 12, 291 (1934).

Received July 8, 1937.

Determination of Copper, Zinc, and Lead in Silicate Rocks

E. B. SANDELL, School of Chemistry, Institute of Technology, University of Minnesota, Minneapolis, Minn.

THE colorimetric method here described for the determination of the small amounts of copper, zinc, and lead occurring in rocks is based on the use of dithizone (diphenylthiocarbazone, phenylazothionoformic acid phenylhydrazide), a reagent which is well suited for the purpose because of its great sensitivity. The procedure developed is based on the investigations of Hellmut Fischer and others on the use of dithizone for determining traces of heavy metals.

The sample is decomposed with hydrofluoric-perchloric acid and sodium carbonate, and the resulting solutions are extracted with a carbon tetrachloride solution of dithizone in a slightly basic medium in the presence of citrate. Copper, zinc, and lead form dithizonates which dissolve in the carbon tetrachloride, whereas the major constituents of the rock remain in the aqueous phase. The carbon tetrachloride layer is separated and shaken with 0.01 *N* hydrochloric acid, whereby the dithizonates of zinc and lead are decomposed, giving the chlorides of these metals in the aqueous phase; the copper complex is not decomposed by the dilute acid and remains in the carbon tetrachloride. The latter is evaporated to dryness, and the residue is ignited to cupric oxide, which is dissolved in hydrochloric acid; the copper in this solution can be determined by extractive titration with dithizone–carbon tetrachloride at a pH of approximately 3.5, or by mixed-color colorimetry with the same reagent in acid solution. The 0.01 *N* hydrochloric acid solution containing the zinc and lead is made up to volume and the two metals are determined colorimetrically in separate aliquots with dithizone: zinc by the mixed color technic at a pH of about 4.1 in the presence of thiosulfate to prevent the interference of lead, and lead in an ammoniacal solution containing potassium cyanide to prevent the reaction of zinc.

Discussion of the Procedure

THE DECOMPOSITION. After the hydrofluoric-perchloric acid decomposition of the sample there may remain undecomposed silicates, quartz, iron ores, and barium sulfate. If the latter substance is present it will contain most of the lead in the sample. The undecomposed material is filtered off, fused with sodium carbonate, and the melt is leached with water and filtered; the washed residue is treated with hydrofluoric and perchloric acids to remove any silica that may be present, and is finally dissolved in hydrochloric acid. There are thus obtained three solutions which are extracted separately with dithizone after adjustment of the pH as described in the procedure.

THE EXTRACTION. The separation of copper, zinc, and lead from most of the other constituents of the sample in the main solution is effected by making the dithizone–carbon tetrachloride extraction in a citrate solution containing a slight excess of ammonia (pH approximately 8.5). The extraction of zinc and lead from such a solution is virtually complete when an excess of the reagent is used as described in the procedure. The pH of the solution should not be unnecessarily high, because then copper may be extracted in the enol form of the dithizone complex instead of the keto form, which is undesirable.

The alkalies, alkaline earths, magnesium, ferric iron, aluminum, beryllium, titanium, zirconium, chromium (III and VI), tin (IV), antimony (III and V), arsenic (III and V), thallium (III), cerium, thorium, and platinum (IV) do not react with dithizone and are not extracted. Nickel, cobalt, cadmium, mercury, bismuth, tin (II), thallium (I), and palladium react under the conditions described. Manganese is extracted at least in part and it seems that ferrous iron behaves similarly; silver is extracted partially. Ferric iron oxidizes the reag to some extent, especially in basic solution, imparting a brov ish color to the carbon tetrachloride layer.

SEPARATION OF COPPER FROM LEAD AND ZINC. Wher carbon tetrachloride solution of the keto forms of cup copper, zinc, and lead dithizonate is shaken with a 1 to 1 (approximately 0.01 *N*) solution of hydrochloric acid, copper complex remains virtually unchanged in the carb tetrachloride, but the zinc and lead complexes are deco posed:

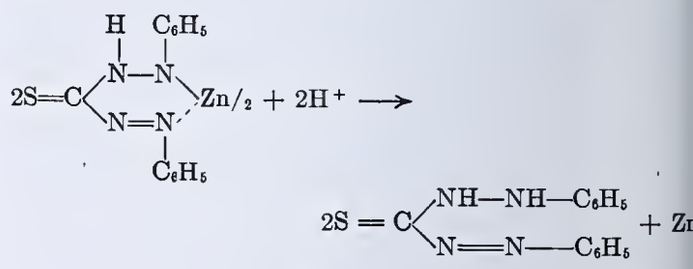

Zinc and lead can thus be recovered quantitatively fr the carbon tetrachloride solution even when an excess dithizone is present. The lead complex is more easily composed than the corresponding zinc compound. The a concentration should not be less than 0.01 *N*, because th the extraction of zinc becomes difficult. The keto form copper dithizonate is practically not affected when the carb tetrachloride solution is shaken with the dilute hydrochlo acid, as the following experiment shows:

Ten milliliters of carbon tetrachloride containing copper ke dithizonate equivalent to 100 γ of copper were shaken with t successive 10-ml. portions of 1 to 1000 hydrochloric acid (1 min each time). The total amount of copper in the hydrochlo acid after this treatment was found to be 1.5 γ. When the periment was repeated with the addition of 0.5 ml. of 0.01 cent dithizone to the 10 ml. of the carbon tetrachloride solut of the copper complex, the amount of copper in the 20 ml. of 0.01 hydrochloric acid was found to be 0.5 γ or less. The last periment corresponds to the conditions of an actual determi tion, because more or less of the excess reagent will be present the carbon tetrachloride. Accordingly, the amount of copp lost in the separation will be small enough to neglect in the m jority of cases.

It is important that the copper be present in the form of t keto and not the enol complex. As shown by Fischer (copper can form both keto and enol dithizone complexes, t enol tautomer (yellow-brown) being stable in basic solutio and the keto (red-violet) in acid. When a carbon tetrachl ride solution of the enol form is shaken with a dilute aci transformation into the keto form occurs:

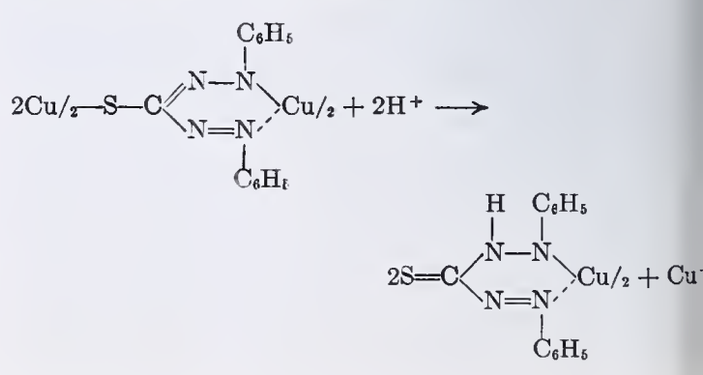

The separation of copper from zinc and lead will then fail, less an excess of dithizone is present to combine with the erated cupric ions. Although not essential, it is advantaous to prevent the formation of the copper enol complex in e extraction of the sample. This can usually be accomplished avoiding the addition of too much ammonia, and too g shaking with the first portions of the reagent. The her the pH of the aqueous phase the greater will be the locity of migration of the dithizone itself from the carbon rachloride into the aqueous phase, and the resulting deiency of the reagent in the carbon tetrachloride favors the mation of the enol tautomer. However, formation of the ol complex does no harm if sufficient reagent is added be- e shaking with 0.01 *N* hydrochloric acid to combine with e cupric ions liberated.

Nickel and cobalt remain in the carbon tetrachloride solun on treatment with 0.01 *N* hydrochloric acid. As shown Willoughby, Wilkins, and Kraemer (*5*), bismuth dithizote is stable in dilute acid solution (pH = 2) and these authors ke use of this fact in separating lead from bismuth. Cadum accompanies zinc and lead in the acid separation.

Determination of Copper. The first step in the deternation of copper is the recovery of the element from the bon tetrachloride solution which has been shaken with e dilute hydrochloric acid to remove zinc and lead. This n be done by evaporating off the organic solvent, and ignit- the residue to destroy organic matter. The cupric oxide obtained is dissolved in hydrochloric acid. The solution ll also contain nickel, cobalt, and more or less silver, if this ment is present in the sample. Any reagent which gives sensitive color reaction with copper, and which does not ct with nickel, cobalt, and silver can be used to determine e element. It is convenient to use dithizone itself for the rpose. The determination can be made in a variety of ys. The most accurate method (except for very small ounts) is that of extractive titration (*2*), which is carried t in the following manner:

An aliquot part of the hydrochloric acid solution is adjusted a pH of 3.5 and shaken with successive portions of 0.001 per t reagent in carbon tetrachloride, each portion being drawn before the next is added, until the change in color of the carn tetrachloride layer shows that all the element has reacted. this pH the reaction between the reagent and the copper is tually complete within 30 to 45 seconds when the mixture is orously shaken. As long as an excess of copper remains in e aqueous phase the final color of the carbon tetrachloride er is red-violet (the color of the keto form of the cupric comx). When all the copper has reacted, the color of the carbon rachloride remains green after prolonged shaking. The color nsition in successive portions of carbon tetrachloride from l-violet, through various shades of purple and blue, to blueen or green takes place over an interval of about 1.5 ml. of 01 per cent reagent, corresponding to approximately 1.5 γ copper, when the mixture is well shaken for 30 to 45 seconds er each 0.5-ml. addition.

The results obtained in applying the extractive titration ethod to the determination of amounts of copper ranging m 3 to 20 γ are indicated in Figure 1. In this graph the ints represent the volume of dithizone required for titran to the intermediate blue color representing roughly equal ounts of copper dithizonate and reagent. The straight e showing the relation between the amount of copper and e volume of reagent intersects the Y-axis at approximately 5 ml. This then represents the "indicator" blank which ust be subtracted from the volume of reagent used to obin the volume actually reacting with the copper. The rrection is empirical, since a small amount of copper reains in solution after the end point represented by the intmediate blue color has been reached, and on the other hand, certain amount of unreacted reagent is drawn off with the rbon tetrachloride before the end point is attained; these

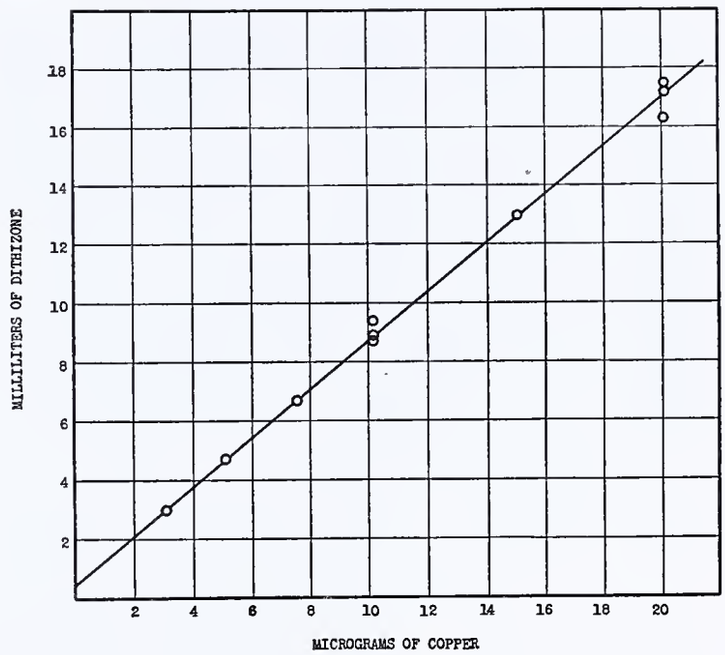

Figure 1. Determination of Copper by Extractive Titration

amounts approximately cancel each other. The uncertainty in the location of the end point need not exceed 0.5 γ of copper, corresponding to ± 0.0005 per cent when an aliquot representing 0.1 gram of sample is used. The largest error in the results given in Figure 1, some of which were obtained by adding nearly all the reagent required in one portion, is about 0.75 γ. Doubtless the accuracy can be improved by shaking the mixture a little longer with a moderate excess of reagent at the end point, and then determining more exactly the excess of reagent present by adding dithizone solution to a measured volume of copper dithizonate of known concentration (such as the first portions of carbon tetrachloride extract obtained in the titration) until the hues of the two solutions are identical.

Nickel and cobalt do not react at the pH at which the copper titration is made. Bismuth does react, but not until the copper has reacted, so that it does not interfere. In the presence of bismuth the color change in the titration is from red-violet to brownish instead of green; the end point can still be determined with fair precision. Silver does not react if iodide or thiocyanate is added. Zinc reacts slowly at pH 3.5, giving rise to a vague color change in the titration of copper. In the procedure given zinc is removed before the titration is made.

Copper can also be determined by the mixed color method in which the solution of adjusted acidity (pH approximately 3) is shaken with an excess of a 0.001 per cent carbon tetrachloride solution of dithizone, and the hue of the carbon tetrachloride solution, varying from greenish blue to violetred, is compared with standards similarly prepared. This method is more suitable than the titration method for the determination of a few thousandths of a per cent of copper, and can be used for larger amounts. As little as 0.0002 per cent of copper can be determined in a 10-mg. sample when a suitably small volume of the reagent is used. The mixedcolor technic is not applicable when bismuth is present, but this element is not likely to be encountered in silicate rocks in interfering amounts.

The results obtained in the determination of added amounts of copper in a synthetic basic rock by the extractive titration method are given in Table I. In most cases the small amount of copper originally present in the synthetic sample and introduced by the reagents was removed from the solution resulting from the decomposition by extraction with dithizone,

and the indicated amounts of the metal were then added; in two cases the known amount of copper was added to the sample before decomposition, and the amount contributed by the latter was found from a blank. The results obtained are low (approximately 10 per cent). All these values were obtained by standardizing the dithizone solution directly against a copper solution. More nearly correct results can be obtained by standardizing the dithizone solution against a known amount of copper which has been carried through the procedure. Two empirical standardizations carried out in this manner with 20 γ of copper gave the factors 1.09 and 1.065 as compared with the direct standardization factor 1.00. When the empirically determined factor is used in the calculations, the errors listed in Table I are appreciably reduced.

TABLE I. DETERMINATION OF COPPER IN SYNTHETIC BASIC ROCK

No.	Addition	Cu Present %	Cu Added %	Cu Found %	Error %
1	.....	0.000[a]	0.004	0.003	−0.001
2	.....	0.000[a]	0.004	0.0035[b]	−0.0005
3	.....	0.0015	0.010	0.0105	−0.001
4	.....	0.000[a]	0.012	0.0115	−0.0005
5	.....	0.000[a]	0.024	0.0215	−0.0025
6	.....	0.0015	0.024	0.0235	−0.002
7	.....	0.000[a]	0.050	0.046	−0.004
8	.....	0.000[a]	0.050	0.0455	−0.0045
9	0.2% Ni, 0.1% Co	0.000[a]	0.010	0.009	−0.001
10	0.1% Zn, 0.05% Pb	0.000[a]	0.010	0.0095	−0.0005
11	0.5% Cr^{VI}	0.000[a]	0.010	0.010	0.000
12	0.4% VV	0.000[a]	0.010	0.0095	−0.0005
13	0.1% Sn^{II}, 0.01% Ag	0.012[c]	0.000	0.012[d]	0.000

[a] Original copper removed by extraction with dithizone.
[b] All of solution titrated; 2/5 aliquot in others.
[c] Sample of gabbro.
[d] Determination by mixed-color technic in the presence of iodide.

DETERMINATION OF ZINC. The determination of zinc in the 0.01 N hydrochloric acid extract of the carbon tetrachloride solution of the heavy metal dithizonates is carried out by adjusting the pH of an aliquot portion to 4 to 4.3, shaking with an excess of 0.001 per cent dithizone in carbon tetrachloride, and comparing the hue of the latter solution with a series of standards prepared in the same way. The interference of lead is prevented by adding a complex-forming substance such as an alkali iodide (together with a little sulfite to prevent the liberation of iodine which would react with the reagent) or thiosulfate. The results in Table II were obtained with the use of potassium iodide to prevent the reaction of lead. After the experimental work on zinc had been completed, there appeared a paper by Fischer and Leopoldi (*3*) in which it was shown that sodium thiosulfate was an excellent substance for preventing the interference of lead, and most other metals as well, under proper conditions. Comparison of the use of thiosulfate and iodide in the determination of zinc in ten igneous rocks showed that either can be used with equally good results. The small amounts of lead—of the order of a few thousandths of a per cent—usually encountered in silicate rocks hardly lead to a perceptible coloration of the reagent in the weakly acid solution in which the zinc determination is made, but it is not safe to depend on the adjustment of the pH as the sole means of preventing interference by lead. If the pH of the solution is too high neither thiosulfate nor iodide prevents the reaction of lead with the reagent.

The reaction between zinc ions and dithizone at pH 4 to 4.5 is slow and is moreover incomplete even after long shaking, so that it is not practicable to apply the extractive titration method. However, it is possible to determine zinc by a colorimetric titration in which a standard solution of the metal is added to a comparison solution containing the same amount of a carbon tetrachloride solution of the reagent as the unknown until, after prolonged shaking, the hue of known and unknown match. This method demands care in its application because of the slowness with which zinc reacts, an it is perhaps safer and as rapid to use the standard serie method in which the period of shaking is the same for bot the unknown and the known.

The results in Table II (obtained by the standard serie method) show that zinc can be determined with satisfactor accuracy in the presence of the major and minor rock cor stituents.

DETERMINATION OF LEAD. Lead is determined in a simpl manner in the 0.01 N acid extract by adding potassium cya nide and ammonia to an aliquot portion and shaking with small volume of a 0.001 per cent solution of dithizone. Th cyanide prevents the reaction of zinc (and any small amount of other metals that may be present). The only other el ments reacting in alkaline cyanide medium as shown b Fischer are tin(II), bismuth, and thallium(I). Divalent ti or univalent thallium cannot be present at this stage no can bismuth, which is separated from lead and zinc by treat ment of the original carbon tetrachloride extract with 0.01 N hydrochloric acid. Copper, except in very small amount is an undesirable element in a solution in which lead is to b determined, because it tends to give a yellow-brown oxida tion product with dithizone. In the procedure given, coppe is not present in the solution used for the lead determination Ferric iron must not be present because it oxidizes the reagent giving a yellowish brown carbon tetrachloride layer; th lead determination then becomes difficult or impossible be cause of the difference in hue between the unknown and th standards.

By adding a little ammonia to the cyanide medium th complete extraction of the excess dithizone from the carbo tetrachloride layer is assured, and the amount of lead is in dicated by the intensity of the color imparted by the lea dithizonate which remains dissolved in the carbon tetrachlo ride. The color comparison is most conveniently made b using a series of standards contained in flat-bottomed glass

TABLE II. DETERMINATION OF ZINC IN SYNTHETIC ACID AN BASIC ROCK

No.	Addition	Zn Present %	Zn Added %	Zn Found %	Error %
		Acid Rock			
1		0.000[a]	0.0024	0.0026	+0.000
2		0.000[a]	0.005	0.005	0.000
3		0.002[b]	0.002	0.0045	+0.000
4		0.002[b]	0.005	0.007	0.000
5		0.002[b]	0.006	0.009	+0.001
6		0.000[a]	0.0105	0.0105	0.000
7		0.000[a]	0.0145	0.016	+0.001
8	1% Mn	0.002[b]	0.002	0.005	+0.001
9	0.05% Cu	0.002[b]	0.004	0.0065	+0.000
10		0.0045	0.001	0.0050	−0.000
11		0.0045	0.0035	0.009	+0.001
12		0.0045	0.0045	0.0105	+0.001
13		0.0045	0.007	0.012	+0.000
14	1% Mn	0.0045	0.0035	0.009	+0.001
15	0.1% Pb	0.0045	0.0035	0.0095	+0.001
16	0.05% Cu	0.0045	0.0035	0.007	−0.001
17	0.05% Cu, 0.05% Pb	0.0045	0.0035	0.007	−0.001
18	0.05% Pb	0.000[a]	0.0024	0.0026	+0.000
19	0.08% Cu, 0.05% Pb, 0.3% Ni, 0.1% Co, 1% Mn	0.000[a]	0.0055	0.0065	+0.001
20	0.05% Cu, 0.05% Pb, 0.25% Ni, 0.1% Co, 0.5% Mn	0.000[a]	0.010	0.011	+0.001
		Basic Rock			
21		0.000[a]	0.005	0.005	0.000
22		0.005	0.0055	0.010	−0.000
23		0.000[a]	0.010	0.010	0.000
24		0.005	0.010	0.015	0.000
25	0.2% Pb	0.005	0.000	0.004	−0.001
26	0.1% Cd	0.000[a]	0.005	0.006	+0.001
27	0.05% Cu, 0.05% Pb	0.000[a]	0.005	0.006	+0.001
28	0.05% Cu, 0.1% Pb, 0.2% Ni, 0.05% Co	0.000[a]	0.005	0.006	+0.001
29	0.03% Cr^{VI}, 0.05% VV, 0.02% Mo^{VI}	0.000[a]	0.0055	0.0055	0.000

[a] Original zinc removed by extraction with dithizone.
[b] Sodium carbonate fusion not made.

ppered tubes of 25- to 30-ml. capacity. In using an aliquot responding to 0.05 gram of sample as little as 0.0002 per t of lead can be detected. The main hindrance to the urate determination of very small amounts of lead is the stence of an appreciable blank.

In testing the method for lead, natural rock samples were d because the synthetic samples showed much higher ounts of the metal. The results are summarized in Table I. The blank for lead in the reagents amounted to 0.0010 0.0001 per cent.

The reproducibility of the method proposed can be judged m the data in Table IV, which are a part of those obtained determining copper, zinc, and lead in a number of Minnea rocks. It is more difficult than might be expected to tain good agreement in duplicates. Differences of 20 per t in the determination of copper and zinc can occur.

Apparatus

The only special apparatus needed is a set of flat-bottomed ss-stoppered color-comparison tubes of approximately ml. capacity (diameter 1.8 cm., height 15 cm.).

The glassware used should be zinc- and lead-free.

Reagents and Standard Solutions

DITHIZONE, 0.01 per cent solution. Dissolve 10 mg. of the e product in 100 ml. of reagent quality carbon tetrachloride. ne products of dithizone may be used as purchased without ification. A product which meets the following test is satistory for use in the method: To 2 or 3 ml. of an approximately 01 per cent solution in carbon tetrachloride in a glass-stoppered e add 5 ml. of water, a few drops of 5 per cent potassium nide solution, and 2 drops of concentrated ammonium hyxide. Shake vigorously for 10 to 15 seconds and allow the bon tetrachloride to settle. If the lower layer is colorless or ws only an extremely faint yellowish tinge when viewed inst a white background, the reagent is sufficiently pure for purpose. Impure dithizone can be purified as described by cher and Leopoldi (4).

DITHIZONE, 0.001 per cent solution. Dilute the 0.01 per cent ution with nine times its volume of reagent quality carbon rachloride. The dilute solution decomposes slowly, especially xposed to light, and it is best to prepare the solution the same y it is to be used.

WATER. Redistill in glass (preferably Pyrex) apparatus and serve in a Pyrex flask.

PERCHLORIC ACID, 70 per cent. If lead is to be determined it is ferable to vacuum-redistill the analytical grade acid.

HYDROFLUORIC ACID. The analytical reagent is likely to contain d and is best purified by distillation from platinum apparatus.

HYDROCHLORIC ACID, 1 to 1. It is preferable to use freshly tilled constant-boiling acid, stored in Pyrex.

HYDROCHLORIC ACID, 1 to 1000. Dilute the constant-boiling d with 500 times its volume of redistilled water.

AMMONIA, specific gravity 0.9. Saturate redistilled water with monia gas and keep the solution in a ceresin-coated bottle.

SODIUM CITRATE, 10 per cent. Dissolve 10 grams of trisodium rate in 100 ml. of water and add 1 ml. of concentrated amnium hydroxide. Shake the solution with small portions of 0.01 cent dithizone in carbon tetrachloride, drawing off each portn before the next is added, until the carbon tetrachloride is ored only faintly pink and the aqueous layer is a strong yellowwn. Then continue the extraction with carbon tetrachloride ne until the latter shows only a pinkish tinge on prolonged aking. Preserve the solution in a wax-lined bottle. The exs dithizone in the solution need not be removed; it soon decomposes, giving a nearly colorless solution.

SODIUM ACETATE, 2 *N*. Prepare from a good grade of salt, conning minimal amounts of copper and zinc. The solution can purified if desired by shaking with dithizone in carbon tetraloride, but generally this is unnecessary.

SODIUM ACETATE–ACETIC ACID BUFFER, pH ca. 4.1. Mix equal lumes of 1 *N* sodium acetate and 4 *N* acetic acid.

SODIUM THIOSULFATE, 50 grams $Na_2S_2O_3 \cdot 5H_2O$ in 100 ml. of ter.

POTASSIUM CYANIDE, 5 per cent. Dissolve 5 grams of leade salt in 100 ml. of water. The solution should be tested for d as follows: Dilute 1 ml. with 2 to 3 ml. of water, add 2 drops pure ammonia water, and shake with 1 or 2 ml. of 0.001 per cent hizone solution. The carbon tetrachloride layer should show trace of pink color.

TABLE III. DETERMINATION OF LEAD

No.	Sample	Pb Present %	Pb Added %	Pb Found %	Error %
1	Gabbro	0.0000[a]	0.0000	0.0000	0.0000
2	Granite	0.0000[a]	0.0004	0.00025	−0.00015
3	Gabbro	0.0000[a]	0.0004	0.0004	0.0000
4	Diabase	0.0000[a]	0.0004	0.0002	−0.0002
5	Granite	0.0000[a]	0.0008	0.0008	0.0000
6	Diabase	0.0000[a]	0.0008	0.0007	−0.0001
7	Granite	0.0015	0.0020	0.0035	0.0000
8	Gabbro	0.0007	0.0040	0.0041	−0.0006
9	Granite	0.0015	0.0040	0.0057	+0.0002
10	Granite	0.0015	0.0080	0.009	−0.0005
11	Granite + 0.2% Zn	0.0015	0.0040	0.0057	+0.0002
12	Granite + 0.05% Cu	0.0000[a]	0.0040	0.0037	−0.0003
13	Granite + 0.4 % Cr^{III}, 0.6% Ba, 0.25% S[b]	0.0015	0.0040	0.0051	−0.0004
14	Granite + 0.01% Tl^{II}, 0.02% Ag, 1% Sn^{II}	0.0015	0.0000	0.0012	−0.0003

[a] Original lead of sample removed by extraction with dithizone.
[b] Nitric acid used in place of perchloric acid in the decomposition.

TABLE IV. DETERMINATIONS OF COPPER, ZINC, AND LEAD IN IGNEOUS ROCKS

Rock	Cu %	Zn %	Pb %
Granite	0.002[a] 0.0015[b]	0.003[a] 0.006	0.0015 0.0016
Granite	0.013[b] 0.0105[b]	0.007[a] 0.007 0.007	0.0027 0.0026
Granodiorite	0.0045[a] 0.004[b]	0.0055[a] 0.007	0.002 0.0022
Gabbro	0.012[b] 0.0135[b]	0.0095 0.0105 0.0105	0.0008 0.0006
Diabase	0.0255[a] 0.023[b]	0.0175 0.015 0.016	0.0025 0.0021
Diabase	0.022[b] 0.021[b]	0.016 0.0135 0.015	0.0005 0.0004

[a] Sodium carbonate fusion not made.
[b] Copper determined by mixed-color colorimetry, others by colorimetric titration.

SODIUM CARBONATE, anhydrous. If necessary, the reagent quality salt can be freed from lead by shaking a 5 to 10 per cent solution with precipitated calcium carbonate (0.5 gram per 100 ml.) for 5 or 10 minutes, filtering, evaporating the solution in platinum, and weakly igniting the residue.

STANDARD COPPER SOLUTION, 0.001 per cent. Prepare by diluting a stronger copper solution which has been obtained by weighing out uneffloresced copper sulfate pentahydrate crystals; add sufficient hydrochloric acid to make the acidity approximately 0.01 *N*.

STANDARD ZINC SOLUTION, 0.001 per cent. Prepare by diluting a stronger zinc solution which has been obtained by dissolving pure zinc metal in excess hydrochloric acid; add sufficient hydrochloric acid to make the acidity 0.01 *N*.

STANDARD LEAD SOLUTION, 0.001 per cent. Prepare from a stronger lead solution obtained by weighing out dry lead nitrate. Add enough hydrochloric acid to make the final acid concentration 0.01 *N*. Preserve the solution in a Pyrex bottle. It is important that the final solution be slightly acid, because otherwise lead will be adsorbed by the glass.

Procedure

Weigh 0.25 gram of 100-mesh rock powder into a small platinum dish, and add 0.5 ml. of 70 per cent perchloric acid and 5 ml. of 1 to 1 hydrofluoric acid. Heat on a low-temperature hot plate, stirring occasionally with a platinum wire if the powder cakes, until the solution has evaporated to dryness and the excess of perchloric acid has been expelled. Then add 0.5 ml. of perchloric acid together with 0.5 to 1 ml. of water, again evaporate to dryness and expel the excess of acid. To the residue add 2 ml. of 1 to 1 hydrochloric acid and 5 ml. of water, and warm gently, if necessary, to bring all soluble material into solution. Next add 5 ml. of 10 per cent sodium citrate solution, cool to room temperature, and add dropwise concentrated ammonium hydroxide until the solution becomes basic to litmus paper, and finally an excess of 0.25 to 0.3 ml. If the solution became appreciably turbid on the addition of ammonia it is well to let it stand for 10 or 15 minutes before beginning the filtration.

Filter the solution through a small (4 or 5 cm. in diameter) filter paper of medium texture, transfer any residue in the dish to the paper, and wash with three or four 1-ml. portions of cold water containing a drop of ammonia and sodium citrate solution. If the filtrate is turbid or becomes so on standing, refilter it. Reserve the filtered solution (solution 1). Ignite the paper and its contents in a platinum crucible, avoiding an unnecessarily high temperature. Cool, mix the residue with 0.15 gram of sodium carbonate, fuse, and add 2 or 3 ml. of water to the cooled melt. Warm to hasten disintegration of the melt, and filter through a 4-cm. paper, keeping most of the insoluble material in the crucible. Rinse the crucible and wash the filter well with small portions of cold water totaling 8 to 10 ml. Reserve the filtrate (solution 2) and transfer the filter paper and its contents to the platinum crucible previously used. Char the paper, burn off the carbon at a low temperature, add 1 to 1.5 ml. of 1 to 1 hydrofluoric acid and 2 drops of 70 per cent perchloric acid, evaporate to dryness, and expel the excess perchloric acid. Add a few drops of water and 1 or 2 of perchloric acid, again evaporate to dryness, and expel the excess acid. To the residue add 0.5 to 1 ml. of 1 to 1 hydrochloric acid and 2 or 3 ml. of water. Warm to bring all the residue into solution. (If any insoluble material remains, filter it off and fuse again with sodium carbonate.) Add 0.5 to 1 ml. of 10 per cent sodium citrate to the solution and then ammonia in a 3- to 4-drop excess over that required to give a basic reaction with litmus (solution 3).

Transfer the main solution (solution 1) to a separatory funnel of suitable size, add 5 ml. of 0.01 per cent dithizone solution, and shake for 0.5 minute; if the carbon tetrachloride is green at the end of this time shake for an additional half minute. Allow the carbon tetrachloride to settle and draw it off into another separatory funnel, leaving a few drops in the first funnel to prevent loss of aqueous phase. Unless the separated carbon tetrachloride is distinctly green, showing that an excess of reagent is present, add another 5-ml. portion of 0.01 per cent reagent to the aqueous solution, and shake vigorously for 30 to 45 seconds, draw off the carbon tetrachloride, and continue in this manner until the last 5-ml. portion of dithizone remains distinctly green after being shaken vigorously for 45 to 60 seconds. Next extract the solution of the leached sodium carbonate melt (solution 3) in the same manner, using 2-ml. portions of reagent, and combine these extracts with those from the main portion. There now remains the filtrate from the sodium carbonate leach (solution 2) which had best be extracted as a precautionary measure. Add to it 0.5 ml. of sodium citrate solution and a drop of thymol blue, and then dilute hydrochloric acid until the indicator shows the greenish intermediate color. Extract with 2 ml. of reagent, shaking for 1 minute, and add this extract to the others.

If the combined extracts from solutions 1, 2, and 3 contain any drops of aqueous phase, draw off the carbon tetrachloride layer into a clean separatory funnel and wash any small volume of aqueous solution with a few drops of carbon tetrachloride. It is important that the separated carbon tetrachloride be free from droplets of aqueous solution, because iron so introduced will oxidize the reagent and lead to difficulties in the determination of lead. To separate zinc and lead from copper, add 10 ml. of 1 to 1000 hydrochloric acid to the combined carbon tetrachloride extracts and shake vigorously for 1 minute. If the carbon tetrachloride remains red on shaking and does not become greenish or purple, add sufficient dithizone solution to change the red to a bluish or purplish color.

Draw off the carbon tetrachloride layer into another separatory funnel and again shake vigorously for a full minute with 10 to 12 ml. of 1 to 1000 hydrochloric acid. If the volume of the carbon tetrachloride phase is greater than 15 or 20 ml. it is advisable to shake for 2 minutes the last time to ensure the complete extraction of zinc. Combine the second portion of acid extract with the first, add a few drops of carbon tetrachloride to remove any droplets of colored carbon tetrachloride, transfer to a 25-ml. volumetric flask, and make up to the mark with 1 to 1000 hydrochloric acid. This solution contains all the zinc and lead of the sample. Run the carbon tetrachloride solution which has been washed with the dilute hydrochloric acid into a silica dish. This solution contains the copper of the sample.

Determination of Copper. Evaporate to dryness the carbon tetrachloride solution containing the copper dithizonate (which has been extracted with 0.01 N hydrochloric acid to remove zinc and lead), add 3 or 4 drops of 1 to 1 nitric acid to moisten the residue, evaporate, and ignite gently to destroy all organic material. To the cold dish add 0.5 to 0.75 ml. of concentrated hydrochloric acid, and by means of a stirring rod rub the acid over the interior of the dish so that all the cupric oxide will be dissolved. The intensity of the yellow color of the solution gives an indication of the amount of copper, provided that much nickel is not present; with less than about 0.01 mg. of copper (corresponding to 0.004 per cent in the sample) hardly any color is apparent. Add water, transfer the solution to 25-ml. volumetric flask, and make up to the mark.

Copper may be determined in this solution by either procedu (*a*) or (*b*). The first procedure is better suited for the determin tion of very small amounts of the metal, and the second for larg amounts which are to be determined as accurately as possibl However, procedure (*a*) will generally be found satisfactory; is not applicable when bismuth is present.

(*a*) Mixed Color Method. Unless the color of the conce trated hydrochloric acid solution indicated that only a very sma quantity of copper is present, it is advisable to determine approx mately in a preliminary test the amount of the metal in the sol tion in order to avoid the necessity for preparing a large numb of standards. To do this, measure 1 ml. of the mixed solutio into a color-comparison tube, dilute with 3 or 4 ml. of water, ad a drop of methyl orange indicator solution, and then sodiu acetate (conveniently a 2 N solution is first used and then or which is 0.1 or 0.2 N) until the color of the indicator just begir to deviate from the full red of the acid form (pH approximatel 3). Run in 5 ml. of 0.001 per cent dithizone solution and shak vigorously for 1 minute. The quantity of copper can be est mated from the hue of the carbon tetrachloride layer: 1 γ, green with bluish tinge; 2 γ, blue-green; 3 γ, purplish gray; 4 γ, violet-purple; 5 γ, red-violet or violet.

Having determined the approximate percentage of coppe transfer 5 ml. (for less than 0.01 per cent) or 2 ml. (for 0.01 t 0.02 per cent or slightly more) of the mixed solution to a colo comparison tube, and in similar tubes prepare a series of stanc ards of which adjacent numbers differ by 0.002 per cent of coppe Add sufficient hydrochloric acid to the standards to make the acidity roughly the same as that of the unknown, and adjust th volumes so that all are approximately equal. Add sodium ace tate solution until methyl orange shows a slight deviation fro the full acid color. Then add 5.0 ml. of 0.001 per cent dithizon solution to standards and unknown, shake all the tubes simu taneously for 1 to 1.5 minutes, and compare transversely agains a white background. If silver or bismuth is present the hue c the unknown cannot be matched with the standards. The inter ference of silver can be prevented by adding 2 or 3 drops c 1 per cent sodium bisulfite solution and 25 mg. of potassiu iodide to each of the tubes, again shaking for 0.5 minute an comparing.

It appears that the results obtained by following the above pro cedure are slightly low (see Table I). Possibly the values can b corrected by increasing them by 10 per cent, but it is better t obtain the correction factor by carrying 50 γ of copper throug the procedure. The final percentage is to be corrected for th copper in the reagents as determined in a blank.

(*b*) Extractive Titration. To save time it is advisable t make a rough preliminary titration or to proceed as in (*a*) to fin the approximate amount of copper present.

Pipet 10 ml. (for less than 0.03 per cent of copper) of the hy drochloric acid solution which has been diluted to 25 ml. into separatory funnel of suitable size, add a drop of methyl orange and adjust the pH to approximately 3.5 by adding sodium ace tate solution; it is preferable to use a buffer solution of pH 3. containing methyl orange for comparison in adjusting the acidit of the solution to be titrated. Now run in nearly the require volume of 0.001 per cent dithizone solution from a buret, shak vigorously for 1 minute, allow the carbon tetrachloride to settle and draw it off as completely as possible. Finish the titratio by adding the reagent in 0.5-ml. portions, shaking vigorusl for 45 seconds each time. Near the end point it is convenient to draw off each successive small portion of carbon tetrachlorid into a small vial so that the change in color can be noted better.

Take as marking the end point the 0.5-ml. portion of reagent which becomes blue after shaking the specified time. The next 0.5-ml. portion should show a distinct green tinge after thorough shaking. Deduct 0.5 ml. from the volume of standard solution required as the "indicator" correction. Standardize the dithizone solution in the same way against a known amount of copper which has been carried through the procedure. This may be done conveniently by adding 50 γ of copper to the extracted solution of the sample, and using a 10/25 aliquot of the final hydrochloric acid solution for the titration. Apply the correction for the copper in the reagents as determined in a blank.

Determination of Zinc. It is advantageous to determine first the approximate percentage of zinc present. Transfer 1 ml. of the 0.01 N hydrochloric acid extract, which has been diluted to 25 ml., to a color-comparison tube, add 1 ml. of acetic acid-acetate buffer of pH approximately 4.1, 3 ml. of water, and 0.10 ml. of sodium thiosulfate solution. Shake vigorously with 5 ml. of 0.001 per cent dithizone for 1 minute. The quantity of zinc present can be roughly estimated from the color of the carbon tetrachloride: 1 γ, blue; 2 γ, purplish violet; 3 γ, violet; 4 and 5 γ, red-violet.

Having determined the range of the zinc percentage, measure ml. (for less than 0.01 per cent of zinc) or 2 ml. (for 0.01 to 0.025 r cent) of the 0.01 N hydrochloric acid solution into a tube, d prepare a series of standards differing, for example, by 0.002 r cent of zinc. Dilute the standards with 0.01 N hydrochloric id to the same volume as the unknown. Then to each of the bes add 1 ml. of buffer solution of pH approximately 4.1 and 10 ml. of sodium thiosulfate solution. Run in 5.0 ml. of 0.001 r cent dithizone solution and shake vigorously for 1 to 1.5 inutes. Compare the tubes transversely against a white back-ound. Apply the correction for zinc in the reagents as deter-ined in a blank.

Determination of Lead. Transfer 5 ml. of the 0.01 N drochloric acid extract to a color-comparison tube, add 1 drop 10 per cent sodium citrate solution, 2 drops of concentrated mmonium hydroxide, and 1 ml. of 5 per cent potassium cyanide. repare a series of standards (containing for example 0.5, 0.75, . . . 2 γ of lead) in 5 ml. of 0.01 N hydrochloric acid, and treat ith citrate, ammonia, and cyanide. From a buret add 2.0 ml. of 0.001 per cent dithizone in carbon tetrachloride to the unknown and the standards. Shake the tubes vigorously for 10 to 15 seconds and compare the colors by viewing the carbon tetrachloride layers transversely against a white background. If desired, adjacent members of the standards may be mixed for a more precise comparison after the first comparison has been made. Correct the lead value obtained for the amount in the reagents.

Literature Cited

(1) Fischer, H., *Z. angew. Chem.*, 47, 685 (1934).
(2) *Ibid.*, 47, 691 (1934).
(3) Fischer, H., and Leopoldi, G., *Z. anal. Chem.*, 107, 241 (1937).
(4) Fischer, H., and Leopoldi, G., *Z. angew. Chem.*, 47, 90 (1934).
(5) Willoughby, C. E., Wilkins, E. S., Jr., and Kraemer, E. O., Ind. Eng. Chem., Anal. Ed., 7, 285 (1935).

Received July 16, 1937.

Influence of Solvent on the Saponification Number of Rosin

W. C. SMITH, Naval Stores Research Division, Bureau of Chemistry and Soils, U. S. Department of Agriculture, Washington, D. C.

SINCE about two-thirds of the rosin consumed industrially goes into the production of paper size and soap, these sers are especially interested in the determination of the -called saponification number of rosin as the means by hich they decide what quantity of alkali is needed to combine with rosin to convert it into a soap or a size. Because f the different results obtained on saponifying oils, fats, and axes with different solvents, as reported in the literature, is investigation was undertaken to ascertain what solvent r solvents should be used in determining the saponification umber of rosin.

Rosin is usually described as consisting of abietic acid, atural esters of abietic acid, and unsaponifiable materials. t is described in more detail (*8*) as consisting of about nine arts of isomeric resin acids having the empirical formula $_{20}H_{30}O_2$ and one part of neutral bodies consisting of esters, sqiuterpenes, oxidation products, and unidentified components. Earlier investigators (*5*) held conflicting opinions s to the presence of lactones and anhydrides.

Abietic and isomeric resin acids are monobasic. One gram f these acids will therefore require for neutralization alkali quivalent to 185.6 mg. of potassium hydroxide. Esters of ese acids will require for saponification smaller quantities f alkali, dependent on the molecular weight of the alcohol mbined with the acid.

It would appear that the sum of the acids in rosin, calcuted as abietic from the saponification number, and the unsaonifiable matter should not exceed 100 per cent, and if waterluble alcohols or light volatile matter were present such sum ould be less. The results obtained on a large number of mples of gum rosin by the proposed American Society for esting Materials methods (*1*) show that on the average, the alculated abietic acid plus the unsaponifiable matter totals little over 102 per cent and, in some instances, is as much as 05 per cent. FF wood rosin (*13*) is reported to contain 89 er cent acid as abietic, and 13 per cent unsaponifiable matter. latlack and Palkin (*7*) observed this apparent anomaly and ggested the presence of acids of lower molecular weight han abietic as an explanation. The presence of volatile ater-soluble acids in rosin has been reported previously. Tomeo and Garcia-Viana (*18*) found Spanish rosin to have a Reichert-Meissl number of about 1.5. Terpougoff (*17*) saponified 14.4 grams of WW rosin, and after 24 hours decomposed the soap with excess sulfuric acid. In the aqueous layer were found 0.228 gram of acetic acid and possibly traces of formic and butyric acids. This percentage of acetic acid in rosin would increase its saponification number by 11.9 and its apparent resin acid content by 6.4 per cent.

It does not necessarily follow from the high free-acid content of rosin and its ready solubility in aqueous and alcoholic alkalies that complete saponification of the esters present is easily effected. In fact, certain esters of abietic acid are very difficult to saponify. The manufacturers of methyl abietate state that ordinary saponification methods have little effect on this product. The standard method yields a saponification number of 11 on neutral methyl abietate.

Standard methods for determining the saponification numbers of oils, fats, and waxes, such as have been adopted by the Association of Official Agricultural Chemists and the American Society for Testing Materials, specify that 95 per cent ethyl alcohol be used for dissolving the sample and also for preparing the saponification solution. In order to conform as closely as possible to standard methods, 95 per cent ethyl alcohol was specified for use in determining the saponification number of rosin (*3*). Some industrial laboratories substitute for ethyl alcohol a tax-free denatured alcohol, such as specially denatured No. 30. Gardner (*4*) recommends the use of absolute methyl alcohol for preparing a saponifying solution for the resins on account of its better keeping qualities. Schamelhaut (*14*), without presenting any data, states that isopropyl alcohol can satisfactorily replace ethyl in determining the acid and saponification numbers of fats, essential oils, and balsams. The comparison of other solvents with ethyl alcohol in the saponification of oils, fats, waxes, and esters has been the subject of many investigations.

Pollmann (*12*) concluded that methyl alcohol cannot replace ethyl for saponification of esters because the reaction is incomplete after 0.5 hour's boiling. Leaper (*6*) found that a Carbitol or diethylene glycol monoethyl ether solution of potassium hydroxide would completely saponify oils, fats, and waxes in 1 hour, whereas

3 hours often were required when ethyl alcohol was used. Steet (*16*), using a Cellosolve or ethylene glycol monoethyl ether solution of potassium hydroxide, obtained the same results on saponifying pure fatty oils as were obtained when an ethyl alcohol solution was used. The time required for saponification was much shortened by using Cellosolve. Anderson and Brown (*2*) reported that castor oil is saponified more rapidly in amyl than in ethyl alcohol and more rapidly in ethyl than in methyl. Schuette and Davis (*15*) obtained slightly higher results with isopropyl than with ethyl alcohol in saponifying vegetable oils. Pardee and Reid (*11*) showed that, because of alcoholysis, in the saponification of esters of volatile acids, especially formic, there is a loss of ethyl formate when ethyl alcohol is used, but that when normal butyl alcohol is used theoretical results are obtained. Pardee, Hasche, and Reid (*10*) obtained higher saponification numbers on several oils, fats, and waxes in *n*-butyl alcohol than in ethyl. The greatest differences were found in linseed oil, tallow, and neat's-foot oil. The results reported for these in ethyl and *n*-butyl alcohol, respectively, are: linseed oil, 185.6 and 198.5; tallow, 183.7 and 198.3; neat's-foot oil, 111.5 and 131.7.

For the present investigation methyl, isopropyl, and *n*-butyl alcohols were selected for comparison with ethyl alcohol in the saponification of rosin because methyl alcohol has been recommended for use with resins and isopropyl for use with balsams and because isopropyl and *n*-butyl alcohols gave higher results than ethyl in saponifying oils, fats, and waxes. Specially denatured alcohol No. 30 was also used for comparison with ethyl because it is now being used by some industrial laboratories.

All samples used in the test were gum rosin varying in grade from X to D. With the exception of samples 18 and 19, which were prepared in the laboratory by the method of Palkin and Clark (*9*), all were considered to be normal rosin. No. 18 was unusually high in resene or unsaponifiable matter, and No. 19 unusually low in resene. The precautions recommended by Veitch and Sterling (*19*) were taken to prevent changes due to oxidation.

The alcohols used as solvents and for preparation of the 0.5 *N* saponification solutions were as follows:

Methyl, C. P. grade, almost absolute, used without any treatment.

Ethyl, 95.2 per cent after distillation from potassium hydroxide.

S. D. No. 30, prepared by adding one volume of methyl to 10 volumes of ethyl.

Isopropyl, commercial "Petrohol" refined as described by Schuette and Davis (*15*).

n-Butyl, technical grade refined as described by Pardee and Reid (*11*).

Two-gram portions of the sample were placed in 300-cc. Erlenmeyer flasks and 50 cc. of the selected solvent and 25 cc. of a corresponding saponification solution added. The flasks were then placed on a steam bath for 1 hour under air reflux. After cooling, the excess alkali was titrated with 0.5 *N* hydrochloric acid. Great care was taken in determining the end point. It was found necessary in some cases to reheat and cool and again neutralize the solution after the first end point had been reached, in order to dissolve the alkali which apparently had combined with the glass. The greatest difference between the first and final end points corresponded to 0.3 cc. of 0.5 *N* hydrochloric acid. The maximum difference in duplicate determinations was 1.4 units in saponification number. The average results on the individual samples are listed in Table I.

Table I. Saponification Numbers of Rosins in Various Alcohols

Sample No.	Methyl	Ethyl	S. D. No. 30	Isopropyl	*n*-Butyl
1	167.7	174.3	174.6	...	...
2	167.7 171.3[a]	174.8	173.9	...	...
3	165.0 167.3[a]	170.7	170.9	...	...
4	167.5	174.3	173.8	...	...
5	168.8 173.0[a]	173.7	173.9	...	...
6	..	172.3	173.0	...	...
7	..	175.1	175.4	...	...
8	..	170.9	170.9	...	...
9	..	168.7	169.5	...	...
10	..	173.7	172.6	...	...
11	..	175.4	175.4	...	...
12	170.9 173.2[a]	176.0	175.4	179.0	194.0
13	168.8	174.0	173.9	176.0	189.4
14	..	176.5	176.0	176.0	176.9
15	..	172.8	...	175.3	191.9
16	..	176.4	...	181.0	196.1
17	..	173.8	...	175.8	190.3
18	..	166.3	...	...	184.2
19	..	179.9	...	...	182.6

[a] 4 cc. of water added along with saponification solution.

Discussion of Results

The higher results obtained with *n*-butyl alcohol indicate that it in some way promotes the saponification of rosin components not saponified in the lower alcohols.

The average unsaponifiable matter of a large number of samples of commercial gum rosin was found to be about 8 per cent, with very few samples having less than 6 per cent. A saponification number of 175 would account for a total abietic or isomeric resin acid content of slightly more than 94 per cent. The average saponification number in butyl alcohol for the normal gum rosins was 189.8. This suggests the presence in the rosins of low molecular weight acids, esters of such acids, polybasic acids, or their esters.

In order to determine whether there was any loss of light volatile esters when ethyl alcohol was used, several samples were saponified in pressure flasks immersed in a steam bath. On all samples except No. 18 the saponification numbers obtained when the determination was carried out under pressure were essentially the same as obtained under air reflux. On this sample the pressure determination gave a value only 2.4 units higher than did the air reflux determination.

An attempt was made to recover from some of the samples having high saponification numbers in *n*-butyl alcohol sufficient volatile acids to account for the high values. A prolonged steam distillation of the rosin yielded but negligible quantities of volatile acids. The addition of a small quantity of sulfuric acid did not increase the yield of volatile acids. A 50-gram portion of the sample was then saponified in *n*-butyl alcohol solution with an excess of alkali, and after saponification as much as possible of the solvent was removed by distillation. A calculated small excess of sulfuric acid was then added and the mass was subjected to prolonged steam distillation. The greatest quantity of acid recovered by this means would represent about 7 units in the saponification number of the sample taken. When the saponification was made in aqueous alkali, similar results were obtained. Slightly smaller quantities of acid were recovered when ethyl alcohol was used. Acids of the abietic type, prepared from rosin by recrystallization, treated in this manner yielded only a trace of volatile acid.

Commercial methyl and ethyl abietates were used to test the relative effectiveness of ethyl and *n*-butyl alcohols in saponifying esters of abietic acid. The saponification numbers in ethyl and *n*-butyl alcohol, respectively, were for methyl abietate 18.2 and 37.8, and for ethyl abietate 11.2 and 19.6. All these values are far short of the theoretical.

Finally three samples of abietic-type acids, prepared as described above, were saponified in ethyl and *n*-butyl alcohol solutions. The average saponification number in each solvent was approximately 185. The acid number of the acids determined in ethyl alcohol was 184.

Summary and Conclusions

The saponification number of rosin is influenced by the solvent used in the determination, alcohols of the higher

ıolecular weights giving the higher values. This is in harıony with the findings of earlier investigators on the saponi.cation of oils, fats, and waxes.

Since known esters of abietic acid are not completely saponi.ed in *n*-butyl alcohol and it is generally assumed that rosin ontains esters of the resin acids, it is probable that rosin is ot completely saponified even in this medium, although the esults obtained are higher than with the other solvents tested.

Since the results obtained using specially denatured alcohol No. 30 are essentially the same as those obtained with 95 per ent ethyl, this denatured alcohol may be used in the place f the 95 per cent ethyl in the saponification of rosin as cusomarily carried on.

A method for the complete saponification of rosin will be f scientific value in determining its composition and nature. However, from a commercial standpoint it is not essential, ince industrial saponification of rosin is carried out in aqueous olutions of alkali. A method to be of maximum commercial alue should simulate the procedure used industrially.

Attempts by the writer to determine the saponification umber of rosin by saponifying in aqueous alkali have not met vith complete success. However, results obtained by this ıethod also indicate that saponification is not complete.

The presence in rosin of volatile water-soluble acids, reorted by others, has been confirmed. The quantities found, owever, are not sufficient to account for the high saponificaion numbers obtained on certain samples.

The presence in rosin of nonvolatile polybasic acids, or heir esters, such as are found in copals, would increase its aponification number.

Rosins having very low resene content appear to contain only isomeric resin acids of the abietic type. A study of the resene or neutral portion of rosin may reveal the cause of the high saponification numbers obtained with certain solvents.

Literature Cited

(1) Am. Soc. Testing Materials, *Proc.*, 33, 438 (1933).
(2) Anderson, A., and Brown, H. L., *J. Phys. Chem.*, 20, 195 (1916).
(3) Assoc. Official Agr. Chem., Official and Tentative Methods of Analysis, 4th ed., 75 (1935).
(4) Gardner, H. A., "Physical and Chemical Examination of Paints, Varnishes, Lacquers and Colors," p. 846, Washington, Institute of Paint and Varnish Research, 1935.
(5) Haller, Hans, doctorate dissertation, University of Bern, 1907.
(6) Leaper, J. M. F., *Textile Colorist*, 55, 601, 636 (1933).
(7) Matlack, M. B., and Palkin, S., *J. Assoc. Official Agr. Chem.*, 18, 466–71 (1935).
(8) Palkin, S., *J. Chem. Education*, 12, 35 (1935).
(9) Palkin, S., and Clark, C. K., Ind. Eng. Chem., 26, 720 (1934).
(10) Pardee, A. M., Hasche, R. L., and Reid, E. E., *Ibid.*, 12, 481 (1920).
(11) Pardee, A. M., and Reid, E. E., *Ibid.*, 12, 129 (1920).
(12) Pollmann, F., *Seifensieder-Ztg.*, 55, 375 (1928).
(13) Romaine, E. V., *Ptg. Ink Maker*, June, 1931.
(14) Schamelhaut, A., *J. pharm. Belg.*, 9, 401 (1927).
(15) Schuette, H. A., and Davis, L. E., *J. Am. Pharm. Assoc.*, 15, 166 (1926).
(16) Steet, W. R., *Analyst*, 61, 687 (1936).
(17) Terpougoff, J., *Bull. inst. pin*, No. 17, 103 (1931).
(18) Tomeo, M., and Garcia-Viana, J., *Inst. forestal investigaciones experiencias (Madrid) Bol.*, 4, 88 (1931).
(19) Veitch, F. P., and Sterling, W. F., Ind. Eng. Chem., 15, 576 (1923).

Received July 31, 1937.

Determination of Coumarin in Sweet Clover

A Comparison of the Steam-Distillation and Alcoholic-Extraction Methods

IRA J. DUNCAN AND R. B. DUSTMAN
West Virginia Agricultural Experiment Station, Morgantown, W. Va.

IN 1934 the authors (*3*) proposed a method for the quantitative determination of coumarin in plant material, based pon the removal of the coumarin by steam distillation and ubsequent titration with potassium permanganate acording to the method of Obermayer (*6*). In 1935 Clayton nd Larmour (*1*) published a tentative colorimetric method or the determination of coumarin and melilotic acid in Melilotus species, that consists in extracting the sweet clover ıaterial with 95 per cent alcohol and determining the couıarin and melilotic acid colorimetrically in aliquot portions f the extract. The color is produced when the extract is reated with sodium carbonate and heated, and a solution of iazotized *p*-nitroaniline is added. Color comparisons are ıade with standards prepared from pure coumarin in alcoholic xtracts of some noncoumarin-bearing plant, such as westrn rye grass or alfalfa. With colorless solutions the method vas regarded as quantitative, but only comparative results vere claimed when it was applied to alcoholic extracts of weet clover. In 1936 Stevenson and Clayton (*8*) reported esults obtained with sweet clover, using certain modificaions of the Clayton-Larmour method, and extracting with 0 per cent methyl alcohol instead of 95 per cent ethyl alohol.

Recently the steam-distillation method was applied to the emoval of coumarin from vanilla extracts (*4*), and it was ound that the colorimetric procedure of Clayton and Larmour could be used for determining the coumarin in the distillates with excellent results.

Because some of the results reported by Stevenson and Clayton were at variance with results obtained in this laboratory, it seemed desirable to make a comparison of the analytical procedures involved. While this work was in progress the authors' attention was drawn to a still more recent modification of the alcoholic-extraction method by Roberts (*7*), and this modification has been included in the comparison trials reported here.

Comparison of Colorimetric and Titration Methods

The colorimetric method of Clayton and Larmour, with slight modifications (*4*), gave quantitative results when applied to the clear sweet clover distillates obtained by the steam-distillation method. Table I shows that approximately identical results are obtained when coumarin is determined in aliquot portions of the same distillates by the colorimetric and permanganate titration methods.

The colorimetric method is superior to the titration method because less time is required and because small amounts of noncoumarin reducing substances present in the distillates do not interfere with the color produced. Treatment of the distillates with lead acetate can, therefore, be omitted. For

Table I. Comparison of Colorimetric and Titration Methods for Sweet Clover Distillates

Sample No.	Coumarin Content: Colorimetric method	Coumarin Content: Titration method
	%	%
1	1.19	1.17
2	1.28	1.29
3	1.07	1.10
4	1.52	1.59
5	1.33	1.34
6	1.72	1.73
7	0.31	0.32
8	0.22	0.24
9	0.35	0.35
10	0.36	0.36
Av.	0.94	0.95

Table II. Determination of Coumarin

(In green, in room temperature–dried, and in oven-dried sweet clover by extraction and by distillation with and without added pure coumarin)

	Extraction	Distillation
	%	%
Dried at room temperature		
Sweet clover alone	0.54	1.11
Dried at 66°		
Sweet clover alone	0.53	1.06
Sweet clover plus 0.4% of added coumarin	0.94	....
Recovery of added coumarin	103.0	....
Green		
Sweet clover alone	0.46	0.42
Sweet clover plus 0.28% of added coumarin	0.47	0.71
Recovery of added coumarin	None	103.1

these reasons the colorimetric method was used throughout the work reported in this paper.

Extraction and Steam-Distillation Methods

Preliminary trials, which were made to compare the extraction method of Stevenson and Clayton with the steam-distillation method, showed wide differences in the coumarin content of samples taken from the same sweet clover material. Additional trials were therefore made on carefully sampled green, room temperature–dried, and oven-dried sweet clover in an attempt to find an explanation for the differences. The samples were prepared as quickly as possible in the following manner:

A large quantity of second-year-growth white sweet clover was cut at the early bloom stage, the cut ends were placed in a vessel of water to prevent wilting, and the whole was carried to the laboratory. Samples of green material were then prepared in duplicate by cutting the stems into sections just below each leaf axis and collecting alternate sections for samples. Three such pairs of alternate-section samples were prepared, and after weighing, each sample was cut into thin sections with scissors. One sample from each pair was extracted and the remaining three were distilled.

At the same time a set of three additional pairs was prepared in a similar manner. To three samples 0.005 gram of pure coumarin was added, and to the other three 0.01 gram was added. The first three were extracted and the last three were distilled. Samples for moisture determination were prepared at the same time. The sweet clover plants remaining were divided into two large samples. One sample was placed before an electric fan and dried for 5 days at 27° to 31° C. (room temperature). The other sample was placed in a forced draft oven and dried for 8 hours at 66° C. Coumarin was then determined in the dried material by extraction and by distillation. Samples of the oven-dried material to which 0.004 gram of pure coumarin was added were also extracted.

The average values for these coumarin determinations, calculated to a dry-weight basis, are given in Table II. The most noticeable fact is the failure to recover added pure coumarin from green sweet clover samples by extraction. By distillation the added coumarin was recovered fairly well, but, because the samples had not been ground, the recovery was somewhat variable. The values for dry sweet clover show wide differences, the extraction method giving values approximately one-half those obtained by the distillation method. Since the coumarin in extracts and distillates was determined by the same colorimetric procedure, it appears that the extraction was incomplete or that some of the coumarin was present in a form not soluble in alcohol or was destroyed in the process of extraction. That the former was not the case was shown by failure to recover an appreciable amount of coumarin from the residues by further extraction and by steam distillation. In other trials extraction gave values which were considerably lower than those obtained by steam distillation. The added pure coumarin was completely removed from the dry sweet clover samples by extraction.

Table III. Extraction of Coumarin from Green Sweet Clover with and without Added Pure Coumarin

(Second trial)

Sample No.	Sweet Clover Alone	Sweet Clover + Added Coumarin	Recovery of Added Coumarin
	%	%	%
1	0.64	0.59	..
2	0.54	0.57	..
3	0.19	0.18	..
Av.	0.46	0.45	None

Recovery of added coumarin from green sweet clover by extraction was repeated on samples prepared as before. The added coumarin amounted to 0.0125 gram in each sample, which was approximately equal to that originally present in the samples as shown by the extraction procedure.

The results shown in Table III agree with those in Table II, in that the coumarin added to green samples is not accounted for when subjected to alcoholic extraction and subsequent colorimetric determination of coumarin in the extract. Just what happened to the added coumarin is not apparent. It did not remain in the samples following extraction, since further extraction of the residues gave only a very slight trace of color-producing substance when the extracts were treated with the diazotizing reagent. Likewise, steam distillation of some of the residues failed to recover any appreciable amount of coumarin. Other similar residues were washed with a little cold water to remove the adhering substances which had been extracted by the alcohol, 0.01 gram of pure coumarin was added to each residue, and the extraction procedure was repeated. The added coumarin was recovered quantitatively in each trial.

These results indicate that in the alcoholic extraction of green material something is removed which destroys, renders nonreactive, or interferes with the final color determination of the added coumarin.

In addition to errors resulting from extraction, considerable difficulty arose when the actual color comparisons were made. The sweet clover extract itself was somewhat colored, and the extracts of alfalfa and of other noncoumarin-bearing plants developed a decided reddish brown color when carried through the colorimetric procedure. When sodium carbonate was added to the sweet clover extract a pronounced yellow color was produced, and on heating, a cloudiness due to the precipitation of impurities resulted. Finally, because of off colors produced by impurities in both the standards and the unknowns, accurate color comparisons in a colorimeter were difficult if not impossible. For these reasons it appears that only approximate values may be obtained by the extraction method.

Repeated trials have shown that coumarin is removed quantitatively from sweet clover by the steam-distillation method. The distillates are clear and apparently contain no substances which interfere with the colorimetric estimation of the coumarin present.

ehavior of Melilotic and *o*-Coumaric Acids in the Distillation Process

Since coumarin and melilotic acid are thought to occur gether in sweet clover (*2*), and since *o*-coumaric acid also y be closely associated with coumarin in the plant, it med desirable to investigate the behavior of these sub- nces when subjected to the steam-distillation process. ther substance would interfere with the colorimetric de- mination of coumarin in the sweet clover distillates, since th react with the diazonium reagent and produce a red or similar to that given by coumarin. *o*-Coumaric acid s prepared by the method of Fittig and Ebert (*5*), and lilotic acid was prepared according to the method of Tie- n and Herzfeld (*9*). After several recrystallizations each s obtained in pure form. When a given weight of meli- ic or *o*-coumaric acid was treated with the diazonium solu- n, a color was produced similar to that given by coumarin d found to be 92.8 and 79.4 per cent as intense, respectively, that produced by an equal concentration of pure cou- rin.

In order to determine the extent to which melilotic acid d *o*-coumaric acid are carried over into the distillates, 025-gram samples of each in 100 ml. of distilled water were jected to four distillations by the steam-distillation pro- lure. The distillates from the *o*-coumaric acid gave no or test, showing that it is not volatile with steam under e conditions of the method. The melilotic acid distillates ve an average percentage recovery of 22.9, 17.7, 13.2, and for the first, second, third, and fourth distillations, re- ectively. Pure coumarin in solution was recovered quan- tatively by one distillation. Even though melilotic acid is tilled over appreciably from pure aqueous solution, when ded to 5-gram samples of alfalfa, only a very small amount to 3 per cent) was distilled over in four distillations. Dis- ates from the alfalfa samples alone gave negative color ts.

TABLE IV. DETERMINATION OF COUMARIN

(dry samples of sweet clover in the presence of sodium acetate with and without added melilotic acid and *o*-coumaric acid)

Sample No.	Substance Added	Coumarin
		%
1	None	0.72
2	None	0.72
3	None	0.68
4	None	0.70
5	None	0.70
		Av. 0.70
6	Melilotic acid, 0.025 gram	0.70
7	Melilotic acid, 0.025 gram	0.69
8	Melilotic acid, 0.025 gram	0.69
		Av. 0.69
9	Melilotic and *o*-coumaric acids, 0.025 gram of each	0.69
10	Melilotic and *o*-coumaric acids, 0.025 gram of each	0.68
		Av. 0.69

TABLE V. COMPARISON OF ROBERTS' MODIFICATION AND STEAM-DISTILLATION METHODS

Sample No.	Coumarin by Roberts' Modification	Coumarin by Steam Distillation[a]
	%	%
1	1.07	1.10
2	1.13	1.04
3	0.97	1.10
4	1.14	1.01
5	1.68	2.59
6	0.99	0.90
7	0.98	0.88
8	1.35	1.90
9	1.34	1.99
10	1.41	2.05
11	1.61	2.24
12	2.36	2.27
13	1.76	2.25
Av.	1.37	1.64

[a] Distillation samples also ground in mortar with sand.

In an effort to prevent entirely the transfer of melilotic acid without interference with the removal of coumarin, a series of trials was made in which 0.025-gram quantities of melilotic acid, or 0.025 gram each of melilotic acid and coumarin, were placed in the distillation flasks, 0.5 to 1 gram of a suitable salt and 100 ml. of distilled water were added, and the contents were distilled to dryness. The distillates were diluted to 250-ml. volumes and colorimetric determinations were made on 25-ml. aliquots. One-half gram of sodium acetate gave the desired result: The distillates from melilotic acid showed only a very slight trace of that substance present, while the distillates from the melilotic acid–coumarin mixture gave complete recovery of coumarin.

Similar trials on the removal of melilotic acid and coumarin from 5-gram samples of alfalfa by four distillations gave analogous results. The sodium acetate prevented the transfer of melilotic acid but did not hinder the passage of coumarin. Finally, trials were made on the distillation of sweet clover samples, with and without addition of melilotic and *o*-coumaric acids, to which 0.5 gram of sodium acetate was added. Five-gram samples were used and coumarin was determined in 20-ml. aliquots from 1000-ml. volumes after four distillations. The results of these trials are given in Table IV. Samples 1 and 2 were each subjected to a fifth and sixth distillation without increasing the quantity of coumarin found.

It was concluded that the addition of 0.5 gram of sodium acetate to the sweet clover samples in the distillation flasks would prevent melilotic acid or *o*-coumaric acid from interfering with the coumarin determination. Four distillations are required to remove the coumarin completely.

Comparison of Roberts' Modified Extraction Method with Steam Distillation

Recently Roberts modified the extraction procedure of Stevenson and Clayton by grinding the green leaves in a mortar with sand and extracting the coumarin with 50 per cent methyl alcohol, at room temperature, while shaking for 30 minutes. Coumarin was determined in aliquot portions by comparing with standards containing pure coumarin to which an extract of alfalfa leaves was added. Comparison of this method with the steam-distillation method was made on samples of sweet clover leaves.

Table V shows considerable differences in the coumarin content as determined by the two methods. Why these differences were obtained is not apparent. Roberts' modification is a decided improvement over the original extraction method—for example, pure coumarin added to green sweet clover samples was recovered quantitatively in numerous trials. Determinations of coumarin on green material without previously grinding with sand were both low and variable. Determinations made on samples similar to Nos. 1, 2, and 3 by the distillation method without grinding gave an average value of less than half (0.38 per cent) of that reported in Table V for these samples, showing that with green material grinding is essential for accurate quantitative determinations.

After the coumarin is separated by extraction from the sweet clover samples, the same difficulty prevails with color comparisons as for the original method. Moreover, the extraction of any melilotic acid, *o*-coumaric acid, or other substance which would react with the color reagent interferes with the coumarin determination. A large number of sweet clover samples, from which the coumarin was removed completely by distillation, were extracted by Roberts' modification and the amount of color-producing substance present in the extracts was determined. These values ranged from a very slight trace to 0.32 per cent calculated as coumarin.

TABLE VI. DETERMINATION OF COUMARIN

(Percentage of total coumarin removed from dry sweet clover material by one distillation, estimated total coumarin content on the basis of one distillation, and deviation of the estimated value from the true value for 5- and 2-gram samples)

	Five-Gram Samples			Two-Gram Samples		
	Removed	Estimated total	Deviation	Removed	Estimated total	Deviation
	%	%	%	%	%	%
	57.3	102.0	2.0	77.2	103.0	3.0
	56.4	100.3	0.3	74.9	99.8	0.2
	57.5	102.3	2.3	75.8	101.2	1.2
	54.8	97.5	2.5	72.3	96.5	3.5
	59.0	105.0	5.0	76.5	102.1	2.1
	54.0	96.1	3.9	77.3	103.2	3.2
	55.0	97.9	2.1	77.9	104.0	4.0
	57.7	102.7	2.7	72.7	97.1	2.9
	57.1	101.6	1.6	72.1	96.3	3.7
	53.9	95.9	4.1	74.7	99.7	0.3
	57.1	101.6	1.6	71.9	96.0	4.0
	57.1	101.6	1.6	76.0	101.5	1.5
	54.1	96.3	3.7	74.6	99.6	0.4
	55.0	97.9	2.1	..	...	...
	56.5	100.6	0.6	..	...	...
	54.6	97.2	2.2	..	...	...
	53.8	95.7	4.3	..	...	...
	57.6	102.5	2.5	..	...	...
	59.0	105.0	5.0	..	...	...
	56.8	101.0	1.0	..	...	...
Av.	56.2		2.6	74.9		2.3

This would lead one to expect slightly higher values, on the average, by Roberts' method than by steam distillation, whereas Table V shows the opposite result.

To obtain more information as to the specific nature of the color produced by pure coumarin, sweet clover distillates, melilotic acid, *o*-coumaric acid, sweet clover extracts, and alfalfa extracts plus added coumarin when each is treated with the diazonium solution, the percentage of transmittance of light of various wave lengths by these solutions over the range at which light is transmitted (560 to 700 millimicrons) was measured with a Keuffel and Esser spectrophotometer. These measurements showed that solutions containing pure coumarin, melilotic acid, *o*-coumaric acid, and sweet clover distillates gave nearly identical transmittance curves for solutions of equal color intensity. However, when the spectrophotometric curves produced by alcoholic extracts of sweet clover were compared with those produced by alcoholic extracts of alfalfa plus pure coumarin, considerable differences in transmittance were noted in the orange and red parts of the spectrum. The transmittance values for alfalfa extract plus pure coumarin fell below those for sweet clover extract in this region. This may account for the difficulty in matching the two solutions in a colorimeter and may cause some error in the estimation of the coumarin content. Sweet clover distillates are not subject to this difficulty when compared with standards of pure coumarin.

Short Method for Comparative Purposes

Numerous trials have shown that under the conditions described four distillations will remove all the coumarin from 5-gram samples of dry sweet clover material. If the sample is reduced, the number of distillations necessary to remove the coumarin completely is also reduced. Trials were made to determine how constant the percentage removal is by one distillation from 5-gram and from 2-gram samples. Total coumarin was determined in samples chosen from six different stock materials, one of which was a sample of leaves, ranging from 0.43 to 1.31 per cent. Two to six samples from each stock material were distilled once and the coumarin present in the distillates was determined. The average percentage removal of coumarin from the 5-gram and 2-gram samples was found to be 56.2 and 74.9, respectively.

The factors for converting these average values to 100 per cent are 1.779 and 1.336, respectively. Applying the appropriate factor to the percentage of total coumarin removed from each sample by one distillation gives as a product th estimated total coumarin content. Comparison of the va ues thus found with 100 per cent gives the deviation fro the true value as determined by four distillations. The r sults of these determinations and calculations are summarize in Table VI, and show that the approximate coumarin co tent of sweet clover samples may be found by one distill tion. If other sample weights are employed, a suitable fa tor for each must be determined. When permissible, th shortening of the distillation procedure speeds up the metho and is sufficiently accurate for sorting sweet clover strain

Summary

A comparison of the alcoholic-extraction and steam-di tillation methods for removing coumarin from sweet clove samples showed considerable differences in the coumarin co tent as determined by the two methods. The Stevenso and Clayton method of extraction failed to recover pu coumarin added to green sweet clover, and when dry sample were extracted values of less than half those given by th distillation method were obtained. Roberts' modification c the extraction method showed a decided improvement, bu likewise gave lower values in most cases than did the disti lation method.

Spectrophotometric curves obtained from sweet clove extract did not agree closely with those obtained from alfalf extract plus pure coumarin in the orange and red regio This probably accounts for the difficulty encountered whe these solutions were compared in a colorimeter, but this di ficulty was not experienced when the sweet clover distillate were compared with pure coumarin standards.

Pure melilotic acid added to alfalfa samples and distille gave 2 to 3 per cent recovery in four distillations. The ad dition of sodium acetate to the sample in the distillatio flask prevented melilotic acid from distilling over, but did no reduce the rate of coumarin distillation. *o*-Coumaric aci was not volatile under the conditions of distillation.

Green samples should be ground with sand prior to dis tillation.

For approximation purposes, where a high degree of ac curacy is not necessary, the steam-distillation method ma be shortened considerably. Whereas four distillations ar required to remove the coumarin completely from the swee clover samples, one distillation removed, on the average 56.2 per cent of the coumarin from 5-gram samples and 74.9 per cent from 2-gram samples. Multiplied by suitable fac tors, these values can be converted to fairly satisfactory es timates of the total coumarin content. In a number o trials this method showed an average deviation of 2.6 pe cent for 5-gram samples and 2.3 per cent for 2-gram samples Where more accurate results are desired the longer procedur should be used.

Literature Cited

(1) Clayton, J. S., and Larmour, R. K., *Can. J. Research*, **13**, C, 89-100 (1935).
(2) Czapek, Friedrich, "Biochemie der Pflanzen," Vol. 3, p. 471, Jena, Gustav Fischer, 1922.
(3) Duncan, I. J., and Dustman, R. B., IND. ENG. CHEM., Anal. Ed., **6**, 210–13 (1934).
(4) *Ibid.*, **9**, 416 (1937).
(5) Fittig, R., and Ebert, G., *Ann.*, **226**, 351–4 (1884).
(6) Obermayer, E., *Z. anal. Chem.*, **52**, 172–91 (1913).
(7) Roberts, W. L., unpublished method, Dept. Agr. Chem., University of Wisconsin.
(8) Stevenson, T. M., and Clayton, J. S., *Can. J. Research*, **14**, C, 153–65 (1936).
(9) Tieman, Ferd., and Herzfeld, H., *Ber.*, **10**, 286–8 (1877).

RECEIVED July 6, 1937. Published with the approval of the Director of the West Virginia Agricultural Experiment Station as Scientific Paper 190.

Determination of Osmium in a Lead Assay Button

J. J. RUSSELL, F. E. BEAMISH, AND J. SEATH, University of Toronto, Toronto, Ontario, Canada

A method has been devised for the determination of osmium in a lead button. The influence of each of the platinum metals, silver, and gold on the collection of osmium by fire assay is described. Evidence is submitted to show that certain native platinums, after fire-assaying and subsequent cupellation to a small lead button, will yield osmium directly from the nitric acid parting solution.

N SO FAR as the authors are aware, no procedure for the quantitative determination of osmium in a lead regulus s ever been recorded in the scientific literature. This lack a recipe may result from two conceptions: (1) that osmium curs only as the mineral iridosmine (osmiridium), which is nerally given the somewhat vague definition of a solid lution of the platinum metals with predominant proportions osmium and iridium; (2) that, during the process of fire say with lead as collector, the original osmium alloy passes to the lead button as a mechanically mixed constituent.

In connection with statement 1, the authors have found at samples of an Abyssinian native platinum would give traces of osmium by direct ignition in air, but on fire assay th lead and silver and subsequent cupellation no osmium atever could be distilled from the nitric acid parting solution. Beamish and Russell (*1*) have shown that if a platinum metals–lead button has been salted with osmium, all is metal is not given off when the resulting bead is parted, t that an appreciable proportion of it will appear after the al residue is fused with sodium peroxide and the fused mass eated with nitric acid. And so it may be true that even ore osmium might be evolved from the parting acid in the ses stated in this report, were it not for the restraining effect of certain other platinum metals brought on by the fire eatment with lead.

Concerning statement 2, apparently no suggestion has been corded of the possibility that some of the natural alloys of atinum, in which osmium is present, may give off this metal a result of fire treatment with lead and subsequent parting th nitric acid.

The following is a report of a successful attempt to devise method for the determination of total osmium in a lead tton. In all cases of fire assay the temperature of the rnace pot was 1200° ± 50° C. The cupellation temperature all cases was 950° ± 25° C.

Determination in Nitric Acid Solutions

Ammonium bromosmate was prepared and analyzed by rning under hydrogen. Samples of 33.89 and 28.31 mg. re found to contain 27.00 and 27.01 per cent of osmium, e calculated percentage being 27.01.

The first method employed for osmium determination was ric acid distillation into sulfur dioxide–hydrochloric acid ution.

Because small amounts of osmium were to be determined, it s decided to reduce the distilling apparatus to about one-tenth e size of that described by Gilchrist (*2*). The first connecting be was lengthened, however, to avoid collection of too much ric acid in the distillate.

A sample weighing 22.30 mg. of the pure ammonium bromosmate (6.024 mg. of osmium) was dissolved in 15 cc. of water and 7 cc. of 6 *N* nitric acid were added. The first collection flask contained 15 cc., the second and third 10 cc., of hydrochloric acid freshly saturated with sulfur dioxide. Air was passed through the solution at a rate just sufficient to prevent bumping. The osmium solution was boiled for 40 minutes, after which time no osmium remained in the distilling liquid. The total volume of 35 cc. of sulfur dioxide absorbing solution was evaporated over steam. With the addition of hydrochloric acid to decompose sulfites, the thick dark-brown sirup became yellow and yielded 3.454 mg. of osmium. These facts are significant because Gilchrist (*2*) was successful in collecting weights of osmium twenty times as large, in volumes of sulfur dioxide–acid solution ten times as great as those used by the authors.

An unsuccessful attempt was made to determine osmium which had been distilled into 10 per cent sodium hydroxide solution.

The authors then decided to distill the milligram samples of osmium into large volumes of absorbing solution. The first receiving flask contained 150 cc. of this solution, the second and third 50 cc. each. The apparatus used was a standard distilling equipment sold by the Scientific Glass Apparatus Co., Bloomfield, N. J.

Samples of 0.513 and 23.38 mg. of ammonium bromosmate were treated with nitric acid and distilled. The osmium was determined according to the procedure described below, which is identical with that used for all osmium determinations recorded in this report.

The 250 cc. of sulfur dioxide–acid solutions were evaporated over steam to a sirup. The sulfites were removed by three additions of 12 *N* hydrochloric acid solution. The liquid was then diluted to 75 cc. with water and filtered by means of a filtering crucible. The 125 cc. of liquid were brought to pH 4 by means of a filtered 10 per cent sodium bicarbonate solution with bromophenol as indicator and boiled to precipitate and coagulate the black osmium dioxide. The precipitate was filtered through an A2 grade filtering crucible and washed with 100 cc. of a 1 per cent aqueous solution of ammonium chloride. Then about 50 mg. of wet solid ammonium chloride were added to prevent decrepitation. The ammonium chloride was slowly removed in an atmosphere of hydrogen and heating was continued in this atmosphere for 20 minutes. The crucible was cooled for 20 minutes in carbon dioxide and the residue weighed as metal. The results obtained were 0.14 and 6.37 mg. of osmium, respectively. By calculation the osmium content is 0.14 and 6.32 mg.

Determination in Partly Cupeled Lead Buttons

As mentioned above, there was a loss of osmium when Abyssinian native platinum was fire-assayed and subsequently cupeled to the silver bead. Samples of this material were assayed in the regular manner. Cupellation was stopped when the lead buttons weighed between 1 and 2 grams. The lead regulus was placed in the distilling flask, treated with 6 *N* nitric acid solution, and the distillate was collected in 250 cc. of sulfur dioxide–acid solution. This solution yielded a very considerable quantity of osmium.

It was then decided to determine the efficiency of lead as a collector in the fire assay for osmium. Blank ores were salted with spectroscopically pure osmium and ammonium bromosmate, then fluxed and cupeled to smaller buttons. The osmium content was determined as above described and the results obtained are given in Table I.

In each case the residue, if any, remaining in the distilling flask was filtered out by means of a porous-bottomed filtering crucible. The crucible was then placed in a silica tube 2.5 cm. (1 inch) in diameter, the end of which was drawn down to a narrow outlet immersed in 3 to 4 cc. of a 10 per cent sodium hydroxide solution. Oxygen was passed through the heated tube and any

TABLE I. DETERMINATION OF OSMIUM

Ammonium Bromosmate Added	Osmium in Bromosmate	Osmium Metal Added	Initial Weight of Button	Final Weight of Button	Osmium Recovered	Error
Mg.	*Mg.*	*Mg.*	*Grams*	*Grams*	*Mg.*	*Mg.*
1.394	0.377		24.6	2.5	0.379	+ 0.002
2.348	0.634		25.1	0.8	0.648	+ 0.014
10.22	2.760		24.5	0.6	2.683	− 0.077
98.12	26.50		23.9	2.6	24.08	− 2.42
146.6	39.59		24.6	2.6	29.17	−10.42
225.0	60.77		23.8	2.5	53.94	− 6.83
		0.397	23.5	2.4	0.399	+ 0.002
		5.534	24.0	2.6	5.559	+ 0.025
		29.75	24.0	3.4	20.83	− 8.92

osmium tetroxide formed was collected in the caustic solution which was then transferred to the distilling flask. The residue remaining after the oxidation was scraped out into a silver crucible, 3 grams of sodium peroxide were added, the mixture was melted, and the flux was maintained at a dull red heat for 10 minutes. The fused mass was then washed into the distilling flask along with the above caustic solution, treated with nitric acid, and any osmium tetroxide present was distilled into the original absorbing solution. The results in Table I indicate considerable loss of osmium when 25 mg. of metal were added to the flux.

Determination in Large Buttons

A 28.5-gram button was obtained from flux salted with 101.2 mg. of ammonium bromosmate (27.33 mg. of osmium). This button was treated directly as above described, except that instead of the usual 20 cc. of 6 *N* nitric acid solution, 70 cc. were required to dissolve the lead. When the evaporated sirup was treated with 12 *N* hydrochloric acid the deep brown color became a light yellow, indicating possible loss of osmium. The osmium recovered weighed 18.96 mg.

A second sample was salted with 198.2 mg. of ammonium bromosmate containing 53.53 mg. of osmium. The lead in this case was allowed to cool in contact with the slag and the button weighing 28.5 grams was removed by breaking the pot. The absorbing solution was treated as above described and the osmium recovered weighed 32.46 mg.

A 30-gram button salted with 55.14 mg. of osmium was placed in the distilling flask and treated directly with 70 cc. of nitric acid and the evaporated absorbing solution was returned to the distilling flask. When 10 cc. of 12 *N* hydrochloric acid were added and the solution was warmed, osmium tetroxide was distilled into the absorbing solution. The osmium recovered weighed 20.99 mg. These results prove, that under the conditions described above, osmium is lost during the evaporation.

A third sample was salted with 4.917 mg. of osmium. The lead button weighing 25 grams was treated directly with nitric acid and the total osmium recovered weighed 2.424 mg. Therefore, a large button must be reduced in size, as indicated in Table I, before treatment to recover the osmium.

Fusion of Osmium with Sodium Peroxide

In order to determine whether any osmium was lost during the process of sodium peroxide fusion, 4.926 mg. of osmium were placed on the bottom of the silver crucible and covered with 3 grams of sodium peroxide. The peroxide was slowly melted and then maintained at a dull red heat for 10 minutes. The cooled melt was washed into the distilling flask and the tetroxide distilled into 6 *N* hydrochloric acid saturated with sulfur dioxide. The osmium recovered weighed 4.734 mg. A second sample of 0.321 mg. similarly treated yielded 0.325 mg. of osmium.

Determination of Total Osmium in Beads Containing Platinum Metals

A sample of blank ore and a suitable flux were salted with 16.77 mg. of ammonium bromosmate (4.531 mg. of osmium), 83 mg. of platinum, 0.8 mg. of iridium, 0.8 mg. of rhodium, 0.5 mg. of palladium, and 0.5 mg. of gold. The lead button of 25 grams was cupeled to about 3 grams. On distillation the lead nitrate solution yielded 1.402 mg. of osmium. The residue was fused with sodium peroxide as described above and yielded 3.061 mg. of osmium—a total osmium recovery of 4.463 mg. and a loss of 0.068 mg.

A second sample, prepared as described above, contained 17.69 mg. of ammonium bromosmate (4.781 mg. of osmium), 57.5 mg. of palladium, 17.5 mg. of gold, 4.3 mg. of iridium, 4.5 mg. of rhodium, and 4.2 mg. of ruthenium. The button was cupeled to about 3 grams. The osmium recovered from the parting aci weighed 0.230 mg., and the peroxide fusion yielded 4.464 mg.- a total recovery of 4.694 mg. and a loss of 0.087 mg.

Retention of Osmium by Silver, Gold, and the Remaining Platinum Metals

It has been shown by Beamish and Russell (*1*) that lea buttons containing platinum metals and silver, salted wit osmium, produce silver beads which on parting do not yiel all of their osmium content, and that much of this metal i retained until treatment of the final fusion.

The experiments described above also indicate that certair if not all of the platinum metals and perhaps silver and gold somehow protect the osmium from attack by nitric acid. I was decided to determine which of the metals exerted thi pronounced effect.

SILVER-OSMIUM. The button seemed to cupel in a norm manner until practically all the lead was removed. At the finis ing temperature the silver bead broke into a fine spray of metall globules and rapidly decreased in size. A lead button containin 500 mg. of silver and 25 mg. of osmium was cupeled and th cupel removed 30 seconds after the blick. The bead then weighe 175 mg. and the cupel, examined under the microscope, wa found to be covered with innumerable silvery globules. Th bead was placed in the distilling flask and dissolved in nitri acid. The solution was boiled and the distillate collected i 3 cc. of 10 per cent sodium hydroxide solution. There was n residue in the flask and no osmium could be found in the causti solution by treatment with thiourea, which is sensitive to 0.0 mg. of osmium per cc. A number of buttons prepared in th manner produced identical results.

SILVER-GOLD-OSMIUM. A 30-gram lead button was mad up to contain 360 mg. of silver, 10 mg. of osmium, and 20 m of gold. The button was cupeled and the bead removed 3 seconds after the blick and weighed 181 mg. At the finishin temperature the bead gave off a spray of metal, but this effect wa not so pronounced as with the silver-osmium beads.

SILVER-PLATINUM-OSMIUM. A 30-gram lead button contair ing 360 mg. of silver, 10 mg. of osmium, and 20 mg. of plat num when treated as described above yielded a bead weighin 9 mg. The cupel depression was completely covered with m nute globules of metal.

SILVER-PALLADIUM-OSMIUM. A 30-gram lead button cor taining 360 mg. of silver, 10 mg. of osmium, and 20 mg. of pall dium, treated exactly as described for silver-gold-osmium yielded a bead weighing 183 mg. The cupel was thickly covere with minute beads.

SILVER-RUTHENIUM-OSMIUM. A 30-gram lead button cor taining 360 mg. of silver, 10 mg. of osmium, and 20 mg. of ruth nium produced a bead which was coherent, black in color, an did not blick. The bead was somewhat flattened.

SILVER-IRIDIUM-OSMIUM. A 30-gram lead button contair ing 360 mg. of silver, 10 mg. of osmium, and 20 mg. of iridiu cupeled to a residue which was spread out in a flat irregular blac mass.

SILVER-RHODIUM-OSMIUM. A 30-gram lead button contair ing 360 mg. of silver, 10 mg. of osmium, and 20 mg. of rhodiu produced a bead which was coherent, somewhat round, with rough black surface. It was characterized by a deep indentatio and there was a rather indefinite blick.

The quantitative results obtained from the above experi ments are given in Table II.

In the cases of 8, 9, 10, 11, and 12 the distillate was collecte in 3 cc. of a 10 per cent sodium hydroxide solution. A dro of this solution was put on a spot plate and a drop of hydro chloric acid saturated with sulfur dioxide added. Thi gave no pink color on standing when a drop of 9 per cen aqueous solution of thiourea was added, indicating absenc of osmium.

Assay of Native Platinum

A lead button obtained from a blank ore and flux, salte with 263.5 mg. of Abyssinian native platinum and 3 gram of silver, cupeled to the silver bead, yielded no osmium what ever in the distillate from the nitric acid parting solution

A second sample, salted with 256.6 mg. of this native plati num and containing no silver, was reduced in weight b

TABLE II. RETENTION OF OSMIUM

No.	Osmium	Ruthenium	Rhodium	Iridium	Silver	Initial Weight of Button	Osmium Recovered	Loss of Osmium
	Mg.	*Mg.*	*Mg.*	*Mg.*	*Mg.*	*Grams*	*Mg.*	*Mg.*
1	6.178	..	5.445	..	150	24	1.310	4.868
2	6.155	..	26.53	..	450	24	0.666	5.489
3	27.56	..	5.569	..	450	24	0.300	27.26
4	5.513	6.113	..	..	150	25	0.950	4.563
5	5.311	26.13	..	..	450	25	0.246	5.065
6	6.318	..	..	26.27	450	24	1.293	5.025
7	26.33	..	..	5.146	450	25	2.487	23.84
		Platinum	Palladium	Gold				
8	25.0	..	..	..	500	25	None	
9	10.0	..	..	..	20	25	None	
10	10.0	20.0	..	..	360	25	None	
11	10.0	..	20.0	..	360	25	None	
12	10.0	..	..	20.0	360	25	None	

cupellation to a 3-gram lead button, and 0.629 mg. of osmium was distilled from the parting acid.

A 150.0-mg. sample of British Columbian native platinum, after fire assay and subsequent reduction of the lead button to about 3 grams, produced 0.325 mg. of osmium by distillation from the nitric acid parting solution.

Summary

Osmium is not collected in a fire-assay bead by silver, silver-platinum, silver-palladium, or silver-gold.

The presence of ruthenium, iridium, or rhodium in a silver bead causes the retention of small amounts of osmium.

Collection by lead may be used for the quantitative determination of osmium, provided the weight of sample to be analyzed is adjusted to contain about 5 mg. or less of osmium.

Sulfur dioxide–hydrochloric acid solution is not a good reagent for the collection of osmium for large lead buttons.

Small amounts of osmium can be fused in sodium peroxide and the fused mass heated with nitric acid and distilled without loss of the metal.

Osmium can be distilled from the nitric acid solution which was used to part lead buttons obtained by fire assay of certain native platinums.

Literature Cited

(1) Beamish, F. E., and Russell, J. J., IND. ENG. CHEM., Anal. Ed., 8, 141 (1936).
(2) Gilchrist, R., *Bur. Standards J. Research*, 6, 421 (1931).

RECEIVED June 29, 1937.

Determination of Mercurous Chloride and Total Mercury in Mercury Ores

JOSEPH J. FAHEY, Geological Survey, Washington, D. C.

IN THE analysis of mercury-bearing rocks and mercury ores, the determination of total mercury is usually all that is required. This can be done by any of several well-known methods, in one of which (*2*) the mercury is vaporized by heating the fluxed sample and amalgamated with a previously weighed gold plate or foil.

In a few places, especially in Texas, calomel and oxychlorides of mercury are found associated with mercury ore. No method for the quantitative determination of calomel in rocks was found in the literature. The procedure described here combines a modified form of the Eschka method (*2*) for total mercury with one that permits a quantitative measurement of calomel associated with the mercury ore. This is done by fixing the chlorine of the sublimed mercurous chloride as sodium chloride, determining it with silver nitrate, and computing the percentage of the calomel. The reaction may be represented by the following composite equation:

$$4HgCl + 2Na_2CO_3 \xrightarrow{650^\circ\ C.} 4NaCl + 4Hg + 2CO_2 + O_2$$

The mercurous chloride is sublimed in a current of air and decomposed by a layer of hot sodium carbonate. The mercury passes over it and is collected as amalgam on a gold coil; the chlorine is retained by the sodium carbonate. Any sulfur present as cinnabar is oxidized and does not interfere with the other determinations.

Procedure

The material to be analyzed is ground to pass a 60-mesh sieve and air-dried, and a sample is weighed, the quantity depending on the apparent richness of the ore. A Pyrex tube open at both ends and about 50 cm. long, having an inside diameter of approximately 0.8 cm., is charged first with the sample and then with dry granulated sodium carbonate sufficient to fill about 2.5 cm. of the tube, the two being separated by a wad of asbestos and each terminated by a similar asbestos plug. The sample and the sodium carbonate do not touch each other.

A tightly rolled gold sheet 6 or 7 cm. long is inserted into the end of the tube next to the sodium carbonate. The diameter of this roll is such that it will just go in without binding. The other end of the tube is connected to an air line, and air, dried by sulfuric acid, is passed first through the sample, then through the sodium carbonate, and finally over the gold coil.

The tube is placed in a horizontal electric furnace 15 to 25 cm. long in such a way that the end containing the gold protrudes about 15 cm. The temperature at the position of the sample in the furnace is determined by a thermocouple placed at that point against the outside of the tube.

Air is passed through the tube at the rate of 4 to 6 bubbles per second, noted in the sulfuric acid drying flask, and the temperature in the furnace is raised to 650° C. and held constant for 5 minutes. The total time required for heating is from 30 to 45 minutes.

The mercury minerals volatilize and passing into the sodium carbonate are broken down and the mercury condenses on the cool wall of the tube outside the furnace. By means of a gently applied Bunsen flame the mercury is forced along the tube and amalgamates with the gold coil. An intermediate product, mercuric oxide (*1*), which forms as a red coating on the grains of sodium carbonate and decomposes to mercury and oxygen at 630° C., makes it necessary to raise the temperature to a point above this figure. Dry air is allowed to continue passing through the tube until any moisture that has condensed on the gold coil, resulting from the heating of the ore, is swept out of the system.

After cooling, the gold coil containing the mercury is removed from the tube and weighed. It is then heated under a hood, at first gently and finally by the full heat of the Bunsen flame, to drive off the mercury, allowed to cool, and weighed again. The difference between these two weights represents the total mercury content of the sample. The weight of the gold coil before

Table I. Determination of Mercurous Chloride and Mercury

HgCl Taken	HgCl Found	Error	Hg Equivalent of HgCl Taken	Hg Found	Error
Mg.	*Mg.*	*Mg.*	*Mg.*	*Mg.*	*Mg.*
50.0	49.6	−0.4	42.5	42.3	−0.2
10.0	9.7	−0.3	8.5	8.3	−0.2
1.0	1.2	+0.2	0.8	0.8	0.0

Table II. Analyses of Mercury Ores

Location	Total Hg	HgCl
	%	%
Terlingua, Tex.	60.28	0.21
	0.20	0.02
Pike County, Ark.	11.13	0.13
	0.90	None
	1.83	None
	0.14	0.03

it was inserted into the tube serves as a check on the final figure obtained after expulsion of the mercury.

The tube when cool is broken at the asbestos wad between the sample and the sodium carbonate. The latter is transferred to a 250-ml. beaker, put in solution in about 50 ml. of water, and made acid to litmus with nitric acid. After filtering to remove any asbestos, the chlorine is precipitated with silver nitrate and the resulting silver chloride is filtered and weighed. The quantity of mercurous chloride in the sample is computed from this figure. If the silver chloride precipitate is very small it may be necessary to arrive at its estimation by the nephelometer. The need of a blank correction for chlorine in the sodium carbonate depends on the purity of the reagent used.

The method gives excellent results on samples containing up to 50 mg. of mercurous chloride. None of the minerals found in mercury ores, including halite and sylvite, interferes with the determination. The rare mercury minerals, ter linguaite and eglestonite, if present, would yield chlorine an be reported along with calomel as mercurous chloride.

Table I contains results of analyses of samples of pur mercurous chloride.

Table II is made up of analytical data on mercury-bearin rocks from Terlingua, Tex., and Pike County, Ark. Th samples are not representative of ore bodies at these localitie The quantity of calomel found in these particular sample was small and was not visible under a hand lens. Calome has been reported from Terlingua, however, in crystals up t 1 cm. in length, and is generally present in the earthy matri of veins carrying the rarer mercury minerals (*3*).

Summary

A method for the determination of mercurous chloride an total mercury on the same sample is described.

The mercury minerals are volatilized in a glass tube an brought into intimate contact with granulated sodium car bonate. The chlorine is fixed as sodium chloride, determine with silver nitrate, and computed to mercurous chloride. Th mercury is collected on a previously weighed gold coil an weighed.

Literature Cited

(1) Echols, W. H., *Chem. News*, **44**, 189 (1881).
(2) Eschka, *Z. anal. Chem.*, **11**, 344 (1872).
(3) Hillebrand, W. F., and Schaller, W. T., U. S. Geol. Survey, *Bull* **405**, 9, 159 (1909).

Received June 8, 1937. Published by permission of the Director, U. S Geological Survey.

A Simple Fume Absorber for Kjeldahl Digestions

HAROLD G. CASSIDY, Oberlin College, Oberlin, Ohio

In the Kjeldahl digestion the unpleasant and corrosive fumes which are evolved, sometimes in copious amounts, are a source of inconvenience. Many devices for disposing of them have been developed. A common practice is to carry out the digestion in a hood, or to insert the neck of the digestion flask in a pipe leading either to an exhaust fan or to a water pump. Henwood and Garey (*2*) have described a flanged, porous alundum tube, closed at the bottom, which prevents the escape of the sulfuric acid mist yet allows the free exit of steam, sulfur dioxide, and carbon dioxide formed in the process of digestion. This tube is fastened in the open end of the digestion flask (*1*). Under these conditions the digestion may be performed on the laboratory table.

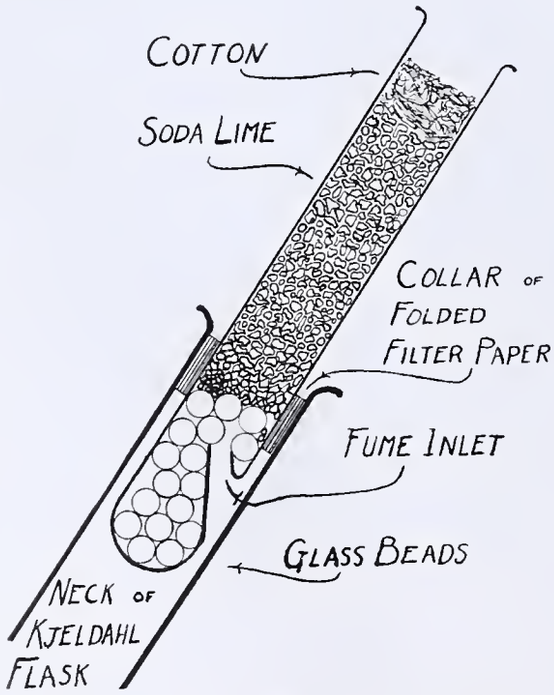

Figure 1. Fume Absorber in Position in Neck of Kjeldahl Flask

The device described below is simple and inexpensive, can be made from materials found in the laboratory, and is useful where ordinary types of fume-disposal equipment are not available. It absorbs, completely in most cases, both sulfur dioxide and the sulfuric acid mist. The absorption tube is the most satisfactory of many which have been designed, made, and tested. It may be modified for use in other reactions which give off noxious gases—for example, organic reactions in which hydrogen chloride is evolved.

The Absorption Tube

A test tube (preferably, though not necessarily, of Pyrex) is chosen of the largest size which easily slips into the neck of the Kjeldahl flask to be used. The tube is heated at a point somewhat above the rounded end and the wall is pushed inwards and upwards to form an invagination, or deep depression. This is most easily done with a stout wire flattened a little at the end. The wire is held in the depression until the glass sets, then it is given a sharp twist: The flattened portion acts as a lever and shatters the glass at the upper point of the invagination, leaving a hole

the position shown (fume inlet). The tube is ready for use as on as it has cooled.

The tube is first filled with glass beads or glass wool to a point mewhat above the fume inlet. The glass beads or wool sup- ort a column of loosely packed soda lime or other suitable ab- rbent. A wad of cotton may be placed above this.

The filled tube is fitted tightly into the neck of the Kjeldahl sk by means of a collar of folded filter paper, as suggested by enwood and Garey (*1*). The tube must not project down too r into the neck of the flask; otherwise spray may collect on it. efore beginning the digestion, the cotton wad is removed and e soda lime moistened with a little distilled water. The wad ay then be replaced.

The charge in one tube may last for several digestions. The ling and fitting of the tube require only a few minutes.

This type of absorber has been used with Kjeldahl flasks 100- to 500-cc. capacity and with a variety of digestions, cluding feeds, sugars, and pure organic compounds. It has own itself satisfactory, enabling the digestions to be carried it in the open room without inconvenience. Occasionally a all amount of sulfuric acid mist has escaped from the tube the beginning of a digestion, but this has always ceased ter a few minutes.

Because of the shape of the opening, any spray which spatters up onto the bottom of the tube may readily be washed off the rounded end with the stream from a wash bottle, and any small condensate which forms inside the tube will collect safely inside the rounded end.

Summary

A test tube, perforated near the bottom, is filled with moist soda lime or other suitable absorbent, the perforation being first shielded with glass beads or glass wool, and is then tightly fastened into the neck of the Kjeldahl flask by means of a collar of folded filter paper. This device absorbs and prevents the escape of practically all irritating fumes during the digestion, and thus permits it to be carried out in the open room without inconvenience. It may be modified for use in other reactions which evolve unpleasant fumes.

Literature Cited

(1) Henwood, A., and Garey, R. M., *J. Franklin Inst.*, **221**, 531–8 (1936).
(2) Henwood, A., and Garey, R. M., *Science*, 76, 524 (1932).

Received July 9, 1937.

A Self-Filling Pycnometer

G. F. HENNION
University of Notre Dame, Notre Dame, Ind.

THE pipet type of pycnometer is widely used for the determination of densities, particularly of organic liquids, it has the serious inconvenience that filling requires suc- on. As this is frequently accomplished orally, obnoxious apors may be drawn into the mouth. Precise adjustment the liquid volume is also frequently troublesome.

By making a few minor changes in construction, pyc- ometers have been made in this laboratory which are entirely lf-filling and extremely easy to adjust. Figure 1 illustrates ne of these. The dimensions are somewhat variable ex- pt for the capillary tip, *A*, and tube *D*. The pycnometer used as follows:

Hold with thumb and second finger at point *F*, place index ger over opening *G*, and dip capillary tip *A* beneath the surface the liquid whose density is to be determined, contained in a all crucible or beaker. Remove pressure at *G*. The pyc- meter fills automatically, owing to capillary rise of liquid at *A* d overflow at *B*. When the liquid reaches the calibration ark, apply pressure at *G* and withdraw *A* from the liquid. Wipe e capillary tip, rock the pycnometer gently to withdraw the uid from *AB*, suspend in a balance, and weigh.

If desired, the pycnometer may be filled beyond the calibra- n mark and suspended in a constant-temperature bath main- ined at the desired temperature. Excess liquid may be subse- ently withdrawn at *A* in the usual manner.

The capillary section at *AB* must extend beyond both sides bend *B*. Too fine a capillary causes very slow filling. A 2- l. pycnometer used by the author fills with water in 18 seconds 25° C. If tube *D* has an internal diameter greater than 2 m. the descending column of liquid tends to break, causing air bbles. Naturally the pycnometer must be cleaned and dried fore use. The presence of a small slug of liquid at *E* prevents uid rise at *A*.

A number of these pycnometers have been constructed by e author, with volumes varying from 0.75 to 10 ml., and ve been used with organic liquids of various densities and rface tensions. The pycnometers are readily constructed m selected pipets and are calibrated without difficulty in the usual manner. A fine wire, connected at *C* and *F*, serves for suspending the pycnometer in the balance.

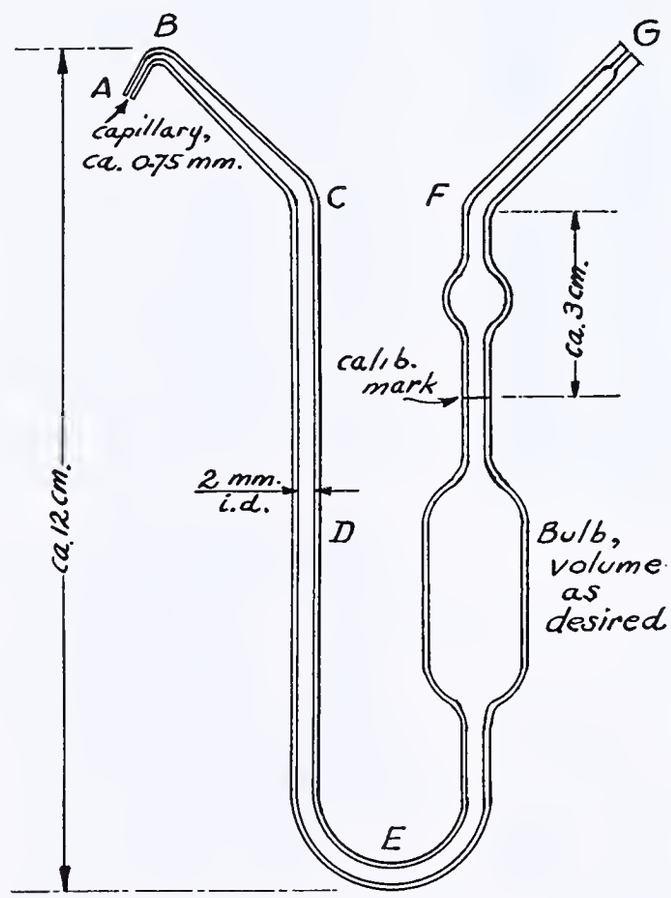

Figure 1. Self-Filling Pycnometer

Received August 13, 1937.

A Laboratory Gas-Washing or Absorption Unit

M. W. BRENNER AND G. L. POLAND
Research Laboratories, United Fruit Company, New York, N. Y.

THE absorbing unit described herein was developed in this laboratory for complete absorption of various gases or vapors by volatile solvents. The literature contains many references to gas-absorption vessels, such as those described by Milligan (*4*), Martin (*2*), Shaw (*5*), and Martin and Green (*3*), which seem to be satisfactory for general laboratory use. However, it is believed that the apparatus illustrated in this article has certain advantageous features not found in the units mentioned above.

This apparatus, Figures 1 and 2, about 45 cm. (18 inches) high from the fritted-glass diffusing plate to the top of the spiral, gives a path of travel of about 225 to 250 cm. (90 to 100 inches), compared with approximately 175 cm. (70 inches) in the Martin unit, 100 to 112 cm. (40 to 45 inches) in Milligan gas-washing bottles, and considerably less in other types. The side leakage which is found in Milligan bottles, particularly when the spiral and sleeve do not fit perfectly, and the channeling characteristic of packed bead columns, especially at low rates of gas flow, are avoided in this equipment.

FIGURE 1

The jacket around the spiral makes it possible to minimize the loss of a volatile absorbing medium by circulating cooling water or brine around the spiral, or to maintain the system at a temperature above that of the atmosphere. This method is more satisfactory than the regulation of temperature by putting an absorption bottle in a bath, both for economy of space and freedom of movement and manipulation. Further, the jacket gives the unit structural stability and ease of support not possessed by the Martin apparatus.

Construction

The unit was made by sealing a porous fritted-glass diffusing plate, *A*, to the delivery end of a 37.5-cm. (15-inch) Graham spiral condenser (made by the Scientific Glass Apparatus Co., Bloomfield, N. J., to the authors' specifications). The sintered plate was similar to Jena plates of porosity 1 (coarse). A side-arm test tube, *B*, was fitted to the delivery tube by a ground-glass joint. The clearance between the fritted-glass plate and the bottom of the reservoir, which had a capacity of about 50 to 60 ml., should be 1 cm. or less. The removable head, *C*, with a sealed-in outlet tube, was connected by a ground joint and fitted with a stopper. The tubing used throughout was 8 to 9 mm., inside diameter. A similar, smaller unit, having 5- to 6-mm. tubing and a 25- to 30-ml. reservoir, also gave satisfactory service, though the capacity and rate of flow were somewhat lower.

It is necessary to match the reservoir capacity to the diameter of tubing used. The volume of liquid between points *A* and *B* should be almost sufficient to fill the internal spiral. In this way, by varying the height to which the reservoir is filled, before the passage of the gas to be washed, it is possible to regulate the height to which the liquid will be forced. Thus the effective path of the gas through the absorbing medium may be set anywhere between 12.5 and 250 cm. (5 and 100 inches).

Operation

Sufficient solvent is added to fill the reservoir at the bottom t just below the side-arm inlet tube, *B*. Suction is applied to th outlet tube, *C*, in the head (or positive pressure on the inlet side The liquid is forced up into the spiral, and the gas, broken int small bubbles by the fritted-glass plate, *A*, travels up throug the solvent. The liquid is carried up to some extent but de scends by gravity, resulting in constant mixing of the absorbin medium and washing of the walls of the spiral. If the solvent definitely volatile, loss may be largely prevented by passin cooling water or brine through the jacket, the level of liquid bein adjusted to give sufficient condensing surface on the upper portio of the spiral.

The efficiency and operating characteristics were dete mined in a series of simple tests, similar to those employe by Shaw (*5*). The rate at which a gas may be passed is de pendent upon the character of the absorbing medium, bein influenced by the gravity, viscosity, and surface tensio A rate of approximately 80 liters per hour has been found t be the maximum possible. With water as the liquid absorb ent a rate greater than 60 liters per hour had a tendency t carry the liquid up out of the spiral into the head. Th head is of sufficient volume so that no liquid is carried ove but absorption at these extreme rates becomes inefficien

This rate (maximum 60 to 80 liters per hour) is not as hig as the maximum possible with a Milligan bottle. Howeve two Milligan bottles were tested and it was found that on showed considerable side leakage. This first became apprec able at a rate of 10 liters per hour and it was estimated tha at 20 liters per hour more than 50 per cent of the gas was no following the spiral, but was passing vertically through th liquid between the spiral and the sleeve. The other Milliga

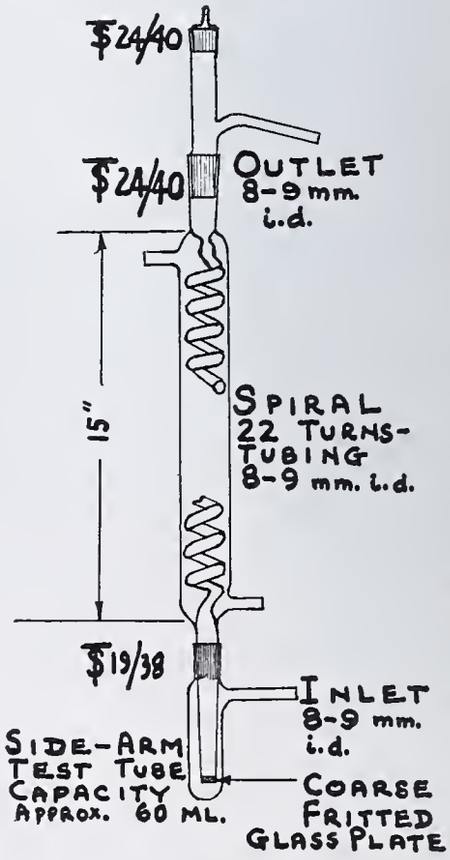

FIGURE 2

ottle performed well up to 60 liters per hour, and by-passing rst became significant at this rate.

The time of contact in a well-matched Milligan bottle at a ate of 60 liters per hour is roughly 0.7 second, whereas the me of passage through the absorber described herein is bout 5 to 6 seconds at that rate.

Carbon dioxide solutions in air were passed through potasium hydroxide solutions (approximately 0.5 *N*) at varying ates and the gas stream was then checked by means of the ethod of Higgins and Marriott (*1*) and found free of carbon ioxide.

Air containing 8 to 10 per cent of ammonia was passed hrough the unit which had been charged with 50 ml. of 0.1 *N* ulfuric acid to which a few drops of methyl orange had been dded. A trap containing 2 drops of 0.1 *N* sulfuric acid in vater colored with methyl orange was connected to the outet. The rate of flow was 60 liters per hour. Flow was mainained for 60 seconds and the absorbing liquid was washed out f the unit by adding several small portions of water through he opening in the head. The solution was then titrated to he neutral point with 0.35 ml. of 0.1 *N* sodium hydroxide. The color of the solution in the trap had not changed and 2 rops of 0.1 *N* sodium hydroxide were required for neutralizaion.

In a second similar test, with the same setup except that the trap contained 5.00 ml. of 0.1 *N* sulfuric acid, the ammonia-air solution was passed through until the absorbing solution had just passed the neutral point. Titration of the acid in the trap showed that only 0.12 ml. of the acid in the trap had been consumed.

The apparatus has also been found to give satisfactory results in the absorption of unsaturated hydrocarbons in liquid bromine, as well as in bromine solutions in petroleum ether, carbon tetrachloride, and potassium bromide–water solution.

The volume of absorbing liquid is small, only 20 to 50 ml. being required, and the absorbing medium or any soluble or liquid products of absorption may be quantitatively recovered by rinsing the spiral from the top with a small amount of wash liquid.

Literature Cited

(1) Higgins, H. L., and Marriott, W. McK., *J. Am. Chem. Soc.*, 39, 68–71 (1917).
(2) Martin, W. McK., Ind. Eng. Chem., Anal. Ed., 8, 396 (1936).
(3) Martin, W. McK., and Green, J. R., *Ibid.*, 5, 114–18 (1924).
(4) Milligan, L. H., Ind. Eng. Chem., 16, 889 (1924).
(5) Shaw, J. A., *Ibid.*, Anal. Ed., 6, 479–80 (1934).

Received May 29, 1937.

A Thermoregulator

For Direct Control of the Electric Circuit in a Heating Bath

FREDERIC E. HOLMES
Children's Hospital Research Foundation and Department of Pediatrics, University of Cincinnati, Cincinnati, Ohio

IT IS OFTEN satisfactory to control the temperature of a water bath or other heating bath to within 1° or 2°. Such operations as digestions, saponifications, and evaporations may not require closer control. The thermoregulator described here fulfills such requirements, and in addition eliminates the use of the relay usually needed in a highly sensitive temperature-control system.

The regulator employs the mercoid principle, the current being broken between mercury and mercury in an atmosphere of hydrogen. The spark occurring at the break is isolated within the apparatus, affording protection against the danger of igniting volatile inflammable liquids. There are no outside contacts. Further protection is given in case of breakage by the location of the switch below the surface of the liquid of the bath.

Two of these regulators have been in constant operation, 24 hours a day, for more than a year, one maintaining an average temperature of 85° (for the saponification of esters) and the other a maximum temperature of 60° (for evaporation of petroleum ether) in the cholesterol method of Kirk, Page, and Van Slyke (*1*). The one which maintains a temperature of 85° makes and breaks the current supplying a 600-watt immersion heater.

Breaking the mercury circuit in a nearly horizontal capillary tube (Figure 1) minimizes the change of pressure due to change in length of the mercury column, thus in turn reducing the change in temperature required to produce a wide break in the mercury.

The details of construction may be obtained from Figure 1, which is made to scale. Considerable latitude is permissible in most of the dimensions. The most critical part of the glass blowing is the making of the circuit-breaker tube, particularly the shaping of its junction with the vertical tube. Without increasing the width of the opening into the vertical tube, the top of the junction is rounded slightly to avoid trapping hydrogen and the bottom is kept sharp to ensure breaking the circuit uniformly at the desired temperature. The tube is slanted from the horizontal only enough to prevent bubbles of hydrogen from remaining in it (slope 2 to 13, angle 8°, approximately). The best size of bore for this tube is 1.5 mm. The most satisfactory size for the vertical tube is 5-mm. inside diameter. The large expansion and manometer bulbs reduce undesirable pressure changes, and help to reduce the lag. For some purposes the manometer bulb and plunger might be made longer to allow adjustments over a wider temperature range.

The construction of the plunger and terminal blocks can obviously be varied to suit individual preference. The method of making the plungers actually used is given as a suggestion.

A 3-mm. (0.125-inch) threaded brass rod, or a rod threaded over enough of its length to allow vertical movement of the plunger through the entire length of the manometer bulb, is cut off at about 5 mm. less than the length required to extend to the bottom of the glass plunger. A platinum electrode long enough to dip into the mercury when the bath is cold is fused directly to the brass rod. A glass tube having about one-third the cross-section area and about half the length of the manometer bulb is slipped over the electrode and lower end of the threaded rod and then fused to the platinum wire about 5 mm. from its junction with the brass rod. The space between the open top of the glass tube and the rod is sealed with wax.

When a threaded iron rod is used as an alternative, a bead of copper is fused to the lower end of the rod, using borax as a flux, and the platinum electrode is fused into this bead. The threaded

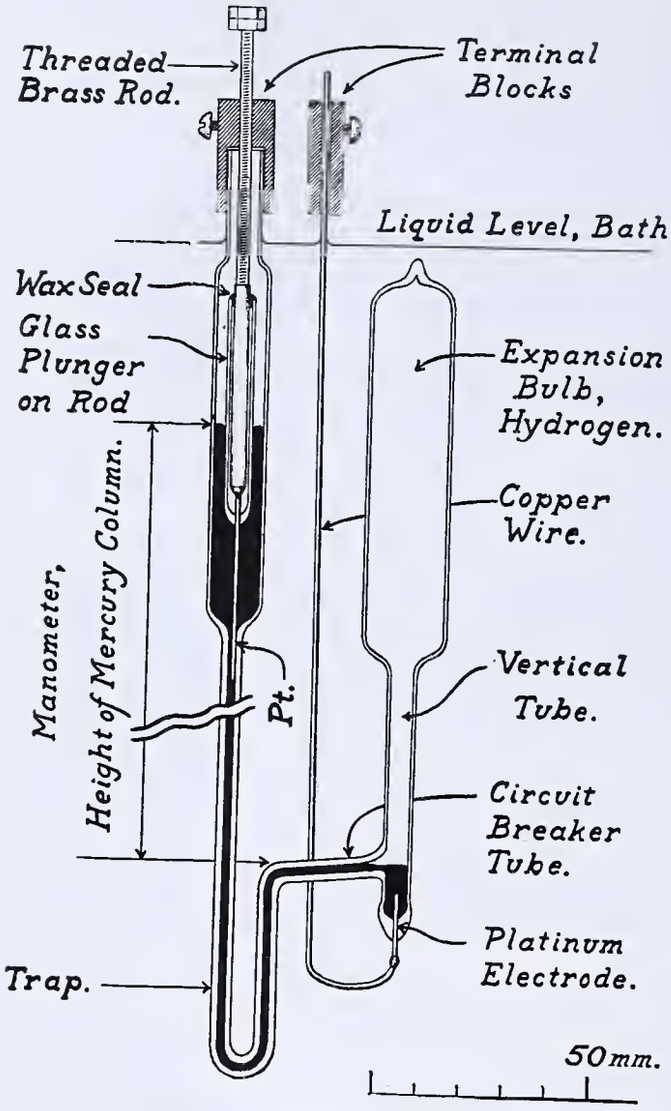

FIGURE 1. DIAGRAM OF APPARATUS

rod, plunger, and electrode may be made entirely of a metal which does not amalgamate with mercury.

The seal-off tube at the top of the hydrogen bulb is constricted to a hairlike capillary with very thick walls, because it is to be sealed off with positive pressure in the apparatus. Mercury is dropped into the manometer until the trap, the circuit-breaker tube, and the electrode well at the bottom of the vertical tube are filled, and the mercury is at the same level in both sides of the U, with the mercury just broken in the circuit-breaker tube. With a cotton plug in the top of the manometer to prevent loss of mercury, the expansion bulb is flushed with hydrogen until all air has been displaced. The rubber tube from the hydrogen supply to the seal-off tube is closed by a clamp and disconnected from the supply. The clamp is opened cautiously, allowing hydrogen to escape slowly until the mercury shows that it is at atmospheric pressure, and is then clamped tight again. More mercury is added through the manometer, any bubbles of air being teased out with a wire. The seal-off tube is then heated just to the softening point and its bore is closed by pulling and twisting. The heat is increased and the seal completed.

The regulator is connected in series with the immersion heater. Mercury is added until the desired temperature is obtained.

This regulator has a slight disadvantage common to the gas-filled type, in that adjustment must be made to compensate for changes in barometric pressure, except when a deviation of 5° or 6° is permissible. If closer regulation is required, some device, such as the plunger shown, may be used. The effects of pressure changes are so constant that adjustment can be made to known barometric pressure against a scale held behind the nut on the threaded rod and resting on the top of the terminal block. With a little experience adjustment can be easily and quickly made, without the scale, from the observed deviation of the thermometer from the d sired temperature.

In order that the regulator may operate at a given temper ture and within the range of adjustment for barometr changes, the length of the manometer should be such that, maximum local barometric pressure, the top of the mercu column will reach the middle of the bulb when the plunger raised above the mercury. The height of mercury colum required for the desired temperature, at this pressure, is ca culated by means of the following equation:

$$\frac{273 + \text{desired temperature}}{273 + \text{room temperature}} \times \text{maximum local barometric pressure} = \text{height of Hg colum}$$

A plunger 45 mm. long and having an outside diameter 7 mm., operating in a bulb of 11-mm. inside diameter, will com pensate for a drop in barometric pressure of approximatel 28 mm. below the maximum.

Literature Cited

(1) Kirk, E., Page, I. H., and Van Slyke, D. D., *J. Biol. Chem.*, 10 203 (1934).

RECEIVED July 30, 1937.

INSPECTION OF FINISHED EMPTY GELATIN CAPSULES UNDER A STRONG LIGHT, ELI LILLY AND CO., INDIANAPOLIS, IND.

MICROCHEMISTRY

Sublimed Mercuric Iodide

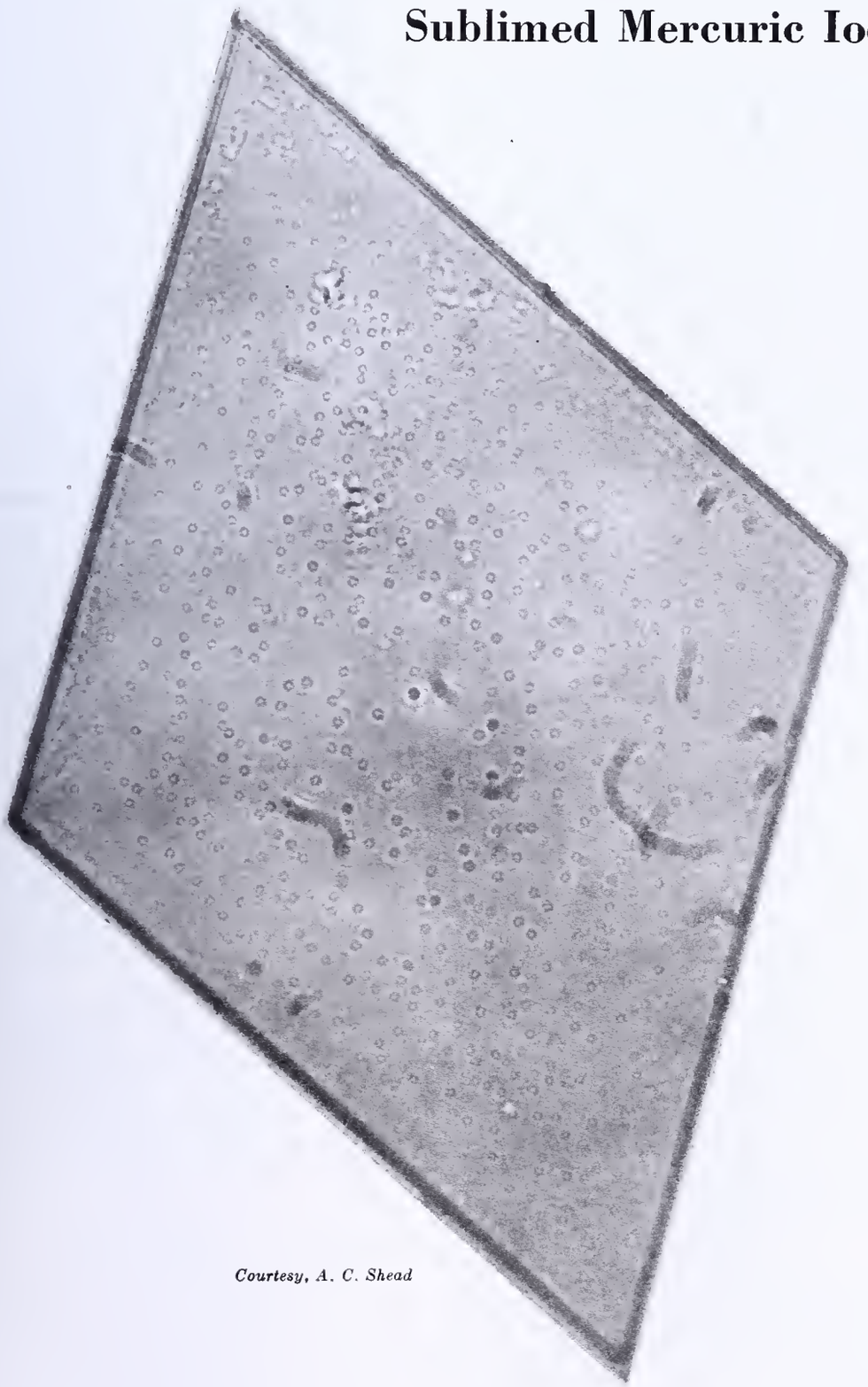

Courtesy, A. C. Shead

Qualitative Analysis of Microgram Samples

General Technic

A. A. BENEDETTI-PICHLER, Washington Square College, New York University, New York, N. Y.

A general working technic applicable to the qualitative analysis of 1-microgram solid samples is described. The chemical work is performed in cones of 0.5-cu. mm. capacity which are prepared from capillary tubing of approximately 0.5-mm. bore. Most of the manipulations are carried out by observation with the low-power microscope. The transfer of solutions is performed with the use of micrurgical pipets operated by a hypodermic syringe. A mechanical stage and a manipulator with rack and pinion motions in the three directions are used to bring the tools into the proper positions under the microscope. Working procedures are described in the analysis of 0.01 cu. mm. of a solution containing 0.1 μg. of antimony and 0.01 μg. of bismuth. The separations obtained have the same sharpness as in the analysis of large quantities. Confirmatory tests of sufficient sensitivity are already available.

RELATIVELY simple analytical procedures have been carried out in the past by different workers with solid amples as small as and smaller than 1 microgram (*1, 4, 6, 7, , 10–13*). The present paper is concerned with the develop- nent of a general technic applicable to the qualitative analy- is of quantities of the above-mentioned order, where "analy- is" refers to the preliminary separation of the constituents ather than to the performance of the final confirmatory tests. t seems reasonable to require that a qualitative analysis for he identification of a substance should permit the detec- ion and estimation of constituents representing 1 per cent or ore of the total mass of the sample. Accordingly, a micro- ram procedure of analysis should be sensitive to 0.01 micro- ram. A very large number of the confirmatory tests used at resent in microanalysis possess limits of identification equal o and less than this quantity, a fact which eliminates the ecessity of providing suitable confirmatory tests. The per- ormance of chemical tests in the hanging drop with the use f the micromanipulator, as recommended by Chambers (*4*) s a students' experiment, should allow the attainment of xtremely high sensitivities with most reactions. A systematic vestigation of this technic for the performance of con- rmatory tests is in progress.

Table I. Surface/Volume Ratios of Solutions in Containers

	100-Ml. Beaker of 4.4-Cm. Diameter	Microcone of 0.7-Ml. Capacity	Capillary Cone
olume of solution, ml.	25	25×10^{-3}	25×10^{-6}
rface of solution, sq. cm.	26	24×10^{-2}	58×10^{-4}
rface, sq. cm. per ml. of solution	1	10	230

As to the application of a scheme of analysis to microgram mples, it was decided to retain the concentrations of solu- ons and reagents customary in macroanalysis in order to pproximate the chemical conditions in the analysis of large mples. This principle has also been applied with success the analysis of milligram samples. Of course, the mainte- ance of the customary concentrations implies a reduction of e volumes of solutions and reagents proportional to the de- ease of the mass of the solid sample. A simple calculation ows that on a microgram scale the volumes of solutions and agents will range between 0.001 and 0.2 cu. mm. It be- mes imperative that the design of any apparatus used on ch a scale permit the confinement of the solutions and precipitates in a small space. Any spreading out would lead to the irretrievable loss of the material under investigation. After an unsuccessful attempt to use fine capillaries (*3*), these considerations led to the use of the capillary cone described below.

In spite of the maintenance of the customary concentrations, there remain, however, two factors of possibly decisive influence on the outcome of chemical reactions as seen by the observer, which must vary when the volume of the reacting solution is decreased. One of these factors is the surface area of the solution; the other is the time required for the reaction to start.

The relative surface of a spherical droplet varies inversely with the cube root of its volume: $s/v = 4.83\, v^{-1/3}$. Keeping the concentrations identical, the relative surface areas of the solutions of the microgram procedures will be approximately 10 times larger than those of the solutions of milligram procedures and approximately 100 times larger than those of the solutions of gram procedures (macroanalysis). These figures are only approximate, but they are in satisfactory agreement with the results of more accurate calculations (Table I), in which the actual forms and dimensions of the respective containers are considered.

The time lapsing, on the average, until a reaction starts will depend on the number of effective collisions between the molecules of the reacting substances per unit of time, or, in other words, on the probability of the occurrence of a sufficient number of effective collisions per unit of time. There can be no doubt that this probability must decrease when the absolute mass of reacting substances decreases, other conditions remaining constant. A delay in the formation of crystal nuclei and a consequent delay in the formation of precipitates might reasonably be expected when chemical work is performed on a very small scale. However, no such phenomenon has been observed in the capillary cone up to the present; neither was there any evidence of an influence exerted by the increase in the ratio of surface area to volume. Experiments performed in Chambers' laboratory (*4*) indicate that with even much smaller quantities than are met with in a microgram procedure no serious disturbances are caused by the two factors considered.

While the analysis of milligram samples hardly requires the use of a microscope, most operations on the microgram scale need continuous microscopical observation. The reagents and most of the apparatus used are assembled on a small glass slide, which is placed in a moist chamber to prevent the otherwise rapid evaporation of the small volumes of solutions. The solution under investigation remains most of the time in this moist chamber on the stage of the microscope. For centrifuging, heating, or treatment with gases, the capillary cone containing the solution is transferred into capillaries which are also designed to retard evaporation.

Apparatus

Capillary Cone. The chemical reactions are carried out in a small centrifuge cone which is prepared from a short piece of capillary, and thus may reasonably be called a "capillary cone" (Figure 1). The cone has a capacity of approximately 0.5 cu. mm., and is made from a thin-walled capillary of about 0.5-mm. bore. The center portion of a 6- to 10-cm. piece of the capillary is heated in the edge of a nonluminous Bunsen flame until the glass fuses together, forming an elongated bead. Outside the flame, the bead is drawn out to a rod 2 to 5 cm. long and approximately 0.2 mm. in diameter. Cutting in the proper places gives two capillary cones with handles. The length of the cone proper should be 2 mm., and one-half of this length should be formed by the taper of the capillary cone. The handle may be from 0.5 to 2 cm. long.

Figure 1. Capillary Cone

The capillaries used for the preparation of the cones may be of any kind of glass, but they must be perfectly clean inside and outside. The best policy is to use capillaries freshly drawn out from clean glass tubing. These capillaries and the apparatus made of them should never be touched with the fingers, since on using the apparatus in the moist chamber fingerprints develop into a pattern of small droplets which greatly interfere with the microscopic observation of the contents of capillary cones, reagent containers, or measuring capillaries. Gloves or finger cots may be worn when preparing or handling any device to be used in the moist chamber. The finished capillary cones are kept in a screw-cap vial.

Reagent Containers. Containers for reagents and wash liquids are given the same general form as the capillary cones. They may possess far greater capacities than the capillary cones, and 5- to 8-mm. lengths of the original capillary are retained with the handles (Figure 2, *A*, *B*, *C*). The reagent containers are prepared from a long piece of capillary of a uniform bore of 0.5 to 1 mm., which bore is measured under the microscope (*2*) and recorded on the vial in which the reagent containers are kept until used.

Measuring Capillaries. Very small volumes (0.001 to 0.01 cu. mm.) of solutions are measured in capillaries of 0.05- to 0.2-mm. uniform bore. Such fine capillaries are drawn out from thin-walled capillaries of 0.8- to 1-mm. bore (*2*) and cut into lengths of 2 to 3 cm. each. To control the uniformity, the diameter of the bore is measured at both ends of the capillary pieces and recorded. Finally one end of each short piece of fine capillary is fused shut. The measuring capillaries (Figure 2, *E*) thus obtained may be kept in pieces of wide capillary, sealed at both ends.

Capillary Carrier. A strip of glass, 10 × 30 mm., cut from a microscope slide, is used for the assembly of the apparatus and reagents used in the analytical procedure. One-half of the top surface of the carrier is covered with a layer of vaseline approximately 1 mm. thick, by placing small portions of vaseline on the slightly heated carrier slide. The capillary cones, reagent containers, and measuring capillaries needed are then placed side by side on the carrier, so that the handles are embedded in the vaseline. Those parts of the capillaries, cones, and containers in which the actual work is performed project beyond the edge of the carrier (Figure 2).

Moist Chamber. All the work requiring microscopical control is carried out within a moist chamber. The form used with the micromanipulator of Chambers (*4*, *9*) was found satisfactory.

Microscope. The microscope must be fitted with a revolving mechanical stage which can be moved so far back that the coverslip roofing of the moist chamber completely clears the opening of the stage. A revolving nosepiece, permitting the rapid interchange of 5 ×, 10 ×, and stronger objectives, is recommended. The illumination should allow the change without much delay from observation with transmitted light to observation with reflected light. A small microscope lamp held by an adjustable stand may serve for this purpose.

Mechanical Manipulator. A Leitz manipulator, permitting motions in the three directions by means of rack and pinion, is used for the operation of the micropipets.

Micropipets and Injection Apparatus. The micropipets used for the transfer of liquids are prepared according to the directions of Chambers (*4*, *9*) and operated following his instructions with the use of a hypodermic syringe (*5*). Pipets with very gradual, fine, straight taper are best suited for this type c work. The micropipets must be straight in order to be easil introduced into the horizontally lying capillary cones and re agent containers. The diameter of the bore should be approx mately 1 μ at the tip to restrict the flow of liquid sufficiently to per mit dispensing definite, small volumes of solutions. The syring is filled with water as in micrurgical work. The point of the m cropipet is rinsed after use by repeatedly taking in a suitabl cleaning fluid and expelling it. When working with pipets hav ing a relatively wide opening, the rinsing can often be performe with the water contained in the injection apparatus (syringe connecting copper tube, and adapter for the micropipet). It i usually sufficient to press out a small amount of this wate through the point of the pipet. After rinsing in this way, th whole pipet is filled with water, which must be sucked back befor resuming work so that the meniscus is located in the part of th pipet close to the adapter. This operation sometimes cause trouble because of the surface tension force holding the liquid i the point of the pipet. Approaching the point of the pipet wit a hot glass rod while applying suction with the plunger of th syringe will easily overcome this difficulty.

Experimental Procedure

The analysis of 0.01 cu. mm. of a solution containing 0. μg. of antimony and 0.01 μg. of bismuth, corresponding to 1 and 1 per cent of the mass of a 1-μg. solid sample, provides suitable example for the description of the working technic According to the customary procedure, the solution of anti mony and bismuth is to be diluted with 0.1 cu. mm. of wate and then saturated with hydrogen sulfide. The precipitat of the sulfides is to be separated from the solution and washe with 0.02-cu. mm. portions of 0.3 *M* hydrochloric acid contain ing ammonium chloride. The washed sulfides are to be treate with 0.01 cu. mm. of 48 per cent $Na_2S \cdot 9H_2O$ solution. Th solution of the antimony sulfide is finally to be separated fron the residue of bismuth sulfide, and the antimony sulfide pre cipitated by the addition of 0.1 cu. mm. of 1 *M* sulfuric acid.

Preliminary Preparations. The performance of th experiment is begun by selecting a suitable micropipet, fasten ing it in the adapter held by the manipulator, and testing th proper operation of micropipet and syringe.

As the volumes of all the solutions are to be measured witl the use of the eyepiece micrometer and capillaries of known

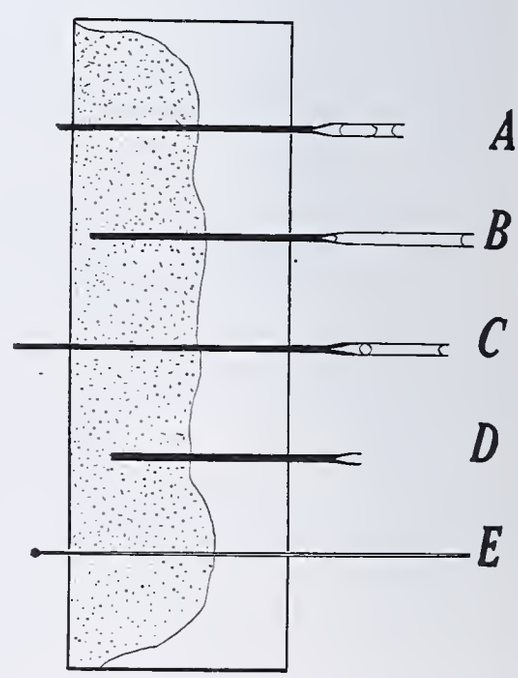

Figure 2. Capillary Carrier with Assembly of Apparatus

A, *B*, *C*. Reagent containers
D. Capillary cone
E. Measuring capillary

ore, preparation of a table of the required micrometer read-
ıgs is recommended. If the capillary to be used for measur-
ıg the 0.01 cu. mm. antimony-bismuth solution has a bore
f 0.132 mm., calculation shows that a 0.73-mm. length will
old 0.01 cu. mm. If one division of the eyepiece micrometer
rresponds to 33μ, 0.73 mm. is equal to 22 divisions. The
ıpillary, from which the reagent containers have been made,
ıay have possessed a bore of 0.417 mm. The lengths of re-
gent containers holding 0.1, 0.02, and 0.01 cu. mm. are then
ıual to 0.736, 0.147, and 0.074 mm., or 22, 4.5, and 2 divi-
ons of the micrometer scale, always assuming that 1 division
ıuals 33μ.

The required apparatus is assembled on a capillary carrier
s shown in Figure 2: three reagent containers, *A*, *B*, and *C*,
ıe empty capillary cone, *D*, and a measuring capillary *E*.
he reagent containers are filled by capillary pipets operated
ith the mouth previous to placing them on the carrier.
ontainer *A* holds the acid antimony-bismuth solution (10
g. per ml. of antimony and 1 mg. per ml. of bismuth). *B*
filled with water, and a 1 per cent solution of ammonium
ıloride in 0.3 *M* hydrochloric acid is introduced into *C*.

The filter-paper lining of the moist chamber is soaked with
stilled water, and the carrier with the apparatus assembly
placed in the rear of the cell which is immediately roofed
ith the cover slip. The chamber is transferred to the micro-
ope and clamped into the mechanical stage.

Measuring the Sample. Using transmitted light and a
tal magnification of the microscope of 40 to 60 ×, the open-
g of reagent capillary *A*, containing the antimony-bismuth
lution, is focused so that the plane containing the axis of
e capillary is in sharp focus. The reagent container is ori-
ted parallel to the axis of the micropipet; it should lie in a
ameter of the field of vision and extend into only one-third
the field.

Using the unaided eye, the point of the micropipet is brought
ose to the opening of the reagent container. Looking into
e microscope, one should see a blurred image of the point
the pipet. The point is now brought in focus by raising
lowering it with the manipulator, which is also used for
inging it finally close to the opening of the reagent container
igure 3). The tip of the pipet and the axis of the container

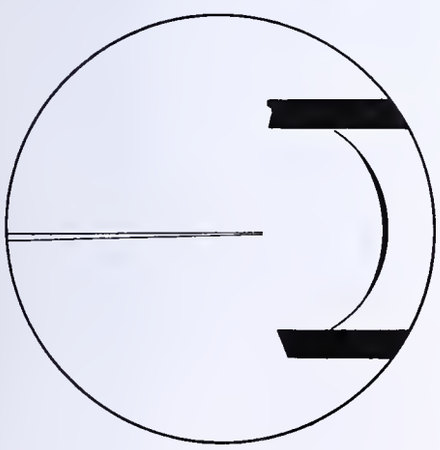

Figure 3. Micropipet Ready for Insertion in Reagent Container

made parallel by rotation of the stage. The point of the
pet will now be located in the axis of the capillary, if the ad-
stment is always performed in such a way that the micro-
ope is focused on the axial plane of the container and the
pet is brought in focus by the use of the manipulator only.

The following procedure, which is used here only for the
eliminary measurement of the sample, is of sufficient accu-
y to be used for the measurement of reagent solutions.

The micrometer eyepiece is inserted and rotated to make the scale appear parallel to and in the image of the container. The container is moved forward with the use of the mechanical stage until the opening of the pipet is immersed in the solution beyond that length which is to be taken up by the pipet and until the front meniscus of the solution coincides with a convenient division of the micrometer scale. A length of 3 divisions is to be taken up this time to have approximately 50 per cent more than the required volume (2 divisions = 0.01 cu. mm.). Accordingly, the point of the pipet is immersed beyond division 13 of Figure 4, and suction is applied carefully with the plunger of the syringe.

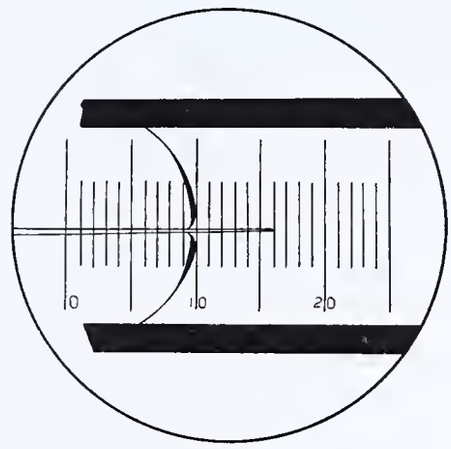

Figure 4. Micropipet in Position for Taking Up Definite Volume of Reagent

The meniscus of the solution slowly recedes as the liquid enters the micropipet. When the meniscus has moved 3 divisions of the micrometer scale (coincides with division 13 of Figure 4), the reagent container is rapidly withdrawn into its original position (Figure 3) with the use of the mechanical stage. The micropipet contains now approximately 0.015 cu. mm. of the solution.

Use of the Measuring Capillary. The micropipet is backed up horizontally for approximately 1 cm., then, with the use of the mechanical stage, the measuring capillary is brought into the diameter of the field of vision so that it extends to the center of the field. Rotation of the stage makes capillary and micrometer scale coincide. The microscope is focused on the axial plane of the measuring capillary and then the opening of the capillary is approached with the point of the micropipet, observing with the unaided eye. The position of the micropipet is corrected until the blurred image of the tip appears in the microscopic field. The point of the pipet is moved into focus, using the vertical adjustment of the manipulator. The tip of the micropipet is introduced into the bore of the measuring capillary with the use of the mechanical stage; the opening of the pipet should enter the measuring capillary to a length of at least 75 per cent of that of the liquid column to be measured off. In general, it does not matter whether or not the point of the pipet touches the wall of the measuring capillary. When pressure is supplied to the plunger of the syringe, the solution first forms a droplet at the point of the pipet which finally fills the bore of the capillary. As the measuring capillary fills, the micropipet is gradually withdrawn. Using pressure and suction supplied by the syringe, the volume of the solution is changed until the two menisci are the proper distance (22 divisions of the micrometer scale, Figure 5) apart, after which the micropipet is completely withdrawn.

Cleaning the Micropipet. The micropipet may be cleaned outside the moist chamber by blowing its contents into a narrow strip of thin filter paper, and repeatedly taking in small volumes of dilute hydrochloric acid from a drop hanging from the end of a glass rod and discharging upon filter paper. The strip of paper is best attached to the same glass rod which carries the drop of acid; the rod should be held by a stand.

Transfer of Solutions to the Capillary Cone. The cleaned micropipet is inserted into the measuring capillary as described above, and all the solution is taken up by suction

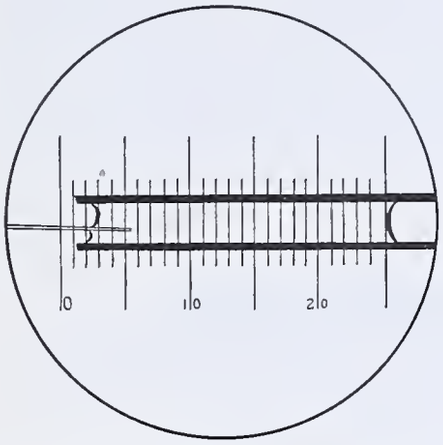

Figure 5. Liquid Column in Measuring Capillary

Length adjusted to 22 divisions of micrometer scale

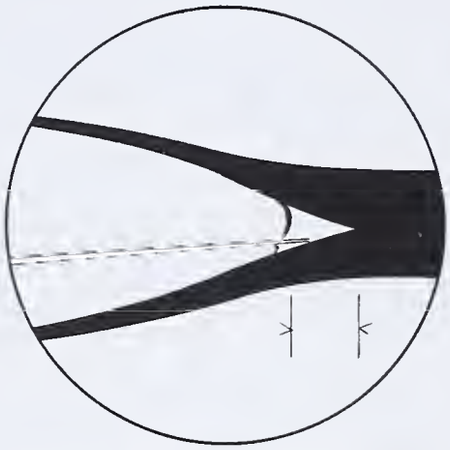

Figure 6. Transfer of Solution to Capillary Cone

supplied by the syringe. Maintaining a slight suction all the time, the micropipet is slowly withdrawn from the measuring capillary. Now the capillary cone is brought in position with its opening close to the center of the field. The microscope is focused on the point of the taper, which lies in the axis of the cone. The micropipet is inserted in such a way that its opening touches the inside wall of the capillary cone close to the point of the taper of the cone. When pressure is supplied with the syringe, the point of the cone fills with the solution (Figure 6). When all the solution is discharged, as indicated by the meniscus in the point of the pipet or by the appearance of air bubbles in the liquid, the capillary cone is immediately withdrawn with the use of the mechanical stage without releasing the pressure on the plunger of the syringe. The micropipet is cleaned as before.

Measuring Reagent Solutions. Reagent container *B* (Figure 2) is brought into the field of the microscope, the micropipet is inserted, and a column of water corresponding to a volume of 0.1 cu. mm. (22 divisions of the micrometer scale under the conditions stated in the beginning) is taken up with the pipet, using the same procedure as in the preliminary measurement of the sample solution. The water is immediately transferred to the solution in the capillary cone. Use of a black background and observation with reflected light permit the observation of the white precipitate of basic chlorides.

Treatment with Hydrogen Sulfide. A simple calculation shows that only 0.275 cu. mm. of hydrogen sulfide measured under normal conditions, is required for the precipitation of 1 μg. of antimony as antimony sulfide. The following procedure obviously ensures the presence of a sufficient excess of hydrogen sulfide to accomplish complete precipitation:

The capillary cone is removed from the moist chamber with the use of forceps, the handle is wiped free of vaseline, and then the cone is placed in the capillary of the device shown in Figure 7. The opening of the capillary is drawn out to a fine tip, *A*, and the wide tube, *B*, which contains a plug of cotton, is connected to the hydrogen sulfide generator. The air in the capillary is displaced by hydrogen sulfide, and when the latter begins to escape from tip *A*, the point of the tip is sealed. Finally the capillary is fused shut at the constriction, *C*, drawn off from the wide part of the tube, and placed for 3 minutes in water at 70° C. The formation of an orange precipitate in the capillary cone can be observed with the unaided eye. The precipitation is allowed to stand for 5 to 30 minutes at room temperature; then the capillary is cautiously cut open at *D*, placed in a microcone, as shown in Figure 8, and centrifuged with the use of an ordinary hand centrifuge.

Estimation of Quantities. The capillary is taken out of the microcone, and the capillary cone is pulled out of the capillary and transferred back onto the carrier in the moist chamber. Microscopic inspection with reflected light will show a clump of orange precipitate in the point of the capillary cone. The volume may be roughly estimated with the use of the micrometer scale.

Separation of Solution and Precipitate. The point of the micropipet is inserted into the clear liquid with the opening of the pipet close to the precipitate, and then the solution is taken up into the pipet by the slow application of suction. This operation may be observed with reflected light, using a white background. A nearly quantitative removal of the solution can be accomplished without difficulty and without disturbing the precipitate. The filtrate is rejected and the pipet is cleaned.

Washing the Precipitate, Measuring the Wash Liquid. A volume of 0.02 cu. mm. of the ammonium chloride–hydro-

Figure 7. Treatment with Hydrogen Sulfide

FIGURE 8 (*left*). CAPILLARY CONE IN MICROCONE FOR CENTRIFUGING
FIGURE 9 (*right*). HEATING OR PRESERVING SOLUTIONS IN CAPILLARY CONE

hloric acid solution is taken up from reagent container *C* Figure 2) and transferred to the precipitate in the capillary one. The precipitate may be stirred up with the use of a ne glass thread operated with the manipulator. Then the apillary cone is again removed from the moist chamber, inerted into a wide capillary open at both ends, placed in a icrocone (Figure 8), and centrifuged. Inserting the cone nto the capillary not only facilitates handling, but also reards evaporation of the solution in the capillary cone. After eturning the capillary cone to the moist chamber, the posiion of the meniscus of the wash liquid is determined by measring with the micrometer scale the distance between the eniscus and the point of the cone. This position of the eniscus corresponds to 0.02 cu. mm. of wash liquid. After emoval of the first portion of the ammonium chloride–hydrohloric acid solution, the second portion is added without preminary estimation of its volume in the reagent container by imply filling up to the 0.02-cu. mm. mark of the capillary cone.

STARTING ANOTHER SET OF PROCEDURES. When the washg of the sulfide precipitate is complete, the capillary carrier removed from the moist chamber. The capillary cone coning the sulfide precipitate is transferred to another carrier lready equipped with an empty capillary cone and two regent containers, one holding sodium sulfide solution and the ther containing dilute sulfuric acid. These reagents are to be sed for the separation of the copper and arsenic groups. fter placing the new capillary carrier in the moist chamber, e sulfide precipitate is treated with 0.01 cu. mm. of the soium sulfide solution.

HEATING AND PRESERVING SOLUTIONS IN CAPILLARY CONES. he capillary cone is placed in a capillary containing a small olume of water in the tip of its sealed end, *A* (Figure 9). hen the open end of the capillary is fused shut, and the capilry is placed in water at 70° C. After 5 minutes it is taken ut of the water bath, transferred to a microcone, and centrifuged with end *A* down. A tiny speck of black precipitate collects in the point of the capillary cone and can be seen with the unaided eye. Solutions may be kept in capillary cones for days without evaporation taking place, if the cone is sealed in a capillary as shown in Figure 9.

The separation of the sodium sulfide extract from the bismuth sulfide and the precipitation of the antimony sulfide from the extract with dilute sulfuric acid are performed with the use of procedures described above.

In an actual experiment with 0.08 μg. of antimony and 0.008 μg. of bismuth, the volume of the bismuth sulfide residue was estimated under the microscope to approximate that of a sphere of a diameter of 2 divisions of the micrometer scale. The volume of the mixed antimony and bismuth sulfides had been estimated as corresponding to a sphere of a diameter of 4 divisions of the same scale. Considering the observation that equal quantities of different metals give sulfide precipitates of approximately identical volumes (*2*), it was derived that the concentrations of antimony and bismuth in the original solution stood in the ratio of 1 to 7, which is in satisfactory agreement with the ratio in which they were given.

In another experiment using the proposed technic 0.01 μg. of silver was precipitated as chloride; the precipitate was washed repeatedly and could finally be recrystallized from ammonia furnishing crystals, the form of which was recognizable under the microscope with the use of a magnification of 1000 ×.

The working technic described permits performance of analytical operations, in which concentrations and volumes of the various solutions are specified in a precise and controlled manner on a microgram scale as in macroanalysis. The operations are rather time-consuming at the present stage of development, but the technic has the merit of giving convincing results with the use of chemical procedures familiar to every analyst. Finally, it seems valuable to know that with such small quantities of material the reactions of analytical chemistry take place in the usual way. This knowledge should inspire increased confidence in the results of milligram procedures.

Acknowledgment

The author is greatly indebted to Robert Chambers and his co-workers, C. G. Grand and M. J. Kopac, for advice and for instruction in the use of the micromanipulator and the injection apparatus.

Literature Cited

(1) Benedetti-Pichler, A. A., IND. ENG. CHEM., Anal. Ed., 9, 149 (1937).
(2) Benedetti-Pichler, A. A., and Spikes, W. F., "Introduction to the Microtechnique of Inorganic Qualitative Analysis," pp. 26, 36, and 139, Douglaston, N. Y., Microchemical Service, 1935.
(3) *Ibid.*, p. 1, footnote 1.
(4) Chambers, R., in McKlung's "Handbook of Microscopical Technique," New York, P. B. Hoeber, 1929.
(5) Chambers, R., Kopac, M. J., and Grand, C. G., IND. ENG. CHEM., Anal. Ed., 9, 143 (1937).
(6) Emich, F., in "Abderhaldens Handbuch der biologischen Arbeitsmethoden," Abt. I, Teil 3, p. 278, Vienna and Berlin, Urban and Schwarzenberg, 1921.
(7) Emich, F., *Monatsh. Chem.*, 22, 670 (1901); 23, 76 (1902).
(8) Emich, F., *Z. anal. Chem.*, 54, 493 (1915); 56, 10 (1917).
(9) Howland, R. B., and Belkin, M., "Manual of Micrurgy," New York, New York University Press Book Store, 1931.
(10) Hudson, C. L., and Mudd, S., *J. Immunology*, 28, 311 (1935).
(11) Richards, A. N., Bordley, J., III, and Walker, A. M., *J. Biol. Chem.*, 101, 179 (1933).
(12) Richards, A. N., and Walker, A. M., *Ibid.*, 87, 479 (1930).
(13) Titus, R. N., and Gray, H. Le B., IND. ENG. CHEM., Anal. Ed., 2, 368 (1930).

RECEIVED June 5, 1937. Presented before the Microchemical Section at the 93rd Meeting of the American Chemical Society, Chapel Hill, N. C., April 12 to 15, 1937.

Determination of Lead in Biological Materials

Comparison of Spectrographic, Dithizone, and *s*-Diphenylcarbazide Methods

JACOB CHOLAK, DONALD M. HUBBARD, ROBERT R. McNARY, AND ROBERT V. STORY
Kettering Laboratory of Applied Physiology, University of Cincinnati, Cincinnati, Ohio

IN THE COURSE of investigations of the extent and significance of human lead absorption and excretion (*7–12*) three distinct analytical methods have been employed in this laboratory. The earliest (referred to here as the carbazide method) consisting of numerous time-consuming chemical separations and a final estimation of lead colorimetrically by means of *s*-diphenylcarbazide (*10*), was known to yield low results (*9, 12*). A spectrographic method requiring few manipulations (*2, 3*) provided a more satisfactory means for dealing with minute quantities of lead and has been used extensively in the past few years. The desirability of supplementing the latter method with a chemical one of corresponding sensitivity and accuracy led to an intensive study of current methods depending on the estimation of lead by means of dithizone, diphenylthiocarbazone (*1, 4, 5, 14–17*). The method finally adopted (*6*), a modification of the "mixed color" method of Clifford and Wichmann (*4*), has proved very satisfactory in the authors' hands.

Since the facilities of the laboratory permitted the simultaneous use of all three methods, data have accumulated which demonstrate the relative accuracies of the methods and indicate their individual field of usefulness in the determination of the lead content of various types of biological material.

It is the purpose of this paper to record illustrative data and to discuss their significance.

TABLE I. RESULTS ON SAMPLES WITH ADDED KNOWN AMOUNTS OF LEAD

Lead Added	Lead Recovered: Spectrographic[a]		Dithizone[a]		Carbazide	
Mg.	*Mg.*	*Mg.*	*Mg.*	*Mg.*	*Mg.*	*Mg.*
Nil	Trace	Trace	Nil	Nil	Nil	Nil
0.030	0.022	0.024	0.035	0.026	Nil	Nil
0.060	0.054	0.050	0.070	0.055	Nil	Nil
0.090	0.083	0.095	0.095	0.095	0.03	0.02
0.130	0.124	0.130	0.125	0.135	0.07	0.06
0.170	0.164	0.160	0.160	0.165	0.11	0.09
0.210	0.184	0.200	0.210	0.195	0.13	0.13
0.310	0.294	0.320	0.300	0.305	0.24	0.24
0.440	0.470	0.460	0.410	0.425	0.37	0.35
0.620	0.620	0.600	0.620	0.610	0.48	0.50

[a] In practice the results would be expressed to the second place, since the quantities of lead usually encountered are such that the third figure becomes insignificant. These results were calculated from amounts found in 1/10 aliquots.

Procedure

In comparative studies of the three methods, materials commonly handled in the laboratory, such as urine, feces, mixed food samples, and tissues obtained from human necropsies, were used. The methods of preparing samples for analysis were as previously described (*2, 10*), except that some (especially feces and mixed food) were found to contain such large quantities of tin that metastannic acid was formed on treatment of the ash with nitric acid. To prevent this, the ashed materials were dissolved in hydrochloric acid and distilled water and the volumes of the clear solutions were adjusted to 250 cc. for mixed food samples and 100 cc. for fecal samples. When all three methods were employed in analyzing the same solution, the aliquots chosen for the spectrographic, dithizone, and carbazide method, respectively, were 2, 10, and 238 cc. for the mixed food samples (Table II), and 1, 5, and 94 cc. for fecal samples known to have a high lead content (Table III). In the case of normal fecal samples (Table IV), on which only the spectrographic and dithizone methods were used, the respective aliquots were 2 and 10 cc. The comparative results for the necropsy specimens (Table VI) were obtained with suitable aliquots from the properly adjusted solutions of the ashed materials (*2*).

Since past experience had shown the inadequacy of the carbazide method for the accurate estimation of the small quantities of lead likely to be present in 24-hour specimens of normal urine (*9, 12*), comparative results on such samples were obtained only with the dithizone and spectrographic methods. Two types of comparative data were obtained; (*a*) two 100-cc. samples were withdrawn from a larger volume of clear urine, for independent preparation and analysis by the two methods; (*b*) the remainder of the original sample was prepared as a whole, and quantities equivalent to 100 cc. and to 200 to 300 cc. of urine, respectively, were taken for analysis by the spectrographic and dithizone methods.

The study of the comparative recovery of added quantities of lead (Table I) was carried out with synthetic samples

TABLE II. FREQUENCY DISTRIBUTION FOR MIXED FOOD SAMPLES

(Fifty samples obtained by normal subject)

Lead	Spectrographic	Dithizone	Carbazide
Mg.			
0.00–0.049	..	..	2
0.05–0.099	..	..	2
0.10–0.149	4	4	8
0.15–0.199	4	..	5
0.20–0.249	7	8	8
0.25–0.299	10	8	9
0.30–0.349	5	10	7
0.35–0.399	8	7	3
0.40–0.449	6	6	5
0.45–0.499	3	3	..
0.50–0.549	2	..	1
0.55–0.599	..	3	..
0.60–0.649	1	1	..
0.65–0.699	..	..	..
Number of samples	50	50	50
Total lead found, mg.	15.42	16.41	12.30
Calculated mean	0.316 ± 0.011	0.334 ± 0.011	0.248 ± 0.011
Standard deviation	± 0.115	± 0.116	± 0.113
Differences between means:		Carbazide and spectrographic	0.068 ± 0.015
		Carbazide and dithizone	0.086 ± 0.015
		Spectrographic and dithizone	0.018 ± 0.015

TABLE III. FREQUENCY DISTRIBUTION FOR FECAL SAMPLES

(Fifty samples from a subject exposed to lead)

Lead (Daily)	Spectrographic	Dithizone	Carbazide
Mg.			
0.20–0.399	2	3	6
0.40–0.599	5	7	6
0.60–0.799	9	7	13
0.80–0.999	10	9	5
1.00–1.199	5	3	5
1.20–1.399	5	6	3
1.40–1.599	1	2	4
1.60–1.799	4	2	3
1.80–1.999	2	3	4
2.00–2.199	2	3	..
2.20–2.399	1	1	1
2.40–2.599	3	3	..
2.60–2.799	1	1	..
Number of samples	50	50	50
Total lead found, mg.	58.48	59.80	48.25
Calculated mean	1.184 ± 0.060	1.188 ± 0.062	0.976 ± 0.049
Standard deviation	± 0.625	± 0.646	± 0.517
Differences between means:		Carbazide and spectrographic	0.208 ± 0.077
		Carbazide and dithizone	0.212 ± 0.079
		Spectrographic and dithizone	0.004 ± 0.086

simulating ashed samples of urine. The use of synthetic samples permitted an accurate control of the lead content since the stock solution employed could be prepared free from lead (*2*). The strength of the stock solution was such that when known quantities of lead were added to 500-cc. portions and the mixture was diluted to 1000 cc. with distilled water, each 100 cc. represented the ash of 1 liter of average normal urine. Analyses were carried out in duplicate by each method following the complete procedure employed for samples of fresh urine (*3*, *6*, *10*). Aliquots corresponding to 100-cc. samples of urine were used for analysis by the dithizone and spectrographic methods and the equivalent of 1000 cc. of urine for the carbazide method.

Results

The comparative results obtained by the different methods in the analysis of the synthetic samples are listed in Table I. In Tables II and III are listed the frequencies of distribution, the calculated means with their probable errors, and the standard deviations from the means for the results on mixed food and fecal samples by all three methods. The differences between the means obtained by the different methods, the probable errors of these differences, and the total lead recovered in each case have also been recorded. The material employed represented fifty 24-hour fecal samples and a like number of mixed food samples. Each of the latter samples consisted of duplicates of all meals eaten during each 24 hours by a human subject under study.

The high lead findings in the fecal series in Table III are due to known conditions of lead exposure on the part of a human subject under observation. In Table IV are listed similar data for a series of normal fecal samples on which only the dithizone and spectrographic methods were employed. In Table V are recorded the results obtained by the dithizone and spectrographic methods on independent 100-cc. samples of the same urine and the results obtained by each method with aliquots from the prepared remaining sample, as well as the total volume of urine originally available. Table VI lists the comparative results for necropsy specimens from a suspected case of lead poisoning. The data are recorded not only to give the actual comparative results for each organ, but also to show the types and quantities of material and the lead ranges which can be conveniently handled by either method.

Discussion

The comparative findings in the analysis of synthetic samples containing known quantities of lead (Table I) show agreement for the dithizone and spectrographic results and substantiate the magnitude of the average loss occurring with the carbazide method (*9*). That this loss of approximately .07 mg. per sample also occurs in dealing with the usual run of samples is evident from inspection of the differences between the respective means recorded in Table II. The application of the carbazide method to the determination of larger quantities of lead (Table III) is likely to result in an increased loss as a consequence of the simultaneous carrying of a large number of samples through the numerous steps of the method. The maintenance of the average loss at a uniform low level requires careful attention to detail which is possible only when a few samples are analyzed at one time. Nevertheless the carbazide method is satisfactory in those cases in which the loss inherent in the method becomes negligible either as a consequence of the use of large samples or because of the high lead content of the material (*9*, *12*).

The close agreement between the findings for the dithizone and spectrographic methods is evident not only from the results listed in Tables I and VI but, most strikingly, from the comparative recoveries and from the differences between the means of the two sets of results recorded in Tables II, III, and IV. A statistical evaluation of the ratios of these differences to their probable errors indicates values of 1 or less, and offers a further proof of the similarity of the findings by the two methods (*13*).

The apparent discrepancies which may be observed in the results on samples of urine in which the lead levels lie between 0.01 and 0.02 mg. per 1000 cc. become understandable with a recognition of the possible errors of analysis by each method. The error in estimating concentrations of lead from 0.01 to 0.10 mg. per 1000 cc. of urine is ±0.01 mg. for the spectrographic method (*3*). Since all samples are adjusted so that each cubic centimeter of the final solution is equivalent to 10 cc. of the original urine, the relative error remains constant regardless of the size of sample employed (*3*). On the other hand, the relative error of analysis by the dithizone method varies with the size of the aliquot and equals that of the spectrographic method, for aliquots corresponding to 100 cc. of urine, but decreases as the aliquot is increased. The determination of the total quantity of lead from the analysis of an aliquot can therefore be attended by a relatively large error in both methods, especially in the extremely low lead ranges. While the use of larger aliquots in working with the dithizone method results in an increased analytical accuracy, the results, as is evident from Table V, are not significantly different from

Table IV. Frequency Distribution for Normal Feces

(Fifty samples from a normal subject)

Lead	Spectrographic	Dithizone
Mg.		
0.00–0.049	1	1
0.05–0.099	1	1
0.10–0.149	8	8
0.15–0.199	9	7
0.20–0.249	3	9
0.25–0.299	12	12
0.30–0.349	10	4
0.35–0.399	2	3
0.40–0.449	..	2
0.45–0.499	3	2
0.50–0.549	1	1
Number of samples	50	50
Total lead found, mg.	12.10	12.12
Calculated mean	0.252 ± 0.010	0.248 ± 0.010
Standard deviation	± 0.108	± 0.106
Difference between means:	0.004 ± 0.014	

Table V. Analysis of Urine

(Showing the reproducibility of results by each method)

Sample	Independent 100-Cc. Samples		Aliquots from Prepared Remainder	
	Spectrographic	Dithizone	Spectrographic	Dithizone
Ml.	*Mg.*	*Mg.*	*Mg.*	*Mg.*
1800	0.03	0.05	0.04	0.04+
1900	0.02	0.05	0.02	0.05
1650	0.08	0.08	0.08	0.07
930	0.04	0.04	0.04	0.04
1500	0.02	0.04	0.03	0.04+
2200	0.02	0.04	0.03	0.04
1040	0.07	0.08	0.06	0.07
1020	0.06	0.07	0.05	0.05
1300	0.01	0.04	0.01	0.03
930	0.05	0.05+	0.05	0.04
1200	0.05	0.06	0.06	0.06

Table VI. Analysis of Necropsy Specimens (Case R)

Tissue	Sample	Lead Found By spectrograph	Lead Found By dithizone
	Grams	*Mg.*	*Mg.*
Kidney	30.5	0.29	0.31
Liver (portion of left lobe)	38.9	1.17	1.20
Liver (portion under gall bladder)	38.9	1.15	1.20
Brain (fiber tracts—midbrain)	21.3	0.10	0.11
Brain (cellular—midbrain)	19.8	0.08	0.09
Spleen	37.1	0.20	0.18
Bone (femur)	105.6	3.10	3.10
Spicules (from medulla of rib)	2.2	0.015	0.025
Spicules (from medulla of femur)	1.7	0.010	0.010
Total lead		6.115	6.225

the results obtained with smaller aliquots. Moreover, since these variations in the analysis of low urinary lead concentrations (0.01 to 0.02 mg. per 1000 cc.) can hardly be of practical importance, either method can be considered satisfactory. The comparative data, therefore, indicate that the dithizone and spectrographic methods may be used with equal assurance as to the reliability of the results in the estimation of amounts of lead in excess of 1 gamma.

While the two methods are equally satisfactory for the analysis of the general run of samples, the spectrographic method must be considered superior in certain cases in which the quantity of lead is less than 1 gamma, as in the analysis of spinal fluid (where the available samples vary from 3 to 10 cc.), and other materials available only in small quantities. The superiority of the spectrographic method here is due to the following factors: the constancy of the relative error of analysis—0.02 gamma on the arc (*3*); the lack of need for blanks because of the use of specially purified reagents (*2*, *3*); the minimal number of manipulations; and the remarkable sensitivity of the spectrographic detection of lead (*3*). Conversely, the estimation of these minute quantities by the dithizone method is rendered uncertain partly because of the opportunities for contamination occasioned by the manipulative procedures, but principally because of the necessity for correcting the result by a "rack blank" which may be greater than the lead content of the material under analysis.

In dealing with such sensitive methods as the dithizone and spectrographic, it is necessary to take every possible precaution against lead losses and contaminations, especially when the total quantity of lead in the aliquot is of the order of 1 to 10 gamma. In general, losses are negligible and the most serious factor is contamination. This may occur from the use of improperly cleaned apparatus and from lead in dust-laden air. The lead contamination from the latter source may be reduced appreciably by the removal of dust from the air of the laboratory, and chance contamination in general may be ruled out for practical purposes by the analysis of duplicate samples when sufficient material is available.

Summary

Comparative data for determinations of lead in biological material by means of a spectrographic, a dithizone, and a chemical separatory (carbazide) method have been given. The specific field of usefulness of each method has been defined as follows:

In dealing with the general run of biological samples in which the quantity of lead present exceeds 1 gamma, the spectrographic or dithizone method may be used with equal assurance of the reliability of the results.

The spectrographic method is superior in dealing with quantities of lead less than 1 gamma.

The chemical separatory (carbazide) method is chiefly useful in the case of large samples, and is satisfactory when the lead content of the samples is such that the loss inherent in the method (approximately 0.07 mg. per sample) is insignificant in either a chemical or a physiological sense.

Literature Cited

(1) Assoc. Official Agr. Chem., Official and Tentative Methods 4th ed., 1935.
(2) Cholak, J., Ind. Eng. Chem., Anal. Ed., 7, 287 (1935).
(3) Cholak, J., *J. Am. Chem. Soc.*, 57, 104 (1935).
(4) Clifford, P. A., and Wichmann, H. J., *J. Assoc. Official Agr. Chem.*, 19, 130 (1936).
(5) Fischer, H., and Leopoldi, G., *Wiss. Veröffent Siemens-Konzern* 12, 44 (1933).
(6) Hubbard, D. M., Ind. Eng. Chem., Anal. Ed., 9, 493 (1937).
(7) Kehoe, R. A., Edgar, G., Thamann, F., and Sanders, L. W. *J. Am. Med. Assoc.*, 87, 2081 (1926).
(8) Kehoe, R. A., and Thamann, F., *Ibid.*, 92, 1418 (1929).
(9) Kehoe, R. A., Thamann, F., and Cholak, J., *Ibid.*, 104, 9((1935).
(10) Kehoe, R. A., Thamann, F., and Cholak, J., *J. Ind. Hyg.*, 15, 257–340 (1933).
(11) *Ibid.*, 16, 100 (1934).
(12) *Ibid.*, 18, 42 (1936).
(13) Pearl, R., "Introduction to Medical Biometry and Statistics," 2nd ed., p. 287, Philadelphia, W. B. Saunders and Co., 1930.
(14) Tompsett, S. L., and Anderson, A. B., *Biochem. J.*, 29, 1851 (1935).
(15) Wilkins, E. S., Jr., Willoughby, C. E., Kraemer, E. O., and Smith, F. L., 2nd, Ind. Eng. Chem., Anal. Ed., 7, 33 (1935).
(16) Willoughby, C. E., Wilkins, E. S., Jr., and Kraemer, E. O., *Ibid.*, 7, 285 (1935).
(17) Winter, O. B., Robinson, H. M., Lamb, F. W., and Miller, E. J., *Ibid.*, 7, 265 (1935).

Received July 16, 1937. Presented before the Microchemical Section at the 94th Meeting of the American Chemical Society, Rochester, N. Y., September 6 to 10, 1937.

An Inexpensive Microchemical Filter Crucible

A. J. BAILEY
Division of Forestry, University of Minnesota, St. Paul, Minn.

FILTRATION micromethods are numerous but often handicapped by special considerations in quantitative work. Hemmes' filtration procedure (*1*), drawing off liquid by filter paper, is only of qualitative value. Strzyzowski's glass funnel (*2*), Pregl's microfunnel (*3*), Pregl's filter stick (*4*), and Schwinger's suction filter (*3*) are instruments of distinct quantitative utility but in certain cases may be handicapped by the impossibility of wiping clean the interior of the funnel tube. Further, igniting may be impossible or difficult. Donau dishes (*5*) and similar commercial crucibles with a platinum-iridium sponge are excellent but expensive.

A simple, inexpensive, and easily made crucible that has given excellent results was made by heating the end of a Pyrex glass tube 10 mm. in outside diameter until the glass, through surface tension, formed a smooth orifice of approximately the shape shown in Figure 1. While still plastic, the end of the tube was flattened by pressing on an asbestos mat.

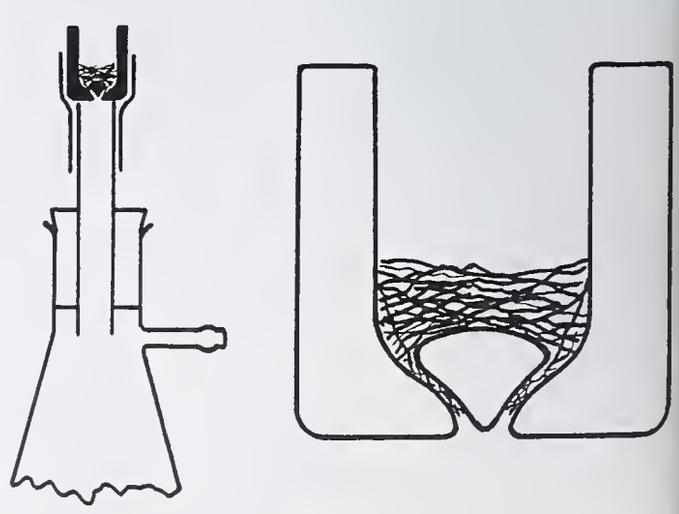

Figure 1

After cooling, the lower centimeter of the tube was cut off and the edges were fire-polished. Small "tear drops" of Pyrex glass were made approximately to fit the interior of the orifice. The final preparation of the crucible consisted in connecting it to a suction tube with a short section of heavy rubber tubing, and forming an asbestos mat above the tear drop. The tip of the tear drop should not extend below the bottom of the crucible; otherwise the filter mat would be disturbed when the crucible was set down.

Checked in analytical work by comparison with commercial platinum crucibles with a platinum-iridium sponge filter plate, it showed little difference in performance. It successfully withstood ignition, if heated gradually at first. Loss in weight was practically nil. The exterior could be easily cleaned by wiping, preventing possible retention of solid material apt to "creep" into the tube of a tube-type filter. Hygroscopic materials were easily transferred from the desiccator to a small weighing bottle in equilibrium with the atmosphere of the balance case. The total load was still less than half the capacity of a 20-gram microbalance. The weighing bottle had the further advantage of obviating the difficulty of obtaining constant weight (anhydrous surface, electrical charges?). Its general performance attested its value for analyses requiring a number of crucibles at one time or for use in class instruction.

Literature Cited

(1) Emich, F., "Microchemical Laboratory Manual," p. 25, New York, John Wiley & Sons, 1932.
(2) *Ibid.*, p. 28.
(3) *Ibid.*, p. 30.
(4) *Ibid.*, p. 68.
(5) *Ibid.*, p. 75.

RECEIVED June 9, 1937. Released for publication by courtesy of the Director, Agricultural Experiment Station, University of Minnesota.

Microdetermination of Organic Sulfur

WILLIAM SASCHEK, College of Physicians and Surgeons, Columbia University, New York, N. Y.

THE Pregl gravimetric method (*8*) of determining sulfur in organic compounds by catalytic oxidation in the spiral combustion tube occurs in two main operations: combustion of the substance and determination of the sulfuric acid formed.

The general advantage of this method is somewhat impaired by experimental difficulties encountered in the second part of the original procedure, which involves washing out the combustion tube, evaporating the collected wash liquid to a very small volume or to dryness before precipitation, and transferring the precipitate to a Neubauer filter crucible. If precipitation is done before evaporation, an evaporation ing of precipitated barium sulfate tends to form and adhere tenaciously to the wall of the vessel, causing difficulty in quantitative transfer. These difficulties have led to the application of various devices such as alternate washing with water and alcohol, use of a "feather," use of automatic transfer devices (*7*, *10*, *11*), or precipitation with a "celluloid sol" (*2*). All these devices for facilitating quantitative transfer of barium sulfate precipitate, which is inherently difficult, are inconvenient and include possible sources of error. The various open fusion and bomb fusion methods (*3*, *12*) tend to increase the possibilities of error, as they require precipitation of the small amounts of barium sulfate in the presence of proportionately large amounts of other salts. These conditions of high nitrate-ion concentration (anion most highly co-precipitated with barium sulfate), insufficient digestion, and the impossibility of reprecipitation are most favorable for extensive co-precipitation.

To circumvent difficulties connected with the quantitative transfer of barium sulfate, titrimetric methods of determining the sulfuric acid after the combustion have been recommended (*4*, *5*, *8*). These have only limited applicability to halogen-free and nitrogen-free substances, or are cumbersome and time-consuming.

Heller and Meyer (*6*) suggest transferring the barium sulfate after evaporation into a large crucible of 25-cc. capacity and drawing off the wash liquid by means of a porcelain filter stick (*9*), but fail to give sufficient detail.

During the past 7 years the following technic, which avoids many of the above difficulties, has been practiced and taught to students in this laboratory, and has, therefore, already

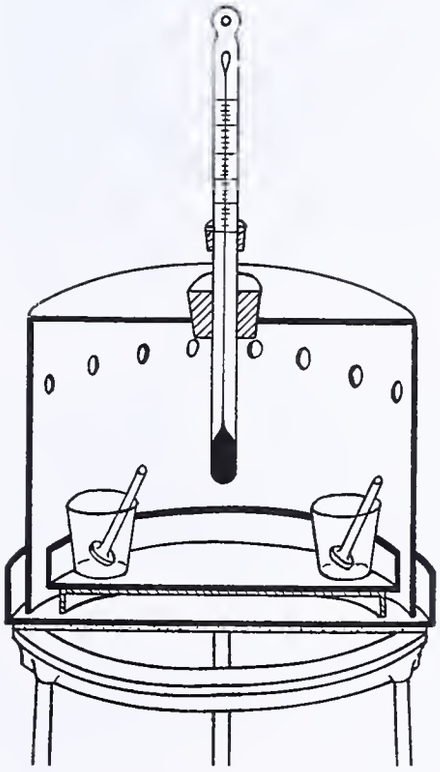

FIGURE 1

found its way into many other laboratories. As the necessity of transferring the barium sulfate precipitate from one vessel to another is eliminated, it is generally preferred to the Neubauer crucible technic.

Procedure

For precipitation a thin-walled porcelain crucible (preferably with black interior glazing) of about 15-cc. capacity (*1*) and a small porcelain filter stick (*9*) are used. The crucible should be cleaned of precipitate from previous analyses and rinsed with distilled water, the exterior wiped with a clean cloth. The filter stick may be cleaned by brushing off any adhering precipitate and then washed by sucking water

through it in both directions to rid the porous filter surface of precipitate as much as possible. Reverse washing is facilitated by the use of a suitable "adapter."

The crucible, containing the filter stick, should be dried at 150° to 200° C. for about 10 minutes. For this purpose an oven, which can be made easily and practically without expense from a tin can, is convenient and adequate; Figure 1 explains some of its details. An electric hot plate will also serve nicely as a heating base for the oven. The crucible is then placed on a piece of clean metal, covered, and allowed to cool. A metal cooling block (Figure 2), with glass cover for protection against dust, allows more secure handling of the crucible.

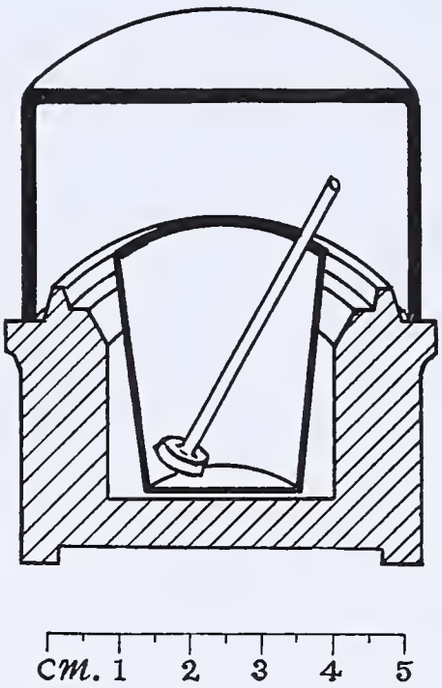

FIGURE 2

The size and form indicated have finally been evolved as a more convenient carrier for the boats and other small containers of analytical samples than the more clumsy glass hand desiccator of Pregl. The standard small metal block fits over the depression for the crucible (Figure 3).

After drying, the crucible should be handled with suitable (curved) metal forceps until after weighing. After about 15 to 20 minutes, when the crucible has cooled to room temperature, it is placed on the balance for about 5 to 10 minutes and then weighed to one-hundredth milligram. The filter stick is then removed from the crucible and kept in the balance until needed for filtration.

Combustion is carried out according to Pregl. The absorption liquid of the combustion tube is transferred quantitatively to the weighed crucible in the following manner:

The combustion tube is either clamped in a vertical position over the crucible, or held horizontally, and 1 to 2 cc. of water acidulated with hydrochloric acid (1 to 300) are blown into the wide end from a wash bottle fitted with a fine nozzle. For convenience a length of thin rubber tubing may be attached to the mouthpiece of the wash bottle. The combustion tube is rotated in such a manner as to wash the entire inside surface, and the wash liquid is then transferred to the crucible by holding the tube vertical with the capillary end in the crucible. Care must be taken not to lose wash liquid outside the crucible. Since the liquid flows out through the capillary rather slowly, expulsion may be hastened by blowing into the combustion tube through an air filter to which a length of flexible rubber tubing is attached for more convenient operation. This process is repeated four to five times to ensure complete rinsing. The amount of wash liquid employed should be so adjusted that the crucible will not become much more than about two-thirds filled.

For checking the completeness of the rinsing, another larger washing of the combustion tube may be collected in the protecting test tube and tested for sulfuric acid. If a precipitate of barium sulfate forms, it may be added to the crucible during subsequent filtration. It has been found, however, in several hundred sulfur determinations, that complete removal of the sulfuric acid produced in the combustion can easily be effected with three to four washings of 1 to 2 cc. as described. For precipitation of the barium sulfate the crucible is placed on a suitable steam bath, and about 0.5 cc. of 10 per cent barium chloride solution is added dropwise.

Any combustion residue in the boat is extracted with small portions of wash liquid and filtered into (the reduced contents of) the crucible. After about 15 minutes the solution is allowed to cool and filtration is carried out as described below. In case of very low percentages of sulfur, the volume should be reduced before filtration.

For filtration the filter stick is attached to a suitable suction device, and sufficient suction is applied so that the liquid filters at a rate of 1 to 2 drops per second. The precipitate is then washed in such a manner that the whole inside surface of the crucible is thoroughly moistened and rinsed three to four times with small portions of the acidulated water, making a total wash volume of about 3 cc. The filtrate should be collected and examined in a separate vessel of the suction device, and must be perfectly clear. Traces of barium sulfate may pass through a filter used for the first time; in this case the filtrate is poured back into the crucible and refiltered before washing. The filter is then detached and left in the crucible, which is wiped outside with a clean moist cloth and placed in the oven. With moist precipitate in the crucible, drying should be started below 100° C. to allow the moisture to be driven off slowly without spattering.

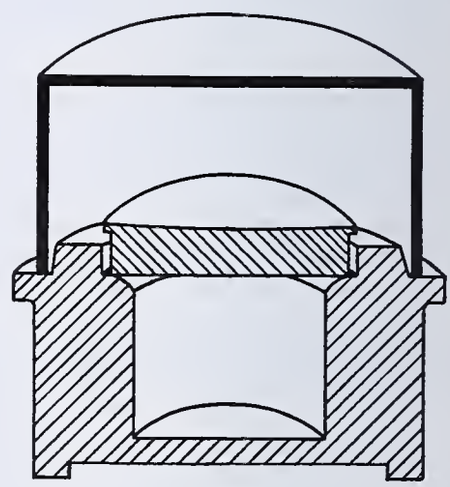

FIGURE 3

When thoroughly dried, the crucible is allowed to cool and is weighed as before. Many trials have shown that another washing with 2 to 3 cc. as before should not cause a decrease of weight of more than 0.01 to 0.02 mg.

Literature Cited

(1) Benedetti-Pichler, A., *Z. anal. Chem.*, **64**, 412 (1924).
(2) Eigenberger, E., *Z. angew. Chem.*, **68**, 22 (1926).
(3) Elek, A., and Hill, D. W., *J. Am. Chem. Soc.*, **55**, 3479 (1933).
(4) Friedrich, A., "Die Praxis der quantitativen organischen Mikroanalyse," 1st ed., Leipzig, F. Deuticke, 1933.
(5) Friedrich, A., and Watzlaweck, O., *Z. anal. Chem.*, **89**, 401 (1932).
(6) Heller, K., and Meyer, K., *Ibid.*, **71**, 117 (1927).
(7) Meixner, A., and Krocker, F., *Mikrochemie*, **5**, 128 (1927).
(8) Pregl-Roth, "Die quantitative organische Mikroanalyse," 4th ed., Berlin, Julius Springer, 1935.
(9) Schwarz-Bergkampf, E., *Z. anal. Chem.*, **69**, 327 (1926).
(10) Wagner, O., *Z. angew. Chem.*, **36**, 494 (1923).
(11) Wintersteiner, O., *Mikrochemie*, **2**, 14 (1924).
(12) Zahnd, H., and Clarke, H. T., *J. Am. Chem. Soc.*, **52**, 3275 (1930).

RECEIVED August 10, 1937.

Determination of Lead

A Photometric Dithizone Method as Applied to Certain Biological Material

DONALD M. HUBBARD, Kettering Laboratory of Applied Physiology, University of Cincinnati, Cincinnati, Ohio

THE introduction of dithizone by Fischer (*9*) and its later adaptation as a special reagent for the determination of minute quantities of lead by Fischer and Leopoldi (*10*), have led to its use in the development of numerous methods applicable to the determination of lead in biological materials (*1, 2, 8, 12, 13, 14, 15*). A study of these methods has resulted in the development of a photometric dithizone method, based essentially on the so-called "mixed color" method of Clifford and Wichmann (*8*) but incorporating ideas from Wilkins, Willoughby, Winter, and their co-workers (*13, 14, 15*). This method has proved reliable for the accurate evaluation of lead in almost every range of concentration and has been tested extensively by comparison with the spectrographic method (*4, 5*) used in this laboratory in recent years.

It is the purpose of this paper to present the details of this method and to discuss its application to the analysis of certain biological material.

Reagents

High-grade chemicals are used throughout the analysis to ensure a low initial lead content.

Whenever possible and feasible, reagents are further purified to reduce the lead content to a minimum, either by the aid of hydrogen sulfide or by distillation. These methods of purification as previously described (*4, 5*) are used for acids, distilled water, and ammonium citrate solution. Ammonia and chloroform are freshly distilled according to the technic of Clifford and Wichmann (*8*), and used chloroform containing dithizone and lead dithizonate in solution is reclaimed by the method of Biddle (*3*). Dithizone used for the final extraction is obtained in a state of exceptionally high purity (*2*).

The analysis of reagents commonly used is shown in Table I. No attempt is made to purify potassium cyanide. [According to Clifford (*7*), the presence of phosphates in sodium and potassium cyanides is harmful and purification of these salts by recrystallization is advisable. In the case of potassium cyanide the effect is negligible, in his experience, if the color is developed immediately after the addition of the ammonium cyanide reagent to the 1 per cent acid (*7*), as done in this laboratory.]

Glassware

All glassware (Pyrex) before use is washed thoroughly with hot 50 per cent nitric acid, followed by rinsing with distilled water to ensure the removal of lead which may be present as surface contamination.

The same procedure is used for silica or porcelain ware.

Apparatus

The neutral wedge photometer as described by Clifford and Wichmann (*8*) is used, with slight modifications.

LIGHT BOX. The light source consists of nine 32-candlepower, 12- to 16-volt, automobile headlight bulbs (Mazda "Tung Sol" T-1144) wired in series from a 122-volt alternating current circuit and arranged in a circle around two 2.5-cm. (1-inch) circular apertures in the interior of the box. The light is reflected from a piece of solid opal glass 15 × 15 cm. (6 × 6 inches) mounted about 2.5 cm. (1 inch) from the light source, so as to give diffuse reflected light.

EYEPIECE. Prism system and housing complete, from the Bausch & Lomb No. 3600 hemoglobinometer.

WEDGE. A neutral density wedge constructed of Bausch & Lomb smoked "C" neutral glass, length 150 mm., height 20 mm., thickness at thick end 8.0 mm. and at thin end not more than 0.5 mm. The wedge is compensated and reinforced by a wedge of clear glass of the same dimensions cemented to the wedge proper.

TABLE I. ANALYSIS OF REAGENTS COMMONLY USED IN DITHIZONE METHOD

Reagent	Lead Content *Gamma/liter*
Water (regular double-distilled, Barnstead still)	2
Water (triple-distilled, third distillation in Pyrex)	Trace[a]
HNO_3 concentrated	10–30
HNO_3 concentrated (triple-distilled, in quartz)	Trace[a]
HCl concentrated	10–30
HCl constant-boiling (triple-distilled, in quartz)	Trace[a]
H_2SO_4 concentrated	Ca. 800
KCN solution, 10 per cent W/V	80
Ammonium citrate solution, 40 per cent W/V	Trace[a]

[a] Less than 1 gamma.

CELLS. All cells are constructed of Pyrex glass with ground and polished fused-on windows of Corex glass. The windows are parallel and optically plane. No flux or cement is used in the construction. Vents are placed in the tops of the cells to permit of ready emptying and filling. Three cells are used having internal lengths of 12, 25, and 50 mm. (tolerance of ±0.1 mm.) for ranges of 0 to 10, 0 to 50, and 0 to 100 gamma of lead, respectively. The internal diameter for these cells is 14.5 mm. with a tolerance of ±0.5 mm.

FILTER. The spectral region employed (510 mu) is obtained by means of a Wratten compound filter (Eastman Kodak No. 45 and No. 58). The maximum transmission of this filter (10 per cent) occurs at 510 mu and it decreases sharply for regions on either side of the maximum, reaching a value of only 0.1 per cent at 478 and 550 mu.

Procedure

PREPARATION OF SAMPLES. Biological material other than mixed food samples and small samples of urine are prepared for analysis by the method described by Kehoe et al. (*11*). Mixed food samples and small quantities of urine are prepared by the method described by Cholak (*5*). In preparing samples of bone it has been found advisable to isolate the lead in the form of its sulfide as the first step, in order to eliminate the use of large amounts of ammonium citrate, otherwise required to keep the calcium in solution during the dithizone extraction.

The clear prepared solutions of the ashed materials or the solutions of the sulfides are then transferred to graduated glass-stoppered cylinders or flasks.

EXTRACTION 1. A suitable aliquot of the prepared sample is delivered by pipet into a properly graduated Squibb separatory funnel equipped with glass stopper held on by a rubber tie. (The aliquot chosen depends upon the extraneous salt and lead content of the sample, one-tenth of the prepared sample generally being satisfactory. Whenever possible the lead range selected should be 0 to 100 gamma in order that the greatest accuracy may be obtained in the determination of large amounts of lead.) Fifteen milliliters of purified ammonium citrate solution, equivalent to 6 grams of citric acid (monohydrate), and 2 drops of phenol red (Clark and Lubs) are next added to the solution, which is then partially neutralized to a distinct yellow color by the addition, dropwise, of concentrated redistilled ammonia, the funnel being swirled meanwhile for mixing. At this point 5 ml. of potassium cyanide solution (10 per cent W/V) are added and the pH of the mixture is adjusted to 7.5 by further addition of ammonia.

The solution is now ready for the initial extraction of lead with dithizone. The dithizone solution for this purpose is prepared by dissolving 30 mg. of the regular grade of dithizone (approximately 86 per cent pure) in 1 liter of freshly distilled or

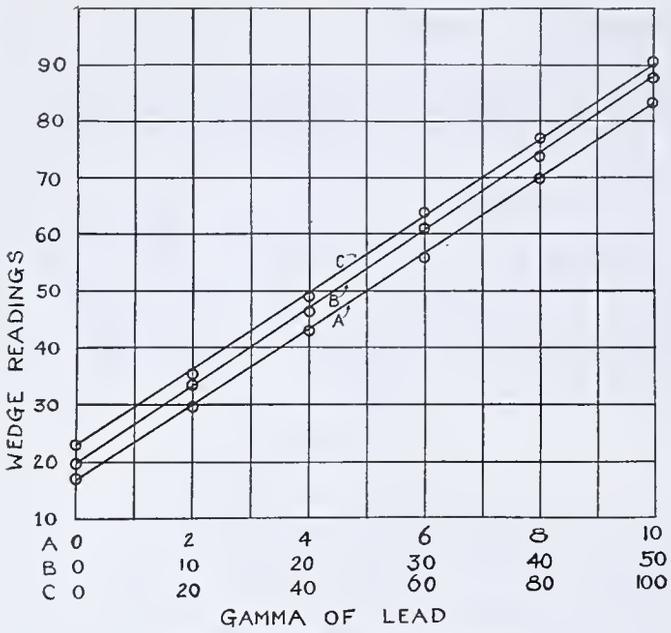

FIGURE 1. WORKING CURVES

reclaimed chloroform. The strength is such that 1.0 ml. of solution is equivalent approximately to 10 gamma of lead. (In order to remove traces of lead, the dithizone solution to be used is shaken with 1.0 per cent nitric acid immediately prior to use.) The extraction is made by adding 5-ml. portions of the dithizone solution until the color of added dithizone remains unchanged, the color ranging from a bright red for large amounts of lead, through purple, to the bluish green of the dithizone solution itself. The separatory funnel is shaken well after each 5-ml. addition, the chloroform layer being drawn off and saved in a second separatory funnel. To the collected lead-dithizone complex in the second separatory funnel 20 ml. of 1.0 per cent nitric acid are now added, the funnel is shaken well, and the chloroform lead-free phase is discarded, except for 1 ml.

EXTRACTION 2. To the contents remaining in the funnel, 2 drops of *m*-cresol purple (Clark and Lubs) are added and the pH of the aqueous phase is adjusted to 2 by the addition of weak ammonia (10 per cent). The funnel is shaken well and the phases are allowed to separate. If the chloroform, dithizone-containing phase shows no change of color, bismuth is absent (*14*) and the aqueous phase is readjusted to pH 7.5 by further addition of weak ammonia, one drop of phenol red being used as indicator. Again the funnel and contents are shaken and the phases permitted to separate. Inspection of the chloroform phase at this point will indicate whether the amount of lead present is more or less than 10 gamma.

The lead extraction is carried to completion by the repeated addition of 5-ml. portions of dithizone solution as in the first extraction, the number of portions used definitely fixing the lead range. The separated and collected chloroform fraction, containing all the lead as chloroform-soluble lead dithizonate plus uncombined dithizone, is then shaken with 40 ml. of 1.0 per cent nitric acid (nitric acid adjusted to specific gravity 1.40 should be used for dilution). The chloroform-dithizone phase is discarded and the last traces are driven out with pure chloroform. The nitric acid solution is now filtered into another clean funnel through a carefully cleaned pledget of cotton placed in the stem of a small funnel. (The pledget is washed with hot 50 per cent nitric acid followed by successive washing with hot redistilled water and with chloroform-saturated, 1.0 per cent, redistilled nitric acid.) The original separatory funnel is rinsed twice with 5-ml. portions of 1.0 per cent nitric acid, as above, and the rinsings are filtered. All the lead is now present in 50 ml. of 1.0 per cent chloroform-saturated nitric acid, ready for the final estimation.

If bismuth is present it seriously interferes and must be removed. If the amount is less than 0.5 mg. this is easily accomplished, according to Willoughby et al. (*14*), by extracting with dithizone at the point of extraction, when pH 2 is obtained (see first paragraph under Extraction 2). When large amounts of bismuth (greater than 0.5 mg.) are present a fresh aliquot must be taken from the remainder of the prepared sample, which has been freed from bismuth by a method described earlier (*11*), which step is necessary for occasional samples of feces.

EXTRACTION 3 (FINAL ESTIMATION OF LEAD). For the final estimation lead is again extracted by means of chloroform dithizone-containing solutions made up by using purified dithizone (*2*). To the 50 ml. of 1.0 per cent chloroform-saturated nitric acid containing the lead, 10 ml. of ammonia cyanide mixture are added (20 grams of potassium cyanide plus 150 ml. of redistilled concentrated ammonia, specific gravity 0.9, or equivalent, diluted to 1 liter with triple-distilled water). Upon shaking, a pH of approximately 9.5 is obtained. Next, 10 or 25 ml. of the proper dithizone solution are added and the mixture is shaken vigorously for 1 minute. Enough of the chloroform phase to fill the proper-sized cell is filtered through a Whatman No. 42 filter paper and the density of the water-free phase is determined by means of the wedge photometer. The linear displacement of the wedge, as read from a millimeter scale with vernier attachment, can be correlated to the lead content by comparison with the working curves shown in Figure 1.

The lead content of the sample is then determined by subtracting a blank designated as the "rack blank" run with each series of samples and by multiplying this result by the aliquot factor. In the case of samples requiring large amounts of acids for their preparation, it is also necessary to make a further correction by subtracting an additional blank representing the lead content of the acids used. This blank rarely exceeds 20 gamma.

The working curves are obtained by using 50-ml. portions of pure lead nitrate solutions in 1.0 per cent chloroform-saturated nitric acid, the procedure being essentially that given by Clifford and Wichmann (*8*). Concentrations of the various dithizone solutions and pertinent data regarding the quantity to be used as well as the size of cell employed are listed below.

Range *Gamma*	Dithizone Concn. *Mg./l.*	Volume Used *Ml.*	Cell Length *Mm.*
0–10	4	10	50
0–50	8	25	25
0–100	16	25	12

RECLAMATION OF CHLOROFORM. A modification of importance is the use for the preparation of the above dithizone solutions, of chloroform reclaimed by the method of Biddle (*3*) and given a special treatment in order to ensure the stability of the solutions. One liter is placed in a large separatory funnel and is shaken with 100 ml. of 0.5 per cent aqueous hydroxylamine hydrochloride solution neutralized with 1.0 per cent ammonia to pH 7.5, phenol red being used as indicator. Traces of water are removed by filtering through a dry fluted filter paper. Dithizone solutions prepared with chloroform so treated have been found to maintain their strength for at least 2 months. It has been found good practice to test the particular dithizone solution for stability each time that it is used in a series of analyses, by checking the wedge reading for zero lead concentration.

Analytical Results

In Table II are listed results obtained for known amounts of lead prepared from pure lead nitrate solutions and analyzed directly by the step of final estimation as outlined above.

TABLE II. DIRECT ANALYSIS OF PURE LEAD NITRATE SOLUTIONS (FINAL STEP ONLY)

Range Used *Gamma*	Lead Added *Gamma*	Lead Found *Gamma*
0–10	0.5	0.7
0–10	1.3	1.3
0–10	3.4	3.4
0–10	5.5	5.6
0–10	7.2	7.2
0–10	8.9	9.1
0–100	12.0	11.0
0–100	57.0	57.0
0–100	62.0	63.0
0–100	75.0	75.0
0–100	86.0	87.0
0–100	96.0	96.0

In Table III are listed results obtained by adding known amounts of lead to a suitable quantity of salt stock solution such as that described by Cholak (*5*). Ten samples in duplicate were made up as unknowns, each having a volume of 100 ml. and containing urine salts equivalent to 1 liter of normal urine (*5*). The solutions were analyzed with the same technic as that outlined for regular urine samples, an aliquot being taken equivalent to 100 ml. of urine.

A study of the reproducibility of results gave the findings

presented in Table IV. The data show results for like aliquots of the same prepared sample run at weekly intervals.

A large number of analytical results obtained from the analysis of various kinds of biological material has been collected during the past year. In many cases the samples could be analyzed simultaneously by the *s*-diphenylcarbazide (*11*) and spectrographic (*4,5*) methods, and these comparative results are reported elsewhere (*6*).

Discussion

The reliability of the method reported is clearly demonstrated by the results listed in Tables II, III, and IV. From Table II it is apparent that pure lead nitrate solutions of lead content 1 to 100 gamma can be analyzed with an error of 1 to 2 per cent except when the amount is less than 1 gamma or within the lower part of the range selected, where the percentage of error becomes somewhat greater. To obtain these values only the last step of the method has been used. Such accuracy, however, is not attained when samples are carried through the complete analytical procedure, as the results listed in Table III clearly show. This is due principally to the fact that the greater number of manipulations offers opportunities for losses and contamination.

Table III. Analysis of Synthetic Urine Samples (by Complete Procedure)

Range Used	Lead Added	Lead Found[a]
Gamma	*Mg.*	*Mg.*
0–10	Nil	Nil
0–10	Nil	Nil
0–10	0.030	0.035
0–10	0.030	0.026
0–50	0.060	0.055
0–10	0.060	0.070
0–50	0.090	0.095
0–50	0.090	0.095
0–50	0.130	0.125
0–50	0.130	0.135
0–50	0.170	0.160
0–50	0.170	0.165
0–50	0.210	0.210
0–50	0.210	0.195
0–50	0.310	0.305
0–50	0.310	0.300
0–50	0.440	0.410
0–50	0.440	0.425
0–100	0.620	0.620
0–100	0.620	0.610

[a] Calculated from result obtained with 1/10 aliquots.

Losses may occur when surface lead absorbed from ashed material is incompletely removed from the container used in ashing. Surface lead in glassware and the lead from dust-laden air which inevitably get into the sample are sources of contamination. The effect of the latter can be reduced considerably in the case of small samples by carrying out the complete procedure in a laboratory equipped with a dust-removal system.

For the estimation of amounts of lead below 10 gamma—amounts such as in practice may be present in 100 ml. of urine—the final accuracy depends upon the magnitude of the "rack blank" which is a variable, for reasons stated above, and must be determined in conjunction with each series of analyses. An average value of 0.8 gamma has been obtained, with deviations between 0.5 and 1.5 gamma.

Table IV. Reproducibility of Analytical Results

Time	Lead Found in Mixed Food	Lead Found in Feces
	Mg.	*Mg.*
Initial analysis	0.26	1.18
1 week later	0.28	1.24
2 weeks later	0.25	1.13
3 weeks later	0.25	1.18
4 weeks later	0.25	1.18

The method described above should prove highly satisfactory for the analysis of practically all types of material likely to be encountered. In the analysis of material such as the ash of mixed foods and feces containing considerable quantities of extraneous salts in addition to large amounts of tin, copper, aluminum, and manganese, the introduction of two extraction steps before the final estimation permits the isolation of lead as pure lead dithizonate in the final step. The role of the first extraction step is to remove complexes of such metals as tin, copper, and zinc and to separate the lead from extraneous salts. Because of the presence of these salts, the lead extraction at this step proceeds gradually and not quantitatively, making an accurate fixing of the range difficult. The second extraction is therefore useful not only for fixing the range definitely after the extraneous salts have been completely removed, but also for detecting the presence of bismuth and removing this element totally if it is present. Of the known interfering elements, thallium has thus far not been encountered, while bismuth can be readily identified and removed, as just stated. Stannous tin if present as such is oxidized and removed during the course of analysis. Although samples frequently contain large quantities of tin, numerous spectrographic tests of the final dithizone extract have shown it to be entirely free from this element.

The wedge photometer as described has given satisfaction. Wedge readings as obtained by the type of wedge used have been found to be a linear function of corresponding density measurements.

It is planned to continue experimental work, particularly in the lower range of lead concentration (0 to 10 gamma), the spectrophotometer being used to attain greater accuracy in density measurements. Of decided advantage will be the elimination of light filters, since this will simplify the application of the method to the estimation of other metallic dithizone complexes.

Summary

A photometric "mixed color" dithizone method has been applied to the analysis of certain biological materials. The introduction of three extraction steps permits the ready isolation of lead in a state of high purity. The first extraction step removes extraneous salts, the second eliminates bismuth, if present, and the third extraction step is used for the final estimation. Other metals usually found in biological material do not affect the results.

Reclaimed chloroform, as such, and the "specially treated" product have given complete satisfaction in the method described, thus eliminating waste.

The method is rapid. Prepared samples can be analyzed completely on the same day that they are received.

Literature Cited

(1) Allport, N. L., and Skrimshire, G. H., *Analyst*, 57, 440 (1932).
(2) Assoc. Official Agr. Chem., Official and Tentative Methods, 4th ed., p. 378 (1935).
(3) Biddle, D. A., Ind. Eng. Chem., Anal. Ed., 8, 99 (1936).
(4) Cholak, J., *J. Am. Chem. Soc.*, 57, 104 (1935).
(5) Cholak, J., Ind. Eng. Chem., Anal. Ed., 7, 287 (1935).
(6) Cholak, J., Hubbard, D. M., McNary, R. R., Story, R. V., *Ibid.*, 9, 488 (1937).
(7) Clifford P. A., *J. Assoc. Official Agr. Chem.*, 20, 191 (1937).
(8) Clifford, P. A., and Wichmann, H. J., *Ibid.*, 19, 130–56 (1936).
(9) Fischer, H., *Wiss. Veröffent. Siemens-Konzern*, 4, Heft 2, 158 (1925); *Z. angew. Chem.*, 42, 1025 (1929).
(10) Fischer, H., and Leopoldi, G., *Wiss. Veröffent. Siemens-Konzern*, 12, Heft 1, 44 (1933).
(11) Kehoe, R. A., Thamann, F., Cholak, J., *J. Ind. Hyg.*, 15, 257 (1933).
(12) Tompsett, S. L., and Anderson, A. B., *Biochem. J.*, 29, 1851 (1935).
(13) Wilkins, E. S., Jr., Willoughby, C. E., Kraemer, E. O., and Smith, F. L., 2nd, Ind. Eng. Chem., Anal. Ed., 7, 33 (1935).
(14) Willoughby, C. E., Wilkins, E. S., Jr., and Kraemer, E. O., *Ibid.*, 7, 285 (1935).
(15) Winter, O. B., Robinson, H. M., Lamb, F. W., and Miller, E. J., *Ibid.*, 7, 265 (1935).

Received July 16, 1937. Presented before the Microchemical Section at the 94th Meeting of the American Chemical Society, Rochester, N. Y., September 6 to 10, 1937.

Angular Constants of Microcrystalline Profiles and Silhouettes

In the Conclusive Identification of Substances

ARTHUR CURTIS SHEAD, University of Oklahoma, Norman, Okla.

ANGULAR measurements on such facies of crystals as fortuitously presented themselves have been made sporadically for the last three-quarters of a century by mineralogists, botanists, and a few chemists. Drawings and photomicrographs illustrative of tests and purported tests have also circulated in the literature since the time of Wormley (*18*). The value of these, for comparative purposes, has been unquestioned but so preponderant were the nondiagnostic glasses, isotropic substances, rectangular prism or pinacoidal facies, regular hexagonal aspects, crystallites (*15*), and the like, that the existence of diagnostic crystals with characteristic, mathematically expressible angular constants was almost overlooked. Such meager quantitative data of this nature as were submitted were discredited by petrographic crystallographers, familiar with the outlines of random rock cross sections, and by other mineralogists, who while recognizing the law of constancy of interfacial angles on crystals, failed to comprehend fully that any observed angle on a crystal must necessarily be some function of a corresponding interfacial angle, and as such can itself serve directly as a constant under proper conditions. The dearth of this sort of data is proof of the oversight.

This discrepancy was noted by Shead (*12*) who proposed a corollary to the law mentioned with the purpose of extending its usefulness to practical analytical chemistry. This modification may be thus stated: Any functional angle of an interfacial angle on a crystal must be also a constant. This functional angle is called a "profile" or "silhouette" angle to emphasize its relationship with the actual interfacial angle as being the same as that between the "shadow and substance" of, for example, the human face or form. As distinguished from its profile or silhouette angle the profile or silhouette itself is a flat crystal of such a tubular habit as to exhibit sensible dimensions in two directions with subordinate extension in the third. Such a thin crystal, settling through a solution, will generally assume a constant position upon a microscopic slide or other flat surface, under the influence of gravity. Here any characteristic angles it may have can be measured in profile by recognized methods. Microscopic inspection will usually disclose individual crystals in orientation suitable for accurate measurement even in cases where dry (sublimation) preparational methods have been employed.

The profile or silhouette angle as a constant is invaluable to the microchemist because frequently the actual interfacial angle cannot be readily determined on microcrystals because of unfavorable orientation and the difficulty of manipulation to a more suitable position on account of minute size, whereas its function, the profile angle, can be directly measured on crystals of the habit above considered. In such cases, the functional angle may be directly employed as data, whereas the corresponding interfacial angle would have to be laboriously calculated before it could serve that purpose. Such constants are indispensable in characterizing substances that decompose or sublime before the more familiar melting or boiling points are attained. Furthermore, the silhouette or profile angle is a unique constant in that it can be photographed, preserved, and exhibited, especially in important forensic cases, to a jury that can usually appreciate simple geometrical differences and varying angular magnitudes.

Illustrations in Figure 1 depict the value of photomicrographs of single crystals, when of adequate size and perfection, as an ocular demonstration of visible quantitative data. A closely allied application is the detection of local variation in a lot of crystals that show chemical purity on the average. In such cases the condition is revealed by inconsistency of angular measurements on individual crystals taken from different parts of the lot. This lack of uniformity has been noted especially in C. P. acid potassium tartrate and is explained as localizations of normal potassium tartrate or tartaric acid in individual cream of tartar crystals. Such circumstances may explain in part some reported difficulties in accurately duplicating angular measurements.

Crystals suitable for profile angular constant measurement are obtained by a combination of proper preparational methods and discriminating selection of material that is adequate in perfection, simplicity, and orientation. The individual crystal should be isolated from all other specimens so as to lie flat, from its tabular habit, on the supporting microscope slide, in order that its whole periphery may be simultaneously brought to focus at moderate magnifications; it should approach the perfection and simplicity of a line drawing, and it should preferably exhibit the statistically common geometrical form of a parallelogram or hexagon. A casual survey of illustrations to be found in the literature will disclose that these specifications are not unduly rigid.

Preparational Methods

Preparational methods for the production of crystals suitable for profile angular measurements necessarily vary with the physical and chemical properties of the different substances concerned, and consequently must be classified accordingly. Owing to the profound effect of speed of formation upon the character of the resulting crystals, methods may be roughly classified as rapid or slow according to whether production requires but a few seconds or takes place over an extended period of time. As Walcott (*17*) concludes, crystals growing at a rapid rate have a tendency to develop as simple forms while complex forms result as a rule from long-continued operations. Sometimes a rapid method produces nondiagnostic crystallites where a slower one provides optimum results. With other substances a rapid process produces the desired simplicity, where a slower one furnishes diagnostic but complex forms. In still other cases method seems to have little influence on results. In all cases frequent inspection of work in progress and the judgment of the operator are invaluable in determining the proper course to pursue.

Crystallization of substances, 0.5 to 5.0 per cent soluble in water, a typical rapid procedure, is ordinarily effected by a combination of sudden cooling and violent agitation of a hot solution at such concentration as will be definitely supersaturated at room temperature. The cooling is usually produced by simply holding the container under the tap while the violent agitation is effected by striking it forcefully against the hand or some wooden object. If nondiagnostic crystallites

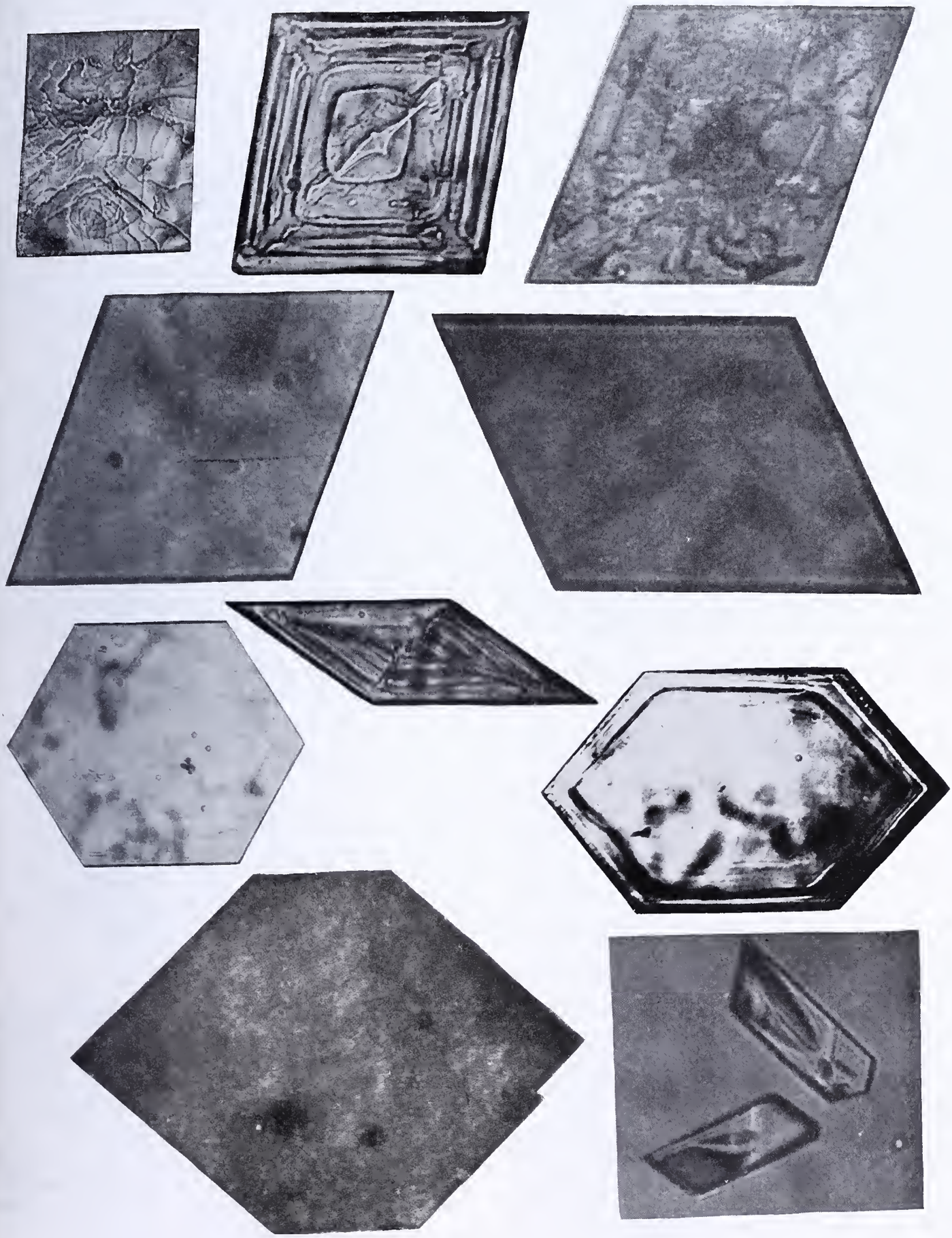

FIGURE 1. PHOTOMICROGRAPHS

Upper row: trional, potassium chlorate, 2,4,6-tribromophenol bromide
Second row: mercuric bromide, mercuric iodide
Third row: veronal, aspirin, acetanilide
Lower row: picric acid, morphine

form under this treatment, milder measures may be adopted. After suitable crystals are formed, these are suspended in their mother liquor, poured upon a glass microscope slide, and allowed to subside thereon. After a short time for settling, supernatant liquid is drained off at a low pouring angle, and the excess is gently blotted away from the crystals with a piece of filter paper held taut between the fingers.

Check results may be obtained by a slower method, the spontaneous evaporation of the solvent water from the saturated solution or mother liquor resulting from the preceding operation. This solution, placed upon a glass slide, is seeded with some of the separated solute, which appears to induce more perfect and larger crystals upon evaporation to dryness in proportion as the seed particles are fewer in number. Unless this process of what may be termed "autoseeding" of the saturated solution be carried out, the spontaneous evaporation of the solvent is likely to leave the solute in featureless films of little value for quantitative angular measurement. Frequently the crystallizing power of the solute is so great that all will be incorporated in crystals, leaving a clear field when the evaporation of the solvent is complete. But if too much featureless debris tends to form, it may be advisable to stop crystallization, when it is seen that optimum results are obtained, by pouring off the excess mother liquor and blotting it away from the crystals with filter paper, as described above. This slower method is likely to produce more complex forms than the preceding faster one.

Crystallization of substances, soluble in hot water but insoluble in the cold, may perhaps best be accomplished by an initial evaporation of the hot solution to incipient crystallization, followed by a period of slow spontaneous cooling to room temperature, with subsequent manipulation of the resultant crystals, as previously described. 2, 4, 6-Tribromophenol bromide (Figure 1) prepared by the action of excess warm bromine water on a hot solution of phenol, salicylic acid, or other allied compound, is perhaps representative of the solubility group under discussion.

A small 7.5-cm. (3-inch) test tube full (4 ml.) of this tribromophenol bromide (m. p. 96° C.) solution, hot and approximately saturated in the presence of excess (colored) bromine water, is supported in the mouth of an Erlenmeyer flask by a cork segmented for the escape of steam. The test tube is bathed exteriorly by the water contents of the flask. This system is placed on a wire gauze over a hot plate (105° C.) so as to maintain a temperature below the melting point of the compound under treatment. Evaporation is continued (overnight) until sufficient solvent has been removed to permit initial separation of solute from the hot solution. The system is then set aside to cool spontaneously at a rate which is controlled by the heat capacity of the water in the Erlenmeyer flask that served initially as a water or steam bath. After cooling is complete, the resulting crystals are removed to a microscope slide and manipulated as detailed above. Trichites result if the solute be allowed to melt. Blotting of the crystals is not required in this group.

Crystallization of substances by microsublimation has been discussed by Chamot and Mason (*4*), Emich (*5*), and others, as well as by Hoffman and Johnson (*8*) and Shead (*13*). Shead concluded that conditions of temperature upon the condensing surface and time appear to be the critical factors controlling the production of crystals that are optimum for profile angle measurement, by the process of microsublimation. Maximum periods of time, during which the initially deposited material reworks by repeated cycles of vaporization and condensation, are conducive of perfection of crystal form. Temperatures on the condensing surface that approach as closely as possible to the sublimation temperatures defined and tabulated by Hoffman and Johnson (*8*) are apt

Table I. Angular Constants of Microcrystalline Profiles and Silhouettes

Substance	Parallelogram Acute angle	Parallelogram Obtuse angle	Preparational Method
Veronal	36.4°	144.4°	From hot water
o-Nitrobenzoic acid	39.5°	...	Spontaneous evaporation of C_2H_5OH or C_6H_6 solution (*6*)
$Ag_2Cr_2O_7$ (43°)	44.5°	136.3°	Ag + CrO_4 + evaporation of dilute HNO_3 solution (*2, 3, 12*)
Urea nitrate	49.8°	130.2°	From hot 1:1 HNO_3 solution (*12*)
Asparagin	50°42′	129°18′	Spontaneous evaporation of C_2H_5OH solution (*19*)
$Ba(SbO{\cdot}C_4H_4O_6)_2{\cdot}2H_2O$	52°	128°	Tartar emetic + Ba^{++} + H_2O (*14*)
$CaSO_4{\cdot}2HOH$	52°29′	127°31′	Natural: 2 per cent H_2SO_4 + Ca^{++} in H_2O (*7*)
Urotropin + $HgCl_2$	54°	125°	Special (*1*)
Phenobarbital	56.7°	123.3°	From hot water solution
$CaC_4H_4O_6{\cdot}4H_2O$	57°30′	122°30′	Ca^{++} + $H_2C_4H_4O_6{\cdot}H_2O$ solution (*11*)
$Ag_2C_2O_4$	58°	122°	From hot water (*3*)
m-Nitrophenol	58°	...	From hot water or hot C_6H_6 (*6*)
p-Dichlorobenzene	59°	121°	Sublimation at 50° C. (*12*)
Morphine	59.1°	120.9°	Sublimation at 190° C. (*13*)
p-Chloronitrobenzene	60°	...	Evaporation of C_2H_5OH, C_6H_6, or CCl_4 solution (*6*)
o-Nitrobenzyl alcohol	62°	...	Evaporation of C_2H_5OH or C_6H_6 solution (*6*)
Mercuric iodide	64.6°	115.4°	Sublimation at 100–110° C. (*12*)
Antipyrene	66°?	...	Salted from water solution by NaCl (*16*)
Mercuric bromide	69°	111°	Spontaneous cooling of hot water solution
Tribromophenol bromide	69.7°	110.3°	Sublimation at 85–90° C. and from hot water (*13*)
p-Nitrobenzyl alcohol	75°	...	Evaporation of C_2H_5OH or C_6H_6 solution (*6*)
p-Nitrophenol	77°	...	From fusion (*6*)
$KClO_3$	79.8°	100.3°	From hot water. Quenched
KNO_3	79.8°	99.4°	Spontaneous evaporation of water solution (*12, 19*)
o-Nitrophenol	80°	...	From hot C_2H_5OH or C_6H_6 solution (*6*)
p-Nitrotoluene	80°	...	From hot C_2H_5OH or C_6H_6 solution (*6*)
Urea nitrate (82°)	81.8°	98.2°	From hot 1:1 HNO_3 solution (*5, 12*)
Antipyreneferrocyanide	82°	...	Acid solutions of antipyrene + ferrocyanide. Cold (*16*)
$HgC_2H_3O_2$	83.5°	97°	From hot water
Sulfonal	85°	95°	From hot water. Quenched
o-Chloronitrobenzene	85°	...	Evaporation of C_2H_5OH or C_6H_6 solutions (*6*)
m-Nitrobenzoic acid	...	...	From hot water or acetone solutions (*6*)
p-Bromonitrobenzene	86°	...	Evaporation of C_2H_5OH or C_6H_6 solutions (*6*)
Trional	86.5°	93.5°	From hot water. Quenched
Picric acid	87°	93°	From hot water or sublimed at 100° C. (*13*)
	Hexagon: Two apex angles	Hexagon: Four nonapex angles	
m-Nitroaniline	80°	...	From hot C_2H_5OH or CCl_4 solution (*6*)
Urea nitrate	81.8°	139.4°	From hot 1 : 1 HNO_3 solution
Picric acid	87°	136.7°	From hot water or sublimed at 100° C.
$Ag_2Cr_2O_7$	87.4°	136.3°	Evaporation of hot 1:1 HNO_3 solution
p-Nitrobenzoic acid	...	135°	From hot C_6H_6 (*6*)
$AgC_2H_3O_2$	90°	...	From hot water (*4*)
Sulfonal	95°	132.5°	From hot water
$HgC_2H_3O_2$ (100°)	97°	131.5°	From hot water
Urea nitrate	99.5°	130.2°	From hot 1:1 HNO_3 solution (*12*)
Acetanilide	99.5°	130.2°	From hot water. Quenched
m-Nitroaniline	100°	...	From hot C_2H_5OH or CCl_4 solution (*6*)
Picric acid	108.5°?	126.3°?	From hot water or sublimation at 100° C. (*13*)
Tribromophenol bromide	110.3°	124.5°	Sublimation at 85–90° C. (*13*)
Phenobarbital	113.4°	123.3°	From hot water
Morphine	118.2°	120.9°	Sublimation at 190° C. (*12*)
Aspirin	119.7°	120.3°	From hot water. Quenched
Phenobarbital	122.1°	119.5°	From hot water. Quenched
Antipyrene	128°	116°	Salted from water solution by NaCl (*16*)
p-Nitroaniline	125°	...	From hot C_2H_5OH, C_6H_6, or CCl_4 solution (*6*)

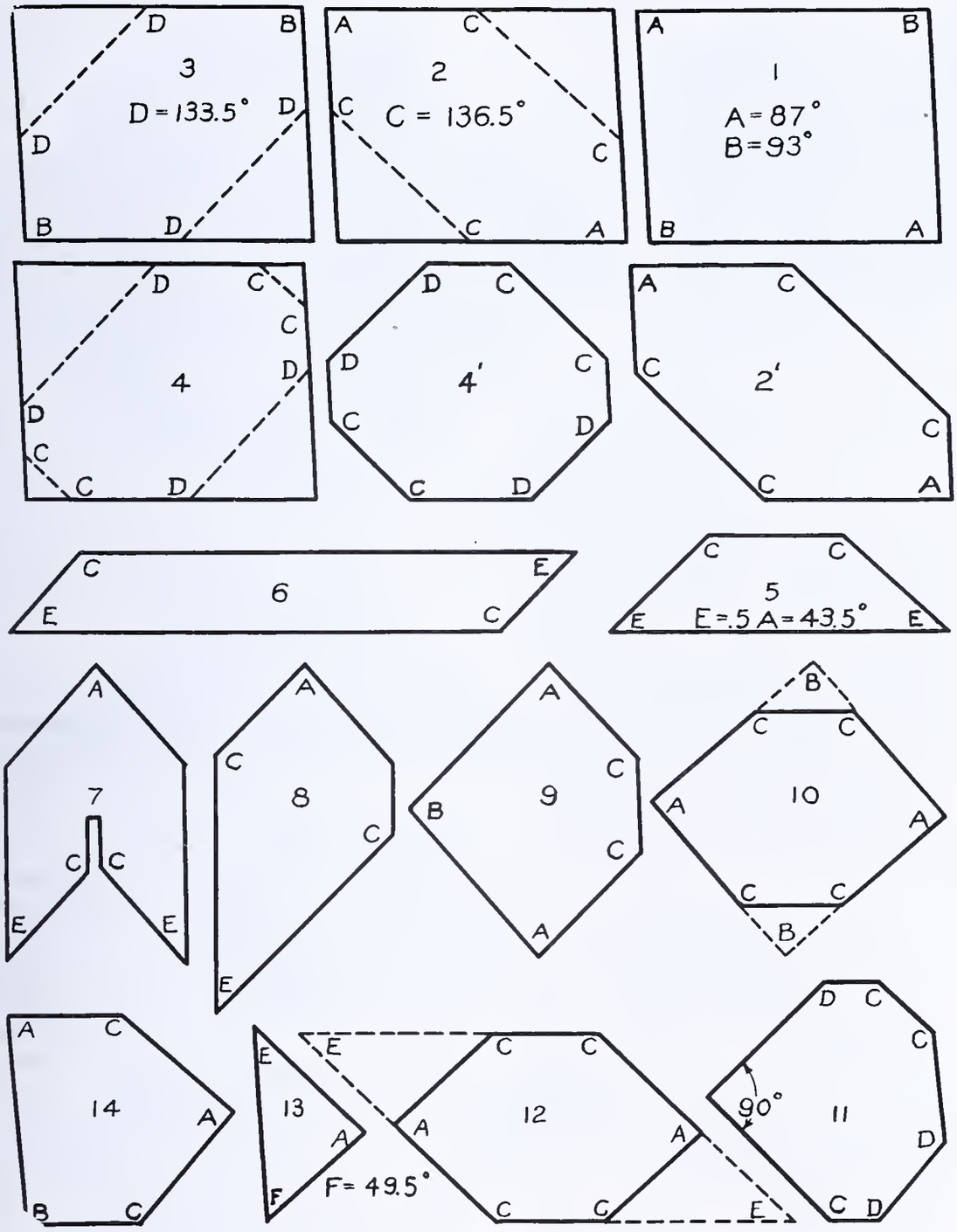

FIGURE 2

to be optimum. Regulation of these temperatures by control of heat, rather than by application of cooling water to the condensing surfaces, is recommended, especially should initial condensation take place at optimum temperature. Finally, minimum amounts of material sublimed are conducive to the formation of individual crystals suitable for profile angle measurement. Fortunately, direct inspection of the sublimate from time to time permits suitable modifications of the procedure as such become necessary.

Apparatus for Microsublimation

Apparatus for microsublimation at atmospheric pressure has also been described by Shead (*13*) who uses a sublimation cell consisting of a metallic ring for the walls, closed below by metallic foil for the floor and above by a glass microscope slide or cover slip as a condensing surface, to receive the deposit. The metal parts are preferably of platinum or gold for most purposes. The metallic ring is about 1 mm. high and approximately 1 cm. in diameter. One advantage of the metal parts is better heat conduction from the supporting hot plate, which is bored diametrically to furnish a thermometer well, containing preferably a short Anschütz thermometer to avoid emergent stem corrections. Besides the avoidance of temperature lag, another advantage of the metal cell is the prevention of condensation of sublimate on the cell wall, which is a difficulty often encountered when the wall is of glass. A third desirable feature is the lenslike action of the metallic cell in converging a very small deposit at a focus on the condensing surface with the attendant gain in sensitivity for critical cases.

Miscellaneous methods of crystallization including crystallization from nonaqueous solvents and from fusion, have

been reported by others, notable by Hartshorne (*6*) but will not be further discussed here.

Profile Angular Measurement

Substances prepared directly in crystalline form suitable for profile angle measurement may be exemplified by the production of the high temperature (+126° C.) form of mercuric iodine (Figure 1) which separates in yellowish rhombs (obtuse angle, 115.4 from a hot solution of mercuric ion, $HgCl_2$) when the latter is touched with a droplet of concentrated hydriodic acid on the tip of a splinter of glass. Kohlschutter (*9*) gives several good methods of preparing this important compound and furnishes excellent photomicrographs of the product.

Selection of crystals suitable for profile angular measurements is based upon the avoidance of nondiagnostic forms and the adherence to specifications as given above.

The measurement of profile angular constants is effected by methods recommended in standard texts, such as that of Chamot and Mason (*4*, Vol. 1, p. 423). Satisfactory results may be obtained by protractor measurement of the enlarged image of the crystal as projected on a ground-glass or other screen through the optical system of the microscope. Protractor mensuration also serves well for photomicrographs of adequate size. A microscope fitted with a cross-hair ocular and provided with a rotating stage graduated in angular degrees, read to tenths by an attached vernier, is a convenient device for profile angular measurement. The crystal, on a microscope slide clamped to the stage of such an instrument, is centered with the apex of the angle to be measured at the intersection of the cross hairs projected from the eyepiece. First one side of this angle and then the other is brought in alignment with a given cross hair, and the angular rotation of the stage is determined by the difference in the successive readings on its graduated periphery.

The accuracy and precision in the determination of profile angular constants is apt to vary somewhat with the individual case. Undoubtedly, successive single measurements cannot be duplicated with much greater precision than one angular degree. Just as certainly, two different sets of readings on a given angle, separately arrived at and compared with each other as individual averages, must deviate from a mean between the two with a much greater precision than one angular degree. Evidently, the deviation will depend largely on the number of observations averaged to make up the sets of determinations compared. Since angular measurements can be quickly made in a short space of time, it is easy to increase the precision of profile angular constants in the manner suggested.

The accuracy of a single measurement also depends upon the size of the angle measured, as the percentage error involved decreases as the angle concerned increases in magnitude. For this reason the largest angle available should be most suitable for the determination of the constant. Thus, if but a single value is to be tabulated, the obtuse angle of a parallelogram should be selected rather than its smaller supplement.

An accuracy and precision of 0.2° is tentatively suggested as a reasonable tolerance for permissible deviations pending further developments. This proposal is based as an example upon a representative set of observations on the acute angle of the tribromophenol bromide (Figure 1) parallelogram. An average mean of 69.9° was found for sixteen individual determinations: 70.4°, 70.2°, 70.5°, 69.3°, 70.2°, 69.6°, 69.9°, 69.7°, 70.5°, 69.5°, 69.7°, 70.2°, 69.6°, 70.0°, 68.7°, and 70.1°. These were taken from different specimens and each represents, approximately, an average of four readings, one in each quadrant defined by the cross hairs in the ocular of the microscope.

The proposed accuracy and precision of 0.2° cannot be claimed for Table I, as it has been compiled in part from various sources, no doubt of varying reliability. Some of the values have been checked and found satisfactory, but opportunity has not been found to prepare material and verify them all. Discrepancies will be found, principally from slight experimental errors in independent determinations on mathematically related angles, where actual, not theoretical, values are recorded.

Angular Relationships

Angular relationships on microcrystalline profiles and silhouettes of crystals belonging to the tetragonal, hexagonal, orthorhombic, and monoclinic crystallographic systems are relatively simple and readily calculated. A method for arriving at definite values is discussed below for the systems mentioned with the exception of the clinopinacoid facies of the monoclinic, which is but slightly more complicated than the rest. In general angles derived from the isometric system, the *c* pinacoids of the tetragonal, hexagonal, and orthorhombic systems, rectangles from unmodified prisms or pinacoids, and the like are nondiagnostic because of their regularities, and are to be ignored for that reason, while forms derived from the triclinic crystallographic system cannot be systematically treated because of the extreme irregularities therein. As a general rule, angles derived from pyramids or domes and their combinations with prisms or pinacoids are both numerous and diagnostic and are the ones treated.

Multiple forms usually arise from slower preparational methods and can be avoided by employing more rapid processes, while arbitrary selection of the simpler forms almost invariably associated with the more complex, serves to avert the difficulties that arise from the source mentioned. These, however, in the cases cited are more apparent than real.

Figure 2 (1) and Figure 3 (upper right) represent, respectively, a geometric parallelogram and its crystalline analog of picric acid. The latter shows incipient development of lines that tend to produce the related hexagon. There are but two different angles on a parallelogram and these are supplementary; hence if either be known and recorded, the other may be readily calculated. In Figure 2 (2 and 2′) is shown the hexagon with two identical angles, A, retained from the original parallelogram and four new angles, C, resulting from truncation of angles B by lines drawn parallel to the bisector of the retained angle, A. The reason for the necessity of this type of truncation is inherent in the symmetry of the systems to which it is applied and is axiomatic to the crystallographer. All identical angles are identically lettered in Figure 2. As the sum of all angles of a six-sided polygon is 720°, the formula for calculating angle C for a hexagon of this general type is $\frac{720° - 2A}{4} = C$. Figure 3 (upper left) is such an actual hexagon of picric acid. If angle A were truncated and B retained, an analogous hexagon would result by the same process. It is evident that either angle A or angle B must be common to the parallelogram and one or the other of its derived hexagons. The octagon (Figure 2, 4 and 4′) results when both angles A and B of the original parallelogram or of either derived hexagon are truncated in the same manner. It is noteworthy that there are only two different angles in the octagon and that these are identical with one or the other of the larger angles found on a hexagon. The trapezoid (Figure 2, 5, and Figure 3, left center) results when the two like angles of a hexagon are bisected, leaving two of the original four identical angles of the last-named figure intact. Close inspection of the rest of Figure 2 shows some of the infinite number and variety of forms that might result by continuing indefinitely the processes indicated.

It is there also indicated how few and simply related are the angles encountered. Figure 3 is to be consulted for crystalline forms analogous to the theoretical figures of Figure 2.

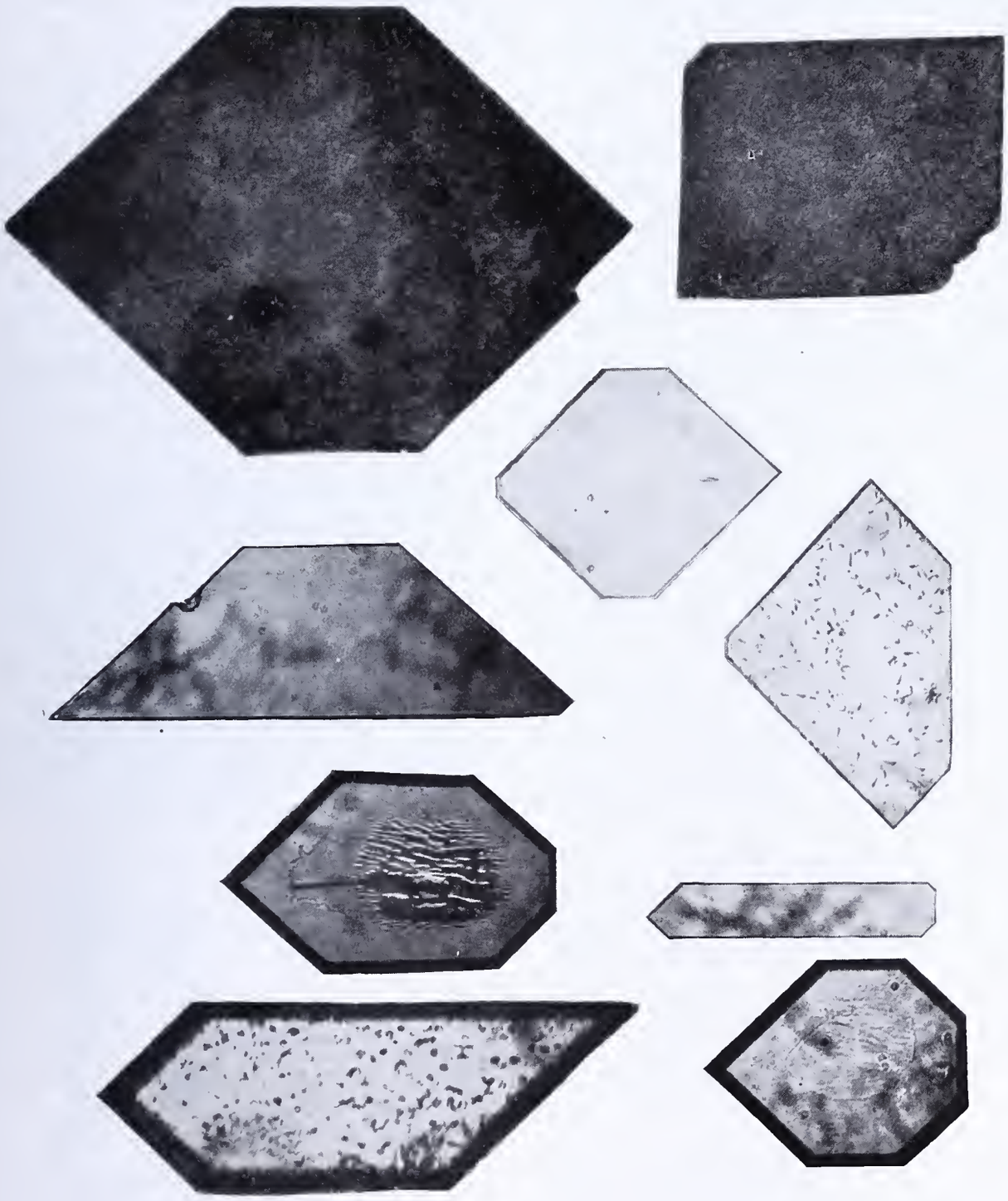

FIGURE 3. PICRIC ACID CRYSTALS

Figure 1 illustrates the usual simplicity of profiles and silhouettes apt to result from the more rapid analytical procedures.

Summary and Conclusions

The foregoing seems to indicate the validity of a corollary law of the constancy of profile or silhouette angles, corresponding to that of interfacial angles and applicable to chemically precipitated or sublimed crystals with appreciable extensions in two dimensions and restricted extension in the third; the facility with which microcrystals suitable for profile angular measurements may be prepared; the simplicity of profile angle mensuration; the value of profile angular data as constants in cases where the ordinary constants do not exist because of decomposition or sublimation of the compound under examination; the simplicity of profiles and silhouettes produced by the ordinary rapid analytical methods; the comparatively simple numerical and geometrical relationships existing even on complex crystals formed by slower preparational methods; the possibility of individual differentiation by profile angular studies on lots of chemical having a nominal average chemical purity; and the value of photomicrographs of single crystals having adequate size, in the presentation of quantitative ocular proof.

Literature Cited

(1) Amelink, P., "Schema zur microchemischen Identifikation von Alkaloiden," Amsterdam, N. V. D. D. Centen's Uitgevers Maatschappij, 1934.

(2) Behrens, H., "Manual of Microchemical Analysis," London, Macmillan & Co., 1894.

(3) Behrens, H., "Microchemische Analyse organischen Verbindungen," Voss, Leipzig, 1895–7.
(4) Chamot, E. M., and Mason, C. W., "Handbook of Chemical Microscopy," New York, John Wiley & Sons, 1931.
(5) Emich, F., and Schneider, "Microchemical Laboratory Manual," New York, John Wiley & Sons, 1930.
(6) Hartshorne, N. H., *J. Chem. Soc.*, 1934, 1830.
(7) Haushofer, H., "Microchemische Reaktionen," Braunschweig, 1885.
(8) Hoffman, H., Jr., and Johnson, W. C., *J. Assoc. Official. Agr. Chem.*, 13, 367 (1930).
(9) Kohlschutter, H. W., *Kolloidchem. Beihefte*, 24, 319 (1927).
(10) Labanukrom, Toa, *Ibid.*, 29, 80 (1929).
(11) Molisch, H., "Mikrochemie der Pflanze," 3rd ed., Jena, Gustav Fischer, 1923.
(12) Shead, A. C., *Proc. Oklahoma Acad. Sci.*, 15, 86 (1935).
(13) *Ibid.*, 16, 87 (1936).
(14) Streng, A., "Neues Jahrbuch Mineralogie," 2nd ed., p. 429, 1888.
(15) Vogelsang, "Die Crystalliten," Bonn, 1875. (See crystallites, Encyclopedia Britannica, 14th ed.)
(16) Wagenaar, M., *Pharm. Weekblad*, 72, 642 (1935).
(17) Walcott, A. I., *Am. Mineral.*, 11, 236 (1926).
(18) Wormley, T. G., "Microchemistry of Poisons," Philadelphia, J. B. Lippincott, 1885.
(19) Zimmermann, A., "Botanical Microtechnique," Henry Holt & Co., 1901.

RECEIVED June 7, 1937. Presented before the Microchemical Section at the 93rd Meeting of the American Chemical Society, Chapel Hill, N. C., April 12 to 15, 1937.

Volumetric Determination of Iodine Using Elek-Hill Microbomb

ADALBERT ELEK AND ROBERT A. HARTE, The Rockefeller Institute for Medical Research, New York, N. Y.

THE utilization of micromethods has become increasingly extensive, not only because of their great value in conserving precious material, but because of the considerable saving in time their application permits.

The introduction of the peroxide fusion as carried out in the Elek-Hill microbomb (*3*) has greatly speeded the processes of analysis for halogens (*1*, *3*), sulfur and phosphorus (*4*), and arsenic (*2*).

In order to eliminate the preparation, drying, and weighing of the filter, as well as the tedious filtration, washing, drying, and weighing of precipitates, volumetric methods are now supplanting gravimetric procedures wherever possible. As another step in this direction, the volumetric determination of iodine after peroxide fusion is described herein. Further experiments are in progress to develop volumetric methods for the determination of chlorine and bromine.

Using the Pregl spiral tube method, Leipert (*6*) and Goldberg (*5*) have described volumetric methods for iodine, based on conversion to iodate followed by treatment with iodide and titration with thiosulfate. However, the spiral tube combustion requires fragile apparatus and the exercise of great care by the analyst to ensure complete decomposition of the sample, especially in the case of volatile liquids. It is also more time-consuming than the bomb fusion, a half hour or more being needed for the combustion of the sample.

Procedure

A sample of from 3 to 6 mg., accurately weighed, is ignited in the bomb exactly as described by Elek and Hill (*3*). After cooling, the bomb contents are dissolved in 15 to 20 ml. of hot water in a 125-ml. Erlenmeyer flask. When solution is complete, the bomb is removed from the flask and carefully rinsed. To the fluid sufficient boiled-out Alundum, grain size 16, is added to cover about two-thirds of the bottom of the flask, and the liquid is kept in moderate ebullition for 30 minutes, the whole of the free surface being covered with breaking bubbles. (In a preliminary experiment it was found that no peroxide was left in the solution at the end of this time. With shorter boiling, complete destruction of the peroxide could not be assured.) The use of Alundum instead of glass beads completely prevents bumping, even when this alkaline solution becomes very concentrated. After cooling under the tap, the solution is made just acid to methyl orange with 3 *N* sulfuric acid, run in from a 50-ml. buret. About 10 ml. are required. The acid solution is filtered, with suction, into a ground-glass-stoppered 125-ml. Erlenmeyer flask where it is treated with 1 ml. of saturated bromine water to ensure complete oxidation of the iodide to iodate. Iodine is almost quantitatively converted to iodate in the bomb (*3*), but the oxidation with bromine is necessary to make certain the completeness of the conversion.

After the solution has stood, stoppered, for 5 minutes the excess of bromine is destroyed by the addition of 2 to 3 drops of formic acid (*7*) with thorough shaking to remove the last traces of bromine from the vapor phase as well as from the solution. During this treatment a moderate pressure is built up in the flask, necessitating care in subsequently opening it. If, after 2 minutes, the solution is not completely decolorized, another drop of formic acid should be added with shaking. To the colorless solution 0.2 to 0.3 gram of potassium iodide is added, the flask is stoppered and shaken to dissolve the salt, and, after 5 minutes, the liberated iodine is titrated with 0.01 *N* sodium thiosulfate (prescribed instead of 0.02 *N*, as recommended by several authors, because of the greater accuracy it permits, in addition to its more general usefulness in the microanalytical laboratory), which is standardized daily against 0.01 *N* potassium biiodate.

One milliliter of 0.01 *N* thiosulfate solution is equivalent to 0.2115 mg. of iodine. Under the conditions described, using the purest grade of analytical reagents, the blank value is entirely negligible. Typical analytical results are given in Table I.

TABLE I. ANALYTICAL RESULTS

Substance	Weight of Sample	0.01 *N* Thiosulfate Required	Iodine Found	Iodine Theory
	Mg.	*Ml.*	%	%
Iodoacetamide	3.922	12.70	68.51	68.64
	4.182	13.53	68.48	
Iodoacetic acid	3.912	12.63	68.33	68.27
	3.600	11.61	68.26	
Iodoacetylsulfanilic acid Na	5.311	8.85	35.27	35.26
	4.503	7.50	35.25	
2-Iodobutane	6.633	21.62	68.99	69.02
	4.183	13.68	69.18	
p-Iodobenzoic acid	4.220	5.13[a]	51.40	51.18
	3.919	4.74[a]	51.20	
Iodopropionic acid	5.295	15.88	63.46	63.46
	3.218	9.64	63.38	
Iodobutyric acid	5.220	14.63	59.33	59.30
	4.202	11.76	59.23	
6-Iodo-4-tosyl-2,3-diacetylbenzylglucoside	4.892	4.73	20.45	20.54
	5.396	5.23	20.49	

[a] 0.02 *N* thiosulfate solution was employed for the titration.

As seen from the duplicate analyses presented, the precision of the method is high. The results show a very satisfactory accuracy, the mean deviation of the sixteen analyses given from the theoretical values being less than ±2 parts per thousand. The time and labor involved are reduced materially when compared with existing methods, and as the number of analyses to be done is increased the economy of time becomes much more than simply proportionally greater.

Literature Cited

(1) Beamish, F. E., IND. ENG. CHEM., Anal. Ed., 5, 348 (1933).
(2) Beamish, F. E., and Collins, H. L., *Ibid.*, 6, 379 (1934).
(3) Elek, A., and Hill, D. W., *J. Am. Chem. Soc.*, 55, 2550 (1933).
(4) *Ibid.*, 55, 3479 (1933).
(5) Goldberg, J. L., *Mikrochemie*, 14, 161 (1933).
(6) Leipert, T., *Mikrochem. Pregl Festschr.*, 266 (1929).
(7) Vieböck, F., and Brecher, C., *Ber. deut. chem. Ges.*, 63, 3207 (1930).

RECEIVED July 14, 1937.

Determination of Alkyl and Aryl Halogen

In the Presence of Each Other

WILLIAM H. RAUSCHER, Rensselaer Polytechnic Institute, Troy, N. Y.

THE use of monoethanolamine in the determination of halogens in organic combination has been previously reported (*1*). Experience gained in the use of this reagent suggested that it might be used to advantage in the determination of alkyl and aryl halogen in the presence of each other. Monoethanolamine has proved to be capable of quantitatively converting the alkyl or reactive halogen in a number of compounds, solutions, and mixtures, which contain both alkyl and aryl halogen, to the ionic form without affecting the aryl halogen present. The reaction is also quantitative when the halogenated compounds are present in dilute kerosene solution, thus making the reagent useful in the analysis of certain types of insecticides. The aryl halogen in such cases may be found by determining the total halogen by the procedure of Method I as outlined elsewhere (*1*), and then subtracting the alkyl halogen found.

The compounds, solutions, and mixtures listed in Table I were chosen to establish the range of usefulness of the method. The kerosene solutions of carbon tetrachloride and *p*-dichlorobenzene were chosen to simulate an insecticide. Where the alkyl and aryl substances used as pairs had sufficient mutual solubility and fairly close boiling points, known solutions of the two were made up in small glass-stoppered bottles and portions of the solutions used immediately for analysis. Two or more portions were used for determining the alkyl halogen present and two or more portions for the determination of the total halogen present. In those cases where mutual solubility was low, or boiling points widely different, small amounts of the two substances were weighed out in the glass-stoppered vials of Method I or the bomb tubes of Method II (*1*). The entire weighed mixture or solution was analyzed so that only the alkyl or total halogen content of the sample could be determined. The kerosene solutions were made up in small glass-stoppered bottles by weighing all the ingredients.

Determination of Alkyl Halogen in the Presence of Aryl Halogen

The apparatus, materials, method of weighing samples, and the general procedure are the same as in Method II. Micro- and semimicrosamples of the kerosene solutions are weighed, but macrosamples may be measured with a Mohr pipet. One milliliter of the amine is used for microsamples contained in the small bomb tubes, and 3 to 4 ml. are used for macrosamples contained in the large bomb tubes. The kerosene solutions float on the amine, so that care must be used in sealing the bomb in order to avoid loss of the more volatile constituent. Microsamples are heated at the boiling point of diethanolamine for 0.5 hour and the macrosamples for 1 hour. After opening the bombs the procedure of Method II is followed exactly. Insoluble aromatic substances are brought into solution by the use of alcohol or dioxane.

TABLE I. RESULTS

Weight of Sample	% Aryl Halogen / % Alkyl Halogen	Total Halogen: Weight of Ag halide	Total Halogen: Found	Total Halogen: Calcd.	Alkyl Halogen: Weight of Ag halide	Alkyl Halogen: Found	Alkyl Halogen: Calcd.	Aryl Halogen (by Difference): Weight of Ag halide	Aryl Halogen (by Difference): Found	Aryl Halogen (by Difference): Calcd.
Mg.		*Mg.*	%	%	*Mg.*	%	%	*Mg.*	%	%
				p-Bromophenacyl Bromide						
7.250	1.000	.....	...	57.52	4.912	28.83	28.76	....	...	28.76
7.578		.....	...		5.138	28.85		....	...	
6.415		8.669	57.51		.....	...		....	28.67	
4.509		6.102	57.59		.....	...		....	28.75	
				p-Chlorobenzyl Bromide						
13.343	0.444	.....	...	...	12.225	38.99	38.90	....	...	17.26
16.359		.....	...		14.937	38.86		....	...	
7.584		12.215	...		.....	...		5.276	17.21	
11.164		18.026	...		.....	...		7.812	17.31	
				o-Chlorobenzyl Chloride						
21.146	1.000	.....	...	44.06	18.883	22.09	22.03	....	...	22.03
15.215		.....	...		13.590	22.10		....	...	
12.371		22.070	44.13		.....	...		....	22.04	
10.031		17.870	44.07		.....	...		....	21.97	
				o-Chlorobenzyl Bromide						
36.34	0.440	.....	...	...	33.32	39.02	38.90	....	...	17.26
25.52		.....	...		23.36	38.95		....	...	
57.50		92.70	...		.....	...		40.03	17.22	
31.15		50.32	...		.....	...		21.79	17.30	
				p-Bromobenzenesulfonyl Chloride						
15.345	2.253	.....	...	...	8.848	13.67	13.88	....	...	31.28
19.896		.....	...		11.098	13.80		....	...	
13.868		17.877	...		.....	...		10.176	31.23	
8.677		11.199	...		.....	...		6.381	31.29	
				β,β′-Dichlorodiethyl Ether and Chlorobenzene[a]						
50.25	0.641	.....	...	40.52	50.27	24.75	24.69	....	...	15.83
34.95		.....	...		34.95	24.74		....	...	
42.35		69.29	40.47		.....	...		....	15.73	
38.40		62.90	40.52		.....	...		....	15.78	
38.98	0.0160	.....	...	49.16	76.23	48.38	48.39	....	...	0.77
21.68		.....	...		42.35	48.32		....	...	
46.02		91.40	49.13		.....	...		....	0.78	
20.60		40.86	49.07		.....	...		....	0.72	
83.68	15.87	.....	...	32.22	6.450	1.91	1.91	....	...	30.31
64.27		.....	...		4.970	1.91		....	...	
15.42		20.002	32.10		.....	...		....	30.19	
30.40		39.50	32.14		.....	...		....	30.23	

[a] Solution.

(*Continued on next page*)

TABLE I. RESULTS (*Continued*)

Weight of Sample	% Aryl Halogen / % Alkyl Halogen	Total Halogen: Weight of Ag halide	Total Halogen: Found	Total Halogen: Calcd.	Alkyl Halogen: Weight of Ag halide	Alkyl Halogen: Found	Alkyl Halogen: Calcd.	Aryl Halogen (by Difference): Weight of Ag halide	Aryl Halogen (by Difference): Found	Aryl Halogen (by Difference): Calcd.
Mg.		*Mg.*	%	%	*Mg.*	%	%	*Mg.*	%	%
				Acetylene Tetrachloride and Bromobenzene[b]						
7.121	0.0114	.....	...	...	23.853	82.86	82.94	....	...	0.94
396.45	51.25	.....	...		15.738	0.98	0.98	....	...	50.33
21.635	0.0498	70.240	...			...	78.05	1.978	3.89	3.89
61.754	41.68	75.860	...			...	1.20	72.854	50.20	50.20
				Hexachloroethane and Iodobenzene[b]						
53.28	0.122	.....	...	...	164.55	76.40	76.37	....	...	9.34
174.70	1.880	.....	...	...	170.40	24.13	24.13	....	...	45.48
39.361	34.73	47.17	...	...	.....	...	1.76	44.37	60.94	61.00
36.746	0.164	116.05	...	...	.....	...	72.63	8.17	12.02	11.93
				Carbon Tetrachloride and *p*-Dichlorobenzene[b]						
73.24	11.75	.....	...	50.13	11.820	3.99	3.93	....	...	46.20
64.95	5.918	.....	...	51.83	19.644	7.48	7.49	....	...	44.34
16.246	0.0275	.....	...	90.00	57.584	87.62	87.58	....	...	2.42
17.959	3.035	39.675	54.64	54.72	.....	...	13.56	....	41.08	41.16
16.162	0.0228	59.020	90.50	90.53	.....	...	88.51	....	1.99	2.02
15.620	0.0067	57.873	91.66	91.65	.....	...	91.03	....	0.63	0.62
33.126	0.0074	122.65	91.59	91.59	.....	...	90.92	....	0.67	0.67
18.192	0.0300	66.080	89.85	89.82	.....	...	87.20	....	2.65	2.62
				Carbon Tetrachloride and *p*-Dichlorobenzene (in Kerosene)						
7.848	1.769	.....	...	8.03	0.924	2.91	2.90	....	...	5.13
8.515		.....	...		0.970	2.82		....	...	
13.405		.....	...		1.460	2.69		....	...	
107.10		.....	...		12.497	2.88		....	...	
141.55		.....	...		16.786	2.93		....	...	
19.94		6.491	8.10		.....	...		....	5.20	
51.52		16.840	8.08		.....	...		....	5.18	
851.4 (1 ml.)		.....	...		98.55	2.86		....	...	
851.4		.....	...		98.96	2.88		....	...	
425.7		137.30	8.01		.....	...		....	5.11	
425.7		137.65	8.04		.....	...		....	5.14	

[b] Mixture.

No attempt is made to bring the kerosene into solution. Spinning coagulation of the silver halide is the more convenient and rapid method of coagulation.

For compounds of the type *p*-chlorobenzyl bromide and combinations of the type β,β'-dichlorodiethyl ether–chlorobenzene, it suffices to reflux the sample with monoethanolamine alone in the open test tube–cold finger procedure of Method I (*1*). For the first type of compound 10 minutes' refluxing is sufficient to convert the alkyl halogen to the ionic form. In other cases the time allowed should be extended.

Determination of Aryl Halogen in the Presence of Alkyl Halogen

To determine the percentage of aryl halogen the percentage of total halogen present is found and from this is subtracted the percentage of alkyl halogen found, provided that both halogens present are the same. When the two halogens present are not the same the calculation of aryl halogen must be handled differently. In this case the weight of mixed silver halides from the total halogen present in the sample is first determined. From this weight is subtracted the weight of the silver halide from the alkyl halogen present to get the weight of silver halide from the aryl halogen. The weight of "alkyl" silver halide is obtained by multiplying the sample weight by the percentage of alkyl halogen and dividing by the proper gravimetric factor.

In either case the total halogen is converted to the ionic form by the use of sodium, monoethanolamine, and dioxane exactly as in Method I.

Summary

A simple and rapid method for the determination of alkyl and aryl halogen in the presence of each other has been developed. It appears to be applicable to a variety of problems and may be used on a micro, semimicro, or macro scale. The procedure may, of course, be used qualitatively.

Literature Cited

(1) Rauscher, IND. ENG. CHEM., Anal. Ed., 9, 296 (1937).

RECEIVED July 27, 1937. Abstract of part of the Ph.D. dissertation of William H. Rauscher in the Graduate School of Rensselaer Polytechnic Institute.

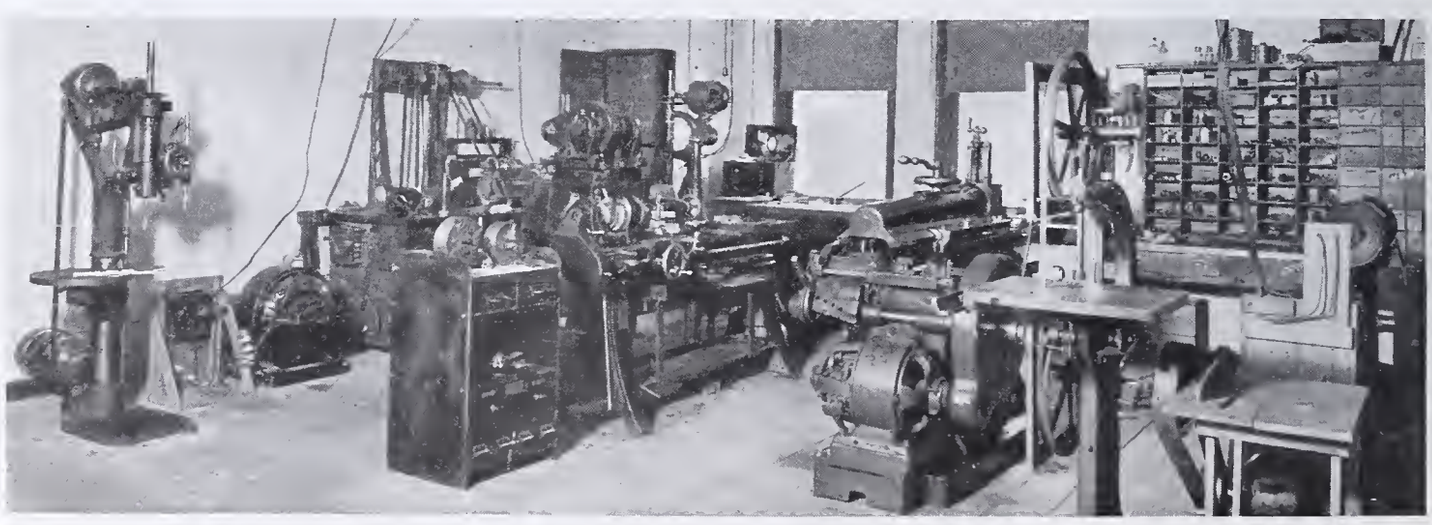

ANALYTICAL EDITION

INDUSTRIAL and ENGINEERING CHEMISTRY

Harrison E. Howe, Editor

Electrometric Titration of Acids in Oxidized Petroleum Oils

A. R. RESCORLA, F. L. CARNAHAN, AND M. R. FENSKE
Petroleum Refining Laboratory, The Pennsylvania State College, State College, Pa.

The very weak acids present in oxidized petroleum oils are titrated only with difficulty by most methods. A simple pair of dissimilar electrodes and a direct-reading amplifier with the oil dissolved in a nonaqueous liquid with suitable solvent power and conductivity allow the estimation of acids in sludged petroleum oils with reasonable accuracy.

IT IS LIKELY that not all the acids of oxidized petroleum oils are dissolved in the alcohol-water mixture used in the procedure (*2*) in A. S. T. M. Designation D188-27T, but that instead they are distributed between the solvent and the oil (*3*). This circumstance makes titration difficult. Furthermore, the deep shade of the mixture being titrated masks the delicate color change of the indicator. Committee D-2 of the American Society for Testing Materials has been active in developing a potentiometric method (*1*) for the determination of oil acidity under such circumstances that ordinary procedures are not feasible. A thermionic titrimeter or a potentiometer is used to indicate the e. m. f. of an electrode system composed of a calomel half-cell and a platinum indicator electrode; the oil is dissolved in butyl or amyl alcohol or in certain solvent mixtures such as equal parts of butyl alcohol and benzene, lithium chloride being present to give solution conductance; sodium butylate is used as the base. Other investigators (*3, 5, 7, 8, 9*) have studied the possibility of electrometric titration of oxidized oils in nonaqueous mediums, usually isoamyl or *n*-butyl alcohol saturated with lithium chloride. Various types of electrodes have been proposed; Ralston, Fellows, and Wyatt (*5*) as a result of Kahlenberg's work (*4*) used the carbon-platinum pair. Shenk and Fenwick (*6*) designed a direct-reading amplifier which can be substituted for the potentiometer frequently used in connection with bimetallic electrode systems; this instrument is satisfactory for aqueous or nonaqueous solutions.

In the present investigation, attention has been given to the selection of a suitable electrode pair, an indicating device and a base, but it was especially necessary to develop a nonaqueous mixture of proper solvent and conducting power for use with oxidized oils.

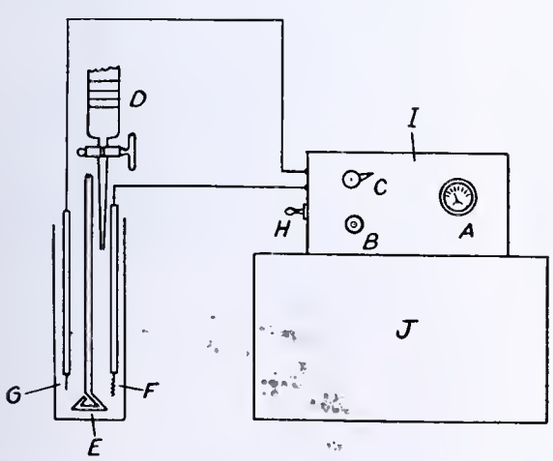

FIGURE 1. ASSEMBLY FOR ELECTROMETRIC TITRATION

A. Milliammeter
B. Battery switch
C. Adjustable rheostat
D. Buret, 10 cc.
E. Stirrer, motor not shown
F. Platinum electrode
G. Tungsten electrode
H. Electrode switch
I. Aluminum box containing tubes 57, 2A3, etc.
J. Asbestos box containing transformers, etc.

Apparatus

The apparatus used in determining acid contents of oxidized oils is shown in Figure 1. It consists essentially of a pair of electrodes together with a device for amplifying and indicating the very small current furnished by the electrodes to a high-resistance circuit, a buret (graduated in units of 0.05 cc.), and a suitable reaction vessel with provision for stirring. The presence of air did not cause any difficulty. The oil under examination was dissolved in a mixture consisting of equal parts by volume of isoamyl alcohol, benzene, and carbon tetrachloride and saturated with lithium chloride; the base was prepared by dissolving sodium in isoamyl alcohol.

ELECTRODES. Since the hydrogen electrode and other standard electrodes are easily poisoned and rather difficult to use in routine work, the tungsten-platinum pair was selected for this investigation. Of several electrode combinations tested (see Figure 3) the tungsten-platinum gave the largest change in potential at the equivalence point and appeared to be sufficiently rugged. Holt and Kahlenberg (*4*) previously found this combination suitable for water solutions.

The data in Table I present a comparison of titration results

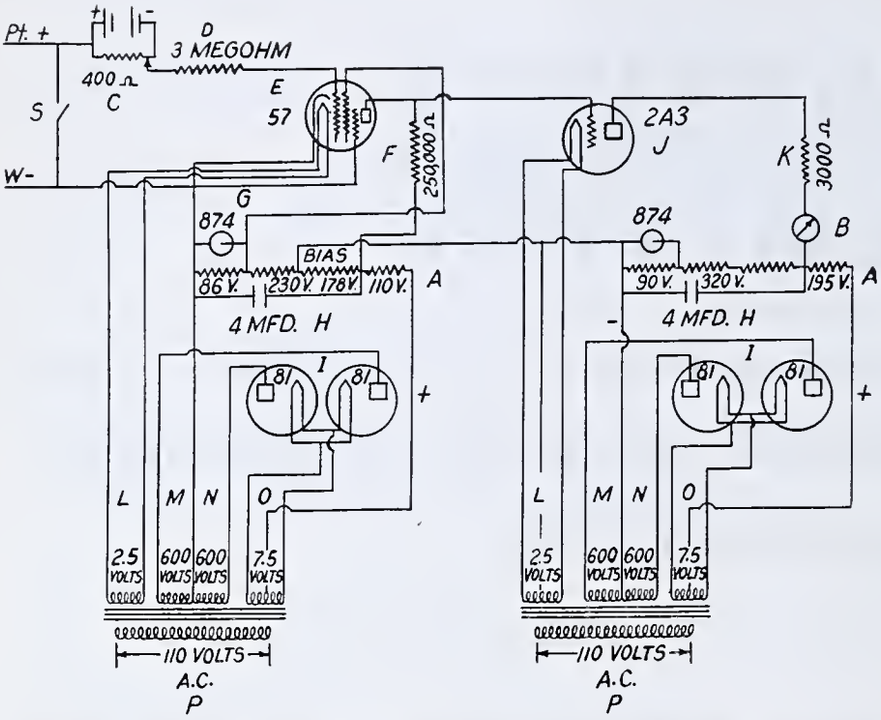

FIGURE 2. WIRING DIAGRAM OF INDICATOR FOR ELECTROMETRIC TITRATION

A. Voltage dividing resistance, 250,000 Ω
B. Direct current milliammeter (0 to 50 ma.)
C. Radio "C" battery (UH 15 B) and resistance
D. 3-megohm resistance
E. R. C. A. radiotron tube 57
F. 250,000 Ω plate resistance
G. R. C. A. radiotron tube 874
H. 4-microfarad Sprague oil condenser, 1000 volts
I. R. C. A. rectifier tube 81
J. R. C. A. radiotron tube 2A3
K. 3000 Ω resistance
L. 2.5-volt tap-off transformer
M, N. 600-volt tap-off transformers
O. 7.5-volt tap-off transformer
P. Power supply to transformer
Pt. Platinum electrode
W. Tungsten electrode
S. Shorting switch for electrodes

obtained with the tungsten-platinum pair to those resulting from the use of platinum-calomel and platinum-silver–silver chloride electrodes; the neutralization number for a particular oil sample is 0.71, 0.73, and 0.77, respectively, for the three electrode combinations.

TITRIMETER. The titrimeter consists of a rectifier and an amplifier with electrical circuits as shown in Figure 2.

The No. 81 tubes are full wave rectifiers, each with a 4-microfarad filter to supply voltages for the grid and plate circuits of tubes 57 and 2A3. The voltage imposed on the screen of tube 57 is controlled by a gas-filled voltage-regulator tube designated as 874. It will be noted that the system is arranged to nullify the effect of variations in the source of supply.

The potential over the grid circuit of tube 57 is the algebraic sum of the bias voltage and the voltage across the electrodes. It may be seen from Figure 2 that a voltage change in the grid circuit of the 57 tube affects the plate current of this tube. The plate current variation in the 57 tube in turn effects a change in the bias of the grid circuit of the 2A3 tube through a 250,000-ohm resistor. The bias on the 2A3 tube is the algebraic sum of the voltage drop of the plate resistor and the drop across the section of the voltage dividing resistor marked *BIAS*. When the current decreases in the plate of tube 57, the negative bias on tube 2A3 becomes less with a concomitant increase in current. Since this current is indicated directly on the milliammeter, *B*, changes in the potential between the electrodes may be readily followed as the titration proceeds. At the outset of a titration, the plate current of the 2A3 tube is regulated to about 10 milliamperes by adjusting the variable resistance, *C*; with this initial current, the radio tubes function in the most sensitive part of their operating curve during the addition of base.

Experimental

SOLVENT. Electrometric titration methods were first used for acids in turbine oils. Such oils are usually of low viscosity and contain no appreciable amount of sludge or naphtha-insoluble material; it was found that isoamyl alcohol saturated with lithium chloride is a satisfactory solvent medium. However, this solvent is not suitable for more viscous oils or for sludged products. Considerable difficulty was experienced in finding a solvent mixture which would dissolve sludged oils completely and readily and at the same time possess sufficient electrical conductivity. Such good oil solvents as benzene, chloroform, or carbon tetrachloride are poor conductors and apparently not susceptible to improvement. When a saturated solution of lithium chloride in ethyl alcohol was mixed with various nonconducting oil solvents, the mixture had good conductance but low solvent power. The presence of a conducting salt in many

TABLE I. COMPARISON AMONG PLATINUM-TUNGSTEN, PLATINUM-CALOMEL, AND PLATINUM-SILVER–SILVER CHLORIDE ELECTRODES IN TITRATING A SAMPLE OF USED OIL

Base	Pt-W		Pt-Calomel		Pt-Ag–AgCl	
Cc.	*Ma.*	*ΔMa./cc.*	*Ma.*	*ΔMa./cc.*	*Ma.*	*ΔMa./cc.*
0	8.0	..	10	..	5.0	..
0.1	8.8	8	10.8	8	6.0	10
0.2	9.2	4	11.0	2	6.5	5
0.3	9.8	6	11.5	5	6.8	3
0.4	10.2	4	11.5	0	7.0	2
0.5	10.5	3	11.8	3	7.2	2
0.6	11.0	5	12.8	10	7.5	3
0.7	11.5	5	13.0	2	8.0	5
0.8	13.0	15	13.2	2	8.8	3
0.9	14.2	12	13.8	6	9.8	10
1.0	15.8	16	15.0	12	11.2	14
1.1	17.0	12	16.5	15	13.8	26
1.2	19.5	25	18.0	15	15.2	16
1.3	21.2	17	19.8	18	16.5	13
1.4	24.0	28	21.8	20	18.5	20
1.5	27.0	30	24.3	25	21.0	25
1.6	29.2	22	26.8	25	23.5	25
1.7	30.2	10	28.5	17	27.0	35
1.8	31.2	10	29.5	10	28.5	15
1.9	32.0	8	30.5	10	30.5	20
2.0	32.2	2	31.0	5	32.5	20
2.1	....	..	....	..	33.2	7
Neutralization number	0.71		0.73		0.77	

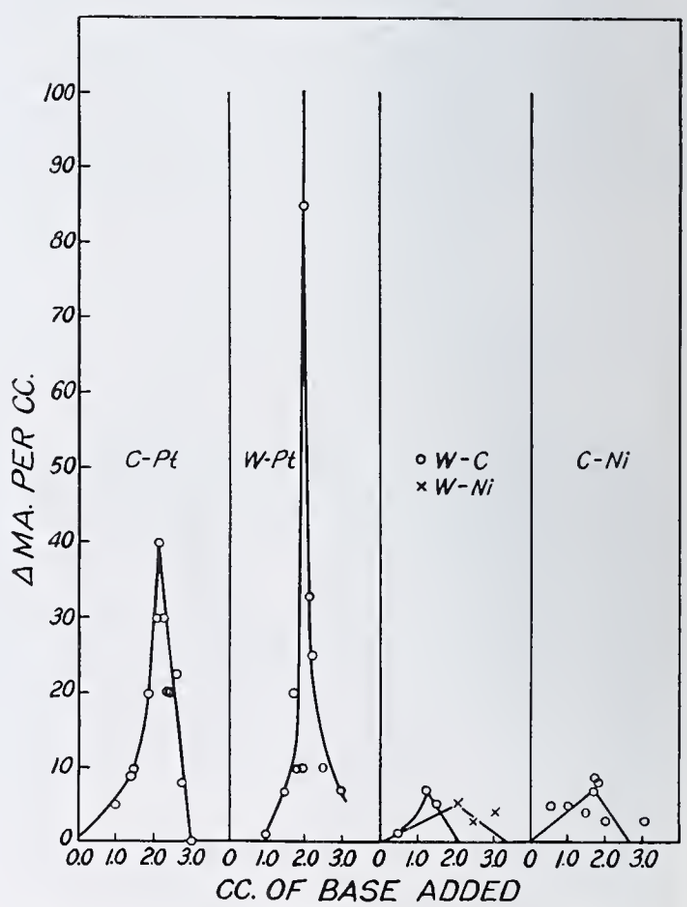

FIGURE 3. INFLECTIONS OBTAINED WITH VARIOUS ELECTRODE PAIRS IN THE TITRATION OF ACIDS IN A USED OIL

cases appears to decrease oil solubility. Table II gives information on some of the solvents tried. At length it was discovered that a mixture composed of equal parts by volume of isoamyl alcohol, benzene, and carbon tetrachloride and saturated with lithium chloride evidences the necessary qualifications. It was found possible to dissolve completely an oil containing 0.4 per cent of sludge in two volumes of this solvent; in titrations six or more volumes of solvent to one of oil were used.

The solvent may be conveniently prepared as follows: The middle 80 per cent of commercial isoamyl alcohol as obtained by simple distillation was refluxed half an hour with an excess of lithium chloride. Volumes of benzene and carbon tetrachloride equal to that of the isoamyl alcohol were then added; the mixture was refluxed for an additional half hour, still in the presence of undissolved lithium chloride. The solvent was filtered from any excess salt and stored in dark glass bottles.

Base. A base prepared by dissolving sodium in freshly distilled isoamyl alcohol was found to be more satisfactory than one prepared from potassium hydroxide and isoamyl alcohol. The solution was made up every week and kept in dark glass bottles with stoppers; no special arrangements were made to exclude air. Standardization was effected by the use of C. P. benzoic acid, using the electrometric titration procedure described later. Except for oils containing more than about 0.2 per cent of sludge (naphtha-insoluble material), the base used was approximately 0.05 N; for such oils 0.2 N base gave a sharper inflection in the titration. Some of the results may be explained on the basis that 1 cc. of reagent added contains four times as much base, but in other cases the end point with the weaker base can hardly be detected. The situation is shown graphically in Figure 4.

Procedure. The amplifier is set in operation by imposing 110 volts upon the transformers and switching on the "C" battery (C, Figure 2). Ten minutes are allowed for the tubes to reach equilibrium. In the meantime, the platinum-tungsten electrodes are removed from the 5 N hydrochloric acid solution in which they are immersed when not in use, heated red-hot, and allowed to cool before being placed in operating position as shown in Figure 1. An oil sample of approximately 4 grams (weighed to 0.01 gram) is put in a cylindrical glass container about 12.5 cm. (5 inches) tall and 3.75 cm. (1.5 inches) in diameter. To the oil are added 30 cc. of a liquid mixture containing equal volumes of isoamyl alcohol, benzene, and carbon tetrachloride and saturated with lithium chloride.

With the test jar in position as shown in Figure 1, its contents are whirled rapidly by an electric stirrer. The shorting switch (S, Figure 2) is opened and the resistance, C, is adjusted to allow a current of 10 milliamperes through the system; since the electrodes do not reach equilibrium at once, variation of the resistance is continued until a steady state is attained.

Addition of base to the oil solution is made in 0.1-cc. portions with stirring for 1 minute after each increment before the reading of the milliammeter is taken. The titration is conducted in this manner until a sharp increase in current is noted on adding one of the 0.1-cc. portions of base; further additions produce little change in current. From the data so obtained the increase in milliamperes per cubic centimeter of base added (Δma. per cc.) is calculated; the end point of the operation is indicated by a comparatively large value for this term. Correction for any solvent acidity is made on the basis of blank runs. End points may be shown very clearly by plotting Δma. per cc. against the amount of base added as has been done in Figure 3; this procedure, however, is not usually necessary, as inspection of the calculated values is sufficient. The time required for each titration is approximately half an hour. The data have been expressed as A. S. T. M. neutralization numbers, milligrams of potassium hydroxide per gram of oil.

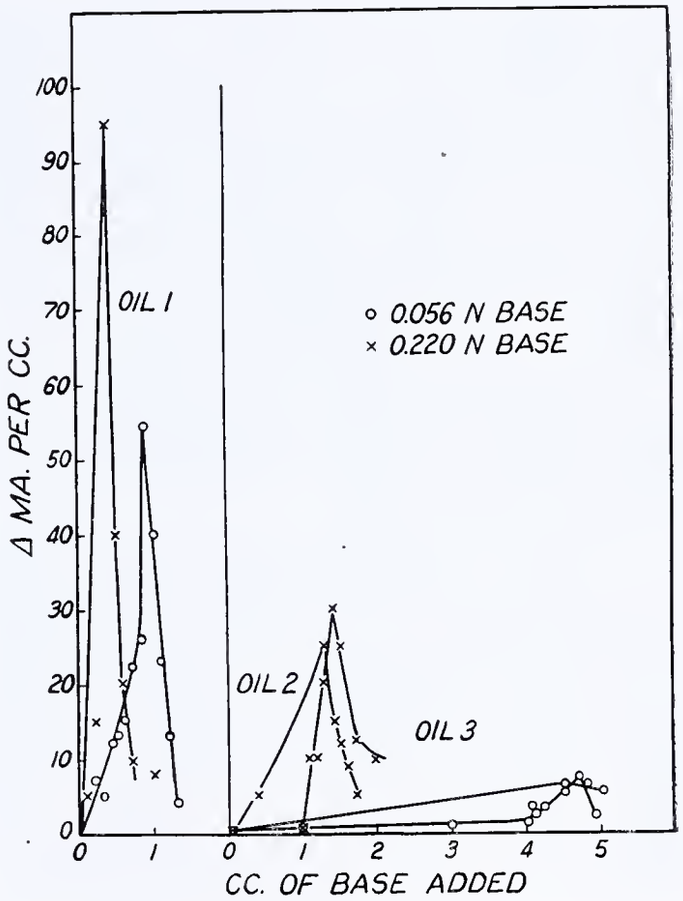

Figure 4. Inflections Obtained with Different Concentrations of Sodium Isoamylate in the Titration of Used Oils

Table II. Solvents Examined for Conductivity and Oil Solubility

Solvents	Conducting Salt	Oil Solubility	Conductivity
Isoamyl alcohol	LiCl	Fair	Good
n-Butyl alcohol (10 parts by volume), carbon tetrachloride (1 part)	LiCl	Poor	Good
Ethyl acetate (6 parts), benzene (3 parts), carbon tetrachloride (1 part)	LiCl	Poor	Good
Isoamyl alcohol, benzene, carbon tetrachloride (equal parts)	LiCl	Good	Good
sec-Butyl alcohol	LiCl or $HgCl_2$	Poor	Poor
Dioxan	LiCl or $HgCl_2$	Poor	Poor
Tetralin	LiCl or $HgCl_2$	Poor	Poor
Terpineol	LiCl or $HgCl_2$	Poor	Poor
Pentacetate	LiCl or $HgCl_2$	Poor	Poor
Chlorobenzene	LiCl or $HgCl_2$	Poor	Poor
Tetrachloroethane	LiCl or $HgCl_2$	Poor	Poor
Hexalin	LiCl or $HgCl_2$	Poor	Poor
Butyl propionate	LiCl or $HgCl_2$	Poor	Poor
Butyl acetate	LiCl or $HgCl_2$	Poor	Poor
α-Picoline	LiCl or $HgCl_2$	Poor	Poor
o-Dichlorobenzene	LiCl or $HgCl_2$	Poor	Fair
tert-Amyl alcohol	LiCl or $HgCl_2$	Poor	Fair
n-Amyl butyrate	LiCl or $HgCl_2$	Poor	Fair
Ethylene dichloride	LiCl or $HgCl_2$	Poor	Fair
Benzyl chloride	LiCl or $HgCl_2$	Poor	Fair
Methylethyl ketone	LiCl or $HgCl_2$	Poor	Good
Methylhexyl ketone	LiCl or $HgCl_2$	Poor	Poor
Acetonylacetone	LiCl or $HgCl_2$	Poor	Good
n-Butyl alcohol, benzene, carbon tetrachloride (equal parts)	LiCl	Fair	Good

Table III. Titration of Pure Acids in Solvent

Benzoic acid, gram	0.0225	0.0212
Stearic acid, gram	0.0386	0.0353
Normality of base	0.106	0.106
Base required, calcd. for:		
Benzoic acid	1.75	1.65
Stearic acid	1.30	1.20
Blank	0.50	0.50
Total	3.55	3.35
Base used in titration	3.60	3.30
Difference, per cent	0.14	0.15
Maximum value of Δma. per cc. of base	110	100

Experimental Results

Pure Acids. Weighed amounts of benzoic and stearic acids were dissolved in the solvent mixture; electrometric titration was conducted in the usual way. The detailed data are given in Table III; the course of the titration may be followed in Figure 5. The indication of the end point is very clear; the

observed results differ only about 0.15 per cent from the calculated values.

Oils Containing Pure Acids. Oils containing definite amounts of stearic, oleic, and picric acids, singly or in combination, were titrated using the electrometric method and also the A. S. T. M. procedure. The results agreed reasonably well with each other and with the calculated values; these data are shown in Table IV. The average difference of the electrometric indication from the calculated value was about 7 per cent; that for the A. S. T. M. reading about 11 per cent. Neutralization numbers on duplicate samples may be checked within 0.2 per cent by the electrometric method.

Most electrometric titrations of polybasic acids or mixtures of acid furnish more than one end point, but the present method gives only one; this may be regarded as a desirable characteristic in the titration of oxidized oils having present a variety of acidic constituents.

Table IV. Titration of Oils Containing Definite Amounts of Organic Acids

Acid Present	Equivalent KOH	Total KOH	KOH Found A. S. T. M.	KOH Found Electrometric	Deviation A. S. T. M.	Deviation Electrometric
	Mg./g.	*Mg./g.*	*Mg./g.*	*Mg./g.*	%	%
Stearic	0.317	0.317	0.382	0.274	20	14
Stearic	0.818	0.818	0.885	0.724	8	11
Stearic	1.55	1.55	1.62	1.45	5	6
Stearic	0.400	...	...	...	..	..
Oleic	0.434	0.834	0.909	0.846	9	1
Stearic	0.804	...	...	...	..	..
Oleic	0.832	1.64	1.39	1.51	15	8
Blank	...	...	0.106	0.060	..	..
Picric	0.65	...	...	...	..	..
Oleic	1.91	...	...	...	..	..
Stearic	6.24	8.80	9.54	9.19	8	4

Oxidized Oils. Duplicate determinations were run on over a hundred oil samples obtained from engines operated by the Department of Mechanical Engineering. The results were reproducible within 10 per cent; this variation may be attributed to the difficulties of sampling sludged oils, to the less marked end points, and probably to other factors. Figure 5 demonstrates the relative values of Δma. per cc. of base added for some oxidized oils and for oils to which benzoic and stearic acid had been added. The smaller rate of change of current at the equivalence point is probably due to the low ionization constants of petroleum acids as compared even to the relatively weak pure acids mentioned.

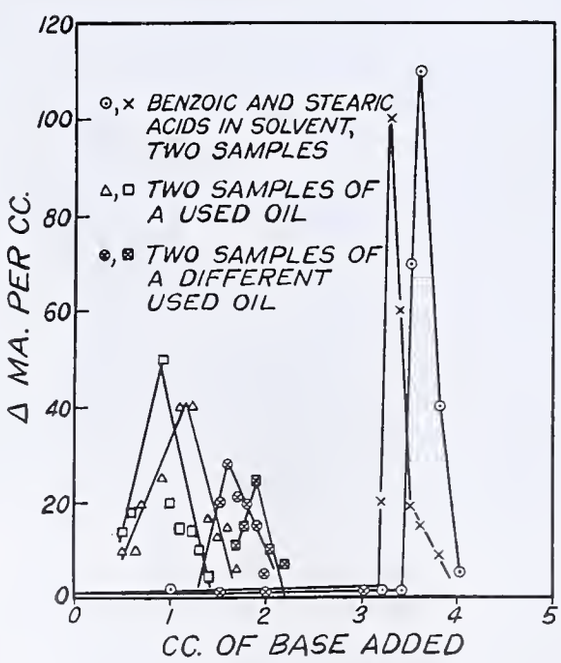

Figure 5. Comparison of Inflections Obtained with Petroleum Acids to Those Shown by Mixtures of Benzoic and Stearic Acids

The neutralization numbers of many of the oxidized oils were found also by the A. S. T. M. method (*2*); these are generally lower than those determined electrometrically for the same oils, especially when deterioration was extensive. Illustrative data are found in Figure 6. It is considered that the electrometric procedure for used oils is the more reliable, inasmuch as the acids in the sludge are taken into account. Sludge is soluble in the liquid mixture used for electrometric titration but not in the mixture of alcohol and water employed in the A. S. T. M. procedure.

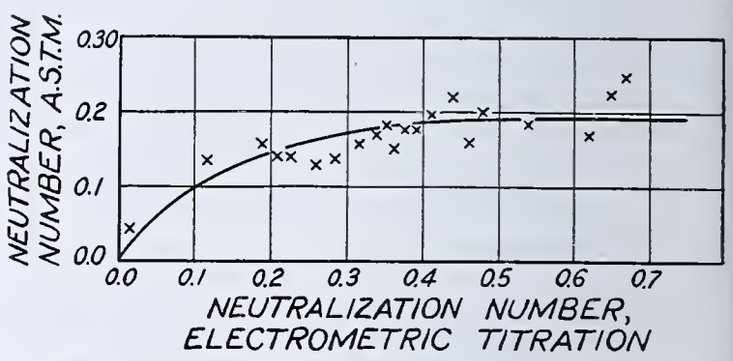

Figure 6. Comparative Neutralization Numbers of Used Oils

The acid content of a lubricating oil under service conditions frequently becomes larger along with increases in Conradson carbon residue value, viscosity, and sludge formation, regular curves being obtained when the quantities mentioned are plotted against acidity. In such cases it may be convenient to follow the deterioration of the oil by determining its neutralization number from time to time during the progress of an engine test.

Summary

An electrometric method using tungsten-platinum electrodes has been developed for the estimation of acids in oxidized petroleum oils. The used oil is dissolved in a mixture composed of equal parts by volume of isoamyl alcohol, benzene, and carbon tetrachloride and saturated with lithium chloride. The base is prepared by dissolving sodium in isoamyl alcohol.

Results for pure organic acids dissolved in solvent are reproducible within 0.2 per cent; the average difference of the observed from the calculated values is 7 per cent. Check determinations on used oils have a maximum deviation of 10 per cent.

Acknowledgment

The technical assistance of E. M. Fry, R. H. McCormick, and G. E. Woods in constructing the apparatus and obtaining data is appreciated. This work was a part of the research program of the Pennsylvania Grade Crude Oil Association and is published with its permission and that of the School of Chemistry and Physics of The Pennsylvania State College.

Literature Cited

(1) Am. Soc. Testing Materials, Rept. Comm. D-2, "Standards on Petroleum Products and Lubricants," p. 25, Sept., 1936.
(2) *Ibid.*, p. 224.
(3) Evans, R. N., and Davenport, J. E., Ind. Eng. Chem., Anal. Ed., **8**, 287 (1936).
(4) Holt, M. L., and Kahlenberg, L., *Trans. Am. Electrochem. Soc.*, **57**, 361 (1930).
(5) Ralston, R. R., Fellows, C. H., and Wyatt, K. S., Ind. Eng. Chem., Anal. Ed., **4**, 109 (1932).
(6) Shenk, W. E., and Fenwick, F., *Ibid.*, **7**, 195 (1935).
(7) Seltz, H., and McKinney, D. S., Ind. Eng. Chem., **20**, 542 (1928).
(8) Seltz, H., and Silverman, L., *Ibid.*, Anal. Ed., **2**, 1 (1930).
(9) Wooten, L. A., and Ruehle, A. E., *Ibid.*, **6**, 449 (1934).

Received August 12, 1937.

Qualitative Determination of Glycerol and Ethylene Glycol in Dilute Aqueous Solution

A. G. HOVEY AND T. S. HODGINS, Beck, Koller & Company, Inc., Detroit, Mich.

BECAUSE alkyd resins contain polyhydric alcohols, detecting the nature of the polyhydric alcohol is essential. The customary procedure in analyzing alkyd resins is to determine the weight of phthalic anhydride or other polybasic acids and the weight of fatty acids or other modifiers leaving the glycerol to be determined by difference (*5*, *6*). As long as glycerol was the only polyhydric alcohol used, this determination by difference was allowable though not satisfactory. Today, however, ethylene glycol is available and relatively cheap and therefore we must expect its presence in many alkyd resins. There seem to be no references in the literature to an easy and sensitive qualitative determination of ethylene glycol in dilute aqueous solution. Qualitative tests for glycerol in dilute solutions have been described by Mulliken (*8*), Gardner (*3*), and others, but in these tests there is still much to be desired, particularly when it is necessary to distinguish glycerol from ethylene glycol.

Heretofore in attempting to determine whether glycerol or ethylene glycol is present, many tedious procedures have had to be overcome. The main detectable differences between glycerol and ethylene glycol have been in their physical properties. Differences between these two polyhydric alcohols in aqueous solutions have been determined by comparison of such physical properties as specific gravity (*1*), refractive index (*4*), boiling point (*2*), freezing point, etc. In actual practice, however, there is usually so much water present that concentrating the solution of a polyhydric alcohol involves as much difficulty and tediousness as the regular manufacturing process for concentrating glycerol (*9*). This excess of water in the analytical sample is due to the fact that the resin sample has first to be acidified after the saponification so as to precipitate out fatty acids, phthalic acid, or other polybasic acids. After this separation a steam distillation (*7*) is necessary to separate the polyhydric alcohol from the salts, which are formed by acidification of the saponified sample.

The literature has been searched for a qualitative colorimetric method for determining glycerol and ethylene glycol in dilute solution; such a method would save the trouble of concentrating the distillate. A test has been described by Mulliken (*8*) which is essentially as follows: One drop of glycerol is dissolved in 2 cc. of cold water, and 5 drops of 1 per cent aqueous solution of pyrogallol and 2 cc. of concentrated sulfuric acid are added. Upon shaking and heating quickly to boiling, the boiling being held 20 to 25 seconds before cooling, a coloration appears in a 15-cm. (6-inch) test tube upon dilution to 20 cc. with strong alcohol. The coloration is a purplish red, which fades in a very few minutes on standing. The authors have found that this purple coloration is also observed when using ethylene glycol in place of glycerol. In both tests, the purple coloration turns to a light brown upon standing. In the case of ethylene glycol the color seems to fade somewhat faster than that of glycerol, but unfortunately this is not a distinguishing test.

Experimental

Using Mulliken's work as a starting point, the authors have carried the work further, using homologs of phenol under both acid and alkaline conditions. A summary of the results is shown by Table I.

TABLE I. COLOR REACTIONS OF PHENOLIC BODIES WITH GLYCEROL AND ETHYLENE GLYCOL

Reaction	Glycerol	Ethylene Glycol
Phenol	WW[a]	WW[a]
Phenol + NaOH (25% aqueous solution)	WW	WW
Phenol + NH_4OH (sp. gr. 0.90)	WW	WW
Phenol + H_2SO_4 (concd.)	WW	WW
Cresol	WW	WW
Cresol + NaOH	WW	WW
Cresol + NH_4OH	WW	WW
Cresol + H_2SO_4	WW	WW
Catechol	WW	WW
Catechol + NaOH	Green	Light brown
Catechol + NH_4OH	Pale green	Pale green
Catechol + H_2SO_4	Blood orange	WW
Resorcin	WW	WW
Resorcin + NaOH	Purple	Light green
Resorcin + NH_4OH	Purple	Purple
Resorcin + H_2SO_4	Dark green	Light yellow-green
Hydroquinone	WW	WW
Hydroquinone + NaOH	Pale yellow	Brown
Hydroquinone + NH_4OH	Brown-yellow	Brown-yellow
Hydroquinone + H_2SO_4	WW	WW
Pyrogallol	WW	WW
Pyrogallol + NaOH	Red	Orange
Pyrogallol + NH_4OH	Pale yellow	Pale yellow
Pyrogallol + H_2SO_4	Purple to brown	Purple to light brown

[a] Water-white.

Table I, while it shows the possibilities of color differences between glycerol and ethylene glycol, is subject to variations if certain specific proportions and conditions are not observed. Catechol appears to give the most reliable and satisfactory color differences, especially when in an acid medium.

Chemicals

The catechol (Eastman Kodak Company No. 604) had a melting point of 103° to 104° C. The other phenols were also from the Eastman Kodak Company.

The glycols were from the Carbide and Carbon Chemicals Company and possessed the following properties:

	Specific Gravity	Refractive Index
Ethylene glycol	1.1176 @ 15/15° C.	1.4311 @ 20° C.
Diethylene glycol	1.1185 @ 20/20° C.	1.4475 @ 20° C.
Triethylene glycol	1.122–1.127 @ 20/20° C.	
Propylene glycol	1.0381 @ 20/20° C.	

The trimethylene glycol was obtained from the Procter & Gamble Company and had the following properties:

Specific gravity	1.0603
Ash, %	0.002
Titer	2.0
Moisture, %	1.6
Purity, %	96.0
Color	14 Yellow
	2 Red

The glycerol C. P. had a specific gravity of 1.265 at 15° C.

The sulfuric acid C. P., specific gravity 1.84 (A. C. S. specifications), was from Baker & Adamson. Ammonium hydroxide was Baker's C. P. grade (sp. gr. 0.90). Sodium hydroxide was Merck's C. P. (A. C. S. specifications).

Procedure

The best conditions for the color determination of glycerol appear to be as follows:

Place the following ingredients in a 15-cm. (6-inch) test tube in the order given: (1) 3 ml. of the solution to be tested, (2) 3 ml. of 10 per cent aqueous solution of catechol (freshly prepared, since such solutions color with age even if kept in a dark bottle), and (3) 6 ml. of concentrated sulfuric acid.

Heat the tube (gently) for about 30 seconds.

If glycerol is present, a blood-orange coloration will quickly appear at about 140° to 145° C. The color so produced is stable over a period of many days, unlike Mulliken's test which changes color after a few minutes.

With ethylene glycol, diethylene glycol, and ethyl alcohol, no color is formed. With other polyhydric alcohols, distinctive colors (see Table IV) are produced, which may serve as a means of identification.

It is important not only that the order of mixing be followed as above, but also that the tube containing the solution to be tested and the catechol solution be well shaken before the addition of the concentrated sulfuric acid. Merely mixing the three materials and then shaking and warming produces unreliable results—i. e., in the case of ethylene glycol, a very faint pink color may be observed instead of the water-white condition which is obtained when the correct order of procedure is followed. In the case of glycerol, however, merely mixing and warming the three materials do not interfere with the characteristic blood-orange coloration.

Since the test for ethylene glycol is negative (water-white color), a confirmatory test is desirable. This may be accomplished by color differences obtained through the use of polyhydroxy phenols in the presence of sodium hydroxide (see Table I).

Interfering Substances

Since a concentration approaching 50 per cent of sulfuric acid is employed in the color test for glycerol, it seemed possible that the glycerol might be dehydrated to form acrolein:

$$HOCH_2{\cdot}CHOH{\cdot}CH_2OH + H_2SO_4 \longrightarrow CHO{\cdot}CH{\cdot}CH_2 + 2H_2O$$

However, substituting acrolein for glycerol in the test, a purple flocculent precipitate is formed which is readily distinguished from the blood-orange color of glycerol.

Aldehydes, in general, give color reactions with catechol and sulfuric acid (see Table II).

The presence of any of these aldehydes would tend to interfere with the test for glycerol, but with the exception of acrolein the chances of their being present are fairly remote. This test with catechol and sulfuric acid, since it produces a flocculent purple precipitate with acrolein and obscures the blood-orange glycerol color, serves as the basis for a good color test for determining acrolein in the presence of glycerol.

Table II. Color Reactions of Aldehydes by the Catechol–Sulfuric Acid Method

No.	Aldehyde	Color
A-1	Acrolein	Purple flocculent precipitate
A-2	Formaldehyde	Purple turning to brown
A-3	Acetaldehyde	Purplish red
A-4	Benzaldehyde	Red-orange

Concentration Range

The test, as outlined above, was tried out at various concentrations in an attempt to establish the lower limit of sensitivity for the concentration of the polyhydric alcohol. It was found to be extremely sensitive, as is shown by Table III.

Since it works so well on glycerol in the presence of ethylene glycol, the test was studied to see what other color differences might be observed if the constitution of the alcohol was varied from monohydric to hexahydric. These color differences are shown in Table IV.

A number of other compounds which were not phenolic were also tried for color differences. The most interesting color differences which were observed are shown in Table V.

Discussion

It seems possible by means of a series of dilutions of the unknown and by comparison with a color standard to obtain semiquantitative results for the glycerol content. The authors are working on this possibility and hope to make the facts available soon.

Table III. Effect of Molar Concentration on Colorimetric Determination of Glycerol in Aqueous Systems

Molar Concentration	Parts per 1000	Percentage	Color
		Glycerol	
1	92	9.2	Blood-orange
0.5	46	4.6	Blood-orange
0.25	23.0	2.30	Blood-orange
0.125	11.5	1.15	Blood-orange
0.0625	5.75	0.575	Blood-orange
0.03125	2.875	0.2875	Blood-orange
0.015625	1.4375	0.14375	Light pink[a]
		Ethylene Glycol	
1	62	6.2	Water-white
0.5	31	3.1	Water-white
0.25	15.5	1.55	Water-white
0.125	7.77	0.777	Water-white
0.0625	3.88	0.388	Water-white
0.03125	1.94	0.194	Water-white
0.015625	0.97	0.097	Water-white

[a] 0.0156 *M* would indicate the limit of this colorimetric test. The last full deep red coloration is at double this molar concentration—i. e., 0.03125 *M*.

Table IV. Color Differences for Alcohols Varying in the Number of Hydroxyl Groups

No.	—OH Groups	Alcohol	Color
A	1	Ethyl alcohol	Water-white
B	2	Ethylene glycol	Water-white
C	2	Diethylene glycol	Water-white
D	2	Propylene glycol	Faint pink
E	2	Triethylene glycol	Faint pink
F	2	Trimethylene glycol	Dark brown
G	3	Glycerol	Blood-orange
H	4	Pentaerythritol	Dark purple-red
I	4	Erythritol	Faint pink
J	6	Mannitol	Red-orange
K	6	Sorbitol (neutral)	Blue
L	6	Sorbitol (H_2SO_4)	Faint pink

Table V. Color Determination of Glycerol and Ethylene Glycol with Substances Other than Straight Phenols

		Glycerol	Ethylene Glycol
R-3	*p*-Aminobenzoic acid + H_2SO_4	Dark brown	Light brown to orange
R-9	*n*-Dichlorosuccinic acid + EtOH	Straw yellow	Water-white
R-10	*n*-Dichlorosuccinic acid + EtOH + H_2SO_4	Dark brown	Pale straw
R-21	National Scarlet R salt + NaOH	Orange	Yellow
R-22	National Scarlet R salt + H_2SO_4	Yellow	Pink
R-24	National Red G salt + NaOH	Yellow-orange	Yellow
R-25	National Red G salt + H_2SO_4	Yellow-pink	Pink
R-31	National Blue BN salt + H_2SO_4	Green-yellow	Pink-yellow
R-32	National Orange GC salt	Yellow	Yellow-orange

Summary

A color test using catechol and sulfuric acid for the qualitative determination of glycerol in the presence of ethylene glycol is described which is sensitive to concentrations approaching 0.0156 *M* (or 1 part in 700).

The test may also be applied in the detection of other polyhydric alcohols which give specific color reactions with the reagents.

The compounds which produce the most color differences between glycerol and ethylene glycol are the polyhydroxy phenols.

Aldehydes, if present, interfere with the catechol–sulfuric acid test for glycerol.

The test may also be applied in the detection of acrolein in the presence of glycerol.

Acknowledgment

The authors wish to thank E. J. Boehm and S. V. Cottrell of the National Aniline and Chemical Company for the samples used in Table V and for their kind suggestions, and also to thank Beck, Koller & Company, Inc., for permission to publish this article.

Literature Cited

(1) Bossart and Snoddy, Ind. Eng. Chem., 19, 506–10 (1927).
(2) Carr, Townsend, and Badger, *Ibid.*, 17, 643 (1925).
(3) Gardner, "Physical and Chemical Examination of Paints, Varnishes, Lacquers and Colors," 7th ed., p. 957, Washington, 1935.
(4) Hoyt, Ind. Eng. Chem., 26, 329 (1934).
(5) Kappelmeier, *Farben-Ztg.*, 40, 1141 (1935); *Paint, Oil Chem. Rev.*, pp. 20–4 (June 10, 1937).
(6) Kavanaugh, Ind. Eng. Chem., Anal. Ed., 8, 397 (1936).
(7) Lawrie, "Glycerol and the Glycols," pp. 144–50, New York, Chemical Catalog Co., 1928.
(8) Mulliken, "Identification of Pure Organic Compounds," Test No. 816, p. 169, New York, John Wiley & Sons, 1904.
(9) Rogers, "Industrial Chemistry," 4th ed., Vol. II, Chapter XXXI, New York, D. Van Nostrand Co., 1926.

Received September 23, 1937. Presented before the Division of Paint and Varnish Chemistry, Organic Plastics Section, at the 94th Meeting of the American Chemical Society, Rochester, N. Y., September 6 to 10, 1937.

Determination of Butenes in Refinery Gases

WALLACE A. McMILLAN, The Texas Co., Beacon Laboratory, Beacon, N. Y.

PUBLISHED methods for the analysis of hydrocarbon gases are notably inadequate in the case of the group containing four carbon atoms. This is to be expected when it is realized that no fewer than seven compounds occur in this group (Table I) six of which are usually found in gases from cracking operations; yet the total boiling range of the group is only some 15° C. (27° F.).

In general, there are only three methods available in the literature for the analysis of the C-4 hydrocarbons: bromination, reactions with sulfuric acid, and direct low-temperature fractionation. These are further subdivided into specific methods varying concentrations or reagents, methods of fractionation, and times of contact. The only thing all three possess in common is definite unreliability. Most of them have been based on relatively few experiments, using particular types of gases for which they may or may not be satisfactory. Even in the few cases where relatively pure gases were used, the mixtures were made with air or other inert gas, and in most cases the authors admit that inclusion of butanes, diolefins, or other olefins will spoil the results.

Perhaps the most used, but certainly not the best of the methods, depends on the selective absorption of isobutene in 62 to 64 per cent sulfuric acid followed by absorption of the normal butenes in 87 per cent acid. For low concentrations of isobutene such as are usually found, the method has been more or less discredited even by those responsible for its development (*10*), but is still used because no better one is available and at least an approximate measure is obtained in most cases.

Work done in this (*9*) and other laboratories over the past several years has indicated the unreliability of selective acid absorption. As a final test before this work was started, a "butene concentrate" was submitted to four laboratories to see if their variations of the sulfuric acid method would give reproducible results. The results obtained by six methods gave a spread on the "standard" sample greater than the amount of isobutene present and even the individual methods varied as much as 7.0 per cent on the basis of total gas on check samples.

Methods depending on the production of dibromides, separation by fractional distillation, and determination of the individual olefins by prolonged low-temperature fractional distillation, after regeneration by zinc (*3, 5*), are also of doubtful value as far as results are concerned, not to mention the size of samples and excessive times required. It has been the author's experience that it is almost impossible to distill the dibromides without some decomposition even at low pressures. The regeneration of butenes by zinc has been shown to result in mixtures in all cases (*13*) and the low-temperature fractional distillation of iso- and 1-butene, boiling less than 1° C. apart, even at extremely slow rates, would require an efficiency far greater than that exhibited by ordinary laboratory columns (*7*).

The best of all the bromide methods (*2*) is that based on measurement of the reaction rates of the pure dibromides with potassium iodide in methyl alcohol. Even this is only accurate to 2.0 per cent, according to the authors, and fails when isobutene is present.

The proposed method calls for the separation of two cuts by exact low-temperature fractional distillation (*8*). The first, containing isobutane, isobutene, and 1-butene, is subsequently hydrogenated (*9*) over a nickel catalyst to obtain the total unsaturation of the cut and the isobutene is then determined separately by reaction with anhydrous hydrogen chloride gas. The second, containing all the *n*-butane and 2-butenes, is also hydrogenated for total unsaturation and the residual gas is condensed into a bulb and treated with bromine at low temperatures. The dibromides are subsequently left as a residue on warming the mixture and are determined by measurement of the refractive indices. All the steps except the last are accurate to ±0.15 per cent at least. Thus far no reason has been found for determining the individual 2-butenes with an accuracy greater than 3.0 per cent, of which the method is capable. If more accurate determination is desired the method of Dillon, Young, and Lucas (*2*) can be used, but in that case a much larger sample is needed. 1,3-Butadiene, if present, will be found with the iso- and 1-butenes and should be determined separately (*4, 11*) and the calculations corrected accordingly.

Table I. Four-Carbon Hydrocarbons

	B. p. ° C.
Isobutane	−12.2
Isobutene	− 7.6
1-Butene	− 6.8
1,3-Butadiene	− 4.7
n-Butane	+ 0.4
trans-2-Butene	+ 0.5
cis-2-Butene	+ 3.2

Apparatus

The low-temperature fractional distillation apparatus (*7, 8*) and the hydrogenation unit (*9*) have been described in previous papers.

The apparatus for the addition of hydrogen chloride is shown in Figure 1. It consists of two 50-ml. rebuilt distillation flasks, *A* and *A'*, with individual check valve manometers, *B* and *B'*, joined through a gold-plated stopcock, *C*. Two other gold-plated stopcocks, *D* and *E*, connect the apparatus to the distillation or introductory unit, *F*, and to the hydrogen chloride generator, *G*, respectively. The entire apparatus is of Pyrex glass except as shown in the sketch.

Gold-plated stopcocks are essential for the apparatus; no other cocks will hold the vacuum and the hydrogen chloride vapors under the condition of the analysis. They require only a thin film of vaseline or Burrell stopcock grease. Other lubricants,

such as Airco HyVac and Cellogrease or compounds containing rubber, cannot be used, since they also react with the hydrogen chloride, causing leaks and giving poor results. Care should be exercised not to scratch the gold-plating, which is very soft, and any tendency on the part of the stopcock to "drag" should be corrected immediately by relubrication.

The bulbs are carefully calibrated to the nearest 0.1 ml. by displacing air from a calibrated buret. Manometers are read to the nearest 0.5 mm. The apparatus should be held at as constant a temperature as possible and protected from drafts.

The hydrogen chloride generator is a 45-cm. (18-inch) drying tower filled with calcium chloride in the drying section, except for a 2.5-cm. (1-inch) layer of barium chloride crystals on the top. Glass-wool plugs are placed at both ends of the drying section.

Fifty grams of C. P. ammonium chloride crystals are added dry to the bottom section and the dropping funnel is inserted with a rubber stopper as shown. Both the top and bottom stoppers closing the openings of the drying tower are sealed in place with sealing wax, after which the whole assembly is tested to make sure that it is vacuum-tight. When ready for use, approximately 25 ml. of concentrated C. P. hydrochloric acid are added through the funnel to the evacuated scrubber and then C. P. concentrated sulfuric acid is added slowly, drop by drop, allowing time for reaction, until the pressure is brought to atmospheric as shown by the manometer, B'. The generator is then ready for use.

The generator described above is completely safe if the instructions are followed. After once the pressure has been built to atmospheric, it is usually sufficient to add 2 to 3 drops of acid each time hydrogen chloride is removed for an analysis. At the end of the day's runs any excess pressure is vented carefully through the acid-inlet stopcock and the generator is ordinarily connected to the bulb, A', with C closed, so that the manometer can act as a safety valve if necessary. The general reaction is so fast and complete that pressure is developed only immediately after addition of the acid.

With the generator filled with dry hydrogen chloride and cock E closed, the remainder of the apparatus is evacuated as completely as possible. Stopcock C is then closed and a pressure of about 450 or 500 mm. (maximum) of hydrogen chloride is built up in A' by cracking cock E slightly. E is then closed and the pressure read on the balanced manometer, B', using a constant reference point (900 mm.) for the leg connected to bulb A'.

Gas is admitted to bulb A from the distillation or scrubbing unit, F, until the pressure reaches a maximum of 400 mm. (absolute), at which point D is closed and the pressure is read on B.

Both mercury bulbs are then lowered so that the open leg stands at about 100 mm. on the manometer and C is opened, connecting A and A'. Bulb A is then immersed in liquid air or carbon dioxide–gasoline until the contents of both bulbs are condensed in A.

If complete condensation occurs (in the presence of no noncondensables) the gas is allowed to revaporize immediately, but if only partial condensation occurs, pressure is again allowed to build up by warming the bulb with the hands. Then the gases are again recondensed. This is necessary to sweep unreacted gas into the bulb where it can be condensed. In the special case where isobutene is determined on the original sample, if too small a pressure reduction is obtained on immersion in liquid nitrogen, owing to extra large amounts of hydrogen or air in the sample, it will be necessary to eliminate the noncondensables by distillation.

After the gases are condensed, the liquid nitrogen is removed and the solid hydrogen chloride allowed to melt. The bulb is then immersed in water at approximately 37.78° C. (100° F.), and the contents are completely vaporized. After the bulb again comes to room temperature both manometers are set back to the reference points and the new readings are taken. The contraction in volume is a direct measure of the amount of isobutene present.

A typical calculation is shown:

Barometer	= 755.5 mm.
Reference point on manometers	= 900.0 mm. (zero 144.5)
Original reading, HCl	= 627.5 mm.
Original reading, sample	= 572.5 mm.
Final reading, both manometers	= 524.5 mm.

Absolute pressures:

$$\text{HCl} = \begin{array}{r} 627.5 \\ 144.5 \\ \hline 483.0 \end{array} \qquad \text{Sample} = \begin{array}{r} 572.5 \\ 144.5 \\ \hline 428.0 \end{array} \qquad \text{Final} = \begin{array}{r} 524.5 \\ 144.5 \\ \hline 380.0 \end{array}$$

$$\text{HCl} - \frac{483.0 \times 80.5 \text{ (volume of bulb)}}{755.5} = 51.5 \text{ ml.}$$

$$\text{Sample} - \frac{428.0 \times 82.7 \text{ (volume of bulb)}}{755.5} = 46.8 \text{ ml.}$$

$$\text{Final} - \frac{380.0 \times 163.2 \text{ (combined volumes)}}{755.5} = 82.0 \text{ ml.}$$

$$51.5 + 46.8 - 82.0 = 16.3 \text{ ml. contraction}$$

$$\frac{16.3}{46.8} \times 100 = 34.8 \text{ per cent isobutene}$$

The product of the reaction between isobutene and hydrogen chloride boils well above room temperature and under ordinary conditions would condense out in the apparatus. For this reason maximum pressures have been established and are given above. Even with pure isobutene and the given pressures no condensation will occur, but by going above these pressures high results may be obtained.

Experimental

For the purpose of this work an accuracy of ±0.1 per cent of the individual components was desired, with the exception of the isomeric 2-butenes. It was realized that in order to attain such accuracy it would be necessary to separate the four-carbon group from the remainder of the gas by accurate low-temperature fractional distillation. This step had previously been worked out to the desired accuracy (*7*). However, the succeeding step of separating the four-carbon group into two groups had not been worked out completely for gases containing olefins.

By synthesizing known mixtures of pure hydrocarbons, as in previous work (*7*, *9*), it was found that making the distillation cuts at the mid-temperature point between iso- and *n*-butanes, as is usually done in such analyses, did not give good results. Cutting at the mid-temperature point between 1-butene and *n*-butane also gave poor results. However, if the distillation was cut at a point midway between these two cut points much better results were obtained in every case.

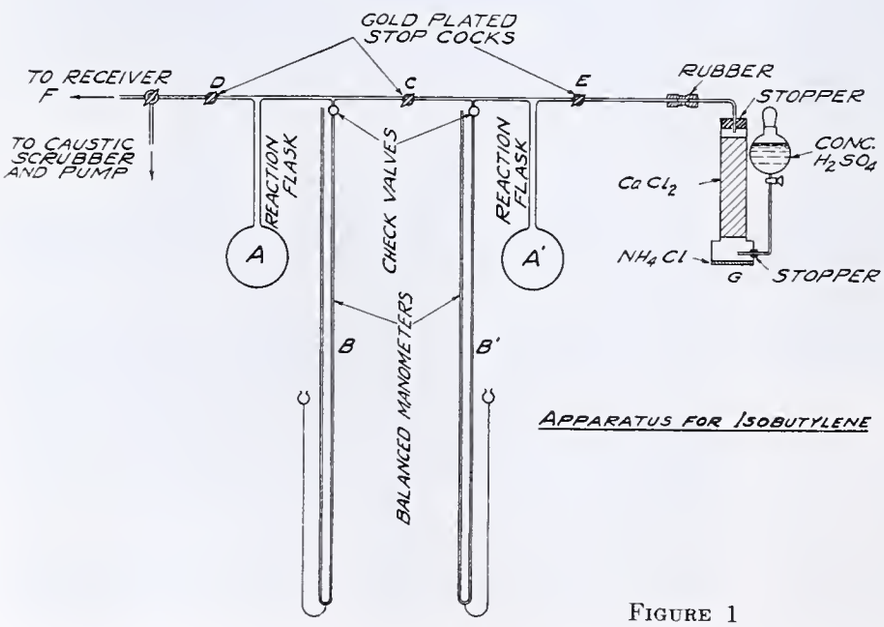

FIGURE 1

SEPARATION BY DISTILLATION. Preparation of the gases isobutane, butane, and 1-butene has been described in previous papers (*7*, *9*).

Isobutene was prepared by dehydration of redistilled tertiary butyl alcohol over oxalic acid and then fractionated and treated the same as 1-butene.

1,3-Butadiene was prepared by the method of Kistiakowsky (*6*), then scrubbed, dried, and refractionated to constant boiling point and vapor pressure. The boiling point was the same (−4.5° to −4.6° C.) as that obtained by Kistiakowsky for his best sample. There is some evidence to indicate that this is not pure 1,3-

butadiene but a constant-boiling mixture. However, this has not been definitely proved as yet, mainly because of the general unreliability of methods for the determination of 1,3-butadiene.

Mixed 2-butenes were prepared by dehydrating a mixture of primary and secondary alcohols with 60 per cent sulfuric acid according to the method of Young and Lucas (*12*). The resulting butenes were fractionated as well as possible into two cuts corresponding to the *cis* and *trans* isomers, which were then brominated at about 0° C. (32° F.). After washing with caustic and drying, the dibromides were twice fractionated at low pressures and the butenes regenerated by zinc in ethyl alcohol. Subsequent refractionation at low temperatures indicated that pure *cis* and *trans* isomers could not be produced by this method, but the resulting mixes were satisfactory for testing the reproducibility of the refractive indices using the method indicated.

As in previous work, all synthetic mixtures were made to accurately known composition by blending by condensation in a calibrated and carefully evacuated all-glass system (*9*).

For the majority of the work on the separation of the groups by low-temperature fractional distillation, four-component mixtures were used consisting of isobutane, isobutene, 1-butene, and *n*-butane. Typical results on mixtures of this type are shown in Table II, using the average cut point of −4.5° C. (+23.9° F.) described above. The first three components of the mixtures correspond to the first cut and the *n*-butane corresponds to the second cut.

Table II. Separation by Distillation

Run No.	Butane Synthesized	Butane Found	Deviation
	%	%	%
1	24.9	24.6	−0.3
2	31.1	30.8	−0.3
3	26.6	26.7	+0.1
4	38.1	38.0	−0.1
5	29.0	29.1	+0.1

Determination of Isobutene. When it had been definitely determined that the isobutane, isobutene, and 1-butene could be separated from the *n*-butane and 2-butenes, it was still necessary to develop a method for separating the iso- and 1-butenes. This was simplified by the hydrogenation method previously worked out, which allows the determination of the combined butenes within an accuracy of 0.1 per cent (*9*). It was then necessary only to determine either 1-butene or isobutene accurately in order to make possible the calculation of the individual components in this group of three hydrocarbons. The only method found which would give the required separation depends on the use of dry hydrogen chloride gas. It is based on an observation by Coffin, Sutherland, and Maass (*1*) that isobutene reacts instantaneously when hydrogen chloride is passed through a liquefied butene mixture, while the other butenes are unaffected. So far as can be determined, these authors never worked out an analytical method based on the observation.

The method developed in this work is essentially simple. It requires only that a measured volume of dry hydrogen chloride be mixed with a measured volume of hydrocarbon gas containing isobutene and the resulting mixture be condensed and then revaporized. The contraction in volume is a direct measure of the isobutene present according to the reaction:

$$\begin{array}{ccccc} \text{iso}C_4H_8 & + & HCl & = & C_4H_9Cl \\ (1\text{ volume}) & + & (1\text{ volume}) & = & (1\text{ volume}) \end{array}$$

The reaction is specific, so far as the author has been able to determine, for isobutene. Tests made with pure ethylene, propylene, 1-butene, mixed 2-butenes, 1,3-butadiene, butanes, and acetylene have not shown any reaction with hydrogen chloride when alone or mixed. In the presence of isobutene, no reaction other than that due to isobutene has taken place.

Some typical results are shown in Table III.

Table III. Determination of Isobutene

Components Present	Isobutene Actual	Isobutene Found
	%	%
Isobutene	100.0	100.0
1-Butene	None	None
Isobutene, 1-butene	34.8	34.8
Isobutene, 1-butene	42.3	42.0
Isobutene, 1-butene	42.3	42.4
Isobutene, 1-butene	66.3	66.3
1,3-Butadiene	None	None
Isobutene; 1,3-butadiene[a]	28.7	28.2
Isobutene; 1,3-butadiene	45.6	45.5
Acetylene	None	None
Mixed 2-butenes	None	None
(Iso- and 1-butenes) (Iso- and *n*-butanes)		
1	19.7	19.6
2	32.7	32.8

[a]Extremely small sample. Possible error in synthesis.

The total time per analysis averages less than 15 minutes. The reaction is instantaneous and the time required is taken up mostly by allowing the bulbs to come back to temperature before the final readings are made.

In those analyses where only the isobutene is required, it can be determined directly on the original gas with the same degree of accuracy, providing no pentenes or higher homologs are present having tertiary carbon linkages. However, in that case, the gas should be freed from hydrogen sulfide by soda lime and dried by calcium chloride.

Determination of 2-Butenes. The combined 2-butenes are easily determinable in the presence of *n*-butane to 0.1 per cent, by hydrogenation of the cut as outlined above. The actual determination of the individual *cis* and *trans* isomers, however, is not as easy and, as far as can be determined at the present time, is not necessary for most petroleum gases. For purposes of estimation, the following method has been worked out. It allows an accuracy of 3.0 per cent in only a few minutes' time, which is good compared to the estimated accuracy of other more exact methods (*2*) which take much longer and require much larger quantities of gas.

Total unsaturation of the butane cut is determined as usual and the residual gas in the distillation receiver is then recondensed into a bulb using liquid nitrogen. This is best accomplished by having a stopcock sealed to one of the receivers with a male interchangeable ground-glass joint sealed to it, forming an L-joint pointing downwards. The female joint is then sealed off at the lower end, making a closed-off bulb which can be detached from the apparatus. At the beginning of the analysis this bulb is completely evacuated and closed off, or the bulb is calibrated into the apparatus and the cock is normally left open.

Once the butane-butenes are condensed, the stopcock is closed and the joint disconnected, while the tube is kept cold. About 5 drops of pure liquid bromine are then added slowly from a 1-ml. pipet and the reaction is allowed to take place at as low a temperature as possible. No evidence of hydrobromic acid has been detected when the brominations were carried out at low temperatures. No attempt is made to brominate completely all the butenes present.

As soon as all the bromine has reacted, the tube is set aside and allowed to come to room temperature. It is then put in a boiling water bath and the last trace of butane is completely eliminated. After cooling, the tube is held in a 25° C. water bath for a few minutes and the refractive index is determined as accurately as possible at that temperature by an Abbé refractometer. Only 2 drops of liquid are required and a reproducibility of one in the fourth decimal place can readily be attained. This corresponds to an accuracy of 3.0 per cent using the constants (*2*) for the dibromides of

	Refractive Index at 25° C.
Meso-2,3-dibromobutane (from *trans*)	1.5092
Racemic-2,3-dibromobutane (from *cis*)	1.5125

and assuming that the laws of mixtures hold.

As a check on the validity of this last assumption, mixtures were made of the impure 2-butenes prepared above. Dibromides prepared from the two materials designated as *cis* and *trans* and their known percentage mixtures as gases, both alone and in the presence of normal butane, gave results typical of those shown in Table IV. For most of the cases the results were within the limit of one in the fourth place on the refractive indices; however, in about 10 per cent of the runs the error was two in the fourth place. In a few cases, where the original mixture was in doubt, the results were much worse than these.

Table IV. Check Results

	Refractive Index at 25° C.	*cis*-2-butene Synthesized	*cis*-2-butene Found
		%	%
Original C[a]	1.5120	..	85.0
Original T[b]	1.5098	..	19.0
52% C + 48% T	1.5110	53.3	54.5
31% C + 69% T	1.5104	39.5	36.5
76% C + 24% T	1.5115	69.1	69.5

[a] *Cis.*
[b] *Trans.*

Summary

A new method is presented for the determination of individual components normally occurring in refinery and cracked petroleum gases. By its use, the individual four-carbon hydrocarbons, with the exception of the individual isomeric 2-butenes, can be determined within an accuracy of better than ±0.15 per cent. No larger gas samples are required than are now used for low-temperature fractional distillation, and the time required is but very little more than for this step alone.

A new gas-reaction analytical method for the determination of isobutene with anhydrous hydrogen chloride has also been developed as a part of the general scheme of analysis, which allows the determination of isobutene in the presence of any other normally gaseous olefin with an accuracy of 0.1 per cent. Twenty to thirty milliliters of gas are normally used and the total time per determination is 15 minutes or less.

Acknowledgment

The author acknowledges the kind permission of The Texas Company to print this article, and the assistance of Howard A. Cole in the preparation and purification of some of the gases required.

Literature Cited

(1) Coffin, Sutherland, and Maass, *Can. J. Research*, **2**, 267 (1930).
(2) Dillon, Young, and Lucas, *J. Am. Chem. Soc.*, **52**, 1953 (1930).
(3) Frey and Huppke, Ind. Eng. Chem., **25**, 54 (1933).
(4) Gooderham, *J. Soc. Chem. Ind.*, **56**, 32T (1937).
(5) Hurd and Goldsby, *J. Am. Chem. Soc.*, **56**, 1812 (1934).
(6) Kistiakowsky, Ruhoff, Smith, and Vaughan, *Ibid.*, **58**, 146 (1936).
(7) McMillan, *J. Inst. Petroleum Tech.*, **22**, 616 (1936).
(8) McMillan, U. S. Patent 2,005,323 (1936).
(9) McMillan, Cole, and Ritchie, Ind. Eng. Chem., Anal. Ed., **8**, 105 (1936).
(10) Marcovitch and Moore, *Natl. Petroleum News*, **23**, No. 41, 33–8 (1931).
(11) Tropsch and Mattox, Ind. Eng. Chem., Anal. Ed., **6**, 404 (1934).
(12) Young and Lucas, *J. Am. Chem. Soc.*, **52**, 1964 (1930).
(13) Young and Winstein, *Ibid.*, **58**, 441 (1936).

Received September 6, 1937. Presented before the Division of Petroleum Chemistry, Symposium on Chemical Utilization of Petroleum Hydrocarbons, at the 94th Meeting of the American Chemical Society, Rochester, N. Y., September 6 to 10, 1937.

Electrometric Titration of Dichromate Glycerol Samples

Chemical Division, The Procter & Gamble Company, Ivorydale, Ohio

For control purposes in soap and glycerol manufacture glycerol is usually determined through the oxidation of a prepared sample by an excess of potassium dichromate in the presence of an excess of sulfuric acid. The most common procedure is to titrate the excess of the dichromate solution, after oxidation is completed, with ferrous sulfate solution using potassium ferricyanide as an external indicator on a spot plate. Randa (*5*) has recently described a method in which the dichromate solution after oxidation is made to volume and used to titrate standard ferrous sulfate solution, using diphenylamine as internal indicator.

For a number of years in the Procter & Gamble laboratories, the excess dichromate after oxidation has been titrated in the the oxidation flask without any transfer or further treatment other than cooling. Ferrous sulfate is used for the titration with an electrometric setup as internal indicator. As far as the authors have been able to learn, the electrometric method has not been used in other laboratories for the titration of the excess dichromate in glycerol determinations, although such a setup has been in use for dichromate–ferrous sulfate titrations in other laboratories, such as some of those of the steel industry (*2*).

In 1922 electrometric titration of practically all routine glycerol samples replaced the use of the spot plate in one of the company laboratories. In the first setup a platinum electrode and calomel half-cell were used with *N* potassium chloride. The ferricyanide spot plate was used only for checkup. In 1935 a bimetallic electrode setup was placed in use in one of the laboratories and the calomel cell was eliminated. Plati-

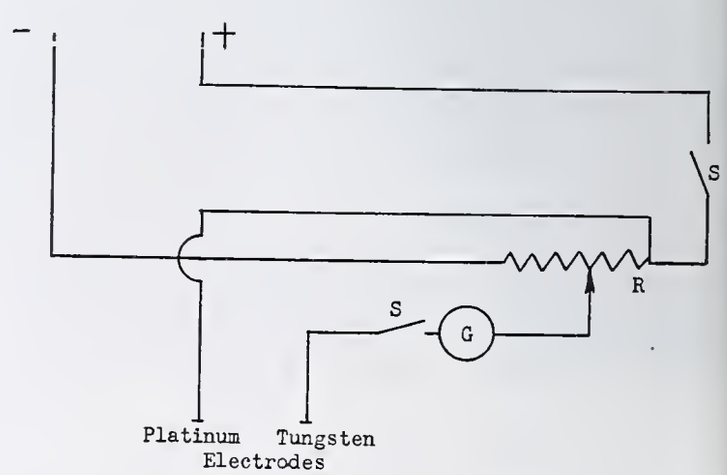

Figure 1. Wiring Diagram

S. Double-pole, single-throw switch
R. Potentiometer
G. Galvanometer
Batteries (4 dry cells in series)

um and nickel electrodes (*1*) were used. 'he nickel electrode was changed monthly, nd a few months later was replaced by tungsten electrode (*6*, *7*).

The platinum-tungsten setup is now in se in practically all of the company labo- atories and an electrometric apparatus in ll. Figures 1 and 2 show the photograph nd the wiring diagram of the preferred imetallic electrode apparatus.

The cabinet is of oak with a black Formica ase, and is closed at the back with double ooden doors. The lines for ferrous sulfate olution, distilled water, and motor are car- ied through the back of the cabinet. All xposed metal clips and parts are chromium lated. The motor and the ring supporting he flask are carried on a rod in the interior f the cabinet. At the upper left (Figure 2) is he Weston galvanometer, model 699, sensi- ivity 2 microamperes per scale division. Be- ow the galvanometer is the adjusting knob f the potentiometer, Yaxley Manufacturing ompany, 1000 ohms. The knob below he potentiometer controls a three-armed istilled water spray for washing the elec- rodes and stirrer. The support for the flask s movable, so that the flask may be raised r lowered from position. In some installa- ions the support is attached to the water alves, so that the spray operates when the ing is pushed to the left. The toggle witches are shown at the lower left: a single- ole single-throw at the left for the motor, nd a double-pole single-throw for the gal- anometer circuit. The funnel, stainless teel or Monel, is connected to the drain. The electrodes are 20-gage platinum or ungsten wire sealed into glass tubing. The xposed electrode wires are approximately mm. The tubing of the electrode is mercury-filled. The stirrer s made of a glass rod and fastened in a chuck on the motor haft. The motor is model 3 (Eastern Engineering Corporation) vith rheostat for regulating the speed.

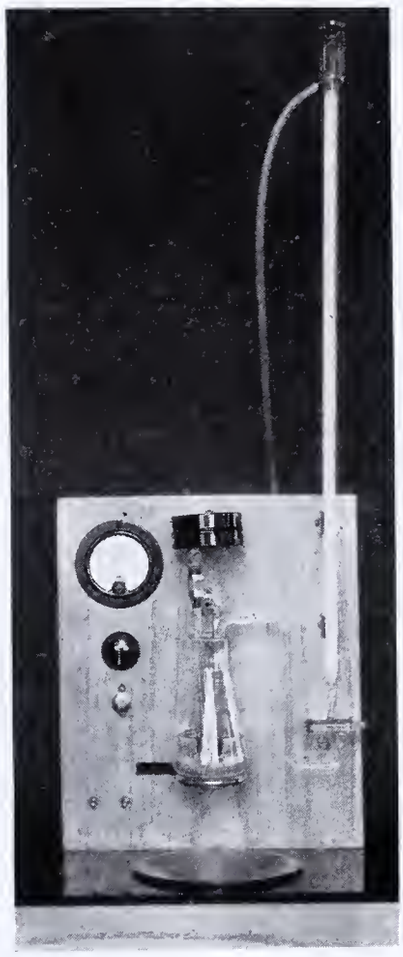

FIGURE 2. PHOTOGRAPH OF APPARATUS

Procedure

While the general procedure of the dichromate oxidation of glycerol is well known, an outline of the preparation of the olutions and details of oxidation and titration may be de- irable.

STANDARD DICHROMATE SOLUTION. The dichromate solution s pipetted into the oxidation flasks with a 25-ml. Lowy auto- natic pipet (or for special samples a 10-ml. Lowy automatic ipet holding exactly two-fifths as much as the 25-ml. pipet). The strength of the dichromate solution is made so that the 25-ml. ipet will deliver 1.864 (*4*) grams of $K_2Cr_2O_7$, which is equivalent o 0.25 gram of glycerol. The weight of potassium dichromate n grams required for 1 liter at 25° C. is determined by multiply- ng 74.56 by the ratio of 25 to the volume delivered by the pipet t 25° C. The dichromate is dissolved in distilled water, 150 ml. f concentrated sulfuric acid are added, and the solution is made o 1 liter at 25° C. The strength of the solution is checked against tandard dry powdered dichromate by weighing 1.864 grams of the atter, and dissolving in 75 ml. of distilled water and 15 ml. of oncentrated sulfuric acid. The ferrous sulfate titrations of a ipetful of the dichromate solution and of the standard dichro- nate must check within 0.05 ml. of ferrous sulfate solution or the dichromate solution must be adjusted.

FERROUS SULFATE SOLUTION. Five kilograms of reagent grade ferrous ammonium sulfate are dissolved in about 10 liters of distilled water, 1800 ml. of concentrated sulfuric acid are added, and the volume when cooled to room temperature is made up to 16 to 17 liters.

Details of Analysis of a Sample

The details described in the following paragraphs apply to a sample of C. P. glycerol requiring no preliminary purification. The procedures of oxidation and titration are identical for other samples.

Make a 2 ± 0.001-gram sample to volume in a 500-ml. flask. Pipet a 50-ml. aliquot into a 250-ml. wide-mouthed Erlenmeyer flask containing a 25-ml. pipetful (at 25° ± 0.5° C.) of the standard dichromate solution. Add 15 ± 1 ml. of concentrated sulfuric acid. Cover the flask at once with a watch glass.

The samples are usually handled in batches. With each batch prepare at least two blanks by using the same amounts of dichromate solution, sulfuric acid, and water as for the samples. Titrate one blank before and the second after the samples. Use the average of the blank titrations in calculating the glycerol content. Immerse the flasks containing the samples and blanks in a steam bath and hold them at a temperature of 90° to 100° C. for 2 hours. At the end of 2 hours cool the flasks and contents by immersion in cold water until a temperature of 25° to 40° C. is reached.

Remove the watch glass from a flask and place the flask in position on the apparatus with both electrodes and stirrer in the solution and the tip of the buret extending well into the neck of the flask. Close the circuits and bring the galvanometer reading to zero by adjustment of the rheostat. Begin titration slowly with ferrous sulfate solution and observe the galvanometer needle closely. When within 1 to 2 ml. of the end point the needle is deflected sharply to one side, but immediately returns to the zero position. Add the ferrous solution more slowly. When almost at the end point, a short time should be allowed after each addition to allow the needle to move back. At the end point the needle swings over to the side of the scale and remains there. Open the circuits, read the buret, and remove the flask for the next titration. Press the button and flush the electrodes and stirrer as the flask is being removed. After the final titration wash off the electrodes and stirrer and allow the electrodes to stand in distilled water. The glycerol content of the sample is calculated from the difference between blank and sample titrations.

The tungsten electrode should be cleaned about every 6 weeks by dipping for a few seconds into fused sodium nitrite held just slightly above its fusion temperature.

Care must be taken to use sufficient sulfuric acid to give an equivalent of, at least, 1.230 specific gravity (*3*). The excess of dichromate after heating must be such that a back-titration of at least 9 ml. of ferrous sulfate solution is obtained. For some samples of low glycerol content of 100-ml. aliquot, 30 ml. of sulfuric acid and 10 ml. of dichromate are used.

Summary

The method is very rapid and accurate with a sharp, positive end point, and can readily be operated under varying conditions of lighting by any analyst who can read a buret—even by one who is color-blind.

Literature Cited

(1) Atanasiu, I. A., and Velculescu, A. I., *Bul. Chim. Soc. Romane Chim.*, **35**, 85–90 (1934).
(2) Kelley, G. L., Adams, J. R., and Wiley, J. A., J. IND. ENG. CHEM., **9**, 780–2 (1917).
(3) Kellner, J., *Z. deut. Ol u. Fett-Ind.*, **41**, 751–2 (1921).
(4) Langmuir, A. C., J. IND. ENG. CHEM., **3**, 679–86 (1911).
(5) Randa, E., *Oil & Soap*, **14**, 7–10 (1937).
(6) Shenk, W. E., and Fenwick, F., IND. ENG. CHEM., Anal. Ed., **7**, 194–7 (1935).
(7) Willard, H. H., and Fenwick, F., *J. Am. Chem. Soc.*, **44**, 2504–16, (1922).

RECEIVED August 16, 1937

Extraction of Gossypol with Different Ethers

Causes of Varying Results

J. O. HALVERSON AND F. H. SMITH, Agricultural Experiment Station, Raleigh, N. C.

VARIOUS lots of ethyl ether (U. S. P. grade, not for anesthesia) differ in their ability to extract gossypol from cottonseed meal (*2*). The influence of factors affecting results in the method of estimation has been studied (*2*), but the cause of the varying results obtained with the extraction with different lots of ether has heretofore remained obscure. It was essential that consistent results be obtained in the study of the nature of the bond between gossypol and the processed meal in "bound" gossypol which is not readily extracted (unpublished work) but is slowly broken down in the presence of water (*3*).

Ethers from two sources were used, designated as *B* and *G*. The results reported are in most instances the average of triplicate or quadruplicate determinations obtained by a modified method (in press). Various lots of ether were used at different times; some of these contained peroxide which oxidizes gossypol solutions, especially if alkaline (*1*).

Table I presents the results of the extraction of gossypol from three samples of cottonseed meal with U. S. P. ethers from two sources, both with and without peroxides. The ether containing peroxides extracted appreciably less gossypol, in one instance as low as 0.006 per cent, while the same ether with the peroxides removed extracted 0.102 per cent, almost equal to the 0.112 per cent extracted by the *G* ether which did not contain peroxides.

TABLE I. GOSSYPOL EXTRACTED WITH U. S. P. ETHERS

Cottonseed Meal	Date	Source of Ether[a]	Gossypol, %
2117	12/17	*B* 1 year old	0.081
	1/2	*B* (with peroxides)	0.063
2118	12/17	*B* 1 year old	0.051
		B 2 years old	0.056
	1/2	*B* 2 years old	0.052
		B (with peroxides)	0.037
1578	5/16	*B* (with peroxides)	0.006
		B (peroxides removed)	0.102
		G (no peroxides)	0.112

[a] *B*, from J. T. Baker Chemical Co., ordered in 50-pound steel drums; *G*, from General Chemical Company, ordered in 30-pound steel drums.

TABLE II. RECOVERY OF GOSSYPOL (50 MG.) REFLUXED WITH ETHER WITH OR WITHOUT PEROXIDES

Date	Treatment of Ether	Gossypol, Mg.	Recovered, %
3/28	Reagent ether	48.0	96.0
	B, purified	46.7	93.6
	G (drum), no peroxides	46.6	93.3
	B, with marked peroxides	34.8	69.6
	Control (not refluxed)	46.9	93.8
4/8	*B*, purified	46.0	92.0
	B, with peroxides	39.7	79.4
	Control (not refluxed)	48.2	96.4
	B, purified plus acetaldehyde	45.7	91.4

Since the presence of peroxides in the ether appeared to give low results, 50 mg. of purified gossypol were refluxed with a highly purified ether (reagent), a purified *B* ether, a peroxide-free *G* ether, and two *B* ethers containing peroxides (Table II). In every instance where peroxides were absent 91.4 per cent or more of gossypol was recovered; where they were present, materially less gossypol (69.3 and 79.4 per cent) was obtained. It is evident that the presence of peroxides and not aldehyde in the ether caused the destruction of gossypol.

Table III indicates that a purified ether free from peroxides extracted less gossypol (0.085 per cent) from meal 1578, than the *G* ether (0.108 per cent) from the drum which was peroxide-free. When 10 ml. of alcohol per determination were added to the purified *B* ether (Table III), almost the same amount of gossypol, 0.106 per cent, was extracted as with the *G* ether. A similar difference is shown with meal 1578 (Table I). Likewise, a purified ether with 10 ml. of alcohol added extracted more gossypol from meal 2217 (Table III) than the *B* ether with 1 per cent of alcohol added (Table IV). The addition of 10 ml. of alcohol to the purified ether extracted 0.092 and 0.101 per cent of gossypol from meals 2216 and 2217, respectively. This was later confirmed by repeating the extractions, giving 0.096 and 0.098 per cent.

TABLE III. RESULTS WITH PURIFIED OR PEROXIDE-FREE ETHERS

Cottonseed Meal	Date	Ether	Gossypol %
1578	6/20	*G* (drum), peroxide-free	0.108
		B, purified	0.085
		B, purified plus 10 ml. of alcohol	0.106
	7/1	*B*, purified	0.103
		G (drum), peroxide-free	0.123
2216	2/4	Purified ether plus 10 ml. of alcohol	0.092
	2/10	Purified ether plus 10 ml. of alcohol	0.096
2217	2/7	Purified ether plus 10 ml. of alcohol	0.101
	2/10	Purified ether plus 10 ml. of alcohol	0.098

The peroxide-free *G* ether from the drum extracted more gossypol than the purified ether. The addition to the purified ether of 10 ml. of alcohol per determination increased the yield. The high results from the extractions on meal 1578 made on July 1 with *B* purified ether and with peroxide-free *G* ether are exceptional. This set of extractions was made during an extremely hot spell; the unusually high room temperature probably facilitated the rate of extraction so that it proceeded more rapidly than usual. Therefore, all extractions thereafter were made at 45° C., the receiving flasks being kept in a thermoregulated water bath, with the Soxhlet extractors containing the charge surrounded on all sides and top with a detachable box of pressboard fitted closely on the top of the water bath. This expedited the rate of extraction, making it more uniform for all determinations, and also yielded more uniform results.

Since purified ether extracted more gossypol when alcohol was added (Table III) and since ethyl ether (U. S. P. grade, not for anesthesia) may contain as much as 4 per cent of alcohol and water, sufficient alcohol was added to the peroxide-free *B* ether from the drum to modify the *B* ethers to contain, respectively, 1, 2, 2.5, 3, and 3.5 per cent of alcohol, including that already present (Table IV). The *B* ether without the addition of alcohol had previously extracted less gossypol. The results show that 1 per cent of alcohol was not effective but that 2 to 3.5 per cent aided the extraction of gossypol in yielding higher results.

The peroxide-free ethers from the drums (Table V) vary in their ability to extract gossypol, the *G* ether being superior. The *G* and *B* ethers differ in their density, being 0.724 and 0.722, respectively. An analysis of these ethers showed the water and alcohol content to be appreciably higher in the *G* ether which extracted the greater percentage of gossypol. The percentage of alcohol, ether, and water was readily determined by means of a buret, thermometer, and pycnometer, using the method of Marqueyrol and Goutal (*4*) as modified by Smisniewicz and Zielinski (*5*).

TABLE IV. GOSSYPOL EXTRACTED WITH ETHER CONTAINING VARIOUS AMOUNTS OF ALCOHOL

(ottonseed meal, 2217; *B* ether, drum, peroxide-free, composition modified)

cohol, %	1	2	...	2.5	3	...	3.5
ossypol, %	0.085	0.094	0.098	0.101	0.092	0.096	0.100

ABLE V. EFFECT OF COMPOSITION OF ETHER ON AMOUNTS OF GOSSYPOL EXTRACTED

(Cottonseed meal 2217)

ate	Source of Ether	Density	Composition Alcohol %	Composition Water %	Composition Ether %	Gossypol Extracted %
17	*B* (drum), peroxide-free	0.722	0.3	0.70	99.0	0.089
	G (drum), peroxide-free	0.724	2.4	1.02	96.55	0.108
3	*B* (drum)	...	...	...	...	0.077
	B, modified to *G*	0.726	2.3	1.2	96.5	0.099
	G (drum)	...	...	...	...	0 090
7	*B* (drum)	...	...	...	...	0 094
	B modified to *G*	0.726	2.3	1.2	96.5	0.107
	G (drum)	...	...	...	...	0.107
18	*B*	...	...	...	...	0.083
	B modified to *G*	0.726	2.5	1.05	96.45	0.096
	G	...	...	...	...	0.096

The extraction of gossypol from meal 2217 was made with ıe *G* and *B* ethers and later with this *B* ether modified to ıe same composition as that of the *G* ether with a density of .724, by the addition of the proper amount of alcohol (95 er cent alcohol by volume, the composition of which was ırefully determined) and by water. The modified *B* ether xtracted somewhat more gossypol (0.099 per cent) than ıe *G* ether (0.090 per cent) but not quite as much as the .108 per cent which the *G* ether extracted on February 17. 'he *B* ether was again modified on March 7 and March 18) the same composition as the *G* ether. In both instances ıe modified ether extracted as much gossypol as the *G* ther, all having the same composition. The modified perxide-free ether which extracted the optimum amount of ossypol at a constant temperature of 45° C. contained 2.3 to 2.5 per cent alcohol (by weight) and 1 to 1.2 per cent of water, having a density of 0.724 to 0.726 at 15.6° C.

Summary

In the estimation of gossypol from cottonseed meal it is necessary to use ethyl ether free from peroxides, the presence of which causes low results.

Ether which was purified to remove peroxides did not extract as much gossypol as the peroxide-free *G* ether taken from the drum. This was due to the presence of the relatively larger quantities of alcohol and water in the ether from the drum, since the greater part of these constituents were removed during purification. When the composition of the purified ether was modified to that of the *G* ether, both extracted the same quantity of gossypol from cottonseed meal.

Conclusion

It is concluded that a peroxide-free ether containing 2.3 to 2.5 per cent of alcohol (by weight) and 1 to 1.2 per cent of water, having a density of 0.724 to 0.726 at 15.6° C., is necessary for the optimum extraction at 45° C. of gossypol from cottonseed meal containing approximately 22 per cent of moisture and with 5 ml. of water added to the ether in the receiving flask.

Literature Cited

(1) Carruth, F. E., *J. Am. Chem. Soc.*, **40**, 661 (1918).
(2) Halverson, J. O., and Smith, F. H., IND. ENG. CHEM., Anal. Ed., **5**, 29, 320 (1933).
(3) *Ibid.*, **6**, 356 (1934).
(4) Marqueyrol, M., and Goutal, E., *Mém. poudres salpetres*, **19**, 368–80 (1917).
(5) Smisniewicz, T., and Zielinski, R., *Przemysl Chem.*, **16**, 35 (1932).

RECEIVED September 14, 1937. Presented before the Division of Biological Chemistry at the 93rd Meeting of the American Chemical Society, Chapel Hill, N. C., April 12 to 15, 1937. Published with the approval of the Director of the North Carolina Experiment Station as Paper 99 of the Journal Series.

Revised Method for the Estimation of Gossypol in Cottonseed Meal

F. H. SMITH, Agricultural Experiment Station, Raleigh, N. C.

THE published method (*2*) for the estimation of ether-soluble gossypol has been considerably modified. Because f the difficulties encountered in working with gossypol, the evised method is described here in detail.

Moisten a charge (120 grams) of cottonseed meal ground to pass hrough a 40-mesh sieve with 27.5 ml. of water in a large mortar. Remove the pasty meal which adheres to the mortar and pestle and ıcorporate it with that part which is not sufficiently wet to form paste. Pass the moist meal through a 20-mesh sieve and return he wet lumps to the mortar for further grinding. Mix a portion f the meal which most readily passed through the sieve with the et meal resulting from the crushed lumps and sieve as before. Repeat this process until the whole charge has passed through the ieve, then return it to the mortar and mix thoroughly.

Take a 2-gram charge of the mixed moistened sample for the letermination of moisture, which should be about 22 per cent. Divide the remaining portion into equal parts by weight by counerbalancing and immediately transfer to the thimbles (43 by 23 mm.) of two Soxhlet extractors. Extract 72 hours with perxide-free ether containing 2.3 to 2.5 per cent of alcohol and 1 to 1.2 er cent of water by weight (yielding an ether of 0.724 to 0.726 lensity at 15.6° C., *3*, *4*), also adding 5 ml. of distilled water to he ether in each receiving flask.

NOTE. To prepare peroxide-free ether shake 3.5 liters of ether nd 0.25 liter of distilled water with portions of a saturated solution of sodium bisulfite until Jorissen's vanadic acid color test (*1*) shows that all peroxides are reduced. Then wash the ether three times with 0.35 liter of distilled water, draining off each time. Finally wash with 0.35 liter of a solution of 5 per cent sodium hydroxide to neutralize any residual bisulfite and free sulfur dioxide. Drain off the alkali solution, dehydrate with calcium chloride, and distill the ether in the presence of a stick of sodium hydroxide. Determine the composition (*3*, *4*) and modify by adding the proper amounts of alcohol and water. Ether of this composition may also be prepared by adding alcohol and water, by weight, directly to peroxide-free reagent ether.

The joints of the Soxhlet extractor should be tight to prevent loss of ether. The depth of ether in the receiving flask during the process of extraction should not decrease to less than 3.5 cm. (1.5 inches). The extraction is conducted at a constant temperature of about 45° C. in a water bath regulated by a thermostat. The extractors are enclosed on the top and sides above the water bath with pressboard, holes being cut in the top for passing the condensers through to the extractors.

When the process of extraction is completed, remove the thimbles, and collect the ether in the extractors until 25 to 30 ml. of the extract remain in each receiving flask. Remove the receiv-

ing flasks and filter the extracts through crucibles in which a layer of Hy-Flo-Supercel (from the Johns-Manville Co.) is placed over a layer of ignited asbestos. The filtrates are received in 200-ml. Erlenmeyer flasks placed under bell jars; in a hole in the top of each jar a cork stopper is inserted for the stem of the Gooch holder and a glass tube to which suction is applied. Wash the flasks and Gooch crucibles with ether, combining the washings with the filtrates.

Remove the ether in each Erlenmeyer flask rather completely under reduced pressure by inserting in the flask a one-hole rubber stopper and applying suction. Hasten the removal of the ether by rotating the flask in a pan of hot water not exceeding 50° C. Discontinue when the "rapid boiling" stops. Add 75 ml. of petroleum ether (Skelly solve F) and 5 ml. of ethylene glycol to each flask. Mix by rotating the flask and let stand overnight. Filter through a Gooch crucible (prepared as above) in order to remove the material precipitated by the petroleum ether. Wash the precipitate with a small amount of petroleum ether, receiving the washings in the filtrate. In order to prevent further precipitation of the insoluble material by the decrease in temperature and the addition of the washings during the process of filtration, place the flasks containing the filtrates in a pan of water at about 35° C.

In order to precipitate the gossypol as a dianiline compound, add 2 ml. of aniline and shake thoroughly. Digest 1 to 1.25 hours by placing the flasks in pans of hot water (50° to 55° C.) not over 2 cm. (0.75 inch) deep, exercising care not to exceed 60° C. When the digestion is completed, add sufficient petroleum ether, if necessary, to make a total volume of 50 to 60 ml. If the volume should fall to approximately 25 ml. before the digestion is completed, add an equal volume of petroleum ether (Skelly solve B or F). Lightly stopper the flask and let stand overnight. When the precipitate is small (10 to 15 mg.), let stand 36 hours or longer.

Filter through a tared Gooch crucible and wash the precipitate of dianiline gossypol with petroleum ether (Skelly solve B or F). Follow with four washings of water, then with 5 ml. of 95 per cent alcohol, and finally with a few milliliters of petroleum ether. Dry the precipitate to constant weight at 100° C. Multiply the weight of dianiline gossypol by 0.775 to obtain the equivalent weight of gossypol.

Literature Cited

(1) Baskerville and Hamor, J. Ind. Eng. Chem., 3, 387 (1911).
(2) Halverson, J. O., and Smith, F. H., *Ibid.*, Anal. Ed., 5, 29 (1933).
(3) Marqueyrol, M., and Goutal, E., *Mém. poudres salpetres*, 19, 368–80 (1917).
(4) Smisniewicz, T., and Zielinski, R., *Przemysl Chem.*, 16, 3 (1932).

Received September 14, 1937. Published with the approval of the Director of the North Carolina Agricultural Experiment Station as Paper 100 of the Journal Series.

Determination of Chromium in Chromite

A New Procedure Employing a Mixture of Phosphoric, Sulfuric, and Perchloric Acids

G. FREDERICK SMITH AND C. A. GETZ, University of Illinois, Urbana, Ill.

THE determination of chromium in chromite has until now been made following solution of the sample after a sodium peroxide fusion (*1*). The highly refractory nature of chromite ores eliminates the possibility of solution following acid treatment with 72 per cent perchloric acid, 95 per cent sulfuric acid, or mixtures of both. The nearest approach to a suitable single acid is concentrated perchloric acid, but it would be desirable to be able to increase the temperature at which it could be used and simultaneously to increase the solubility of chromic acid, which forms an insoluble protective coating on the surface of the undissolved ore. Using a mixture of phosphoric and sulfuric acids, solution of all available types of chromite ores is rapid. The conditions for the subsequent oxidation of chromium in this mixed acid solution of the sample are described here. The resulting complete method is very rapid, accurate, and economical.

The complete analysis of chrome ores has been described by Cunningham and McNeill (*1*). The determination of chromium follows solution after fusion with sodium peroxide. The determination of iron and aluminum can be made after solution in a mixture of sulfuric and perchloric acids, or for samples not soluble by such treatment, after fusion in a mixture of sodium carbonate and borax. Willard and Thompson (*5*) recommend sirupy phosphoric acid as a solvent for refractory materials such as iron ore and bauxite, but this procedure was found to be unsuited to the solution of chromite. Smith and Getz (*2*) have used phosphoric acid as a solvent for ferrochrome, followed by the addition of perchloric and sulfuric acid for the oxidation of chromium. A somewhat similar process has been described by Smith and Smith (*4*) for the determination of chromium in stainless steel after solution in a mixture of sulfuric and perchloric acids.

Table I. Analysis of Bureau of Standards Chrome Refractory 103

Sample	0.05019 *N* $FeSO_4$ Required	Cr_2O_3 Found	Error Cr_2O_3
Gram	*Ml.*	%	%
0.1132	32.99	37.07	+0.10
0.1526	44.30	36.91	−0.06
0.1843	53.47	36.88	−0.09
0.1285	37.36	36.96	−0.01
0.1568	45.60	36.97	0.0
0.1576	45.70	36.88	−0.09
0.1936	55.94	36.73[a]	−0.24[a]
0.1441	41.95	37.02	+0.05
		Av. 36.96	0.05

[a] Excluded from the averages.

Materials Used

The chromite solvent consists of a mixture of 8 parts of 95 per cent sulfuric acid and three parts of 85 per cent phosphoric acid. The oxidizing solution is made up with 2 parts of 72 per cent perchloric acid and one part of distilled water. A standard 0.05 *N* solution of ferrous sulfate and a standard 0.05 *N* solution of ceric sulfate are prepared and standardized by procedures often previously described. Ferroin (*o*-phenanthroline ferrous ion), a 0.025 *M* solution, is used as the indicator. Finely ground crystals of potassium permanganate, dilute (1 to 3) hydrochloric acid, and dilute (1 to 1) sulfuric acid are also required.

Special Laboratory Apparatus

The technic employed in the solution of samples, oxidation of chromium, and subsequent preparation for titration is greatly simplified by use of a few special items of laboratory equipment which have been described in a previous paper (*2*). While the determinations can be carried out successfully without the modified Rodgers ring burner and digestion flask

l head therein described, the work is much simplified by ir use.

nalyzed Samples for Evaluation of Procedure

The Bureau of Standards chrome refractory No. 103 was most valuable analyzed sample available. A sample chromite ore having a complete, accurate analysis was plied through the courtesy of H. H. Willard. A series of omite ores was furnished by E. J. Lavino and Co., Norris-vn, Pa., with the works analysis for Cr_2O_3 given through the dness of G. E. Seil. Other samples were supplied by the romium Mining and Smelting Corporation, Sault Ste. rie, Ontario. The samples were from such varied sources at the new procedure is probably applicable to any chromite e that may be encountered. The samples had a range of 26 37 per cent of chromic oxide, 8 to 22 per cent of silica, and to 22 per cent of magnesium oxide. The beneficiated mple supplied by the Canadian firm was low in Cr_2O_3 and gh in calcium oxide.

Table II. Determination of Cr_2O_3 in Commercial Samples of Chromite

Source	Sample No.	No. of Duplicate Analyses Averaged	Cr_2O_3 Found %	Average Deviation from Average	Cr_2O_3 Present %	Difference Cr_2O_3 %
E. J. Lavino	1	3	32.56	0.01	...	..
	2	4	31.86	0.06	...	..
	3	4	33.35	0.02	33.39	−0.04
	4	4	30.96	0.04	30.86	−0.10
	5	4	30.90	0.02	30.88	−0.02
	6	3	31.79	0.02	...	..
	7	2	31.44	0.02	...	..
	8	3	31.64	0.03	...	..
	9	3	31.92	0.05	...	..
University of Michigan	10	3	26.63	0.06	26.58	+0.05
Canadian	11	3	27.12	0.04	...	..
Canadian (beneficiated)	12	5	25.72	0.10	...	..

Detailed Procedure

Grind samples to pass a 100-mesh sieve and dry 2 hours at 5° to 110° C. Transfer weighed 100- to 150-mg. samples from weighing bottle to a clean, dry 500-ml. Erlenmeyer flask. ld 10-ml. of chromite solvent and swirl flask vigorously at ce to get the sample in suspension and prevent a strong tendency form a cake and stick to the bottom of the flask. Adjust e refluxing still head in the neck of the flask and heat to gentle iling temperature, continuing the swirling motion for 5 to 15 inutes or until the sample is seen to be entirely dissolved. low to remain on the burner without swirling 5 minutes longer. mples which are not all dissolved in the time given should be ound finer. The solution at this point is grayish green in lor and only a very small amount of insoluble silica is found spended in the solution. In swirling the hot flask, a laboratory etal clamp is conveniently employed.

Allow the contents of the flask to cool for a minute and add rough the still head 12 ml. of the oxidizing solution. Place a nall Anschütz thermometer, suspended from a small platinum ire, within the solution in the flask, retaining the refluxing still ead in position. Heat to 215° C. during a 5-minute interval. he droplets of condensed acid on the flask walls should all be ndergoing rapid reflux down the flask walls at the end of this eriod. Remove the flask and contents from the source of heat nd add 60 to 70 mg. of powdered potassium permanganate, ter partially removing the still head and allowing the flask ntents to cool to 210° C. Readjust the still head and swirl e flask contents to disperse the permanganate. With con-nued swirling of the flask contents, dip the flask into cold ater. After 8 to 10 seconds add 125 ml., cautiously at first, of stilled water, pouring it through the refluxing still head. Re-ove and rinse the still head and thermometer. Rinse the flask alls and add 25 ml. of dilute (1 to 3) hydrochloric acid and a ilter-Cel boiling chip.

Heat to a gentle boil and continue to boil 5 minutes after dis-ppearance of potassium permanganate and manganese dioxide remove the chlorine. Cool to ordinary temperature, and add ml. of dilute (1 to 1) sulfuric acid. Titrate, using a standard olution of approximately 0.05 N ferrous sulfate, until the greater part of the hexavalent chromium is reduced. Add 3 drops of ferroin indicator and titrate to complete reduction of chromium, as indicated by the appearance of a definite pink coloration. About 0.05 ml. of the ferrous sulfate is required after the first appearance of an orange color in the blue-green reduced solution. From the measured volume of standard ferrous sulfate required, the per cent of chromic oxide present may be calculated. The potassium permanganate is used in this procedure to eliminate the effect of hydrogen peroxide, known to result (*3*) during oxidations using perchloric acid at or near 200° C.

Analyses

For the following analyses the ceric sulfate was found as the mean of 9 consecutive comparisons with Bureau of Standards $Na_2C_2O_4$ to be 0.03541(1) N with an average deviation from the mean of one part in a thousand. The ratio of ceric sulfate to ferrous sulfate was 50/35.28, giving a ferrous sulfate normality of 0.05018(6) N.

Bureau of Standards Chrome Refractory 103. Eight consecutive analyses of chrome refractory 103 (corrected for its content of 0.08 per cent of vanadium) were carried out and the results are given in Table I. The certificate value for this sample is 36.97 per cent Cr_2O_3. The average of the absolute errors shows that the determinations agreed with the certificate value to within less than 2 parts per thousand.

To check the extent to which the finely ground samples of chromite ore adsorb moisture upon standing, three analyses of undried sample 103 were made and 36.75, 36.78, and 36.79 per cent of chromic oxide were found. This indicates the importance of drying before sampling.

Chromite from Commercial Sources. To test further the general applicability of the new process to samples of chromite from a wide variety of sources, 12 additional samples were analyzed and the results are given in Table II. The values shown are the average of 3 to 4 individual determinations of each ore.

The complete analysis of sample 10 was: Cr_2O_3, 26.58; SiO_2, 22.04; FeO, 14.93; Al_2O_3, 9.01; MgO, 21.38; SO_3, 0.38; P, 0.39; loss on ignition, 4.77 per cent. The beneficiated sample, No. 12, was found to be the most resistant of all to the solvent action of mixed phosphoric and sulfuric acids.

Summary

A new and rapid method for the solution of all types of chromite ore, using a mixture of phosphoric and sulfuric acids, is described. The chromium, after solution in mixed phosphoric and sulfuric acids, is oxidized, using concentrated perchloric acid at 215° C., followed by treatment for a brief time with potassium permanganate.

In the determination of hexavalent chromium, standard ferrous sulfate is used with ferroin as indicator.

The new process was used for the analysis of 13 samples of chromite and chrome refractories from a wide variety of sources and no exceptions to its applicability were found. The method is rapid, accurate to within less than 2 parts per thousand, and not costly.

Literature Cited

(1) Cunningham and McNeill, Ind. Eng. Chem., Anal. Ed., **1**, 70 (1929).
(2) Smith and Getz, *Ibid.*, **9**, 378 (1937).
(3) Smith, McVickers, and Sullivan, *J. Soc. Chem. Ind.*, **54**, 369T (1935).
(4) Smith and Smith, *Ibid.*, **54**, 185T (1935).
(5) Willard and Thompson, Ind. Eng. Chem., Anal. Ed., **3**, 399 (1931).

Received July 22, 1937.

Modified Distillation Method for Moisture

H. N. CALDERWOOD[1] AND R. J. PIECHOWSKI
University of Wisconsin, Madison, Wis.

A SERIOUS defect of the distillation method for the determination of moisture is the difficulty in removing all the condensed water adhering to the inner wall of the condenser tube (*3*, *4*). This defect may be corrected by introducing into the condenser a very small amount of some volatile substance which will dissolve both the water and the immiscible liquid adhering to the inner wall of the condenser tube, but will allow them to separate again in the receiver tube.

TABLE I. USE OF ETHANOL IN THE DISTILLATION METHOD FOR THE DETERMINATION OF MOISTURE

Sample	Amount of Sample Trial 1	Amount of Sample Trial 2	Water Collected Trial 1	Water Collected Trial 2	Drops of Alcohol Trial 1	Drops of Alcohol Trial 2
	Ml.	*Ml.*	*Ml.*	*Ml.*		
Water	1	1	1.0	1.0	2	2
	2	2	2.0 −	2.0	2	2
	4	4	4.0 −	4.0	5	2
	6	6	6.0	6.0	2	2
	8	8	8.0	8.0	2	5
	10	10	10.0	9.97	2	5
	Grams	*Grams*				
Soap powder (official method)	20.0	20.0	2.14	2.16	2	2
Soap powder (modified method)	20.0	20.0	2.20	2.20	2	2

Experimental

The volatile substance used was 95 per cent ethanol and the immiscible liquid, xylene. Since the solubility data in the literature (*2*, *6*) on the system ethanol-xylene-water are not accurate enough for the very small concentrations of ethanol used in this work, determinations were made to test the accuracy of the modified method.

The Dean-Stark distilling tube receiver (*5*) was calibrated against the pipet used for measuring the water into the boiling flask. A known volume of water was added to a definite quantity of xylene in a 500-ml. boiling flask. The flask was attached to the distilling tube receiver and heated for 1 hour at a rate giving approximately 5 ml. of reflux per minute and then for 3 hours at double that rate. Two drops of ethanol were then added through the top of the condenser, causing violent ebullition and refluxing. When these had ceased, boiling was continued for 5 minutes. If drops of water still remained in the condenser tube the ethanol treatment was repeated, using 3 drops. The source of heat was then removed, the apparatus allowed to cool, and the volume of the aqueous distillate read.

The use of 5 drops of ethanol produced no readable increase even when the water volume was only 1 ml. Determinations made with the addition of larger quantities of ethanol, never exceeding more than 3 drops at a time, showed that a total of 30 drops caused no readable increase in the volume for 10 ml. of aqueous distillate, but did cause an increase for volumes of 4 ml. or less.

Both 100- and 50-ml. quantities of commercial xylene were used, but since there was no difference in the results obtained, only the values for the 50-ml. quantities are reported in Table I. The table also reports results obtained in the analysis of a sample of soap powder by both the official method (*1*) and the modified method described below.

Discussion

The slow rate of boiling for the first hour prevents the aqueous condensate from being carried back to the boiling flask through mechanical action of the returning xyle For samples yielding less than 4 ml. of water, the total boili time is usually about 2.5 hours, but for those yielding 6 10 ml. of water, about 3.5 hours is the shortest possible ti for complete dehydration. Under ordinary laborat conditions distillations performed without interruption the boiling rates and for the periods specified in the modifi method will give complete dehydration in 4 hours, even wh the aqueous condensate amounts to 10 ml. A longer ti is required if the distillation is interrupted before co pletion.

The use of ethanol as an indicator to show when dehydr tion of the sample is complete should not be attempted, account of the danger of using too much and causing a serio error in the reading as a result of the solvent action of ethan on xylene and water. The ethanol should not be added un dehydration of the sample is complete.

The xylene after serving for two determinations shou be freed from ethanol by washing three times with one-ten its volume of water, and dried before further use.

When the condenser has been cooled properly during t distillation, one addition of ethanol, 2 drops, is sufficien If on account of insufficient cooling a large section of t condenser tube shows drops of water, the second portion, drops, must be used also. The ethanol must not be add in a single 5-drop portion, since the violent boiling th results is likely to eject condensate from the top of the co denser.

If after the first portion of ethanol is introduced addition water is deposited on the condenser tube, the dehydratio of the sample has not been complete. Careful observance the rates and periods of boiling specified will give complet dehydration.

Modified Method

Prepare and weigh the sample for distillation in the usu manner. Boil continuously for 1 hour at a rate of approximatel 5 ml. of reflux per minute and for 3 hours at double that rat Without interrupting the boiling, now add through the top the condenser 2 drops of 95 per cent ethanol. After the violen ebullition and refluxing have ceased, continue boiling for minutes. Should drops of water still remain on the inner wa of the condenser tube, prolong the boiling and give a secon treatment with ethanol, using 3 drops. After the violent actio has stopped, maintain the boiling for 5 minutes, then remov the source of heat, allow the apparatus to cool, and read th volume of aqueous distillate.

Summary

In the distillation method for determining moisture, th introduction of a very small quantity of ethanol remove water adhering to the inner wall of the condenser tube, thu increasing the accuracy of the method.

The ethanol should be added only after dehydration of the sample is complete.

Ethanol should not be used as an indicator to show when dehydration of the sample is complete.

Rates and periods of boiling are specified which will give complete dehydration of the sample.

Boiling must be uninterrupted throughout the analysis.

The experimental work in this paper is restricted to the Dean-Stark method, with xylene as the immiscible liquid.

[1] Present address, 3105 Cross St., Madison, Wis.

Literature Cited

1 Assoc. Official Agr. Chem., "Official and Tentative Methods of Analysis," 4th ed., p. 58 (1935).
2 Bonner, W. D., *J. Phys. Chem.*, 14, 738 (1909).
3 Cone, R. M., and Davis, L. H., Ind. Eng. Chem., Anal. Ed., 9, 220 (1937).
(4) Dean, A. L., *U. S. Forest Service Circ.* 108 (1908).
(5) Dean, E. W., and Stark, D. D., J. Ind. Eng. Chem., 12, 486 (1920).
(6) Holt, A., and Bell, N. M., *J. Chem. Soc.*, 105, 633 (1914).

Received October 4, 1937.

Rapid Saponification of Esters by Potassium Hydroxide in Diethylene Glycol

An Aid in Identification and Analysis

C. ERNST REDEMANN AND HOWARD J. LUCAS
Gates and Crellin Laboratories of Chemistry, California Institute of Technology, Pasadena, Calif.

HE saponification of an ester is usually the first step in its identification or analysis. For the purpose of identifica-n, as in quantitative analysis, the reaction preferably is ried out in an aqueous solution of sodium or potassium droxide (*5*); the resulting alcohol and organic acid are n identified through a suitable derivative. For the pur-se of obtaining quantitative data—i. e., determining the onification equivalent—a standard alcoholic solution of lium or potassium hydroxide (or ethoxide) is used. The ction proceeds much more rapidly in alcohol than in water, rtly because both reactants are soluble, and partly because e unknown ester may be transposed to the ethyl ester, as an alcoholic solution of sodium ethoxide (*1*, *6*). In the se of fats, the solvent sometimes employed is glycerol.

BLE I. Saponification Time at Refluxing Temperature

Ester	Time
Benzyl acetate	Very short[a]
Butyl acetate	30 sec.
Butyl oleate	2 min.
Butyl phthalate	2 min.
Butyl propionate	1 min.
Ethyl acetate	Very short[a]
Ethyl acetoacetate	Very short[a]
Ethyl benzoate	1 min.
Ethyl malonate	Very short[a]
Ethyl *m*-nitrobenzoate	1 min.
Ethyl salicylate	Very short[a]
Olive oil	1.5 min.

[a] Completely reacted when refluxing temperature was reached.

There are some undesirable features in the usual procedures ich it is desirable to eliminate. In the qualitative ex-ination of esters, these are: extreme slowness of the re-tion in water solution, especially if the ester is quite insoluble, fficulty in obtaining a derivative of the resulting alcohol, cause of contamination with water; and difficulty in ob-ining a pure derivative of the resulting alcohol when, cause of the insolubility of the ester, the saponification s been done in alcoholic solution. In the quantitative amination of esters, the undesirable features are: slowness the reaction, necessitating long refluxing with possibility loss through volatilization; poor keeping quality of the andard solution, necessitating elaborate precautions against ecomposition, or else frequent preparation; and possible ansposition of the unknown ester to the corresponding ethyl ter, with a possible resultant loss because of increased olatility.

The use of diethylene glycol (β,β'-dihydroxyethyl ether) as e solvent, replacing water, alcohol, and glycerol, is ad-antageous for several reasons: Diethylene glycol readily issolves potassium hydroxide; the solution is stable, and darkens very slowly; diethylene glycol is a better solvent for fats and for many esters than glycerol; it is an industrial chemical and therefore readily obtainable; its boiling point is so high, 244.5° C. (*4*), that a rapid reaction is possible at an elevated temperature; all but high-boiling alcohols can be distilled from the reaction mixture in a fairly pure state; and any intermediate esters formed by transposition (*1*, *6*) are so nonvolatile that loss is unlikely.

Procedure for Qualitative Identification of Esters

In a 10- or 25-ml. distilling flask (preferably the former) are placed 3 ml. of diethylene glycol and 0.5 gram of potassium hydroxide pellets. Following the addition of 10 drops of water, the mixture is heated over a small flame until the potassium hydroxide has dissolved. The mixture is cooled if the ester to be tested is volatile. The ester is added, 1 ml. if a liquid, 1 gram if a solid, or double these amounts if the substance is known to be of high molecular weight. The neck of the flask is now closed with a cork stopper carrying a thermometer of suitable temperature range. The side arm is fitted with a cork stopper of suitable size to connect the flask to a small water-cooled condenser. The flask is heated over a small flame, during which time the contents of the flask are mixed by shaking. When only one liquid phase, or one liquid and one solid phase, remains in the flask, the flask is connected to the condenser and the alcohol is carefully distilled.

When done carefully, this procedure generally yields sufficient alcohol to prepare at least two solid derivatives such as the 3,5-dinitrobenzoate (*3*), the nitrophenyl urethane (*8*), or others.

The residue left in the distilling flask is either a solution or a suspension of the potassium salt of the acid portion of the ester in diethylene glycol. Derivatives of this salt may be prepared as follows:

About 10 ml. of water and 10 ml. of ethyl alcohol are added to the diethylene glycol solution; then a drop of phenolphthalein solution and 6 *N* sulfuric acid, drop by drop, are added until just acid. The resulting solution is set aside for a few minutes to allow as complete precipitation of the potassium sulfate as possible. This precipitate is separated by filtration and the clear filtrate is divided into two equal parts. One portion may be treated with *p*-nitrobenzyl bromide (*7*), and the other with *p*-phenylphenacyl bromide (*2*) or other suitable reagent. This procedure will generally yield two solid derivatives with melting points of use in identifying the acid constituent of the ester.

Discussion of the Qualitative Procedure

The method has been found to be very rapid and entirely satisfactory for a large number of esters. A good separation of the alcohol part of the ester from ethylene glycol is possible,

even when the boiling point of the alcohol is as high as 200° C.—for example, benzyl alcohol. If the ester yields a glycol or a polyhydric alcohol on saponification, the identification of the alcohol part of the ester is not possible, although identification of the acid can still be made. The rapidity with which the saponification takes place is shown in Table I.

Table II. Saponification Data of Esters

Name of Ester	Saponification Equivalent Found No. 1	No. 2	Mean of Nos. 1 and 2	Average Deviation from Mean %	Theoretical Value	Error of Mean %
Isoamyl acetate	135.2	135.9	135.5	0.26	130	+4.4[a]
Isobutyl acetate	116.1	115.7	115.9	0.17	116.1	−0.17
n-Butyl acetate	116.8	116.4	116.6	0.17	116.1	+0.43
Ethyl acetate	88.39	88.63	88.51	0.14	88.06	+0.51
Ethyl benzoate	149.2	148.9	149.1	0.10	150.08	−0.6
Ethyl malonate	79.89	80.21	80.05	0.20	80.04	+0.012
Ethyl *p*-nitrobenzoate	192.1	192.5	192.3	0.10	195.08	−1.3[b]
Ethyl phthalate	111.9	111.8	111.85	0.045	111.06	+0.70
Ethyl salicylate	165.6	166.4	166.0	0.24	166.08	−0.05
Ethyl succinate	86.88	86.48	86.68	0.23	87.05	−0.44
Methyl cinnamate	162.1	161.4	161.8	0.22	162.08	−0.12
Methyl oxalate	59.56	59.23	59.38	0.27	59.02	+0.61

[a] Ester probably contained some isoamyl alcohol.
[b] Ester was shown to contain some free acid.

Saponification Equivalent of Esters

The pieces of equipment necessary are 125-ml. glass-stoppered Pyrex conical flasks, an ordinary 20- or 25-ml. pipet, and a buret. Because diethylene glycol is very viscous, it is desirable to open the tip of the pipet to an inside diameter of 2 to 3 mm., in order to facilitate drainage. The pipet need not be calibrated, since a blank is run on the reagent. It is important that the conditions under which the solution is delivered, especially the temperature and the time of drainage, should be the same for both the analysis and the blank.

The reagents are aqueous 0.5 *N* hydrochloric acid and 1 *N* potassium hydroxide in diethylene glycol. The acid is standardized against aqueous sodium hydroxide, which in turn is standardized against recrystallized potassium acid phthalate using phenolphthalein. The reagent is made by weighing about 60 grams of C. P. potassium hydroxide pellets into a 500-ml. flask, adding 250 ml. of ordinary technical diethylene glycol, and heating to effect solution. A thermometer should be used for stirring and the temperature should be kept below 130° C.; otherwise a dark yellow color, which is troublesome during the titration, develops. As soon as the solid has dissolved, the hot solution is poured into 750 ml. of diethylene glycol in a glass-stoppered reagent bottle. The liquid is thoroughly mixed and allowed to cool. This solution keeps well, but the color deepens slowly. After 5 months the yellow color is sufficient to make the end point difficult to distinguish, but the titer has changed less than 0.1 per cent.

The procedure used in the determination of the saponification equivalent is as follows:

The desired volume (20 to 25 ml.) of the ethylene glycol solution of potassium hydroxide is delivered into a dry 125-ml. glass-stoppered conical flask. The flask is weighed, a suitable quantity (1 to 3 grams) of the ester is added, the stopper is replaced, and the flask is reweighed. The ester is mixed with the solvent by a rotary motion of the flask and contents. While the stopper is firmly held in place, heat is applied slowly and gently by means of a small flame, so that a temperature of 70° to 80° C. is reached within 2 to 3 minutes. The liquid is agitated by a whirling motion during the heating. At this point, the flask is shaken vigorously, the liquid is allowed to drain, and the stopper is carefully loosened to allow air to escape. The stopper is replaced and the temperature is raised to 120° to 130° C. In the case of very high-boiling esters, the stopper is removed and a thermometer inserted.

After 3 minutes at this temperature, such refractory esters as dibutyl phthalate are completely saponified. Lower boiling esters (see below for exception) are entirely reacted at 100° C. The flask and contents are cooled to 80° to 90° C. and the stopper is removed and washed with distilled water. The rinsings are allowed to drain into the flask. The liquid is diluted by the addition of about 30 ml. of distilled water, phenolphthalein added, and titration is made with 0.5 *N* hydrochloric aci A blank is run by pipetting an equal volume of the reagent int second 125-ml. flask, adding about the same amount of wat and titrating with the standard acid, using phenolphthale The saponification equivalent is calculated in the usual way.

Discussion

The principal sources of error are loss by vol tility and incompleteness of reaction. Fort nately, most volatile esters are easily saponifie If the flask is kept firmly stoppered, the sapo fication of volatile esters usually is quantitati by the time the stopper is first removed. Ev at room temperature the reaction may proce fairly rapidly—for example, when two samples ethyl acetate were weighed out and titrate within the 8 to 10 minutes elapsed time the e tent of saponification was 56 and 57 per cent, r spectively. Less volatile esters—for exampl ethyl benzoate—although oftentimes less reactiv give quantitative results, because saponificatic proceeds rapidly at 120° to 130° C. witho material loss of ester, but tertiary butyl aceta saponifies slowly and is rather volatile. By tl standard procedure, this ester is only about 50 per cent h drolyzed, and even when held at 90° to 95° C. for 1 minutes the results are about 8 per cent low.

Table II gives the values obtained for twelve commo esters, which had been highly purified. The average per ce deviation of duplicate determinations from the mean show the good degree of reproducibility offered by this metho The general good agreement of the measured and the retical values for these esters demonstrates the satisfactorine of the method.

A few determinations of saponification numbers were mad on ordinary oils to indicate the applicability of this gener method to the determination of saponification numbers c fats and oils. Although this phase of the work was no extensively investigated, sufficient work was done to show tha saponification numbers within the accepted range wer readily obtained. These results are shown in Table III.

Table III. Saponification Data of Oils

	Saponification Number Found		Accepted Range
Olive oil	197.5	199.3	185–196
Castor oil	180.0	180.4	175–183

Summary

Esters and fats may be saponified rapidly and quantitatively by potassium hydroxide in diethylene glycol. The procedur does not give quantitative results with a volatile inert este such as tertiary butyl acetate. The reaction is of value i qualitative analysis, because in general the alcohol (unles a di- or polyhydric alcohol) can be isolated easily and in reasonably pure state and also because the derivative o the acid can be prepared in the reaction mixture.

Literature Cited

(1) Gibby and Waters, *J. Chem. Soc.*, **1932**, 2643.
(2) Judefind and Reid, *J. Am. Chem. Soc.*, **42**, 1043 (1920).
(3) Malone and Reid, *Ibid.*, **51**, 3424 (1929).
(4) Matignon, Moreau, and Dode, *Bull. soc. chim.*, [5] **1**, 1313 (1934).
(5) Mulliken, "Identification of Pure Organic Compounds," Vol. 1, p. 111, New York, John Wiley & Sons, 1904.
(6) Pardee and Reid, J. Ind. Eng. Chem., **12**, 129 (1920).
(7) Reid, *J. Am. Chem. Soc.*, **39**, 124 (1917).
(8) Shriner and Cox, *Ibid.*, **53**, 1601 (1931).

Received July 13, 1937. Contribution 611, California Institute of Technology.

Estimation of Riboflavin

A Simple Fluorescent Method

S. M. WEISBERG AND I. LEVIN, Research Laboratories, Sealtest, Inc., Baltimore, Md.

T IS WELL established that riboflavin (also known as vitamin B_2, lactoflavin) emits a yellowish green fluorescence der ultraviolet light. Cohen (*3*, *4*) and Supplee (*10*) have scribed methods for utilizing this property to assay for the ntent of riboflavin. The present method differs from that the other workers in its greater simplicity from the opera-'s standpoint, requiring only inexpensive fluorescent standls.

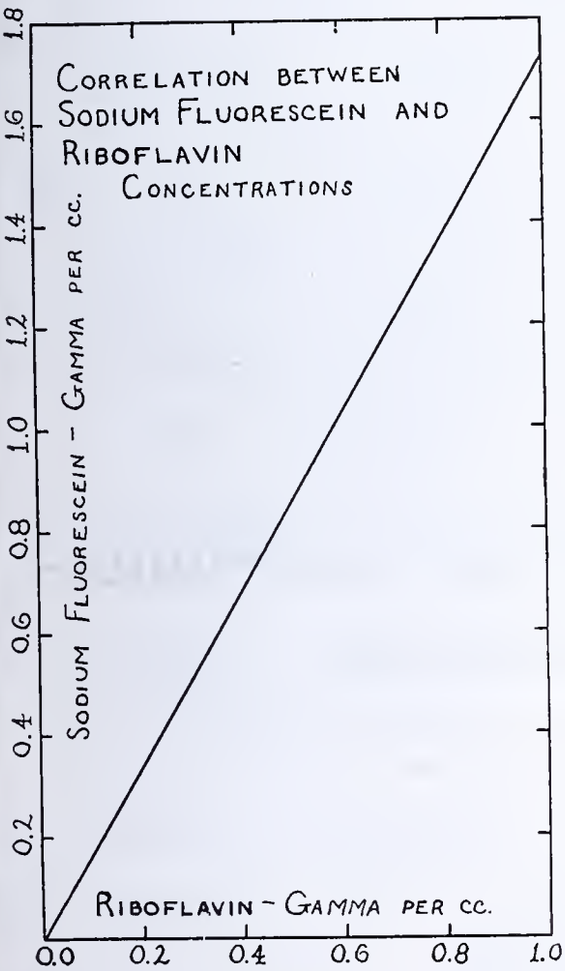

FIGURE 1

In order to prepare a sample for the fluorescence analysis a ear solution must be obtained and extraneous coloring marials as well as fluorescing substances other than riboflavin ust be removed. A procedure that has given good results th dairy products is as follows:

Reflux a weighed sample of the solid product three times with ethanol acidulated with acetic acid, in the presence of carbon oxide and in the absence of light, washing the residue with esh methanol between extractions. Add a volume of acetone ual to the combined methanol extracts and refrigerate overnight −17.78° C. (0° F.) to precipitate flocculent impurities. lter and condense filtrate *in vacuo*, adding enough water to sure removal of the organic solvents and to leave the ribovin in aqueous solution. Make this final solution up to a finite volume and assay. If any turbidity is present, it must removed by filtration, or if of fatty origin it may be removed ether extraction.

This method is also applicable to liquid samples, but no fluxing is required. The methanol carries the riboflavin into solution and the acetone precipitates out extraneous matter from the methanol.

Another procedure for extracting the riboflavin content for analysis is as follows:

Reflux a weighed sample three times with methanol in the presence of carbon dioxide and in the absence of light. Adsorb the riboflavin from the methanol on British fuller's earth, using approximately 10 grams of earth for each 453.6 grams (1 pound) of original sample, assuming the potency in riboflavin to be of the order of whey powder or dried yeast. Centrifuge and wash the earth, then elute with a mixture consisting of pyridene 1, methanol 1, water 4. Thirty-six cubic centimeters of mixture are required per gram of adsorbate. A second elution should also be made on the earth. Filter the combined eluates, condense *in vacuo*, and remove the colloidal fuller's earth by adding methanol and filtering. Add water and condense the filtrate further to remove organic solvents. Then make the liquid up to volume and assay. A control should also be made by eluting the British fuller's earth and following through as above, deducting any fluorescence value deriving from the earth itself and reagents.

Other procedures which might be used wholly or in part for purifying riboflavin-containing samples for the fluorescence assay are those of Booher (*2*), Seidell (*7*), Itter, Orent, and McCollum (*5*), Supplee, Ansbacher, and Bender (*8*), Bisbey and Sherman (*1*), and Supplee, Ansbacher, and Flanigan (*9*).

In the authors' method sodium fluorescein (Eastman Kodak Company) in an aqueous solution of 0.001 per cent is used for making up the fluorescent standards, and the fluorescence of the unknown aqueous solution, purified so as to contain only riboflavin as the fluorescing agent, is compared with the sodium fluorescein standards under ultraviolet light. The fluorescein standards are calibrated by means of a solution of synthetic riboflavin (Winthrop Chemical Company).

By reference to Table I and Figure 1 the correlation between the fluorescence intensity of sodium fluorescein and riboflavin in water may be seen. This curve was obtained from the observations of three independent observers.

The fluorescein standards are made up in terms of 0.1 to 1.0 gamma of riboflavin per cc. Higher concentrations are difficult to match, owing to the high intensity of the fluorescence and the green component of the sodium fluorescein. The purified unknown solution is diluted so that it falls into the range of 0.1 to 1.0 gamma per cc. and the various dilutions are multiplied by the dilution factor to obtain the flavin concentration.

In making the assay, various dilutions of the unknown sample are made up to 50 cc., placed in French square bottles of 60-cc. (2-ounce) capacity, and compared under ultraviolet light with the fluorescein standards contained in similar

TABLE I. CORRELATION BETWEEN RIBOFLAVIN AND SODIUM FLUORESCEIN CONCENTRATIONS

Riboflavin *Gamma/cc.*	Sodium Fluorescein *Gamma/cc.*	0.001% Sodium Fluorescein Made to 50 Cc. *Cc.*
0.1	0.17	0.85
0.2	0.34	1.70
0.3	0.51	2.55
0.4	0.68	3.40
0.5	0.86	4.30
0.6	1.03	5.15
0.7	1.20	6.00
0.8	1.37	6.85
0.9	1.54	7.70
1.0	1.72	8.60

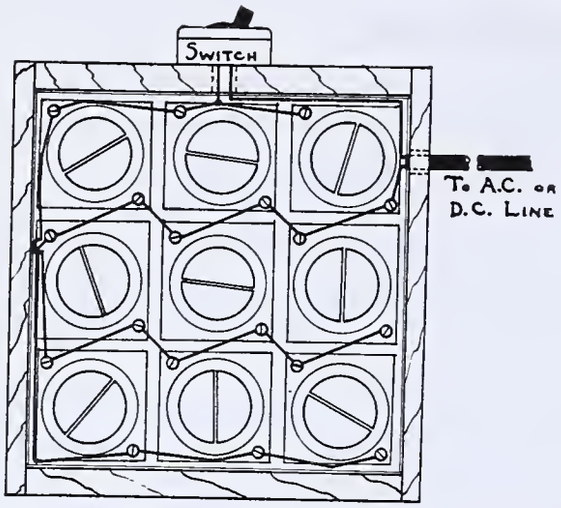

FIGURE 2. ULTRAVIOLET SOURCE FOR RIBOFLAVIN DETERMINATION. TOP VIEW

bottles. Glass or cork stoppers may be used, but rubber stoppers must not be used, as enough solution of rubber takes place to impart a blue fluorescence to the solutions.

The ultraviolet light is obtained from nine Blue Glow (argon mixed gas) lamps (General Electric Vapor Lamp Company, Hoboken, N. J.) mounted in a box similar to that described by Rorimer (*6*), either of wood or metal, and wired as shown in Figure 2. The filter used is the 16.25-cm. (6.5-inch) square Corning glass, Violet Ultra, No. 586 (Corning Glass Works, Corning, N. Y.) which transmit a rather monochromatic beam at 3650 Å.; it was chosen be cause very little blue and other visible light can pass throug The filter constitutes the lid of the box and a determinatio is made by placing the sodium fluorescein standard, togethe with the riboflavin unknown, on the glass filter with lamp underneath, as shown in Figure 3.

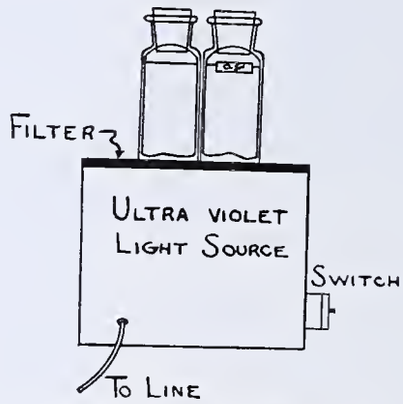

FIGURE 3. ARRANGEMENT OF EQUIPMENT FOR MEASURING RIBOFLAVIN CONTENT

Literature Cited

(1) Bisbey, B., and Sherman, H. C *J. Biol. Chem.*, **112**, 415 (1935)
(2) Booher, L. E., *Ibid.*, **102**, 3 (1933).
(3) Cohen, F. H., *Arch. néerlanc physiol.*, **20**, 167 (1935).
(4) Cohen, F. H., *Rec. trav. chim.*, 54 No. 2, 133 (1935).
(5) Itter, S., Orent, E. R., and Mc Collum, E. V., *J. Biol. Chem* **108**, 579 (1935).
(6) Rorimer, J. J., *Museum News*, 13 No. 15 (1936).
(7) Seidell, A., *J. Biol. Chem.*, **100** 195 (1933).
(8) Supplee, G. C., Ansbacher, S. and Bender, R. C., *Ibid.*, **110** 365 (1935).
(9) Supplee, G. C., Ansbacher, S. and Flanigan, G. E., *J. Dair Sci.*, **19**, 215 (1936).
(10) Supplee, G. C., Ansbacher, S., Flanigan, G. E., and Hanford Z. M., *Ibid.*, **19**, No. 3, 215 (1936).

RECEIVED August 5, 1937.

Analysis of Crude Phosphorus and Sludges Containing Phosphorus

EARL H. BROWN,[1] HENRY H. MORGAN, AND EUGENE R. RUSHTON
Tennessee Valley Authority, Wilson Dam, Ala.

THE analysis of phosphorus produced from rock phosphate by the electric furnace method has presented a number of problems. The crude phosphorus, condensed from the furnace gas by a water spray, contains water, oxides of phosphorus, rock dust, silica, and other impurities. For control purposes and for the study of furnace operation it was necessary to determine the phosphorus content of samples ranging from nearly pure phosphorus to aqueous sludges containing very little phosphorus.

It was necessary to develop methods for the handling and weighing of samples, separation of the phosphorus from water and insoluble residues, and determination of the phosphorus extracted. A search of the available literature failed to reveal a method meeting the requirements. Most of the published work was based on solution of the phosphorus in a suitable organic solvent, followed by oxidation to the orthophosphate and determination of the latter by conventional methods.

Buehrer and Schupp (*1*) described phosphorus determinations employing the reaction between phosphorus and hydriodic acid with subsequent titration of the iodine liberated. The oxidation alone required 4 hours, and the time required for the total analysis was probably 7 or 8 hours. The apparatus was too complicated for routine analyses involving four or more simultaneous determinations.

Christomanos (*2*) treated phosphorus in solution in benzene or ether with a solution of copper nitrate, which resulted in the precipitation of copper phosphide. The organic solvent was removed by evaporation and the phosphorus was converted to orthophosphoric acid by oxidation with bromine and nitric acid, from which point the analysis proceeded by the standard gravimetric method. It was this method of treatment that was thoroughly checked and incorporated in the complete analysis described below.

Preparation of the Samples

In the case of aqueous phosphorus sludges, the sample is shaken thoroughly and transferred to four 40-ml. heavy-duty centrifuge tubes which are then centrifuged for 10 minutes at 2500 r. p. m. The volumes of supernatant liquid and solids are determined, the liquid is discarded if not wanted for further analysis, and the solids are rinsed with water out of the tubes into a small beaker. Four tubes are taken in order to obtain sufficient solid matter for the phosphorus extraction.

In the case of crude solid phosphorus, the sample is granulated by melting it under water in a large beaker or stoppered flask, followed by cooling in running water while vigorously stirring the melt.

[1] Present address, General Chemical Company, 40 Rector St., New York, N. Y.

SAMPLING PURE IOSPHORUS. In the urse of the development of a method for e analysis, it was cessary to handle and igh many samples pure phosphorus. ie apparatus shown Figure 1 was devised this phase of the ork.

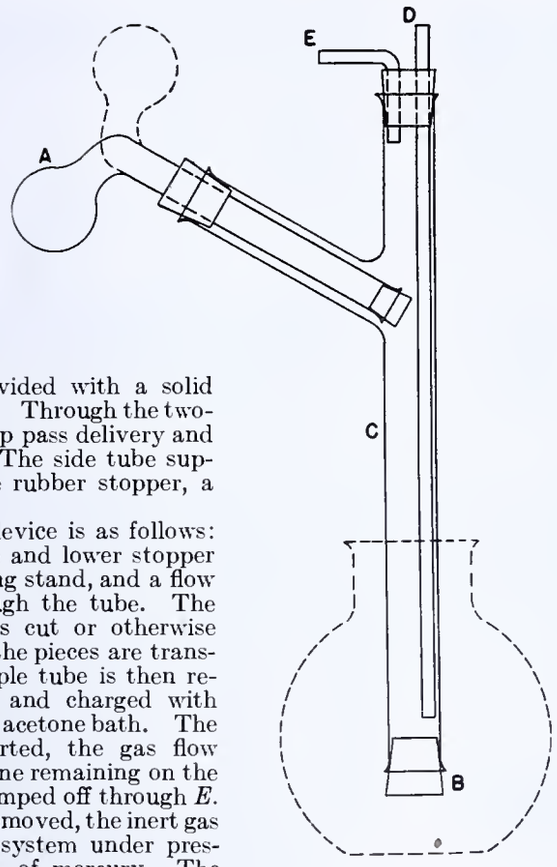

FIGURE 1. PHOSPHORUS DRYING AND WEIGHING APPARATUS

The glass tube, *C*, is provided with a solid bber stopper at the bottom. Through the two-le rubber stopper at the top pass delivery and it tubes for an inert gas. The side tube sup-rts by means of a one-hole rubber stopper, a mple tube, *A*.

The manipulation of the device is as follows: ie Y-tube with sample tube and lower stopper place is supported by a ring stand, and a flow inert gas is started through the tube. The osphorus to be weighed is cut or otherwise bdivided under water and the pieces are trans-red to acetone. The sample tube is then re-oved from the side tube and charged with eces of phosphorus from the acetone bath. The mple tube is then reinserted, the gas flow opped at *D*, and the acetone remaining on the rface of the phosphorus pumped off through *E*. The acetone having been removed, the inert gas again passed through the system under pres-re of approximately 1 cm. of mercury. The mple tube is then removed, stoppered, and eighed. After weighing, it is unstoppered and placed in the side arm. The lower stopper, is removed, the regular gas exit, *E*, is closed, and e vessel to which the phosphorus is to be trans-rred is placed in such a position that it can easily be flooded with e inert gas during the transfer of phosphorus. The transfer accomplished by rotating the sample tube about its long axis, us raising the bulb and allowing the pieces of phosphorus to n out.

Sufficient material having been removed, the sample tube is ain removed, stoppered, and weighed, the amount of phos-iorus removed being determined by difference.

The number of samples that can be handled with one filling the bulb will, of course, depend on the amount of material quired per sample and size of bulb.

The successful use of this apparatus demands that there be slight flow or pressure of the inert gas at all times, except iring the drying operation. This is easily accomplished by nnecting a gas safety tube or bubbler the gas line.

Determination of Water and Benzene-Insoluble Residue

APPARATUS AND REAGENTS. The traction apparatus is shown in Fig-es 2 and 3 and is a modification of ie apparatus described by Dean and ark (*3*) for the analysis of soap and getable products. The flask, water ap, and condenser are connected by andard taper ground joints. The isk is heated in a water bath consist-g of a cylindrical can of 16-gage eet copper 22.5 cm. (9 inches) high d 15 cm. (6 inches) in diameter, rovided with a 600-watt immersion eater fixed parallel to and 2.5 cm. inch) above the bottom.

The reagents employed are: copper itrate solution, 25 per cent by weight; benzene, C. P.; nitric acid, 15 *N* saturated with bromine.

METHOD. Three layers of filter paper are fitted into the bottom of a Gooch crucible. A perforated porcelain plate fitting inside the crucible is also provided and all are weighed in a closed weighing bottle. The sample is washed into the crucible and the excess water is removed by gentle suction, leaving the material moist enough to prevent its igniting. The sample is covered with the perforated plate, the crucible returned to the weighing bottle and reweighed. This weight less the tare represents the weight of the wet sample. A covering of benzene is poured on the sample and the crucible is set in the neck of an extraction flask containing about 150 ml. of benzene. Assembly of the apparatus is completed as shown in Figures 2 and 3 and the sample is extracted for about 2 hours, the time depending on the nature and amount of sample. At the end of the extraction period the flask and contents are cooled to room temperature, the crucible is removed, dried at 105° C., and weighed in the original weighing bottle. The weight, after subtracting the tare, is the amount of benzene-insoluble matter. The water introduced with the sample is collected and measured in the graduated trap below the condenser. From this volume the dry weight of the sample is found and this gives the basis for percentage calculations.

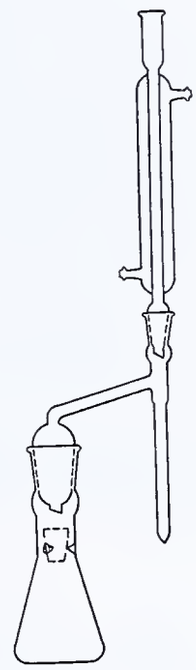

FIGURE 2. EXTRACTION APPARATUS

Oxidation and Determination of Phosphorus

The benzene is transferred from the extraction apparatus to a 250-ml. volumetric flask, the apparatus is washed with benzene, and the washings are added to the flask. Benzene is added to make 250 ml., the contents of the flask are thoroughly mixed, and two aliquots of 10 ml. each are transferred to 20-ml. portions of 25 per cent copper nitrate solution in 100-ml. Erlenmeyer flasks. The flasks are stoppered and shaken vigorously at 2-minute intervals for 10 minutes, the stoppers and sides of the flasks are washed down with water, 50 ml. of hot water are added, and the mixture

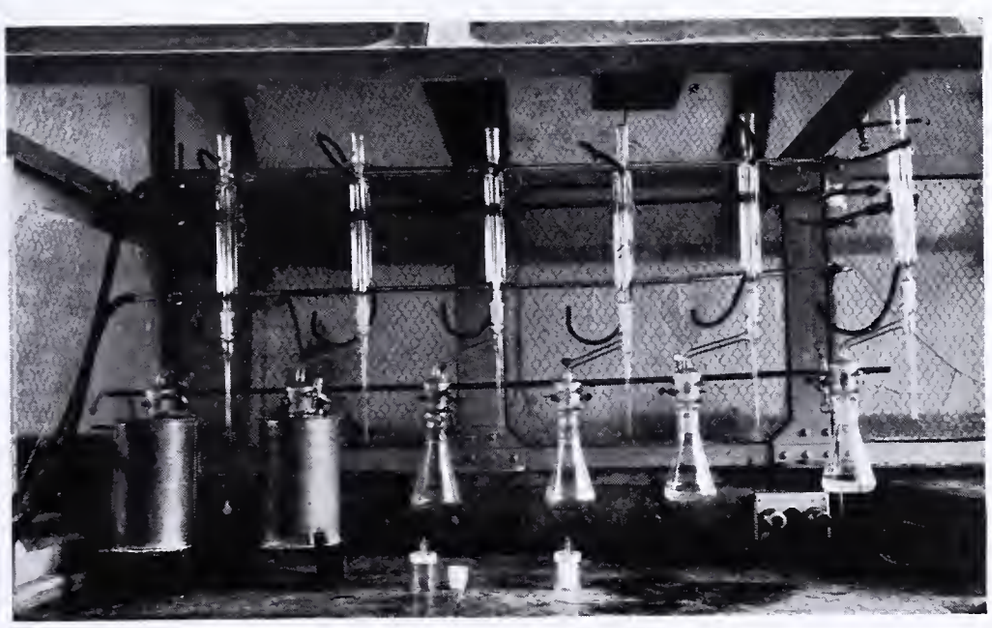

FIGURE 3. PHOSPHORUS EXTRACTION APPARATUS

is heated at about 100° C. until all benzene is expelled. A few glass beads are added to the flask to prevent bumping. Heating is then stopped, 5 ml. of 15 *N* nitric acid saturated with bromine are added cautiously, and the mixture is allowed to stand until action ceases; then about 7 ml. more of this reagent are added and the mixture is boiled until all fumes of nitric acid and bromine are expelled. The solution is then filtered through a quick filter into 250-ml. beakers, with thorough washing with hot water. The volume at this stage should be about 100 ml.

Table I. Comparison of Analyses by Volumetric and Gravimetric Methods

(Solutions from treatment of phosphorus by copper nitrate)

Phosphorus Taken	Phosphorus Recovered Volumetrically		Deviation from Mean	Phosphorus Recovered Gravimetrically		Deviation from Mean
Gram	*Gram*	%	%	*Gram*	%	%
0.09320	0.09315	99.9	1.3	0.09312	99.9	0.9
0.09524	0.09510	99.8	1.2	0.09513	99.9	0.9
0.07424	0.07370	99.3	0.7	0.07342	98.9	0.1
0.09308	0.08991	96.6	2.0	0.09154	98.3	0.7
0.07356	0.07110	96.7	1.9	0.07217	98.1	0.9
0.08324	0.08321	99.9	1.3	0.08323	100.0	1.0
0.06236	0.06116	98.1	0.5	0.06122	98.2	0.8
0.08260	0.08213	99.4	0.8	0.08164	98.8	0.2
0.07080	0.07003	98.9	0.3	0.06966	98.4	0.6
0.06832	0.06657	97.4	1.2	0.06813	99.7	0.7
Mean P_4 recovery		98.6			99.0	
Average deviation from mean			1.1			0.6
Average deviation from mean / Arithmetical mean			About 11 parts in 1000		About 6 parts in 1000	

The solutions prepared as described above, containing the phosphorus as orthophosphate, are analyzed for phosphorus either gravimetrically or volumetrically according to standard methods.

Autoignition of Solutions

Careful observations were made of the solutions of phosphorus in benzene regarding their tendency toward autoignition. It was found that while nearly saturated solutions smoked increasingly with increase in temperature, there was no autoignition. Where a solution was allowed to evaporate spontaneously, the phosphorus did not burn until the benzene had evaporated. When pieces of elemental phosphorus were taken from immersion in benzene and in acetone, complete evaporation of the solvent seemed necessary before ignition took place. A film of benzene or acetone definitely inhibits autoignition.

Comparison of Gravimetric and Volumetric Methods

The saving of time being important in the control laboratory, gravimetric and volumetric methods were run on ten samples of pure phosphorus dissolved in benzene and treated with copper nitrate, bromine, and nitric acid as described above. The results are given in Table I.

Accuracy of the Method

Samples of phosphorus; phosphorus, sand, and water; and phosphorus, precipitated silica, and water were analyzed according to the above procedure, the analyses being completed by the gravimetric method. The data are given in Tables II, III, and IV.

The results indicate that a solution of phosphorus in benzene can be digested under a reflux condenser for a period of at least 90 minutes without loss of phosphorus and that the procedure is suitable for the extraction of phosphorus from sludges and crude material. Samples containing as much as 2.6 grams of phosphorus were analyzed with fair accuracy and precision.

In practice, six determinations are run at one time, requiring about 6 hours for a complete analysis.

Table II. Extraction of Known Weights of Phosphorus in Gooch Crucibles

Benzene Used	Phosphorus Taken	Phosphorus Recovered		Deviation from Mean
Ml.	*Gram*	*Gram*	%	%
170	1.699	1.698	99.8	1.3
		1.663	97.8	0.7
170	2.062	2.050	99.4	0.9
		2.050	99.4	0.9
170	1.311	1.283	97.8	0.7
		1.273	97.0	1.5
170	3.403	3.350	98.5	0.0
		3.330	97.9	0.6
Mean P_4 recovery			98.5	
Average deviation from mean				0.8
Average deviation from mean / Arithmetical mean			About 8 parts in 1000	
Constant error, assuming 100 per cent pure P_4			1.5 parts in 100	

Table III. Known Weights of Phosphorus Mixed with Sand and Water and Extracted in Crucibles

Benzene Used	Sand 80-Mesh	Water	Phosphorus Taken	Phosphorus Recovered		Deviation from Mean
Ml.	*Gram*	*Ml.*	*Gram*	*Gram*	%	%
150	0.15	1	1.963	1.963	100.0	0.5
150	0.15	1	2.628	2.632	100.1	0.4
150	0.15	1	2.259	2.271	100.5	0.0
150	0.15	1	2.407	2.399	99.7	0.8
150	0.50	2	1.932	1.956	101.2	0.7
150	0.50	2	2.318	2.346	101.2	0.7
150	0.20	2	1.739	1.779	102.3	1.8
150	0.20	2	2.189	2.204	100.7	0.2
150	0.20	2	2.307	2.306	99.9	0.6
150	0.20	2	2.568	2.566	99.9	0.6
Mean P_4 recovery					100.5	
Average deviation from mean						0.63
Average deviation from mean / Arithmetical mean				About 6 parts in 1000		
Constant error				5 parts in 1000		

Table IV. Known Weights of Phosphorus, Precipitated Silica, and Water Extracted in Crucibles

Benzene Used	Precipitated Silica	Water	Phosphorus Taken	Phosphorus Recovered		Deviation from Mean
Ml.	*Gram*	*Ml.*	*Gram*	*Gram*	%	%
150	0.20	Nil	2.381	2.395	100.6	0.7
150	0.20	2	2.330	2.323	99.7	0.2
150	0.20	2	1.856	1.881	101.3	1.4
150	0.20	2	2.327	2.324	99.9	0.0
150	0.20	2	1.839	1.837	99.9	0.0
150	0.20	2	2.081	2.070	99.5	0.4
150	0.20	2	1.559	1.576	101.1	1.2
150	0.20	2	2.065	2.022	97.9	2.0
150	0.20	3	1.770	1.767	99.8	0.1
150	0.20	3	1.708	1.699	99.5	0.4
Mean P_4 recovery					99.9	
Average deviation from mean						0.64
Average deviation from mean / Arithmetical mean				About 6 parts in 1000		
Constant error				1 part in 1000		

For the work for which the above procedure was developed, the final determination of phosphorus by the volumetric method was satisfactory, resulting in a great saving of time.

Summary

An apparatus is described for the separation of crude phosphorus and phosphorus-bearing sludges into phosphorus, water, and benzene-insoluble residue.

A method is given for determining phosphorus in crude phosphorus and phosphorus-bearing sludges, as well as a technic for handling and weighing small samples of pure phosphorus.

Literature Cited

(1) Buehrer and Schupp, *J. Am. Chem. Soc.*, 49, 9 (1927).
(2) Christomanos, *Z. anorg. Chem.*, 41, 305–14 (1904).
(3) Dean and Stark, J. Ind. Eng. Chem., 12, 486 (1920).

Received August 5, 1937.

Photometric Determination of Added Phosphorus in Oils

PAUL GOODLOE

Research and Development Division, General Laboratories, Socony-Vacuum Oil Co., Inc., Paulsboro, N. J.

A reliable photometric method for the determination of phosphorus, particularly adapted for the control of small amounts of added phosphorus in oils, is described. An accuracy of 0.001 per cent has been demonstrated. Less than 1 hour is required for a single complete analysis.

A PHOTOELECTRIC method for the determination of phosphorus in amounts as small as 0.001 mg. was recently published by Eddy and DeEds (*1*). A similar method has been employed in this laboratory for about a year for the control of the addition of phosphorus compounds to mineral oils, and its reliability and ease of application warrant its being reported.

The organic phosphorus in oil solution is changed to inorganic phosphate in aqueous solution by the simple and rapid procedure of igniting the sample in a crucible with zinc oxide, followed by solution in dilute sulfuric acid. The colorimetric method chosen after a number of trials is based on the work of Zinzadze (*6*) and Farber and Youngburg (*2*), and the electric colorimeter developed by Story and Kalichevsky (*5*) has been employed throughout with consistent success.

Standard Solutions

10 *N* Sulfuric Acid. Add 450 cc. of c. p. phosphorus- and arsenic-free concentrated sulfuric acid (sp. gr. 1.84) to 1150 cc. of distilled water, mix, and cool. Titrate the solution and dilute with the calculated amount of water (5 to 10 cc.) to exactly 10.0 *N*.

Molybdate Reagent. Place 64 grams of ammonium heptamolybdate in a 1-liter volumetric flask, add 300 to 400 cc. of distilled water and 500 cc. of 10 *N* sulfuric acid, dissolve, and make to 1 liter. This solution keeps for at least 3 months.

Stannous Chloride Solution. Make a stock solution by placing 5 grams stannous chloride dihydrate (A. C. S. Standard) in a small glass-stoppered brown bottle, adding 25 cc. of concentrated c. p. hydrochloric acid, and shaking until dissolved. This stock solution should be renewed each 2 weeks. Each day pipet out 1 cc. of the stock solution and make to 100 cc. for use. The diluted solution deteriorates in 12 to 15 hours.

Standard Phosphate Solution. Dissolve 4.3917 grams of c. p. monobasic potassium phosphate in 50 cc. of 10 *N* sulfuric acid and 500 cc. of distilled water. Add a few crystals (not over 0.1 gram) of potassium permanganate as preservative, and make to 1 liter. Pipet out 100 cc. of this solution and make to 1 liter; the resulting solution contains 0.1 mg. of phosphorus per cc. By again diluting 100 cc. to 1 liter, make a solution containing 0.01 mg. of phosphorus per cc.

Procedure

Weigh the sample (1 gram) into a small Coors crucible with an accuracy of 0.1 mg. and cover the oil with an approximately equal weight of zinc oxide.

Place the crucible and contents in a tilted position on a clay triangle, heat with a large luminous flame until the oil has been burned up slowly, then ignite until the crucible is entirely free from carbon. Allow the crucible to cool a little and place in a 250-cc. beaker, dumping out the contents by tapping the crucible against the side of the beaker. Cover with distilled water and add approximately 10 cc. of 10 *N* sulfuric acid.

Heat on a hot plate with occasional stirring until solution is complete and then remove the crucible with washing. Transfer the solution to a volumetric flask and make up to 250 cc. Of this solution pipet 25 cc. (0.1 of original sample) into a 100-cc. volumetric flask and make to about 50 cc. with distilled water. Make alkaline by adding 20 per cent sodium carbonate solution drop by drop until the solution is turbid, owing to the appearance of zinc hydroxide. Add 10 *N* sulfuric acid drop by drop until the solution clears on the addition of the last drop, swirling after the addition of each drop (2,4-dinitrophenol, *6*, may be used as a yellow to colorless indicator here if a more apparent end point is desired).

To the faintly acid sample in a little less than 60-cc. volume, add 10 cc. of 10 *N* sulfuric acid followed by 10 cc. of the molybdate reagent. Wash down the sides of the flask until the contents are about 90 cc. and mix by swirling. While swirling, add 5 cc. of the diluted stannous chloride solution (1 cc. of stock solution diluted to 100 cc.), noting the time at which it is added, make to100 cc., close with a glass stopper, and mix.

Fill a 2.5-cm. (1-inch) cell used in the electric colorimeter with a part of the blue solution and read the intensity of the transmitted light in the colorimeter exactly 10 minutes after the addition of the stannous chloride. From the scale reading so obtained and the weight of the sample, the percentage of phosphorus can be calculated by means of an equation determined by prior calibration of the colorimeter with standard phosphate solution.

Ashing

Other substances may be used in place of zinc oxide, but none seems to equal it in all respects. Howk and DeTurk (*3*) have used calcium carbonate in the ashing of plant material, but calcium compounds cannot be used here because the subsequent colorimetric method is carried out in sulfuric acid solution. The alkali carbonates can be used, but they require longer ignition and are more difficult to remove from the crucible than zinc oxide. Magnesium nitrate has been used as an ashing material for biological serums by Roepke (*4*), but the presence of magnesium ion has a decided influence on the color to be produced later and the amount of magnesium nitrate used must be exactly the same each time. Nitrates interfere with the formation of the color unless they are completely eliminated by decomposition during the ignition.

Zinc ion, in the small amounts used, has only a negligible effect on color development, and pure grades of zinc oxide are available. The formation of yellow zinc peroxide when the oxide is heated makes this material an active agent in the oxidation process and the voluminous nature of the oxide lends itself particularly well for ashing purposes.

Operation of Colorimeter

The colorimeter has been described elsewhere (*5*) and only brief directions for its use need be given here. The constant ammeter reading is obtained with the scale at zero and from this figure the blank is subtracted to obtain a corrected ammeter reading. The cell containing the blue solution is introduced and the scale is moved until the ammeter records the corrected reading. The scale reading at this point is then related to the amount of phosphorus in the solution.

The blank is determined by taking a sample of phosphorus-free oil through exactly the same procedure as is applied to an unknown. The resulting 100 cc. of solution should be practically water-white if the reagents are free from phosphorus. On introducing a cell containing this solution into the colorimeter, with the scale remaining at zero, a deflection of the ammeter pointer will be noted. This difference in

TABLE I. EXPERIMENTAL DATA

Phosphorus	Scale Reading	Phosphorus Calculated by Equation 1	Absolute Error
Mg.		*Mg.*	*Mg.*
0.001	2.5	...	...
0.002	2.4	...	...
0.003	3.1	0.0001	0.0029
0.004	5.9	0.0035	0.0005
0.005	6.7	0.0045	0.0005
0.006	7.4	0.0054	0.0006
0.007	8.4	0.0065	0.0005
0.008	9.2	0.0076	0.0004
0.009	10.1	0.0086	0.0004
0.010	10.9	0.0096	0.0004
0.011	12.0	0.0109	0.0001
0.012	12.8	0.0119	0.0001
0.013	13.8	0.0131	0.0001
0.014	14.5	0.0140	0.0000
0.015	15.3	0.0150	0.0000
0.016	15.9	0.0157	0.0003
0.017	16.9	0.0169	0.0001
0.018	18.1	0.0184	0.0004
0.019	18.2	0.0185	0.0005
0.020	19.9	0.0206	0.0006
0.021	20.7	0.0215	0.0005
0.022	21.1	0.0220	0.0000
0.023	21.8	0.0229	0.0001
0.024	22.6	0.0239	0.0001
0.025	23.9	0.0254	0.0004
0.026	25.2	0.0270	0.0010
0.027	24.7	0.0264	0.0006
0.028	26.0	0.0280	0.0000
0.029	26.9	0.0290	0.0000
0.030	27.0	0.0292	0.0008
0.031	28.4	0.0309	0.0001
0.032	29.6	0.0324	0.0004
0.033	30.1	0.0330	0.0000
0.034	31.7	0.0350	0.0010
0.035	31.7	0.0350	0.0000
0.036	32.4	0.0358	0.0002
0.037	33.4	0.0370	0.0000
0.038	34.6	0.0385	0.0005
0.039	34.7	0.0386	0.0004
0.040	36.2	0.0404	0.0004
0.041	36.7	0.0411	0.0001
0.042	37.0	0.0414	0.0006
0.043	37.8	0.0425	0.0005
0.044	38.0	0.0426	0.0014
0.045	38.6	0.0434	0.0016
0.046	37.7	0.0423	0.0037
0.047	39.3	0.0442	0.0028
0.048	39.3	0.0442	0.0038

the ammeter readings when the colorimeter is empty and when it contains a cell filled with the blank solution is the blank. When the blank is applied, the corrected ammeter reading so obtained is actually the reading the ammeter would have if the colorimeter contained the blank solution in the cell.

The blank should detect and make correction for minor changes in the reagents or the colorimeter and give warning of error when major changes occur. It is wise to determine the blank at the beginning of each work day, although experience has shown that it changes only when fresh reagents are made up or those in use deteriorate.

The colorimeter must be turned on about 15 minutes before use, as it requires about this time to warm up to equilibrium. Readings of the milliammeter should be made to one-fourth division and of the colorimeter scale to one-tenth division.

Calibration

Using standard phosphate solution, known amounts of phosphorus (0.01, 0.02, and 0.03 mg. are suggested) can be placed in 100-cc. volumetric flasks, and diluted with water, reagents added and color developed, and the scale reading corresponding to these amounts of phosphorus determined. Essentially a straight line can then be drawn through these points and the equation of this line can be used to calculate the amount of phosphorus from the scale reading.

For these known samples of standard phosphate the color is developed as follows: The samples are diluted with distilled water to about 50-cc. volume and then 10 cc. of 10 *N* sulfuric acid, 10 cc. of molybdate reagent, and 5 cc. of stannous chloride solution are added in the order given. The intensity of the light transmitted is read 10 minutes after the addition of the stannous chloride. The color begins to develop within 3 minutes and in about 6 minutes has reached a maximum intensity which is maintained for about 30 minutes.

A blank must also be used in connection with the standard phosphate samples for calibration and in general it will differ from the blank obtained on a sample of phosphorus-free oil which is ignited and then carried through the procedure. The calibration blank is run using a 50-cc. sample of distilled water to which are added the sulfuric acid, molybdate reagent, and stannous chloride solution. Again the scale is left at zero and the deflection of the ammeter pointer caused by the introduction of the cell containing the blank solution into the colorimeter is called the blank. It is used in the same way as pointed out above.

With the two colorimeters now in use, the following equations were determined empirically, constants being rounded off:

$$\text{Mg. of phosphorus} = \frac{\text{scale reading} - 3}{820} \quad (1)$$

$$\text{Mg. of phosphorus} = \frac{\text{scale reading} - 1}{1000} \quad (2)$$

To give the per cent of phosphorus in the oil these equations become:

$$\text{Per cent of phosphorus} = \frac{\text{scale reading} - 3}{8.2 \times \text{mg. of sample taken}} \quad (3)$$

$$\text{Per cent of phosphorus} = \frac{\text{scale reading} - 1}{10 \times \text{mg. of sample taken}} \quad (4)$$

In Equations 3 and 4 the milligrams of sample taken do not refer to the weight of the oil ignited, but to an aliquot of this weight. This aliquot is determined by the amount of the standard volume of solution taken after ignition. This permits taking several different aliquots of the solution until one falling in the correct range is obtained.

Table I gives the experimental data obtained in the calibration of the first colorimeter and the calculation of Equation 1. It includes the values calculated from the scale readings by means of Equation 1 to indicate the degree of applicability of this equation.

Discussion

As can be seen from Table I, the straight-line function holds only when the phosphorus in the sample lies between 0.005 and 0.04 mg., but if the sample is chosen so that the amount of phosphorus taken lies between these limits, the method is applicable and accurate to 0.001 per cent. Thus, the directions given apply to oils containing 0.005 to 0.04 per cent of phosphorus. If the oil (or other organic substance) contains only 0.001 per cent of phosphorus, this can be detected accurately by taking a 1-gram sample which would contain 0.01 mg. of phosphorus. Furthermore, by careful dilutions, substances containing much larger quantities of phosphorus may be analyzed by this method. Preliminary results indicate that pure organic compounds containing up to 10 per cent of phosphorus are susceptible to analysis by this method with an accuracy approaching 0.1 per cent.

An outstanding advantage possessed by this method is that the time required for a complete analysis as outlined is less than 1 hour. If several samples are carried through together, which is easily effected in practice, the time required is reduced to 0.5 hour per sample.

The final acidity of the colored solutions as prepared in this method is 1.5 *N*. The necessity for this high concentration of acid is obvious from experimental results given in Table II. Farber and Youngburg (*2*), employing an almost identi-

al procedure, have the final acidity of their colored solutions adjusted to be only 1 N, and in a similar colorimetric method Zinzadze (*6*) uses a final acidity of 0.35 N. The Zinzadze method employs molybdenum trioxide in place of the ammonium heptamolybdate used here.

TABLE II. EXPERIMENTAL DATA

Sample	Scale Reading	Acid Normality
Blank	76.5	0.5
Blank	25.0	0.75
Blank	9.3	1.0
Blank	1.2	1.25
Blank	0.2	1.5

Interfering Substances

The interference of other substances in the development of the color in the methods based on the reduction of phosphomolybdate have been discussed by Zinzadze (*6*). The means employed here for overcoming the influence of small amounts of ferric iron in the sample, taken from Zinzadze's work, is as follows: Immediately following the addition of the 10 N sulfuric acid to the sample and before the addition of the molybdate reagent, 5 cc. of 16 per cent sodium metabisulfite solution are added and the flask is heated at about 100° C. for 1 hour. This procedure will take care of at least 0.2 mg. of iron.

Acknowledgment

The author wishes to acknowledge the coöperation of B. W. Story and C. W. Brown of this laboratory in the development of this method.

Literature Cited

(1) Eddy and DeEds, IND. ENG. CHEM., Anal. Ed., 9, 12 (1937).
(2) Farber and Youngburg, *Ibid.*, 4, 107 (1932).
(3) Howk and DeTurk, *Ibid.*, 4, 111 (1932).
(4) Roepke, *Ibid.*, 7, 78 (1935).
(5) Story and Kalichevsky, *Ibid.*, 5, 214 (1933).
(6) Zinzadze, *Ibid.*, 7, 227(1935).

RECEIVED August 16, 1937.

Determination of Chlorides and Bromides

L. A. REBER AND WALLACE M. McNABB
Department of Chemistry and Chemical Engineering, University of Pennsylvania, Philadelphia, Pa.

IT HAS been shown (*2*) that silver nitrate may be titrated with potassium iodide, using ceric ammonium sulfate and starch as indicators. As this method has never been applied to the determination of chlorides and bromides, it was considered desirable to learn its degree of accuracy as compared with the thiocyanate and the gravimetric methods. Pure potassium chloride and bromide were used for the analyses.

The procedures employed were essentially those given by Kolthoff and Sandell (*1*) as the Volhard method for chlorides. The directions were made more specific wherever it was considered advisable.

Analytical Procedure

PROCEDURE 1. Add 5 ml. of 6 N nitric acid to 25 ml. of 0.03658 N potassium chloride solution, and then 25 ml. of 0.1 N silver nitrate. Stir to coagulate the precipitate, filter, and wash the precipitate of silver chloride with 60 ml. of 1 N nitric acid. To the combined filtrate and washings add 3 ml. of 0.5 per cent starch solution and 0.1 ml. of 0.1 N ceric ammonium sulfate solution. Titrate the silver with 0.1 N potassium iodide solution to the appearance of a permanent blue-green color. Subtract 0.1 ml. from the buret reading as an indicator blank.

TABLE I. EXPERIMENTAL RESULTS

Method	Cl in KCl, %	Br in KBr, %
Procedure 1	47.67	67.46
	47.57	67.43
	47.67	67.43
	Av. 47.64	Av. 67.44
Procedure 2	47.40	67.61
	47.51	67.47
	47.40	67.54
	Av. 47.44	Av. 67.54
Volhard 1	47.68	67.48
	47.68	67.48
	47.68	67.48
	Av. 47.68	Av. 67.48
Volhard 2	47.62	67.40
	47.52	67.46
	47.42	67.46
	Av. 47.52	Av. 67.44
Gravimetric	47.56	67.42
	47.50	67.46
	47.52	67.44
	Av. 47.53	Av. 67.44

The same procedure was followed in analyzing a 0.08 N potassium bromide solution.

PROCEDURE 2. Add 15 ml. of 6 N nitric acid to 25 ml. of 0.03658 N potassium chloride solution, and then 25 ml. of 0.1 N silver nitrate. Dilute to the mark in a 100-ml. volumetric flask, mix thoroughly, filter through a dry filter, and reject the first portion of filtrate. Titrate 50 ml. of the subsequent filtrate with 0.1 N potassium iodide solution as previously described.

The same procedure was followed in analyzing a 0.08 N potassium bromide solution.

Volhard methods 1 and 2 are similar to procedures 1 and 2, respectively, except that the silver is titrated with a standard solution of potassium thiocyanate in the presence of ferric alum as indicator. A 0.03658 N potassium chloride solution and a 0.08 N potassium bromide solution were analyzed by these methods.

Finally, the solutions of potassium chloride and of potassium bromide were analyzed by a gravimetric method, precipitating and weighing silver chloride and silver bromide, respectively.

Summary

A method for determining chlorides and bromides is described, which compares favorably with the standard Volhard method and the gravimetric method. Iodides may be determined similarly, it being unnecessary to remove the precipitated silver iodide prior to titration. In the reverse titration, running silver nitrate into the iodide solution, the end point appeared too soon, introducing an error of about 1 per cent. This has been ascribed to adsorption of iodide ions by the silver iodide. The advantages of the new method lie in the ease of preparation of standard solutions and in their stability.

Literature Cited

(1) Kolthoff and Sandell, "Textbook of Quantitative Inorganic Analysis," p. 544, New York, Macmillan Co., 1936.
(2) McNabb and Bloom, IND. ENG. CHEM., Anal. Ed., 8, 167 (1936).

RECEIVED July 8, 1937.

Determination of Gold and Silver

By Recovery of Minute Amounts from Solution

WILLIAM E. CALDWELL AND KENNETH N. McLEOD
Oregon State College, Corvallis, Ore.

THE marked increase in activity in the recovery of gold from its ores and from various other sources accentuates want of improved methods of determination and recovery. This paper presents a study of the formation and effectiveness of semicolloidal mercurial residues in the recovery and determination of minute amounts of gold and silver from solution. Elaboration and modification of experimental procedure as reported by Yasuda (*4*) and earlier by Scheibler (*3*) have been developed.

A new collector of gold and silver from solution has been produced by adding to a gold- and silver-bearing solution ammonium hydroxide followed by mercurous salt solution. The black, somewhat gelatinous, mercury–mercuric amino salt residue thus formed replaces from solution and occludes noble metals as it settles through the solution.

Table I. Recovery of Gold and Silver from Dilute Solutions of Gold Chloride and Silver Nitrate

Volume of Solution	Gold Added	Silver Added	Gold Recovered	Silver Recovered
L.	*Mg.*	*Mg.*	*Mg.*	*Mg.*
2	0.62	6.306	0.618	6.082
40	0.62	3.29	0.60	3.06
40	0.015	...	0.014	...
40	0.015	...	0.015	...
10	0.079	...	0.075	...
10	1.80	...	1.74	...
10	0.0795	24.09	0.072	23.50
10	0.0159	24.85	0.012	24.80
10	1.54	...	1.49	...
10	0.385	16.22	0.375	15.75
40	0.08	...	0.08	...
40	0.015	...	0.014	...
40	0.26	10.46	0.22	8.65[a]
10	2.18	62.80	2.03	56.02[a]
40	0.19	10.47	0.18	8.05[a]
40	11.17	116.70	9.60	105.90[a]
10	0.86	22.66	0.83	18.09[a]

[a] The last five runs using H_2SO_4 show a somewhat lowered silver recovery.

Suggested Procedure

The following procedure has proved applicable to the determination and recovery of gold and silver in minute amounts from solution:

Two-, 10-, or 40-liter bottles (the 40-liter bottles being acid carboys) are nearly filled with water containing known or unknown amounts of gold and silver in solution. About 10 grams of clean powdered magnesium are added when taking 10-liter samples of solution. One hundred milliliters of 0.1 *M* mercuric chloride are introduced per 10 liters of water, and 100 ml. of concentrated hydrochloric acid are added per 10 grams of magnesium. The bottles are shaken, but the chemical action produces good agitation.

A fine gray precipitate of mercury–mercurous chloride settles to the bottom of the container in a few hours and includes in itself gold and silver from solution. Most of the clear solution may be siphoned off, allowing some water to remain with the residue in the bottom of the bottles. A little swirling motion and the residue is readily suspended in this water and may be easily obtained in a small filter paper. The residue is not voluminous, as but 2.7 grams of mercuric chloride are used per 10 liters of solution.

When making runs on 2 liters of solution, about one-half the quantity of chemicals suggested above is used. In using 40-liter carboy samples, two to three times the quantity of chemicals for 10-liter runs are used.

After partially drying the residue in the filter paper, about 10 grams of granular lead are scattered over the residue; the filter paper is folded up with the residue and lead therein, and placed on a large assay cupel. Ten grams more of granular lead are placed over and with the residue on the cupel. After cupellation in a small electric muffle furnace, a silver-gold bead is obtained and is weighed on a balance sensitive to 0.002 mg. Parting silver from gold with nitric acid, annealing the gold, and weighing the gold bead follow.

To determine the accuracy of the method, runs were made on several gold and silver solutions of known strength. Solutions were made by dissolving weighed amounts of pure gold in aqua regia and of silver in nitric acid and diluting with a large volume of water in bottles of 2, 10, and 40 liters' capacity. Reagents as detailed above were added, causing the fall of mercury–mercurous chloride through the solutions; residues were assayed as described. Results are shown in Table I.

The main source of error in carrying out this experimental procedure is in the cupellation process which follows the filtering of the mercurial residue. Normal cupellation losses are somewhat enhanced as the mercury vapors leave the residue-lead mixture. Good results have been obtained by allowing the residue to dry in the filter paper, removing it, and intimately mixing it with cupellation lead. A layer of the granular lead is spread on the cupel and the residue with lead mixture placed upon it. A covering of granular lead is also used. The wadded-up filter paper, if much residue remains upon it, may also be included in the cupellation mixture.

If the residue is large, or if greater accuracy is desired, the mercurial residue with its gold and silver content may be given a fusion or scorification to obtain a lead button for cupellation. The runs of Table I are those without use of scorification or fusion for added accuracy.

Gold solutions containing as little as 0.015 mg. of gold in 40 liters of solution were assayed. Obtaining 0.01 mg. of gold from 40 liters of solution is recovery and determination of one part of gold in four billion parts of water. Blank runs on reagents showed an almost indiscernible trace of gold.

Reducing agents for the production of a mercury–mercurous chloride cloud differ greatly in effectiveness. Stannous chloride, in proper concentration, added to mercuric chloride solution gives a good gray precipitate which collects most of the noble metals as it settles, but settling is very slow. Powdered zinc, iron, or lead does not react rapidly enough with dilute acid to produce a good mercuric chloride reduction with concomitant agitation of the solution. The use of magnesium powder plus hydrochloric acid as the reductant is decidedly preferable. Sulfuric acid may be substituted for hydrochloric acid.

Recovery of Colloidal Gold

To verify recovery of colloidal as well as ionic gold from solution by the mercury–mercurous chloride collector, nu-

Table II. Recovery of Gold from Colloidal State

Reagent to Produce Gold Colloid	Volume of Solution	Gold Added	Gold Recovered
	L.	*Mg.*	*Mg.*
Tannic acid	10	0.550	0.525
	10	0.630	0.600
	10	0.945	0.915
	2	0.62	0.62
	10	0.62	0.618
Stannous chloride	2	1.19	0.95
	2	0.60	0.53
	10	0.16	0.15
	10	0.16	0.147
Ferrous sulfate	10	0.25	0.23
	10	0.22	0.20
	10	3.86	3.67

merous runs were made on gold colloids of known gold content. Both organic and inorganic reducing agents were used to produce the gold colloids. When the colored gold colloid was diluted with much water to test recovery from very dilute solution, the colloidal color disappeared. The method is applicable to gold recovery from colloidal solution even though solutions may be much too dilute to give colloidal color (Table II).

Semicolloidal Mercury–Mercuric Amino Salt Collector

Good recovery of gold and of silver from dilute ionic or colloidal solution may be obtained by addition of ammonium hydroxide followed by some mercurous nitrate solution.

Table III. Recovery of Gold and Silver from Solution

(Using $HgNO_3$ with NH_4OH to form collector)

Volume of Solution	Gold Added	Silver Added	Gold Recovered	Silver Recovered
L.	*Mg.*	*Mg.*	*Mg.*	*Mg.*
10	1.40	32.37	1.30	25.4
40	0.40	20.90	0.38	16.25
10	12.95	....	12.80	...
10	1.025	....	0.98	...
10	0.31	....	0.285	...
10	2.00	25.1	1.90	24.7
10	0.45	18.9	0.43	16.7
10	1.15	32.9	1.07	32.3
10	0.57	8.9	0.51	7.8
10	1.63	21.8	1.49	19.8
40	33.45	133.0	30.93	115.5[a]
40	38.36	....	32.9	...[a]

[a] The total quantity of gold and silver in these runs was added in three separate additions, the residue being repeptized between additions to test ability of a mercurial residue containing 5 grams of mercury to become progressively enriched.

Mercury–mercuric amino nitrate precipitate forms as a black cloud, settles through the solution, replaces gold and silver from solution, and occludes in itself these noble metals. The residue may be obtained after decanting or siphoning most of the supernatant liquid, followed by filtration. This residue, after partial drying and with test lead added to it, may be assayed for noble metal content, by the cupellation process described for the mercury–mercurous chloride residue.

The mercury–mercuric amino salt collector recovers the noble metals from basic solution. Use of mercurous salt and ammonium hydroxide is cheaper and more convenient than the use of mercuric chloride, magnesium, and hydrochloric acid for formation of a given amount of collector. The precipitate formed is more gelatinous and can be readily suspended again after settling. This latter point is important, since recovery of gold and silver from several solutions may be additively occluded by use of one mercurial residue.

Proof of noble metal recovery from solution by use of this mercurial collector is evidenced by results recorded in Table III. In preparing the collector for recovery of the auric ion from 10 liters of water, 15 to 20 ml. of concentrated ammonium hydroxide and 30 ml. of a 10 per cent mercurous nitrate solution were used. This gave a convenient amount of residue which gave good gold recovery. The assay procedure used is accurate to about 0.01 mg. of gold and 1.0 mg. of silver.

Control Test for Silver-Ion Concentration in Water Sterilization

The use of silver in water sterilization is gaining in consideration and importance. Brandes (*1*) and Kirkpatrick (*2*) give the concentrations of silver ion used as between 0.05 and 0.6 mg. per liter or 50 and 600 mg. per 1000 liters or metric ton of sterilized water.

The experimental procedures developed have been proved to be accurate to about 1.0 mg. in recovering silver from 40 liters of dilute silver salt or colloidal silver solution, which is equivalent to 25 mg. per metric ton, the lower limit in the amount of silver ion suggested in the water sterilization. The method should be applicable, then, in control testing for silver-ion content in sterilized water. To verify this, varying amounts of silver ion, in the same concentration range used in water purification, were added to 40 liters of water in acid carboys. A semicolloidal mercurial collector fall was produced, as previously described, the residue from which was subjected to cupellation (Table IV). A high percentage of the silver added to the 40-liter carboys was recovered. The average silver loss in the listed runs was 0.64 mg., a goodly portion of which was due to absorption of silver by the cupels and volatilization during cupellation. This average loss is equivalent to but 0.016 mg. per liter, which is well under the lower limit of silver-ion concentration per liter used in water sterilization.

The last four runs recorded in Table IV are typical check runs for silver content on 40-liter samples from a pool of a million liters' capacity in which tests were made on bactericidal action of dilute solution of silver salts. Use was made of ammonium hydroxide and mercurous nitrate to form the collector. The applicability of the procedure to evaluate silver-ion concentration of solutions in the silver-ion concentration range used in water sterilization is proved.

Further Applications

These methods of determining gold and silver by recovery from solution may be applied in geochemical analysis of mine waters, in control assay of certain ore leach solutions, in estimating the gold content of sea water, and in a wet assay procedure for siliceous gold ore. The presence of cyanide in a solution containing gold and silver somewhat inhibits the recovery of these noble metals by the methods under consideration.

Table IV. Determination of Silver Concentration of Solutions in Concentration Range Used in Water Sterilization

Silver Ion Added	Silver Recovered		Equivalence of Original Solution
Mg.	*Mg.*	%	*Mg./l.*
4.70	3.95	84.0	0.1175
10.13	9.62	94.9	0.25325
13.28	12.83	96.6	0.3320
21.12	20.76	98.3	0.5280
26.43	25.95	98.18	0.6608
6.045	5.29	87.6	0.1511
12.83	11.91	92.8	0.3208
17.10	16.67	97.4	0.4276
28.82	27.82	96.9	0.7205
30.72	29.85	97.1	0.7680
38.59	37.66	96.0	0.9548
3.29	3.06	93.3	0.0823
Av. Ag loss per 40 liters	0.64		0.0160

The economic aspect of recovery of gold from dilute solution by a settling of a semicolloidal mercurial precipitate presents the problem of recovery of the mercurial reagents. When the residue is large, as from treatments of much gold-bearing solution, a retort with condenser can be used to recover mercury and its salts as well as the gold and silver. The use of a soluble mercurous salt plus ammonium hydroxide in producing the mercurial collector seems to have the best commercial possibilities. A few trial runs verify the ability to build up gold content in a mercury–mercurous amino salt residue of 2-gram mercury content by repeptizing the collector residue through several 40-liter samples of gold-bearing water.

Summary

Improved methods of determining and recovering gold and silver from dilute solutions are presented. As little as 0.01 mg. of gold or 1.0 mg. of silver is recoverable from solution in 40 liters of water, which is recovery of one part of gold in four billion and one part of silver in forty million parts of water.

Gold and silver are quantitatively recoverable from colloidal solution by the procedure outlined.

A procedure is applied to making control determinations of silver-ion concentrations as used in water sterilization. Gold content of sea water, mine water, and certain ore leach solutions may be estimated by methods described.

Literature Cited

(1) Brandes, C. H., Ind. Eng. Chem., 26, 962 (1934).
(2) Kirkpatrick, *Chem. & Met. Eng.*, 41, 373 (1934).
(3) Scheibler, C., *Ber.*, 2, 295 (1869).
(4) Yasuda, M., *J. Chem. Soc. Japan*, 2, 321 (1927).

Received July 6, 1937. Presented before the Division of Physical and Inorganic Chemistry at the 90th Meeting of the American Chemical Society, San Francisco, Calif., August 19 to 23, 1935.

A Noncorrodible Circulating Device

KENNETH A. FREEMAN AND P. J. THOMPSON

Naval Stores Research Laboratory, University of Florida, Gainesville, Fla.

During the progress of work in this laboratory a noncorrodible device that would circulate a liquid was needed.

The apparatus shown in Figure 1 meets the requirements. It is made of glass and operates as described here:

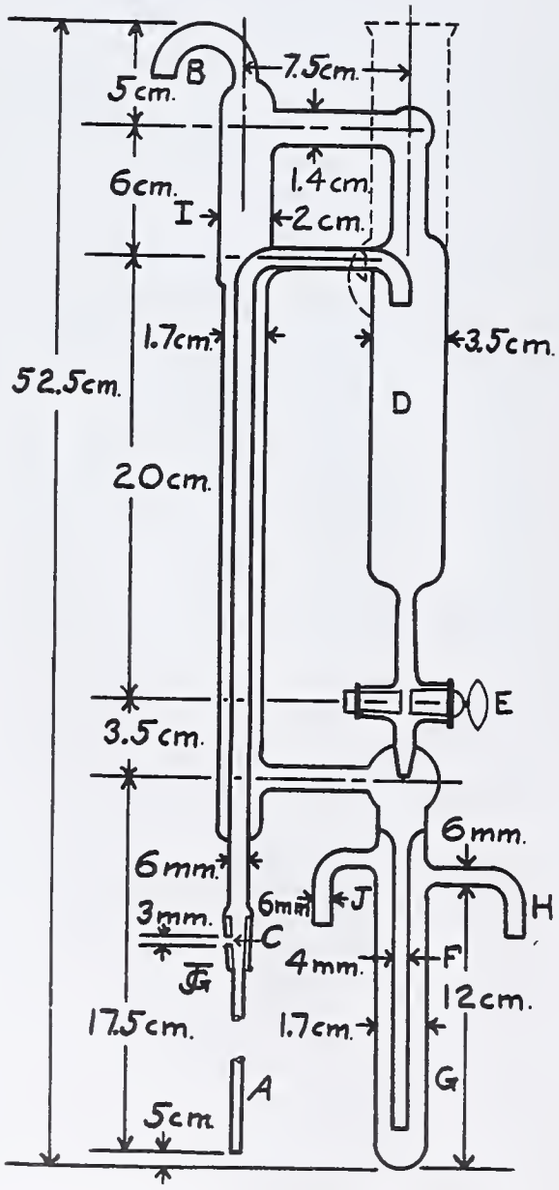

Figure 1. Diagram of Apparatus

The lower end of tube *A* is placed in the liquid to be circulated and the suction from an ordinary laboratory water aspirator is applied at *B*. The outlet tubes, *H* and *J*, are closed readily by placing the fingers over the ends or by stopcocks. Thus the apparatus is partially evacuated and the liquid rises in tube *A* until it reaches the air inlet, *C*, where the solid column of liquid is broken. The alternate bubbles of air and liquid empty into reservoir *D*. The liquid then passes down through stopcock *E* and tube *F* into well *G*. When the level rises above the lower end of *F*, *H* and *J* are opened. The liquid continues to rise in *G* and then flows out at *H*.

When reservoir *D* becomes full, the excess liquid flows out the top into the large tube, *I*, which in turn empties into *G*. This prevents the liquid from rising high enough to be drawn out of suction tube *B*. However, the suction must remain moderate, so that the rate of inflow will not exceed the combined rates of outflow. The rate of flow from *H* may be regulated either by the amount of suction applied or by stopcock *E*. When the suction is regulated so that the flow becomes steady, the lift requires no further adjustment.

A stopcock or piece of rubber tubing with a screw clamp, placed on delivery tube *H*, may be used to regulate the outflow. In this case it is necessary to provide overflow *J* in such a position that the liquid will return to the original container.

The air inlet *C* may be readily adjusted if the tubes at this point make a ground joint. It is entirely satisfactory to insert a T-tube at this point and regulate the air flow by means of an attached piece of rubber tubing and screw clamp.

The dimensions of the apparatus may be varied to meet any particular need.

The following limits of operation can be obtained with the apparatus of the dimensions in Figure 1:

The pressure difference at *B* may vary between 7 and 31 mm. The rate of delivery at *H* may be as high as 215 ml. of water per minute when the air inlet, *C*, is 1.5 mm. above the level of the liquid being raised. Water can be raised from a level 30 cm. below *C*. For raising liquids a greater distance, it is necessary to lower the position of *C*. Best results are obtained when *C* is close to the liquid surface.

The use of this apparatus with some modification of the well, *G*, as a sampling device for solutions or suspensions is suggested. By altering the shape and dimensions of *D* as indicated by the dotted lines, a filter medium can be inserted. This would make it possible to remove suspended material from the liquor.

The device has been used in this laboratory to circulate the electrolyte through an electrolytic cell. The height of the main reservoir gave sufficient head to keep a steady flow of liquid at all times, and the safety outlet permitted the setup to be left for hours at a time without attention.

Received August 9, 1937.

A Piezometer Ring

CHESTER P. BAKER AND ALBERT J. KOMICH
Chemical Engineering Laboratory, Northeastern University, Boston, Mass.

THE static pressure of a moving liquid in a pipe line ıay be measured by a manome- ›r attached to a small open- ıg in the pipe wall, the plane f the opening being parallel to ıe direction of flow. Such a onnection, however, may give ıulty readings owing to the isturbance of the flow by un- emoved burrs at the base of ıe drilled hole or by the pro- rusion of the tap beyond the ıner wall surface. The read- ıgs may not be simply a ıeasure of the static head, but ay include a fraction of the elocity head should the tream be diverted up the tap y a sharp downstream edge of he drilled hole.

To avoid these possible rrors and to ensure greater recision where small static ressure differences are concerned, the form of piezometer ring hown in Figure 1 was constructed in the authors' laboratory nd found to be very satisfactory.

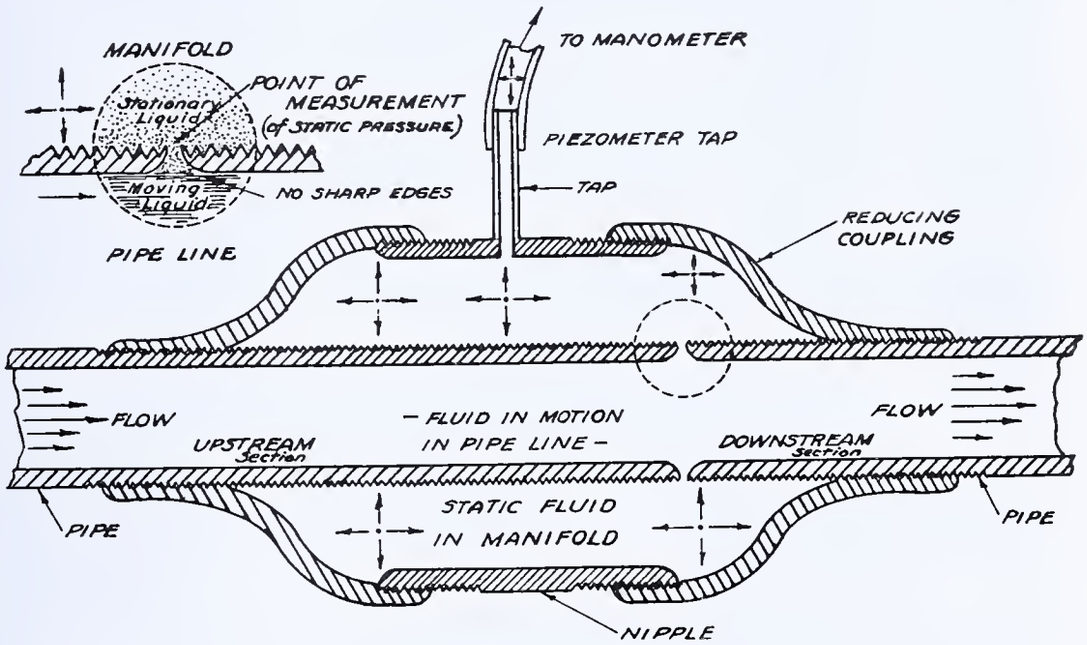

FIGURE 1. PIEZOMETER RING

The improvised piezometer consists of two reducing couplings, ne nipple, and a short piece of pipe threaded on one end for a ap. It is constructed as follows:

The upstream section of pipe is threaded to receive one of the educing couplings, into which is screwed a tapped nipple as hown in Figure 1. The downstream pipe is threaded and the econd coupling is put on. Now the two sections of pipe are oined by screwing the second coupling onto the remaining end f the nipple. The threaded lengths are gaged so that the pening between the upstream and downstream lengths of pipe s not more than 0.0625 inch. The split between the two sections is the most important part of the ring, as it is the point at which the pressure is measured. To avoid the effect of velocity head on the manometer, the tap in the nipple must be upstream from the static split. The inner edges of the split must be rounded to reduce the friction loss, to encourage flow through the pipe, and to prevent divergence of the flow into the manifold.

The improvised piezometer ring described is constructed from fittings which may be purchased from any dealer in pipe fitting supplies and can be put together with the minimum of shop equipment. It has been used successfully for the determination of the friction loss of pipes and pipe fittings.

RECEIVED August 26, 1937

Determination of Silicon in Aluminum—Correspondence

SIR: Churchill, Bridges, and Lee published in the May 15, 1937, number of INDUSTRIAL AND ENGINEERING CHEMISTRY (*4*) ı paper on the above subject containing a number of results vhich were obtained during an official examination by the A. S. T. M. of my methods published in the *Analyst* (*1*, *2*, *3*). Some published comments on these results seem to be necessary o clear up certain difficulties and misunderstandings which, as t appears from this paper from the Aluminum Company of America Laboratories, seem still to exist in America.

In my first paper (*1*), I pointed out that the tri-acid process recommended by the A. S. T. M. tended to give low results due to he loss of silicon as silicon hydride. In my second paper (*2*), I gave the actual results for the determination of silicon hydride ost from various classes of metal during solution in different acids and in soda. In my third paper (*3*), I gave full details of an accurate method for the determination of graphitic silicon n the residue from acid attack.

The main point brought out by my results was that with aluminum containing as principal impurities iron and silicon only, and in the chill cast condition—i. e., rapidly cooled—some of the silicon was in solid solution in the aluminum unless the iron content of the metal was abnormally high. When the metal was dissolved in mixed acids a part of this silicon in solid solution in the aluminum went off in the form of silicon hydride and was lost from the analysis.

To bring out this important error clearly it is advisable to take metal with high silicon (say 1.5 per cent) and low iron (say 0.10 per cent) and anneal it at about 570° C. for 24 hours and quench in cold water.

Also, since such metal has a tendency to aging and this is accelerated by any heating up during the turning or milling of the sample for analysis, special precautions must be taken to keep the metal cool and analyze it immediately after quenching.

Unfortunately in the A. S. T. M. investigation they did not appreciate these rather complicated metallurgical points and

carried out the comparison between the soda and tri-acid processes on what appears to have been, from the figures given in Churchill's paper, a series of copper-iron alloys (nominal composition stated to be 1 per cent iron, 1 per cent copper, etc., in each case). Further in Table I of that paper there is only one sample, 3S (for which actual figures of annealing are given), which might have any free silicon taken into solution by the annealing treatment; this sample is of such low silicon content (0.25 per cent), however, that if the metal contains 1 per cent of iron and copper, we cannot expect that there will be any free silicon left to dissolve in the aluminum. The sample 51SW, for which the temperature of annealing is not given, gives a result 10 per cent low by the tri-acid method. This is attributed by the authors to the magnesium present, though I cannot see any evidence for this assumption since no results for metal with similar annealing treatment W, but without magnesium, are given in the author's table.

The conclusion reached is that none of the samples of metal used for the A. S. T. M. comparison between the soda and tri-acid methods and published in the paper by Churchill, Bridges, and Lee are such as would be expected to show a pronounced difference in the silicon figure by these two methods. The samples chosen are in fact unsuitable for such a comparison where it is intended to bring out the differences in results obtained by the two methods.

In order to show that serious errors can be introduced, particularly in metallurgical investigations involving heat treatments, by the use of tri-acid method, I will give here a few of the most striking results from my papers. I believe I am justified in pointing out that probably as a result of the publication of my papers, there has been a big change since 1933 in the composition of the tri-acid mixture recommended by the A. S. T. M., by which the proportion of nitric acid has been increased three times compared with the other acids. This is undoubtedly a change in the right direction, but the mixture still requires testing out on metal heat-treated, as I have suggested, before it can be considered a satisfactory method for reference analysis.

Low Results by Tri-Acid Method for Silicon

Metal	Silicon: Tri-Acid %	Silicon: Soda %	Iron %
E	0.14	0.18	0.30
K	0.20	0.23	0.33
V	0.28	0.34	0.31
R	0.38	0.40	0.32
C.8	0.57	0.69	0.32
A	0.46	0.58	0.31
B	1.70	2.07	0.35

Other impurities, copper, manganese, etc., were less than 0.02 per cent in the above metal.

All samples were annealed at 550° C. for 24 hours and quenched in cold water. The samples were then immediately milled up for analysis, being kept cool, below 100° F., during the milling operation.

The tri-acid mixture used was as follows:

675 cc.	1.84 H_2SO_4	and	A. S. T. M. mixture Sept., 1933, schedule	1200 cc. 25% H_2SO_4 (by volume)
338 cc.	1.42 HNO_3			200 cc. 1.42 HNO_3
338 cc.	1.16 HCl			600 cc. 1.20 HCl
3150 cc.	water			

The results given in my table (*2*) show a mean loss for the tri-acid method as compared with the soda method of 18.6 per cent of the total silicon. It must be once more emphasized that losses of this order will be found only for metal which has been annealed at a high temperature, 550° to 570° C., so as to bring all the silicon into solid solution. The loss is due to the formation of silicon hydrides which go off during the solution of the metal in acid mixture.

In conclusion, it appears that this is a case where a thorough reëxamination of methods is needed. The A. S. T. M. represents perhaps the highest standard of scientific testing in the world and the maintenance of this standard depends on a willingness to examine and if necessary, as in this case, to reëxamine evidence relating to errors or faults in the standard methods.

Literature Cited

(1) Callendar, L. H., *Analyst*, 57, 500 (1932).
(2) *Ibid.*, 58, 81 (1933).
(3) *Ibid.*, p. 580.
(4) Churchill, H. V., Bridges, R. W., and Lee, M. F., Ind. Eng. Chem., Anal. Ed., 9, 201 (1937).

L. H. Callendar

The Chloride Electrical Storage Company Limited
Research Laboratories, Exide Works
Clifton Junction, near Manchester, England

August 5, 1937

• • • • •

Sir: We have read with interest Dr. Callendar's comment on our recent paper on the determination of silicon. The work reported in our paper was done on samples representative of the metal and alloys ordinarily encountered here in commerce and industry. The temperatures we used for annealing were incorrectly stated in two instances as 300° and 500° F., whereas they actually were 300° and 500° C. These temperatures were selected because they represent the range of temperatures that are generally used in the aluminum industry in this country. We did not use the higher temperature specified by Dr. Callendar because analytical chemists rarely encounter metal which is quenched from as high a temperature as 550° C., and which they immediately analyze lest aging occur.

Following Dr. Callendar's suggestions, additional analyses were made, the main details of which are summarized below:

Sample	Thermal History	Method of Decomposition	Si %	Fe %
A	Heated 24 hours at 570° C. and quenched	Tri-acid	0.93	0.06
		NaOH	1.01	
A	Heated 24 hours at 300° C. and quenched	Tri-acid	1.02	..
B	Heated 24 hours at 555° C. and quenched	Tri-acid	1.51	0.15
		NaOH	1.65	
B	Heated 24 hours at 300° C. and quenched	Tri-acid	1.64	..
C	Heated 24 hours at 555° C. and quenched	Tri-acid	5.05	0.64
		NaOH	5.19	
C	Heated 24 hours at 300° C. and quenched	Tri-acid	5.19	..

The above data confirm Dr. Callendar's position that the tri-acid method, when applied to some aluminum alloys which have been heated at 550° C. and above, quenched therefrom, and immediately analyzed, may yield low results. This is extremely interesting, since the data in our paper show no such effect when metal has been heated at 500° C. instead of the higher temperature specified by Dr. Callendar.

It now becomes apparent that our limitation of the inapplicability of the tri-acid method to aluminum alloys containing magnesium silicide should be broadened to include aluminum alloys which have been heated and quenched from a temperature of about 550° C. This broadening of the scope of inapplicability makes doubtful the use of the tri-acid method as a fundamental umpire method for use on aluminum samples of unknown thermal history. As a practical control and inspection method for commercial aluminum and aluminum alloys, the tri-acid method will yield satisfactory results, since ordinarily the thermal exposure of such metal does not go above 500° C. We stated in our paper that the sodium hydroxide method is applicable to all types of aluminum alloys. We now concur with Dr. Callendar's suggestion that the basic umpire method for the analysis of aluminum alloys should embrace the sodium hydroxide method of decomposition.

H. V. Churchill, R. W. Bridges, and M. F. Lee

Aluminum Company of America
New Kensington, Pa.

October 7, 1937

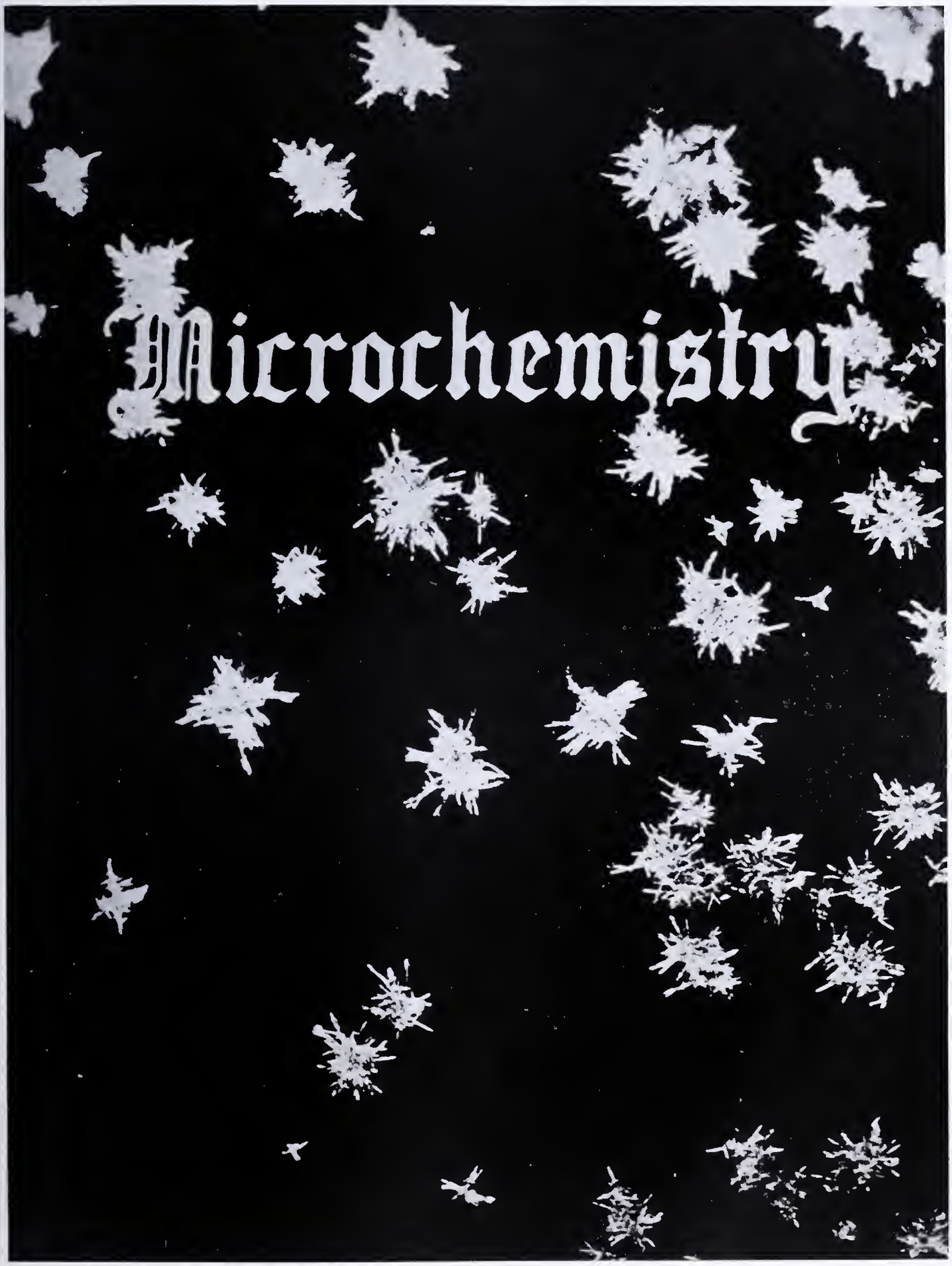

Courtesy, Leo K. Yanowski

Flavo Cobaltic Silicotungstate Crystals

Direct Microdetermination of Oxygen in Organic Substances by Hydrogenation

Analysis of Pure, Volatile Compounds Containing Carbon, Hydrogen, and Relatively Low Percentages of Oxygen

W. R. KIRNER, Coal Research Laboratory, Carnegie Institute of Technology, Pittsburgh, Pa.

A micromethod, based on ter Meulen's hydrogenation procedure, has been developed for the direct determination of oxygen in volatile organic compounds containing only carbon, hydrogen, and oxygen. A study was also made of the blank determination involved in this method. It was found that, in the analysis of pure compounds which distill or sublime, results can be obtained which agree with theory to within ±0.1 per cent, provided a more or less empirical blank value is deducted. If the manipulative blank value is deducted the results all tend to be low, which indicates that a hidden compensative error is involved in the method. The same technic when applied to sucrose, which leaves a voluminous deposit of carbon in the boat, has so far yielded results which are consistently low.

THE purpose of this paper is to describe a micromethod for the direct determination of oxygen in organic substances based on ter Meulen's hydrogenation process. The principle of this method consists in distilling, subliming, or pyrolyzing the sample in a current of hydrogen and passing the products over a cracking catalyst, heated to about 1000° C. The products thence pass, along with the hydrogen, over a methanation catalyst, maintained at 350° C., where hydrogenation occurs and the oxygen present in the sample is converted to water which is collected in an absorption tube and weighed.

Previous papers from this laboratory (*4*) have described the development of an oxidation method for the direct, simultaneous microdetermination of carbon, hydrogen, and oxygen in organic substances. This oxidation method is based on the determination of the oxygen content of the combustion products (carbon dioxide, water, sulfur trioxide, and nitrogen peroxide), together with the gaseous "oxygen consumed" during the combustion. The relative advantages and disadvantages of the hydrogenation versus the oxidation method have been previously pointed out (*5*). When work was started on the oxidation method, the hydrogenation method, in its state of development at that time, did not look promising as the basis for a general microprocedure because the presence of elements such as halogens, nitrogen, and sulfur complicated the apparatus and the procedure, and the determination of the oxygen content of the samples was not particularly direct. In the interim, however, there have been some noteworthy improvements made in this method, particularly by Russell and co-workers (*12*), as well as by ter Meulen (*8*) and Goodloe and Frazer (*1*), which have greatly simplified the method. These improvements mainly concern the use of improved methanation and cracking catalysts and also more suitable absorption agents for the water formed by the hydrogenation of the oxygen in the sample. In its improved state the method appeared sufficiently attractive to warrant an attempt to convert it into a micromethod. Indeed, during the course of the present investigation, a paper appeared by Hennig (*2*) describing a similar hydrogenation method for the direct microdetermination of oxygen in pure compounds containing carbon, hydrogen, and oxygen with a maximum error of ±0.4 per cent. More than a year after the present work had been finished a paper appeared by Lindner and Wirth (*7*) completely describing a volumetric microdetermination of oxygen in organic compounds (containing, besides carbon, hydrogen, and oxygen, also nitrogen, sulfur, and halogens), which is likewise based on the ter Meulen hydrogenation process. A preliminary notice concerning the development of a micromethod, apparently similar to the one described here, was also recently published by Unterzaucher and Bürger (*13*).

Apparatus

The apparatus is illustrated in Figure 1. Electrolytic hydrogen, taken from a high-pressure cylinder, was transferred to a large gasometer and stored over distilled water. The hydrogen passed from the gasometer through a Pregl precision screw clamp, *A*, to a Pregl pressure regulator, *B;* the gas emerged under a pressure corresponding to about a 10-cm. column of water. From here the gas passed through a large glass-stoppered U-tube, *C*, containing first an equal mixture of soda lime and Ascarite (8- to 20-mesh); Ascarite alone was found unsatisfactory as it soon became sufficiently wet to clog the U-tube and prevent passage of the hydrogen. The remainder of the U-tube was filled with Drierite (10- to 20-mesh anhydrous calcium sulfate, kindly furnished by the manufacturer, W. A. Hammond, Yellow Springs, Ohio, to whom the author wishes to express his thanks. The plain material was used which contained no indicator). The gas then entered a preheater, *D*, which contained platinized asbestos heated to about 400° C. by means of an electrical heater. The gas was cooled by passage through the immersed glass spiral, entered the bubble counter, *E*, containing 50 per cent potassium hydroxide solution, and then passed into the small U-tube, filled just like the large one, and through the three-way stopcock and into the side arm of the hydrogenation tube. All rubber connections in the purifying train were made with paraffin-impregnated tubing. After passing through the hydrogenation tube, the gas entered a Pregl microabsorption tube filled with Drierite, thence into a protection tube, similarly filled, and then into the Mariotte bottle.

The quartz hydrogenation tube was 65 cm. long and had an internal diameter of 8 mm. and 1-mm. wall. To the exit end was sealed a 1-mm. capillary, 3 cm. long. The portion of the hydrogenation tube adjacent to the exit capillary, and with only the capillary protruding, was heated with a small electrical Nichrome-wound furnace (catalyst furnace) 18 cm. long and 7.5 cm. in diameter. Directly against this was a second, similarly constructed high-temperature furnace (cracking furnace) 18 cm. long and 12 cm. in diameter. The catalyst furnace surrounded the portion of the hydrogenation tube which contained the methanation catalyst, while the cracking furnace heated that part of the tube which contained the cracking catalyst. The furnaces were calibrated throughout their entire length using a chromel-alumel thermocouple and the temperatures related to readings

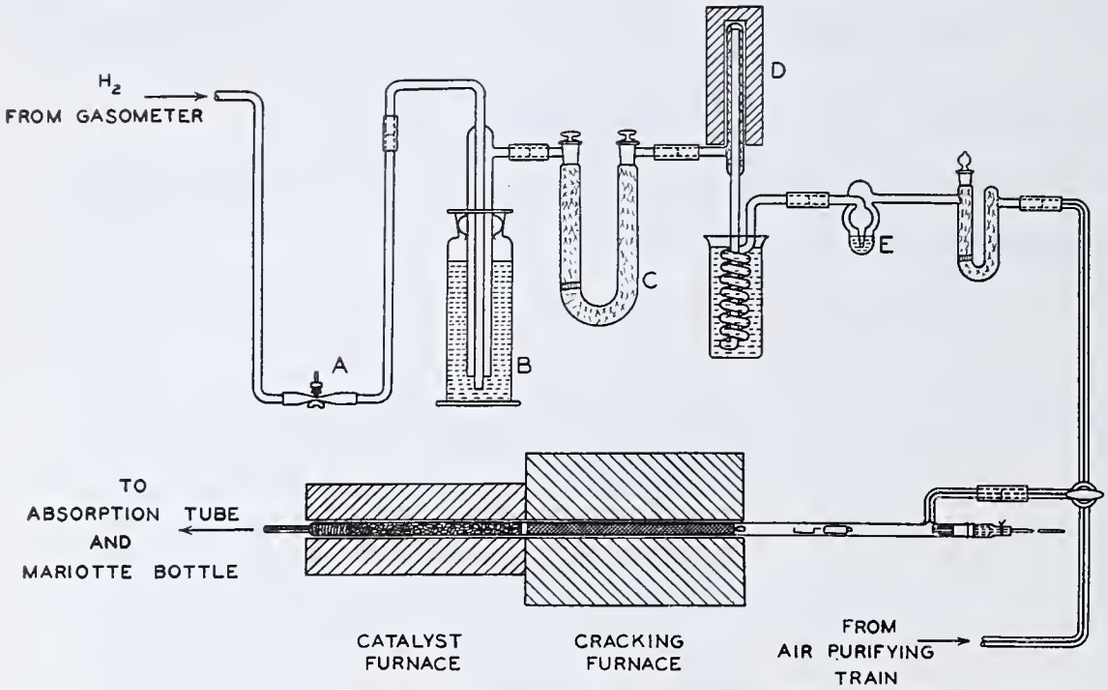

FIGURE 1. DIAGRAM OF APPARATUS

made on a pair of ammeters. By means of slide-wire resistances the furnaces could be adjusted to any desired temperature. The samples were weighed into platinum microboats and were heated by means of a Bunsen burner and wire gauze roll just as in a Pregl carbon-hydrogen determination.

The Hydrogenation Tube Filling

The clean, dry hydrogenation tube was fitted with an asbestos resistance plug, about 2 mm. long, which was placed in the capillary outlet just adjacent to where the latter was sealed to the hydrogenation tube proper. The density of this plug was adjusted so that, with hydrogen flowing through the heated hydrogenation tube under a pressure of 10 cm. of water, the gas flow rate was about 5 cc. per minute as measured with the Mariotte bottle. In adjusting the density of this plug all air must be absent from the tube, since the viscosity of air is considerably higher than that of hydrogen. A 3-cm. layer of compressed nickel wire (No. 35 B & S gage) was then pushed into the tube, followed by three tight-fitting pieces of circular nickel gauze, cut from 200-mesh nickel gauze, which prevent the finely divided catalyst from getting into the end of the hydrogenation tube.

A 14-cm. layer of 2 per cent thoria–nickel oxide was next added, which was prepared according to the directions of Russell and Fulton (*12*). Their statement was confirmed to the effect that, using this catalyst, the oxygen present in the sample is found only as water. In several experiments an Ascarite–soda lime tube was connected with the Drierite tube, but its increase in weight never exceeded that found in a blank determination. To reduce the amount of catalyst in the tube and to permit easy gas flow, the oxides were mixed with 2- to 3-mm. lengths of 1-mm. glass rod. The 14-cm. layer contained about 2.5 grams of the mixed oxides which yielded about 2.0 grams of active thoria-promoted nickel after reduction. A single piece of circular 200-mesh nickel gauze held the loosely packed catalyst in place. This entire portion of the tube filling occupied 17 cm. and was surrounded by the catalyst furnace. The next portion of the tube filling consisted of the cracking catalyst (*6, 9, 10*) which was merely a roll of 200-mesh nickel gauze, 17 cm. long. This was made to fit into the tube rather loosely and was held in cylindrical form by means of fine nickel wire ties spaced at about 4-cm. intervals; it also had a nickel wire loop at one end to permit easy removal from the tube. This nickel wire roll filled the portion of the tube which was heated by the cracking furnace. After the nickel gauze roll was prepared it was oxidized in a Bunsen flame and then reduced in a hard-glass combustion tube, heated to dull redness, with hydrogen passing through it, and allowed to cool in the stream of hydrogen. The compressed nickel wire and the circular nickel gauze pieces were treated similarly.

Microabsorption Tube Filling

The single absorption tube was filled with 10- to 20-mesh Drierite in the usual way, the absorption agent being held in place with small cotton tampons at each end of the tube. Preliminary wiping, aeration, and weighing experiments made with this tube showed satisfactory constancy and reproducibility of weight (±0.003 mg.).

Procedure

CONDITIONING THE HYDROGENATION- AND ABSORPTION-TUBE FILLINGS. The mixture of thoria–nickel oxide was reduced, *in situ*, by passing hydrogen through the filled hydrogenation tube continuously for several days, the temperature of the catalyst furnace being maintained at 400° C. During the last day of the reduction the nickel gauze roll was also heated to about 1000° C. by connecting the cracking furnace, and the absorption tube and Mariotte bottle were attached so as to condition the absorption tube filling.

ACTUAL DETERMINATIONS. After at least 72 hours' continuous reduction of the mixed oxides at 400° C., manipulative blank determinations (described below), made with the catalyst heated at 350° C., yield constant and reproducible values which show no further tendency to diminish appreciably. The apparatus is then ready for use in the actual determinations.

Hydrogen is started through the apparatus from the gasometer. The two electric furnaces and the preheater are turned on, the catalyst furnace being set at 350° C. and the cracking furnace at 1000° C. After one hour they attain the required temperatures and the absorption tube is attached to the hydrogenation tube, by means of the usual heavy-walled paraffin-impregnated rubber tube, and connected with the protection tube and Mariotte bottle, and hydrogen is passed for 30 minutes at the rate of 5 cc. per minute. At the end of this interval the absorption tube is removed, taken to the balance room, and placed in an aeration apparatus, similar to that devised by Niederl (*11*) but containing Drierite as the drying agent, and 50 cc. of air are drawn through it at the rate of about 10 cc. per minute to displace the hydrogen. Then the absorption tube is removed from the aeration apparatus, wiped, stoppered with tight-fitting pins, allowed to stand next to the balance for 10 minutes, placed in the balance and weighed at the end of an additional 10 minutes.

Just after the start of the 5-minute aeration period the weighed sample is introduced into the hydrogenation tube and placed near the end of the tube just beyond the side arm connection, so that it is not heated by radiation from the cracking furnace. During the insertion of the sample the gas flow through the pressure regulator and purifying train is speeded up considerably, by opening the precision screw clamp, so that a rapid stream of hydrogen issues from the open hydrogenation tube and thus inhibits the entrance of air. Immediately behind the boat containing the weighed sample is placed a small quartz plug, provided with a loop so that it can be easily pulled out of the hydrogenation tube. This plug fits the hydrogenation tube fairly snugly but should be capable of being pushed forward and backward without resistance. The purpose of the plug is to increase the velocity of the hydrogen behind the sample and thus hinder any backing up of the sample. When the quartz plug was not used it was found that even with gas velocities of 5 cc. per minute there was a tendency for some compounds to distill backward through the Bunsen flame, countercurrent to the hydrogen stream. The passage of hydrogen is continued during the remainder of the aeration, wiping, waiting, and weighing periods, a total of about 30 minutes. In the event that any air was admitted to the hydrogenation tube during insertion of the sample, it, together with the air present in the sample and in the boat, would be removed

and swept out of the hydrogenation tube before the absorption tube is reattached.

In all the published procedures (except that of Hennig, *2*), the weighed sample is introduced into the hydrogenation tube while a rapid stream of hydrogen issues from the open tube and after the absorption tubes have been attached. The assumption is made that no air enters the hydrogenation tube during this procedure. However, any oxygen which enters the tube during this operation will be converted to water, so that there is an excellent opportunity here for the appearance of a compensative error. While such errors may be negligible in macro- or semimicroprocedures, they can assume considerable magnitude in a micromethod. One can readily calculate that the volume of air present in a microboat contains approximately 0.1 mg. of oxygen which would form 0.11 mg. of water on hydrogenation. This was confirmed experimentally. In preliminary attempts to adopt the macrotechnic of inserting the sample into the open hydrogenation tube, after the absorption tube had been attached and with an exit flow of hydrogen of 185 cc. per minute, the blank values were in excess of 0.1 mg. It is also difficult accurately to standardize such a procedure with the hydrogenation tube being opened for a minimum period of time. It is therefore imperative, in a micromethod, to conduct a sweeping operation to remove any air which inadvertently entered the hydrogenation tube as well as that present in the boat and adsorbed on the sample, before attaching the absorption tube. Hennig (*2*) also found it advisable to adopt such a procedure in his micromethod.

After the absorption tube has been weighed it is attached to the hydrogenation tube and connected with the Mariotte bottle. Before starting the flow of water from the Mariotte bottle, the sample and quartz plug are pushed forward in the hydrogenation tube to a distance of 3 to 4 cm. from the cracking furnace. This is done, without permitting air to enter the hydrogenation tube, as follows:

The rubber stopper in the end of the hydrogenation tube (Figure 1) is provided with a tight-fitting glass tube about 5 cm. long which acts as a sleeve. Through this is inserted a snug-fitting glass rod of sufficient length to permit the boat and quartz plug to be pushed forward nearly as far as the cracking furnace. A tight-fitting, impregnated rubber tube, about 5 cm. long, fits over the glass sleeve and also fits snugly over the glass rod; to make a gas-tight connection the rubber tubing is wired around the glass rod with fine copper wire. When the sample and quartz plug are to be pushed forward, this wire is removed; a small amount of hydrogen issues from the annular space between the glass rod and the rubber tube but there is little likelihood of any air or moisture entering the hydrogenation tube, except that adsorbed on the glass rod, since the hydrogen is issuing under pressure. The sample and quartz plug are pushed forward the desired distance and the glass rod is pulled back to its original position and the rubber tube rewired around it. The Mariotte bottle is then started, the gas flow adjusted to 5 cc. per minute, and the remainder of the procedure is carried out exactly like a Pregl carbon-hydrogen determination except that it is done more slowly and carefully.

The first passage of the Bunsen burner usually requires 40 to 50 minutes and the second 5 to 10 minutes. The hydrogen continues to pass so as to sweep the products through the hydrogenation tube and into the absorption tube. During this sweeping period the next sample is weighed out. When 400 cc. of water have been collected from the Mariotte bottle, which requires 75 to 80 minutes, the absorption tube is removed and brought to the balance room, aerated, wiped, and weighed as before. After the start of the aeration period the boat and quartz plug are removed from the hydrogenation tube and the new sample and quartz plug are introduced in preparation for the next analysis.

Blank Determinations. To determine whether or not the catalyst has been sufficiently reduced, it is necessary to make a series of blank determinations. It is also necessary to make blank experiments in order to determine the weight of water which must be deducted from the final weight of water obtained in an actual determination, since water is continuously being formed by reduction of nickel oxide present in the catalyst as well as from any oxygen (and moisture) in the air inadvertently admitted to the hydrogenation tube during the introduction of the sample. For all blank and actual determinations the methanation catalyst was maintained at 350° C.

In the present investigation the manipulative blank determinations were made exactly simulating an actual determination—that is, the hydrogenation tube was opened, the quartz plug and boat from the previous combustion were removed, and the quartz plug and an empty boat were inserted. The hydrogenation tube was then stoppered and swept with hydrogen for the same length of time as in an actual determination, the weighed absorption tube was attached, the quartz plug and boat were pushed forward, and the same volume of hydrogen was passed through the heated hydrogenation tube as in an actual determination; then the absorption tube was removed and weighed. The gain in weight of the absorption tube represents the manipulative blank value.

All previous investigators have determined a so-called "blank value" by passing hydrogen, at a more or less definite rate of flow, through the heated hydrogenation tube for a given length of time, usually 0.5 hour. The increase in weight of the absorption tube during this period is considered the blank value; if an actual determination required 1.5 hours, then three times the blank value was deducted from the weight of water absorbed during the analysis.

ter Meulen (*9*) claims to have eliminated the blank value entirely by using a very small amount (0.1 gram) of 10 per cent thoria-nickel catalyst. The use of this small amount of catalyst has the disadvantage of necessitating its frequent renewal. Hennig (*2*), in his micromethod, using a nickel-pumice catalyst, pointed out that the blank value obtained by passing hydrogen over the catalyst at the rate of 3 to 5 cc. per minute for 0.5 hour should not exceed 0.010 to 0.015 mg. of water. No blank correction was applied to his results, which explains why three out of the four analyses he cites are from 0.15 to 0.39 per cent high.

Table I. Blank Determinations

Month (1936)	Technic	Hydrogen *Cc.*	Time *Min.*	Blank Values *Mg. H_2O*
February	*a*	300	71	0.020
		300	71	0.013
				Mean 0.016
February	*b*	300	72	0.036
		300	74	0.034
		300	71	0.036
		300	68	0.049
		300	70	0.044
		300	70	0.051
				Mean 0.042
February	*c*	400	75	0.062
March	*a*	400	75	0.024
March	*b*	400	82	0.050
March	*c*	400	81	0.042
		400	80	0.035
				Mean 0.038
May	*c*	400	80	0.054
August	*c*	400	80	0.085
		400	80	0.080
		400	80	0.079
				Mean 0.081

Note: *a*, Hydrogen passed through unopened tube; no heating with movable burner; *b*, manipulative blank determination except no heating with movable burner; *c*, complete manipulative blank determination, including heating with movable burner.

In order to get some information on this question of blank values, a considerable number of blank determinations were made during the course of the work. It was felt that previous investigators had not devoted sufficient study to the determination of blank values and that blank values, as applied up to this time, might easily compensate for errors made in the actual determinations. Three different technics were used in these determinations, so that a comparison could be made of the results, which are indicated in Table I.

Scrutiny of Table I reveals the fact that the increase in weight of the absorption tube, following a complete manipulative blank determination (technic *c*) is 2 to 3 times that obtained using the technic of previous investigators (technic *a*), where the same volume of hydrogen is merely passed through the heated hydrogenation tube, which is not opened (for the removal of the boat left from the previous analysis, and for the introduction of the boat for the next analysis), nor subjected to heating as in an actual determination. With the very unfavorable factor $\left(\frac{O_2}{2\ H_2O} = 0.888\right)$ involved in this determination, a difference in blank values of this magnitude causes an appreciable difference in the final calculated result.

It was found that if the manipulative blank values were deducted from the weight of water obtained in actual determinations, the final results were always too low. However, if the blank value obtained using technic *a* was deducted, the results were satisfactory. It would therefore appear that a compensative error of some sort is involved in this method and that the "blank value," as determined by other investigators using macro- or semimicroprocedures, fortuitously yielded correct results due to a compensation of errors. In other words, the blank value which must be applied in order to get satisfactory results is a more or less empirical correction factor. This conclusion agrees with the findings of Lindner and Wirth (*7*). The blank value which they apply to their results is also of a more or less empirical nature. Calculated to the same total volume of hydrogen that was used in the present work (350 or 400 cc.), the magnitude of their blank value is practically identical to that used here (see Table II).

The results shown in Table I also indicate that the magnitude of the blank is directly proportional to the volume of hydrogen passed through the hydrogenation tube. If the hydrogenation tube is opened for the introduction of the boat, the blank value is increased by a factor of 2 to 3. Heating the front end of the hydrogenation tube with a movable burner during the blank determination (technic *c*) causes no appreciable increase over that obtained when the hydrogenation tube is not so heated (technic *b*), all other conditions being identical. In the procedures involving an opening of the hydrogenation tube a marked difference is observed in the blank values as determined at different times of the year; this is presumably a function of the humidity of the atmosphere, since the blank values are highest during the humid summer months.

Results

The results obtained on six pure compounds, with oxygen contents ranging from 4 to 26 per cent, are given in Table II. Generally, in selecting the size of the sample to be analyzed, the larger the oxygen content the smaller the weight of sample taken. It is observed that the mean accuracy of this method is about ±0.10 per cent.

Cholesterol was chosen as one of the test substances because ter Meulen (*9*) reported that it sometimes causes difficulty due to the production of a solid hydrocarbon, formed during passage of the sample over the incandescent asbestos which was used as the cracking agent. This hydrocarbon resists decomposition even at elevated temperatures and, on entering the absorption tube, increases its weight and causes high results. The sample used here was obtained from Merck and dried in vacuum over phosphorus pentoxide for several days. The results obtained confirm ter Meulen's statement to the effect that a nickel cracking catalyst performs satisfactorily in this respect.

Table II. Results of Analyses

Substance	Weight of Sample	Weight of Water	Oxygen Found	Oxygen Difference from theory
	Mg.	*Mg.*	%	%
Benzoic acid (26.22% O)	4.575	1.373[a]	26.27	+0.05
	5.094	1.521[a]	26.17	−0.05
	4.785	1.431[a]	26.19	−0.03
	5.141	1.533[a]	26.14	−0.08
	4.696	1.404[a]	26.17	−0.05
Anthraquinone (15.38% O)	6.457	1.140[b]	15.34	−0.04
	8.300	1.448[b]	15.23	−0.15
	6.371	1.145[b]	15.61	+0.23
Methyl-β-naphthyl ether (10.12% O)	8.217	0.956[b]	10.06	−0.06
	7.394	0.877[b]	10.23	+0.11
	9.076	1.047[b]	10.00	−0.12
p-Cyclohexyl phenol (9.08% O)	8.160	0.870[b]	9.20	+0.12
	7.868	0.824[b]	9.02	−0.06
	7.805	0.826[b]	9.10	+0.02
Benzalacetophenone (7.69% O)	8.309	0.769[b]	7.95	+0.26
	8.483	0.757[b]	7.66	−0.03
	8.848	0.802[b]	7.80	+0.11
Cholesterol (4.14% O)	9.777	0.493[b]	4.25	+0.11
	9.116	0.465[b]	4.29	+0.15

[a] Deduct blank of 0.020 mg. of water for 350 cc. of hydrogen passed.
[b] Deduct blank of 0.025 mg. of water for 400 cc. of hydrogen passed.

It was found that after making the above analyses and then removing the nickel gauze roll, a thin deposit of carbon was present on the nickel which covered but about 1 cm. of its length. All the above compounds readily volatilize out of the boat and leave only traces of carbon on the interior of the hydrogenation tube so that practically all the carbon, not converted into methane, is present on the nickel gauze roll.

Attempts to Analyze Sucrose

Applying the technic developed on the compounds listed in Table II to a pure sample of sucrose gave results which were consistently low by 0.5 to 1.0 per cent. In a majority of cases the results were low even before deducting a blank. ter Meulen (*10*) and Inaba and Abe (*8*) mention no difficulties encountered in the analysis of sucrose, while Russell and Fulton (*12*) state that strong heating of the carbonaceous residue, left after carbonization of the sucrose, is necessary; they applied the full flame of a blow torch to the bare quartz hydrogenation tube. Each of the above authors has reported only a single analysis on sucrose. Goodloe and Frazer (*1*) also obtained low results in the analysis of sucrose; they ascribed their failure to obtain satisfactory results to an inactive catalyst. It may also be significant that the results reported for sucrose by Lindner and Wirth (*7*) and Unterzaucher and Bürger (*13*) are all low (−0.33, −0.11, and −0.26 per cent).

Following the suggestion of Russell and Fulton, a variety of methods for strongly heating the carbonaceous residue, left after pyrolysis of sucrose, were tried. These included strong heating of the bare quartz hydrogenation tube with a Bunsen burner, a blast lamp, an oxygen blast lamp, a pair of oxygen blast cross fires, and finally an electric split-type furnace which maintained the tube around the boat at 1100° C. All these attempts failed to improve the results and all, except the last method, soon seriously damaged the quartz

tube. If oxygen is retained in the residual carbon it does not appear to yield to these increasingly strenuous heat treatments. The carbonaceous residue is undoubtedly active, so that it did not seem feasible to remove it from the hydrogenation tube in order to make a carbon analysis, since it would probably rapidly adsorb both oxygen and moisture from the atmosphere.

In the analysis of a substance such as sucrose, which has a high oxygen content and which readily loses water on heating, it was thought that perhaps carbon monoxide or dioxide was lost by the reversal of the following equilibria caused by the sudden appearance of considerable amounts of water:

$$CO + 3H_2 \rightleftharpoons CH_4 + H_2O$$
$$CO_2 + 4H_2 \rightleftharpoons CH_4 + 2H_2O$$

It was experimentally proved that this was not the case, at least for the carbon dioxide reaction. In several analyses an Ascarite–soda lime tube, placed after the Drierite tube, showed no increase in weight over that of a blank determination, so that no carbon dioxide escaped. To get experimental evidence concerning the reversal of the carbon monoxide reaction it would be necessary to determine very small amounts of carbon monoxide in the presence of large quantities of hydrogen, which is difficult. It also did not appear likely that carbon monoxide would escape reduction, since the literature indicates that carbon monoxide is converted to methane, under conditions similar to those used here, more easily than is carbon dioxide. Hence, if carbon dioxide does not escape reaction it is not likely that carbon monoxide would escape. An increase in the rate of hydrogen flow to 10 cc. per minute, using a total of 800 cc., also failed to improve the results. The investigation of sucrose, and other substances which behave similarly on pyrolysis in hydrogen, is being continued and will be reported later.

After a number of sucrose samples have been analyzed, the deposit of carbon in the hydrogenation tube, which renders visibility difficult, is removed as follows:

The glass plug and boat and also the nickel gauze roll are removed. If the nickel gauze contains a deposit of carbon it is burned off in a strong Bunsen flame. The whole gauze is oxidized by heating in a Bunsen flame and then reduced in a stream of hydrogen by heating to dull redness in a hard-glass combustion tube. The hydrogen in the quartz hydrogenation tube containing the carbon deposit is then displaced by nitrogen. The nitrogen (water-pumped) is taken from a high-pressure cylinder and passed through a Pregl pressure regulator, a bubble-counter U-tube, filled like the one in the hydrogen purifying train, and then is passed into the end of the hydrogenation tube, the connection being made with a rubber stopper. During this procedure the hydrogen is completely shut off at the three-way stopcock and the catalyst furnace is at room temperature while the cracking furnace is heated. When the hydrogen is all displaced by nitrogen, air is admitted from the gasometer and passed into the hydrogenation tube through the three-way stopcock after emerging from the air purifying train, which is identical to that used for the hydrogen except that no preheater is used. By heating the portion of the tube containing the carbon deposit with a Bunsen burner and wire gauze the carbon is readily removed. The cracking furnace is then allowed to cool, hydrogen is passed to displace the air, the nickel gauze roll is reinserted, and then both furnaces are reheated, the methanation catalyst being heated to 400° C. during the reduction of any nickel oxide which might have formed during the burning-out process. After reduction overnight, or longer, the temperature of the catalyst furnace is reduced to 350° C., and if the blank determination is satisfactory the apparatus is ready for use.

Acknowledgments

The author wishes to express his appreciation to B. B. Scott for designing the electrical furnaces used in this investigation and to J. A. Thompson for their construction.

Literature Cited

(1) Goodloe, P., and Frazer, J. C. W., Ind. Eng. Chem., Anal. Ed., 9, 223–5 (1937).
(2) Hennig, H., *Chem. Fabrik*, 9, 239–41 (1936).
(3) Inaba, T., and Abe, Y., *J. Soc. Chem. Ind., Japan*, 39, 91B (1936).
(4) Kirner, W. R., Ind. Eng. Chem., Anal. Ed., 6, 358–63 (1934) 7, 363–5 (1935); 7, 366–8 (1935); 8, 57–61 (1936).
(5) *Ibid.*, 6, 358–63 (1934); 8, 57–61 (1936).
(6) Lacourt, A., *Bull. soc. chim. Belg.*, 43, 73–92 (1934).
(7) Lindner, J., and Wirth, W., *Ber.*, 70, 1025–38 (1937).
(8) Meulen, H. ter, *Rec. trav. chim.*, 53, 118–25 (1934); *Bull. soc. chim.*, (5) 2, 1692–4 (1935).
(9) Meulen, H. ter, *Rec. trav. chim.*, 53, 118–25 (1934).
(10) *Ibid.*, 41, 509–14 (1922); *Bull. soc. chim.*,(5) 2, 1692–4 (1935).
(11) Niederl, J. B., and Whitman, B., *Mikrochemie*, 11, 287, 295–6 (1932); Niederl, J. B., and Roth, R. T., Ind. Eng. Chem., Anal. Ed., 6, 272 (1934).
(12) Russell, W. W., and Fulton, J. W., *Ibid.*, 5, 384–6 (1933); Russell, W. W., and Marks, M. E., *Ibid.*, 6, 381–2 (1934); 8, 453–5 (1936); Marks, M. E., *Ibid.*, 7, 102–3 (1935).
(13) Unterzaucher, J., and Bürger, K., *Ber.*, 70, 1392 (1937).

Received August 30, 1937. Presented before the Microchemical Section at the 91st Meeting of the American Chemical Society, Kansas City, Mo., April 13 to 17, 1936.

The Determination of Acetyl, Especially in O-Acetyl Compounds

E. P. CLARK

Bureau of Entomology and Plant Quarantine, U. S. Department of Agriculture, Washington, D. C.

In a recent communication (*1*) the writer presented a general method for the determination of acetyl, based upon the principle of an alkaline, alcoholic hydrolysis of an acetyl compound, followed by acidification and distillation of the liberated acetic acid. For the distillation the alkali was neutralized with enough strong magnesium sulfate solution containing sulfuric acid, so that the reaction mixture had a volume of 20 cc. This was steam-distilled at constant volume until 50 cc. of distillate were obtained. The acetic acid which came over under these conditions represented 95.7 per cent of the total acetic acid formed by the hydrolysis of the acetyl compound.

The procedure gives satisfactory results, but if it is carried out as previously outlined, except that the distillation of the liberated acetic acid is conducted at such a rate that the reaction mixture is concentrated to approximately 15 cc. during the collection of the 50 cc. of distillate, the entire quantity of acetic acid is found in the distillate. This procedure is simpler and more conveniently conducted than if the distillation is carried out at constant volume; the use of an arbitrary factor is eliminated and the results are as accurate as those obtained by the former method.

In the new procedure a blank must be run upon the reagents for a given set of conditions, as was recommended in the case of N-acetyl compounds.

Literature Cited

(1) Clark, E. P., Ind. Eng. Chem., Anal. Ed., 8, 487 (1936).

Received September 22, 1937. Presented before the Microchemical Section at the 94th Meeting of the American Chemical Society, Rochester N. Y., September 6 to 10, 1937.

The Kauri Butanol Test for Solvent Power. II

E. L. BALDESCHWIELER, M. D. MORGAN, AND W. J. TROELLER
Standard Oil Development Company, Linden, N. J.

A microprocedure for the determination of kauri butanol solvent power has been developed and the solvent powers of a number of hydrocarbons have been determined. A method for correlating the solvent power results with the structure of the hydrocarbons has been worked out which provides an additional tool for the analysis of hydrocarbon mixtures.

THE kauri butanol test is a procedure primarily used for evaluating the diluting or solvent power of solvents of petroleum origin to be used as thinners for paints and varnishes. This test was officially adopted by the Paint and Varnish Superintendents' Club of the Philadelphia District (*4*). The term "solvent power" was originally used by Kiehl (*3*). According to that author, solvent power is the amount of a given solvent that can be added to a standard kauri gum solution in butanol to produce a definite turbidity, as compared with the amount of C. P. benzene used in a similar titration and arbitrarily taken as 100 per cent standard.

In a previous paper (*1*) an improved method for standardizing kauri butanol solutions was proposed by the authors. Subsequent study of the data obtained in the course of this work suggested that the differences in solvent power among the various hydrocarbons used in the standardization of the kauri butanol solutions might be correlated with chemical structure. Additional work has, therefore, been carried out in the hope of obtaining a definite relation between kauri butanol solvent power and the structure of hydrocarbons. The results of this work are summarized herein and show that with the exception of a few compounds, a correlation can be established which may become a very useful tool for qualitative and even quantitative analyses of hydrocarbon mixtures.

Micromethod for Determining Solvent Power

Pure hydrocarbons, some of which are rare and expensive to prepare, were employed to carry out this work. Since the regular procedure to determine solvent power involves a great waste of material, an alternative method was evidently desirable. A microprocedure was therefore developed whereby the solvent powers could be determined on samples of less than 1 cc. with fair accuracy.

TABLE I. STANDARDIZATION OF THE KAURI SOLUTION BY THE MICROMETHOD

Compound	Kauri Solution Used	Compound Titrated		Kauri Butanol Value	Solvent Power
	Gram	*Cc.*			
C. P. Benzene	0.2236	1.25		111.8	100.0
	0.1962	1.10		112.8	100.0
			Av.	112.3	100.0
n-Heptane	0.2234	0.34		30.4	25.4
	0.2275	0.35		30.8	25.4
			Av.	30.6	25.4

Beard, Shipp, and Spelshouse (*2*) have shown that the kauri butanol value of a solvent is directly proportional to the amount of kauri solution used. In developing a micromethod, it was therefore only necessary to use a smaller sample of solvent, reduce the amount of the standard kauri solution proportionally, and carry out the titration with a microburet. However, the use of the prescribed end point (blurred appearance of a 10-point print paper when viewed through the liquid in the titrating vessel) was found to be impractical. A much sharper end point is obtained at the start of permanent turbidity.

In practice, the determination is carried out in a 5-cc. flat-bottomed test tube held by a metal plate placed over a small crystallizing dish containing water kept at the specified temperature (25° C., 77° F.). In the course of titration, the liquid in the test tube is stirred by means of a metal wire (iron, aluminum, or copper) terminating in a loop bent at a right angle to the stem. A 1-cc. buret divided into 0.01 cc. is used for the titration.

From 0.2 to 0.4 gram (instead of 20 grams as in the regular procedure) of the standard kauri solution is accurately weighed into the test tube; the latter is then inserted through the metal cover into the water bath kept at 25° C. (77° F.) and the solvent is added drop by drop from the buret to the point of permanent turbidity. The volume of the solvent used is read from the buret. The measured volume of solvent must then, of course, be converted to the amount which would have been necessary in the regular procedure using 20 grams of standard kauri solution. This can be accomplished by the simple proportion:

$$X = 20\,S/W$$

where X = kauri butanol value
W = weight of standard kauri solution used in grams
S = cc. of solvent used in the titration

The procedure used in computing results can be best illustrated by describing the standardization of the kauri solution for microwork. With 0.2236 gram of the kauri solution, 1.25 cc. of C. P. benzene were required to produce a permanent turbidity. Therefore, 20 grams of this kauri solution would require $\frac{20 \times 1.25}{0.2236} = 111.8$ cc. of benzene. Similarly, it was found that 0.2234 gram of the same kauri solution required 0.34 cc. of *n*-heptane, equivalent to 30.4 cc. of *n*-heptane for 20 grams. The two values, 111.8 and 30.4, are called the kauri butanol values of benzene and *n*-heptane, respectively. Previous work (*1*) had shown that if the solvent power of C. P. benzene was arbitrarily given a value of 100, the solvent power of *n*-heptane would be found to be 25.4 (provided the proper

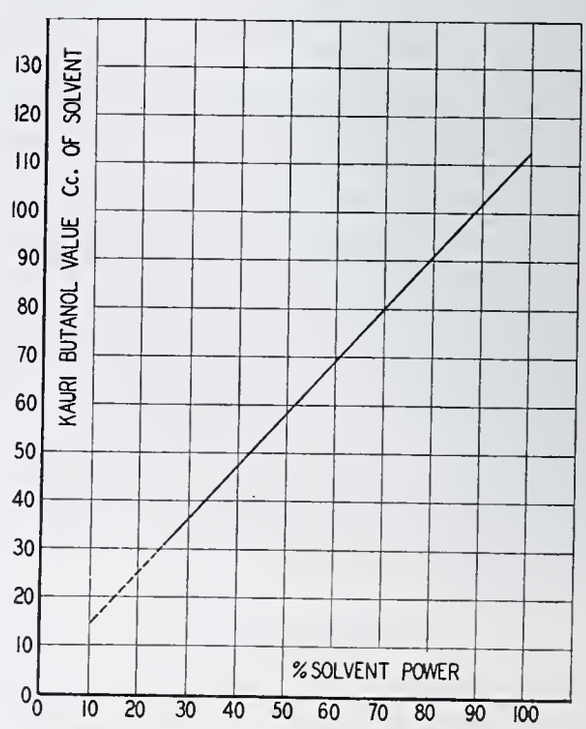

FIGURE 1. SOLVENT POWER CURVE OF KAURI BUTANOL STANDARD SOLUTION

Table II. Comparison of Results Obtained with the Micro- and Standard Methods

Hydrocarbon	Kauri Solution Used	Hydrocarbon Titrated	Kauri Butanol Value	Solvent Power: Micro-method	Solvent Power: Standard method	Solvent Power: Difference
	Gram	*Cc.*		%	%	%
n-Octane	0.2376	0.35	29.4	24.3	24.5	−0.8
Trimethylpentane	0.2226	0.335	30.1	24.7	24.6	+0.4
n-Tetradecane	0.2221	0.26	23.4	18.6	18.9	−1.6
Methylcyclohexane	0.2157	0.63	58.4	50.5	50.7	−0.4
Ethylbenzene	0.2339	1.14	97.5	86.5	87.6	−1.3
n-Butylbenzene	0.2278	0.91	79.8	70.1	70.1	0
Decahydronaphthalene	0.2159	0.76	70.4	61.6	60.5	+1.8

grade of kauri gum was used in preparing the standard solution). It is therefore only necessary to plot the kauri butanol values of c. p. benzene and *n*-heptane against their respective solvent powers and draw a straight line between these two points in order to obtain the standardization curve of the particular kauri solution used for this work. The curve as obtained from the data given in Table I is shown in Figure 1.

Comparative results of solvent power by the micro- and regular procedures on several hydrocarbons are given in Table II, and show that the microprocedure gives results with maximum deviations of under ±2 per cent from the regular procedure, an accuracy which is deemed to be sufficiently good for a test of this nature.

Solvent Power of Hydrocarbons

The solvent powers of a number of hydrocarbons were determined, using the micromethod when necessary. Some of the compounds were purchased from supply houses, while others were synthesized in the laboratory. In order to allow for differences in room temperatures when carrying out the tests and put the results on a comparable basis, the densities of the various hydrocarbons were obtained at room temperature with a 2-cc. pycnometer calibrated against water at 4° C. Solvent power results can then be expressed on a weight basis by multiplying volume results by respective densities.

Table III. Solvent Power of Paraffin Hydrocarbons

Hydrocarbon	Formula	Number of Carbon Atoms	Solvent Power	Density	Solvent Power by Weight
n-Pentane	C_5H_{12}	5	33.8	0.624	21.1
Isopentane	C_5H_{12}	5	28.8	0.617	17.7
n-Hexane	C_6H_{14}	6	26.5	0.660	17.5
2-Methylpentane	C_6H_{14}	6	25.0	0.654	16.5
n-Heptane	C_7H_{16}	7	25.4	0.684	17.4
n-Octane	C_8H_{18}	8	24.5	0.707	17.3
Isoöctane	C_8H_{18}	8	24.3	0.704	17.2
Trimethylpentane	C_8H_{18}	8	24.7	0.722	17.8
Diisoamyl	$C_{10}H_{22}$	10	24.5	0.730	17.9
Dodecane	$C_{12}H_{14}$	12	18.7	0.751	14.0
n-Tetradecane	$C_{14}H_{16}$	14	18.6	0.767	14.3
n-Hexadecane	$C_{16}H_{34}$	16	14.3	0.777	11.1

The results are given in Tables III to VI. It is, of course, realized that the list of the hydrocarbons tested is not very comprehensive, representing only a few compounds chosen from the best known series. These hydrocarbons are merely cited as examples, in order to show the possibilities inherent to the method and illustrate the procedure used in computing the solvent powers of the various types of hydrocarbons.

The results in Table III show that the solvent powers of paraffin hydrocarbons decrease with increasing number of carbon atoms. The solvent power results have been plotted against the number of carbon atoms in Figure 2, and an average straight line has been drawn through the various points. From the equation of this line

$$y + 0.6\,x = 22 \qquad (1)$$

where x is the number of carbon atoms and y represents the solvent power (by weight), the solvent power of any paraffin hydrocarbon can be calculated.

The solvent power of a few olefins is given in Table IV. The results show that the introduction of a double bond definitely increases the solvent power of saturated hydrocarbons. Since the solvent power of paraffins decreases with increasing molecular weights, the data indicate that the effect of the double bond must increase with increasing molecular weight. In other words, between two hydrocarbons of the same number of carbon atoms alike in structure, except that one has a double bond and the other no double bond, it has been found that the former will have higher solvent power. In view of the fact that purity of the olefin samples tested was questionable, no mathematical correlation has been tried.

Table IV. Solvent Power of Olefin Hydrocarbons

Hydrocarbon	Formula	Number of Carbon Atoms	Solvent Power	Density	Solvent Power by Weight
Hexene	C_6H_{12}	6	33.6	0.683	23.0
Octylene	C_8H_{16}	8	36.5	0.722	26.4
Diisobutylene	C_8H_{16}	8	35.2	0.719	25.4
Diisoamylene	$C_{10}H_{20}$	10	35.8	0.773	27.7
Triisobutylene	$C_{12}H_{24}$	12	32.3	0.758	24.5

Table V gives the solvent power of representative naphthenes of the cyclohexane series. The values show that the solvent powers of the naphthenic hydrocarbons of the cyclohexane series decrease with increasing length of the paraffinic side chain. It would seem logical to expect that the solvent power of any hydrocarbon in this series should consist of the sum of the ring solvent power "effect" plus the paraffinic solvent power "effect." These various effects should also be proportional to the number of carbon atoms of each type. For example, methylisopropylcyclohexane possesses 6 naphthenic and 4 paraffinic, or a total of 10 carbon atoms. The naphthenic effect should therefore be equal to $^6/_{10}$ of the solvent power of the original ring and the paraffinic effect to $^4/_{10}$ of that of the paraffin having the corresponding number of carbon atoms, or butane, in this case. Therefore, the solvent power of any hydrocarbon in the cyclohexane series should be:

$$S = 42.1\left(\frac{6}{P+6}\right) + y\left(\frac{P}{P+6}\right) \qquad (2)$$

where

S = solvent power by weight
42.1 = solvent power of cyclohexane
P = number of paraffinic carbon atoms
6 = number of naphthenic carbon atoms
y = solvent power of the paraffin having P carbon atoms

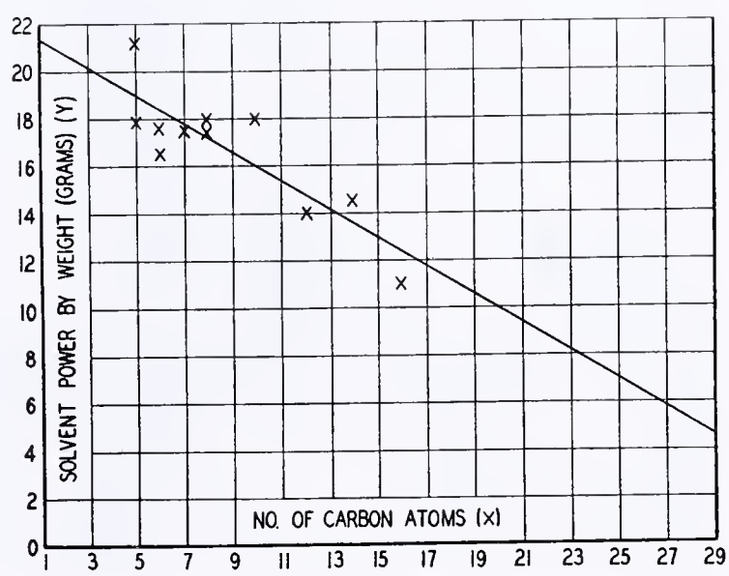

Figure 2. Solvent Power of Pure Paraffin Hydrocarbons
Equation for curve: $y + 0.6\,x = 22$

The value of y can be computed from Equation 1 or obtained directly from the curve in Figure 2.

The curve represented by Equation 2 has been plotted in Figure 3. There are also plotted in Figure 3 experimental values, shown as small circles, of the solvent powers of five hydrocarbons. The calculated and experimental values are given in Table V. The agreement is good when allowance is made for inaccuracies in the method and the possible presence of impurities in some of the compounds.

In the same way the solvent powers of aromatic hydrocarbons have been calculated and compared with experimental values. The calculations were made using Equation 2, introducing 87.8, the solvent power of benzene, in place of 42.1, the solvent power of cyclohexane. The values are shown in Table VI and the curve in Figure 4.

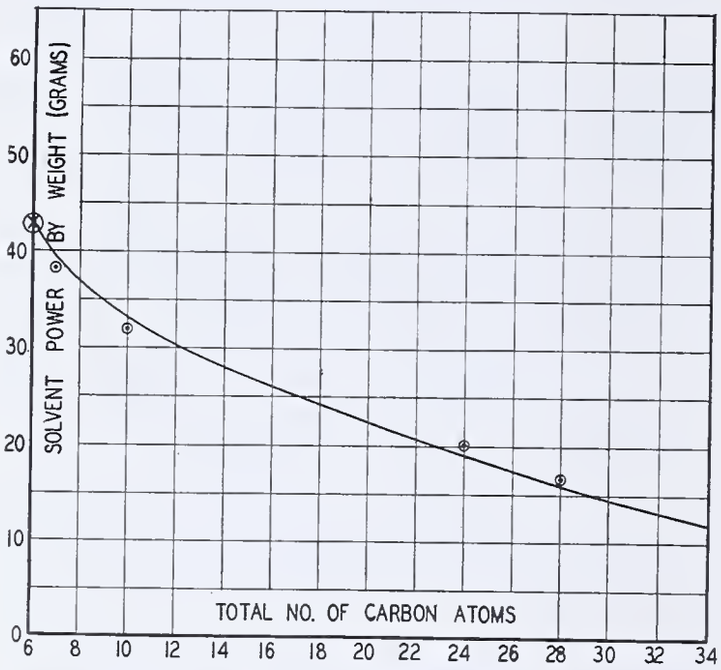

FIGURE 3. SOLVENT POWER OF NAPHTHENIC HYDROCARBONS, CYCLOHEXANE SERIES

Comparison of actual with calculated values
Actual determinations ⊗

Curve plotted from equations: $S = 42.1\left(\frac{6}{P+6}\right) + y\left(\frac{P}{P+6}\right)$

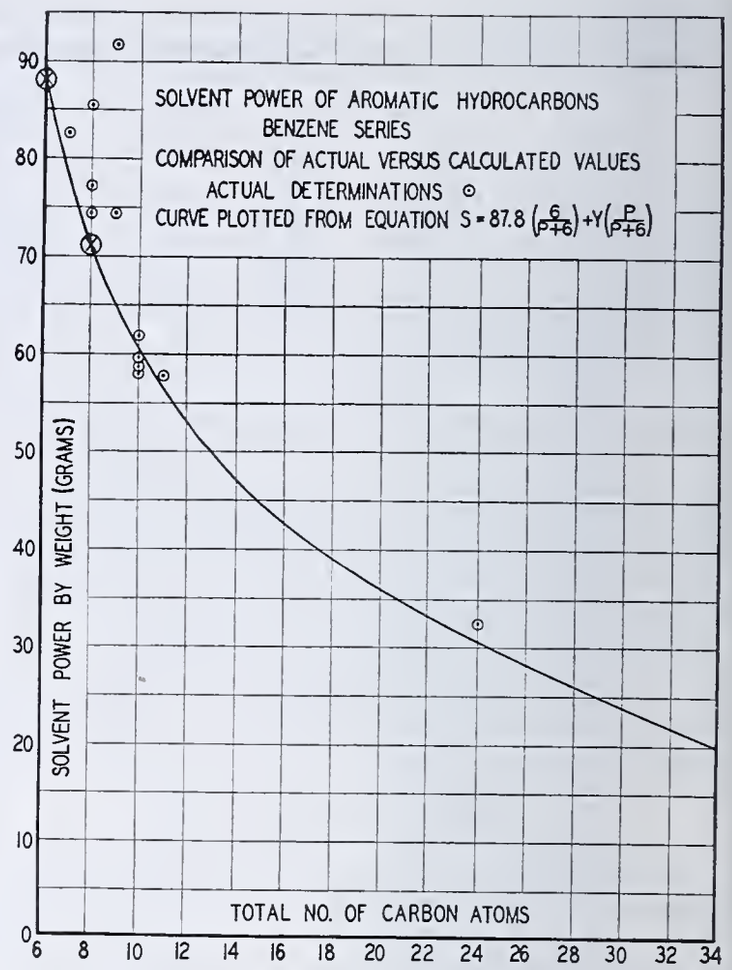

FIGURE 4. SOLVENT POWER OF AROMATIC HYDROCARBONS, BENZENE SERIES

A comparison of the calculated with the experimental values shows, with some exceptions, fair agreement. These exceptions are principally *o*- and *m*-xylenes, pseudocumene, mesitylene, and, to a lesser extent, toluene. It should be noted that the calculated and experimental data for the symmetrical xylene are practically identical. In view of the fact that some of the above compounds were known to be very pure, it is felt that these discrepancies may be due to the disturbing effect of the first substituted methyl group. This explanation does not appear illogical, inasmuch as the first member of hydrocarbons in a given series often exhibits physical properties which are not in line with those of other hydrocarbons of the same series. The data on the naphthene and benzene hydrocarbons show that, in general, the solvent power of the compounds is affected by total length of the paraffinic chains, not the number of positions replaced in the ring.

TABLE V. SOLVENT POWER OF SOME NAPHTHENIC HYDROCARBONS

Compound	Formula	No. of Carbon Atoms	Solvent Power	Density	Solvent Power Times Density Found	Calculated
Cyclohexane	C_6H_{12}	6	54.3	0.775	42.1	..
Methylcyclohexane	$C_6H_{11}CH_3$	7	50.5	0.764	38.6	39.1
Methylisopropylcyclohexane	$C_6H_4CH_3$-C_3H_7	10	39.3	0.820	32.2	33.1
Octadecylcyclohexane	$C_6H_{11}C_{18}H_{37}$	24	24.2	0.834	20.4	18.9
Heptadecyl-*n*-butylcyclohexylmethane	$C_6H_{11}CHC_4$-$H_9C_{17}H_{35}$	28	19.8	0.8395	16.6	15.9

TABLE VI. SOLVENT POWER OF SOME AROMATIC HYDROCARBONS

Compound	Formula	No. of Carbon Atoms	Solvent Power	Density	Solvent Power Times Density Found	Calculated
Benzene	C_6H_6	6	100.0	0.878	87.8	..
Toluene	$C_6H_5CH_3$	7	93.7	0.882	82.6	78.4
o-Xylene	$C_6H_4(CH_3)_2$	8	99.0	0.879	87.0	71.1
m-Xylene	$C_6H_4(CH_3)_2$	8	89.6	0.863	77.3	71.1
p-Xylene	$C_6H_4(CH_3)_2$	8	82.5	0.861	71.0	71.1
Ethylbenzene	$C_6H_5C_2H_5$	8	85.7	0.868	74.4	71.1
Cumene	$C_6H_5CH(CH_3)_2$	9	75.7	0.864	65.2	65.2
Mesitylene	1,3,5-$C_6H_3(CH_3)_3$	9	85.9	0.863	74.2	65.2
Pseudocumene	1,3,4-$C_6H_3(CH_3)_3$	9	105.5	0.870	91.8	65.2
n-Butylbenzene	$C_6H_5C_4H_9$	10	68.7	0.862	59.2	60.5
tert-Butylbenzene	$C_6H_5C_4H_9$	10	71.7	0.867	62.2	60.5
Methylisopropylbenzene	$C_6H_4CH_3C_3H_7$	10	68.3	0.857	58.5	60.5
tert-Amylbenzene	$C_6H_5C_5H_{11}$	11	66.0	0.874	57.7	56.5
Octadecylbenzene	$C_6H_5C_{18}H_{37}$	24	37.0	0.906	32.6	30.4

Applications of the Procedure

From the above results and discussion it is evident that, given the solvent power of the first member of a hydrocarbon series, it is possible to calculate, or at least obtain a fair idea of the solvent power of other hydrocarbons of the same series. Conversely, the solvent power of an unknown hydrocarbon should give a clue to its composition and structure, thus providing an additional constant.

The method is rapid (about 20 minutes per determination) and very useful in hydrocarbon analysis, such as the examination of commercial hydrocarbon solvents. The method will give valuable indications when used in conjunction with other

physical constants, such as boiling point, etc., in the examination of narrow cuts consisting of isomeric and azeotropic mixtures. Thus the presence of large amounts of *o*-xylene in a close xylene cut can be readily detected. The method is also useful in determining efficiencies of fractionating columns by determining the solvent powers of the cuts obtained by the fractionation of close-boiling binary hydrocarbon mixtures.

Acknowledgment

The authors wish to express their appreciation to H. E. Buc, L. A. Mikeska, and R. G. Sloane of these laboratories for their valuable suggestions and criticisms.

Literature Cited

(1) Baldeschwieler, E. L., Troeller, W. J., and Morgan, M. D., Ind. Eng. Chem., Anal. Ed., **7**, 374 (1935).
(2) Beard, L. C., Shipp, V. L., and Spelshouse, W. E., *Ibid.*, **5**, 307 (1933).
(3) Kiehl, J. R., *Am. Paint Varnish Mfrs. Assoc., Circ.* **319**, 585–96 (1927).
(4) Stewart, J. R., *Ibid., Circ.* **378**, 143–53 (1931).

Received July 8, 1937.

Determination of Small Proportions of Sulfur

By a Modification of the A. S. T. M. Lamp Method

VICTOR ZAHN, Shell Development Company, Emeryville, Calif.

Refinements of the standard lamp method are described which extend its range to the analysis of 0.0001 per cent of sulfur, in liquids or gases. Purified air for combustion, and turbidimetric estimation of sulfur as barium sulfate, permit high accuracy and reproducibility.

THE determination of the sulfur content of volatile organic compounds by A. S. T. M. method No. D90-34T, which consists in burning a weighed sample in a lamp and determining the acidity of the products of combustion, is subject to large errors when the material being analyzed contains less than 0.01 per cent of sulfur. There are two important sources of error. The first is the impurities in the relatively large volume of air used for combustion. The effect on the analysis of sulfur dioxide or hydrogen sulfide in the air is obvious; but nonsulfurous substances, such as fumes of acids or ammonia, may also pass into the absorber liquid and influence the final titration. The second source of error, which cannot be neglected in the analysis for small proportions of sulfur, is the formation of small amounts of acids in the flame: nitric acid by oxidation of atmospheric nitrogen, and organic acids by incomplete combustion of organic materials.

It is, of course, possible to apply corrections for impurities in the air by running blank samples; but since variations in air flow through individual lamps or fluctuations of flames may destroy the uniformity of the conditions, it seems preferable not to have to rely on blank determinations when high accuracy is desired. Therefore, in this modification of the standard method, purified air is used for combustion of the sample. The effect of nonsulfurous acids formed in combustion is eliminated by determining sulfur as barium sulfate.

Methods using purified air have been described (*1*, *2*, *3*), but the apparatus involved have not been convenient when large numbers of routine analyses were required. The arrangement described below, which uses purified air in a special lamp, permits the combustion of volatile liquids, including those that tend to burn with smoky flames in the standard A. S. T. M. apparatus; the equipment can also be adapted to the analysis of gases or liquefied gases under pressure. The products of combustion are absorbed in a solution of sodium hypobromite; after precipitation of the sulfate from the absorbing solution by barium chloride, barium sulfate is determined turbidimetrically. It has been found possible to analyze accurately for proportions of sulfur as low as 0.0001 per cent.

Apparatus and Reagents

The Air-Purification System. The air for combustion is purified by heating it to a high temperature and then scrubbing with hypobromite and caustic solutions. It is

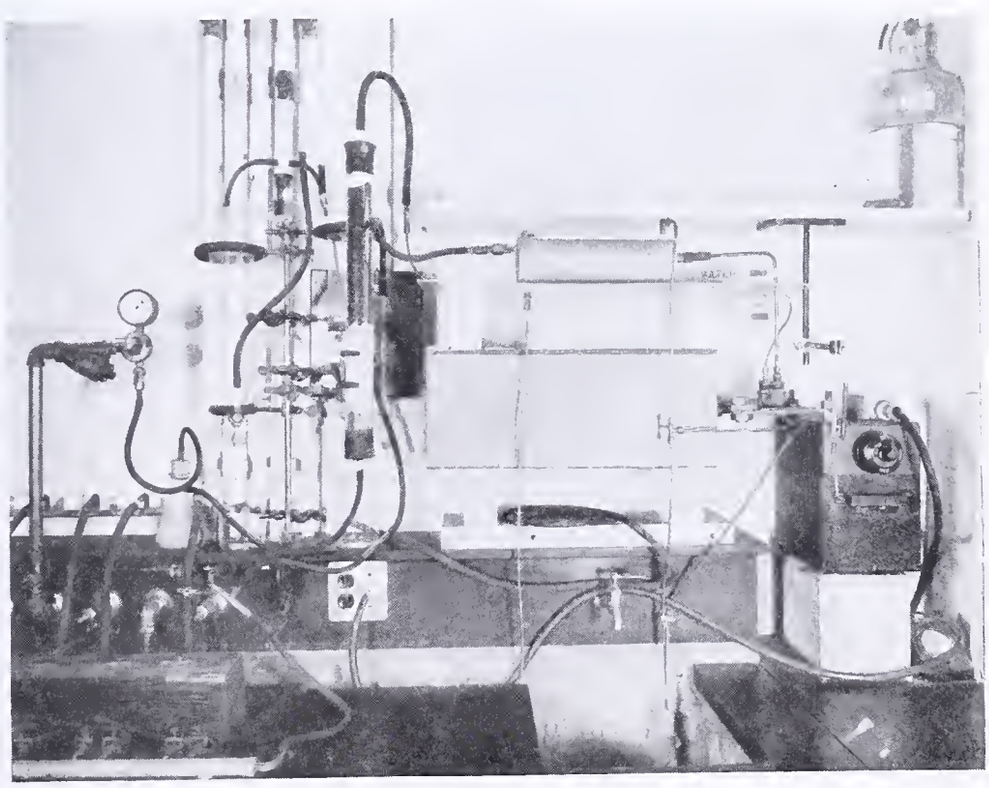

Figure 1. Equipment for Purifying Air

first passed through a tube containing cotton and a layer of activated charcoal and then through a stainless steel tube heated by electrical resistance; the exit half of the tube is filled with coarse quartz chips. The exit air should have a temperature of about 500° C.; for a battery of ten lamps, the air required will be sufficiently heated if the surface of the center portion of the tube is kept at approximately 800° C. The temperature of the tube may be estimated roughly from the brightness of the metal observed through a peephole in the insulation, or an optical pyrometer may be used. The heated air is water-cooled in a small copper-coil condenser and finally led into two large cylindrical scrubbers equipped with fritted-glass plates (20- to 25-mesh); the first scrubber contains a 2 per cent solution of sodium hypobromite (stock absorbing liquid) and the second 5 per cent sodium hydroxide. Details of the tube furnace are shown in Figures 1 and 2.

Merely scrubbing the air without preheating it is not sufficient to remove sulfurous impurities completely. With the equipment described, however, blank determinations made by passing the purified air over platinum in a hot tube and into an absorber showed that 5 hours' running produced a negligible turbidity (as barium sulfate). Consequently, no correction for sulfurous impurities in the air is necessary, and inaccuracies resulting from variations in air flow through the individual lamps are obviated.

The Burner. The burner (Figure 3) consists of two coaxial glass tubes, which extend upward to the same height to form the burner tip, and are sealed together at the bottom. A side inlet into the outer tube admits the air which, when needed, supports the combustion at the base of the flame, and a small hole near the seal joining the tubes permits the pressure to equalize between the sample flask and the combustion chamber.

For use with gases and liquefied gases a Bunsen microburner is used; it is connected to the source of purified air by means of a short piece of metal tubing soldered to the air inlet at the bottom of the burner. A metal cylinder 3 cm. in length and 1.5 cm. in diameter is soldered to the base of the burner to support the cork by which the burner is sealed to the chimney. Such a burner may be seen in Figure 7, in the lamp at the extreme left of the battery.

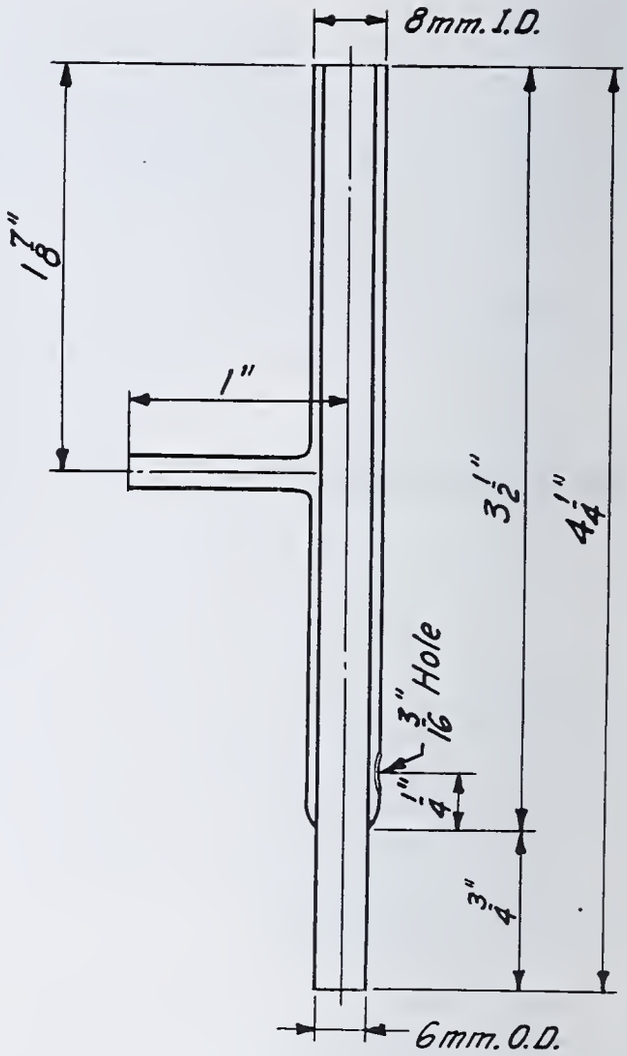

Figure 3. Burner

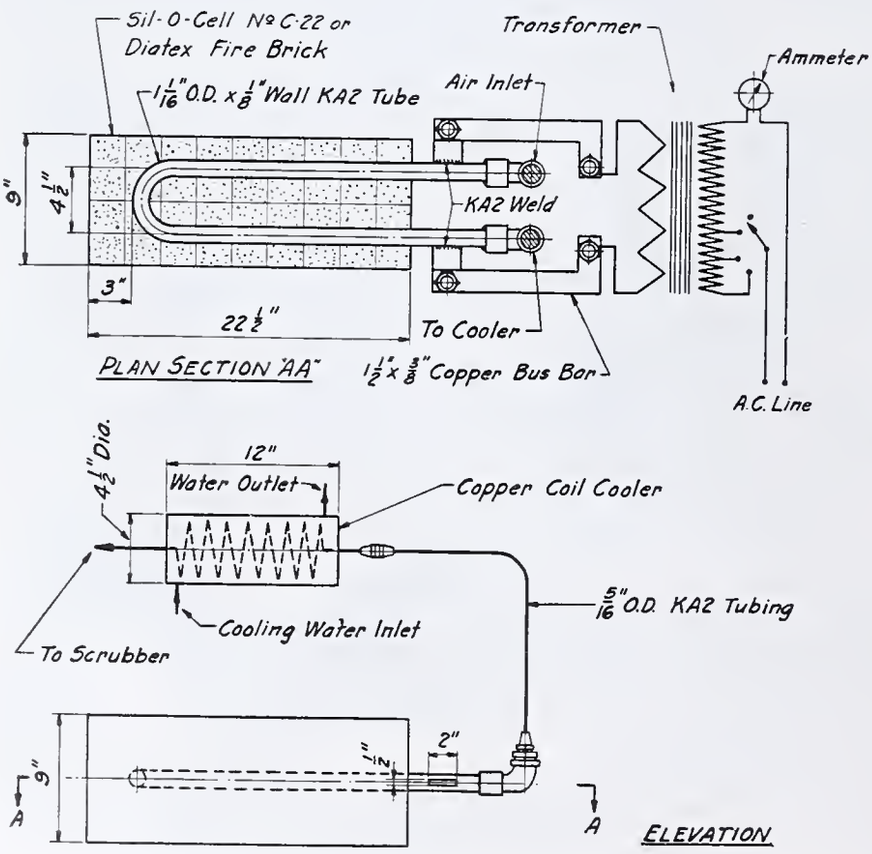

Figure 2. Detail of Resistance Furnace

The Chimney. The chimney is shown in detail in Figure 4. The inner chamber is similar to the conventional chimney, but the new design includes an outer cylindrical chamber, which is constricted at the bottom and sealed to the burner by a cork stopper, and a side inlet at the top which admits purified air to the annular space between the essential chimney and the outer chamber.

Cork stoppers seal the burner to the sample flask below and the chimney above. In operation, most of the air enters the assembled lamp (Figure 5) through the upper inlet, and passes evenly downward through the annular space and into the chimney, from which it sweeps the products of combustion into the absorber.

The Absorber. The usual A. S. T. M. absorbers may be used. A modified design, however, with a fritted-glass plate (30- to 35-mesh) sealed near the bottom (Figure 6), instead of glass-bead packing, permits gases from the combustion chamber to pass through more steadily and minimizes flickering. A Kjeldahl connecting bulb with a single straight tip serves as a spray trap.

Reagents. A solution of 2 per cent c. p. sodium hydroxide and 2 per cent c. p. bromine in distilled water is used as absorbing liquid. Fifteen milliliters of this stock solution plus 10 to 15 ml. of distilled water are used in each absorber.

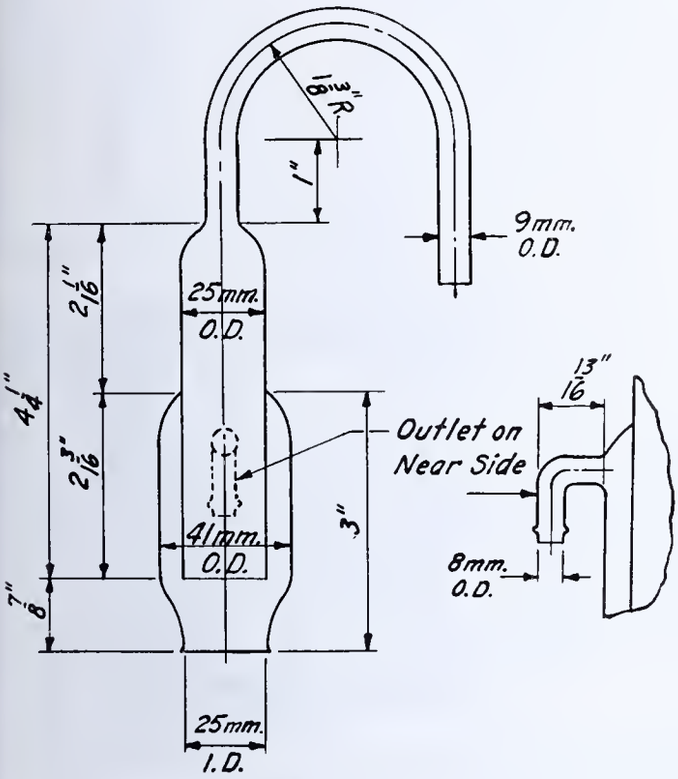

Figure 4. Chimney

The turbidimetric determination of sulfur requires 1 N hydrochloric acid; 20 per cent solution of c. p. sodium hydroxide; alcohol-glycerol solution, containing 67 per cent by volume of denatured ethyl alcohol (Formula 3A) and 33 per cent of glycerol U. S. P.; and c. p. barium chloride crystals, $BaCl_2 \cdot 2H_2O$, 20- to 30-mesh.

Procedure

Combustion. Four strands of sulfur-free cotton wicking are threaded into the inner tube of the burner. The wick is primed with the liquid to be tested, cut off evenly, flush with the top of the tube, and drawn down 1 or 2 mm. so as not to leave any protruding filaments. For volatile materials like acetone, it may be necessary to draw the wick down 15 to 20 mm. in order to obtain a flame of proper size.

The arrangement in use at present (shown in Figure 7 in partial view) consists of a battery of ten lamps connected to a manifold that distributes air at constant pressure to each lamp through separately regulated inlets to burner and chimney. In putting a battery of lamps into operation, it is best to start with the lamps in place and sufficient air flowing through the manifold to supply all the lamps and the constant-pressure release valve, but with all the pinchclamps on the rubber tubing to the burners closed. One lamp at a time is then removed from its chimney, lighted with an alcohol lamp, adjusted, and put back into the neck of the chimney. The entire battery can readily be set in operation within a few minutes.

Any further adjustment is made after the lamps have been lighted by changing the rate of air flow to the burner or to the chimney. The steadiest flames are obtained with the system under slight pressure with no suction on the absorber, and with only the air needed for good combustion passing through the burner. The rest of the air needed for an analysis enters the system through the chimney; in this way the flame is not cooled below the ignition temperature for less combustible substances by the current of primary air, nor disturbed by too rapid flow of air through the lamp, and the danger of extinguishing the flame is minimized. No suction is required for burning liquid samples, but suction on the absorber may be used in starting the combustion of gases or liquefied gases with the microburner described above.

The amount of sample burned is determined by the loss in weight of the lamp and sample flask, as in the standard method. According to the proportion of sulfur present, approximately the following amounts of sample should be burned:

Sulfur %	Weight of Sample Burned *Grams*
0.0001 and less	10 or more
0.0002 to 0.0006	10
0.0007 to 0.0015	5
0.0016 to 0.006	4
0.007 to 0.015	2

Turbidimetric Determination. After the sample is burned, the absorber liquid is made ready for the determination of sulfate with a Betz-Hellige turbidimeter (*5*). This instrument compares the intensity of light scattered laterally by a solution containing barium sulfate with that transmitted by the solution. The intensity of the transmitted light may be altered by means of a precision slit, so that the illumination from the separate beams may be balanced. The liquid from the absorber, with the washings from absorber, spray trap, and chimney, is transferred to an Erlenmeyer flask, acidified with 15 ml. of 1 N hydrochloric acid, boiled to remove carbon dioxide and excess bromine, and concentrated to about 25 ml. It is then made slightly alkaline to phenolphthalein with a 20 per cent solution of sodium hydroxide, and exactly neutralized with 1 N hydrochloric acid, after which 3 ml. more of the acid are added, and the solution is filtered through Whatman No. 42 filter paper into a 50-ml. volumetric flask and made up to the mark with distilled water.

The contents of the flask are transferred to the 20-mm. optical cell of the turbidimeter and 10 ml. of the alcohol-glycerol solution are stirred into the solution with a rubber-tipped glass rod; the initial turbidity, if any, is then determined. In accurate work, samples showing initial turbidity should be discarded and the analysis repeated; however, it is possible to correct the final results for initial turbidity. After the standard measure (supplied with the turbidimeter) of barium chloride crystals has been added to the solution, the turbidity is determined as described in (*5*).

When the absorber liquid contains more than 0.6 mg. of sulfur, it is usually more accurate to take a carefully measured aliquot,

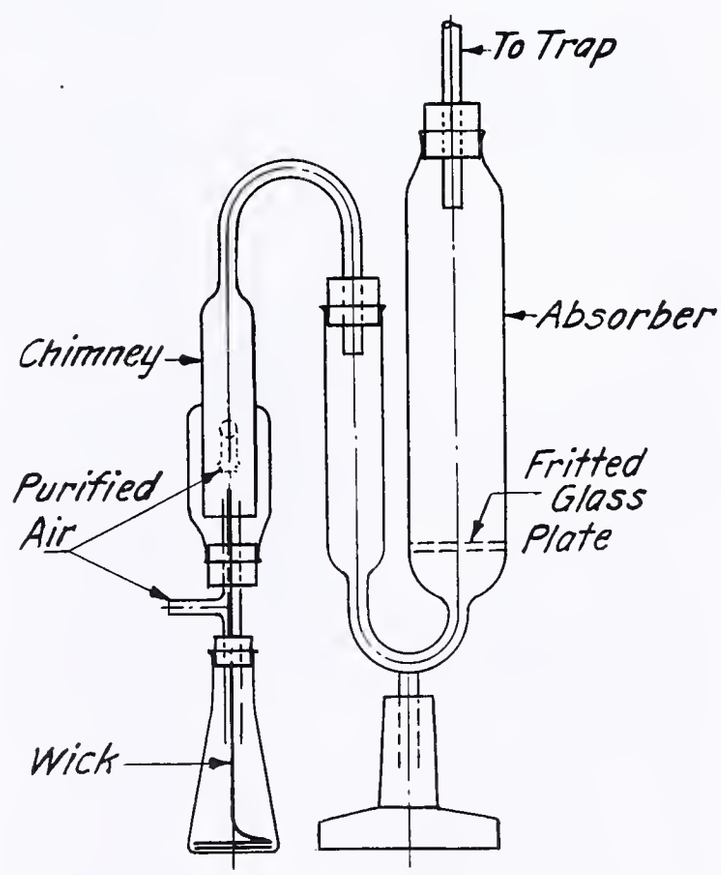

Figure 5. Assembly

say one-half or one-fifth, of the 50 ml. of solution, dilute it to 50 ml., and use the 20-mm. cell, than to use the smaller cell. But errors in dial reading are then multiplied by the reciprocal of the aliquot. If, however, the 10-mm. cell is used, 25 ml. of the 50 ml. of original solution are used and 5 ml. of alcohol-glycerol are added. The clear filter is, of course, necessary. Otherwise the procedure is exactly as described.

Blank determinations are made in the turbidimeter on all the reagents, including those used in the preparation of the reference curves, in the amounts used in the analysis and the proportions of sulfur so found are deducted from the total amount found in the final turbidimetric determination of the sample. Blank determinations made on the purified air, by passing it through the absorber liquid for the time taken to burn a sample and with about the same velocity as in the analysis, must be negative.

The colloid-protecting alcohol-glycerol solution substituted for the salt-acid solution (*5*), in the final treatment of the absorber liquid before precipitation, appears to improve the sensitivity of the turbidimetric determination to very small amounts of sulfate. Furthermore, it minimizes particle growth of the barium sulfate suspension during adjustment of the turbidimeter; the protected suspension is sufficiently stable that turbidimeter

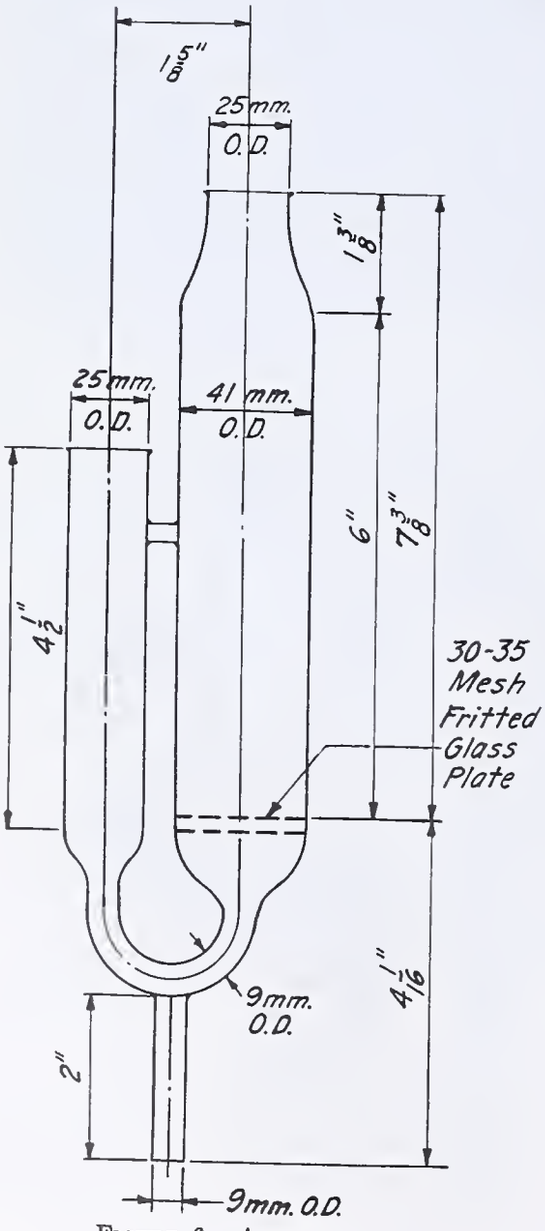

FIGURE 6. ABSORBER

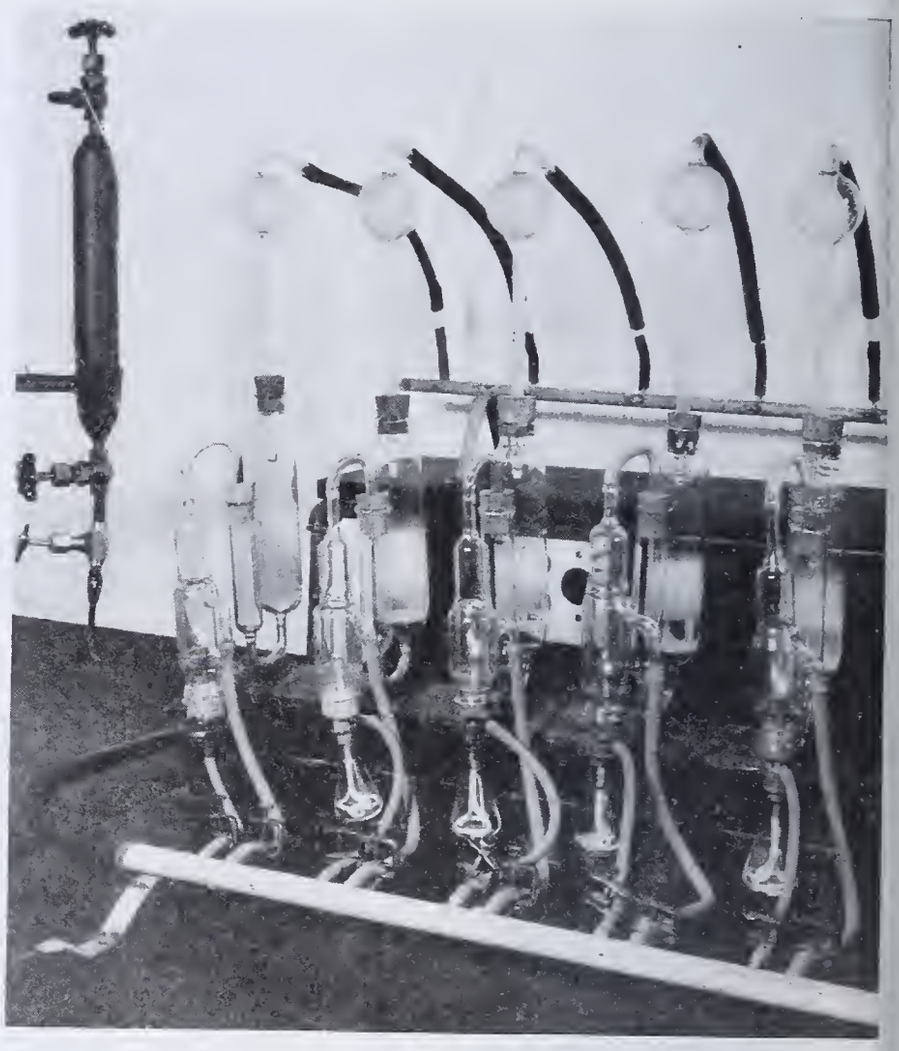

FIGURE 7. LAMPS IN OPERATION

readings taken over the interval from 3 to 12 minutes after precipitation show little variation.

REFERENCE CURVES FOR THE TURBIDIMETER. Because of modifications which have been made in the turbidimetric procedure, a set of reference curves relating dial setting to milligrams of sulfur in the sample should be prepared for each turbidimeter; the data for the curves should be found by a procedure as nearly as possible like that for analysis. A curve for each of the following ranges is necessary:

Range	Sulfur *Mg.*	Filter	Cell *Mm.*
I	0 to 0.08	Gray	20
II	0 to 0.26	Milk	20
III	0 to 0.6	Clear	20
IV	0 to 1.8	Clear	10

The additional reagents needed are C. P. sodium sulfate, $Na_2SO_4 \cdot 10H_2O$; and a solution of 1 *N* C. P. sodium chloride containing 200 ml. of 1 *N* hydrochloric acid per liter. The solution must be filtered until zero turbidity is obtained.

Two standard sodium sulfate solutions are made up, one containing 0.1 mg. of sulfur per ml. and the other 0.2 mg. per ml., both of which must be checked by gravimetric analysis. The first solution and a 1 to 10 dilution of it are used for the data in ranges I to III; the second is used with the 10-mm. cell to determine range IV. Fifteen milliliters of the acid sodium chloride solution are measured into a 50-ml. volumetric flask, the proper amount of standard sodium sulfate solution is added, and the solution is made up to 50 ml. with distilled water. For determinations in the first three ranges the whole solution is transferred to the 20-mm. cell, 10 ml. of alcohol-glycerol are added, and the precipitation and reading are made as previously described. For range IV, 25 ml. of the contents of the volumetric flask are put in the 10-mm. cell, 5 ml. of alcohol-glycerol are added, and the described procedure is followed. Obviously the milligrams of sulfur found from a curve prepared in this way for

TABLE I. DETERMINATION OF SULFUR

Sample	Sulfur Added to Hydrocarbon	Individual Determinations							Mean of Determinations	Sulfur Present in Sample	Standard Deviation
	%	%	%	%	%	%	%	%	%	%	%
1	None	0.00020	0.00022	0.00019	0.00018	0.00019	.....	.....	0.00020	0.00020 (by analysis)	0.000017
		0.00021	0.00029[a]	0.00020	0.00023	0.00022	.....	.....			
2	0.0001	0.00030	0.00031	0.00033	0.00030	0.00035	.....	.....	0.00033	0.00030	0.000025
		0.00036	0.00036	0.00031	0.00030	0.00037	.....	.....			
3	0.0003	0.00044	0.00048	0.00046	0.00052	0.00051	.....	.....	0.00050	0.00050	0.000029
		0.00051	0.00049	0.00054	0.00049	0.00054	.....	.....			
4	0.0005	0.00066	0.00065	0.00067	0.00073	0.00073	.....	.....	0.00070	0.00070	0.000042
		0.00065	0.00068	0.00072	0.00079	0.00077	.....	.....			
5	0.001	0.00120	0.00119	0.00118	0.00118	0.00123	0.00125	0.00123	0.00119	0.00120	0.000051
		0.00119	0.00119	0.00119	0.00115	0.00118	0.00119	0.00115			
6	0.002	0.00222	0.00223	0.00222	0.00221	0.00215	.....	.....	0.00217	0.00220	0.00010
		0.00218	0.00198	0.00231	0.00198	0.00224	.....	.....			
7	0.005	0.0050	0.0052	0.0052	0.0052	0.0051	0.0052	0.0051	0.00514	0.00520	0.00010
		0.0051	0.0051	0.0051	0.0050	0.0052	0.0052	0.0053			
8	0.010	0.0101	0.0103	0.0101	0.0101	0.0100	0.0102	0.0104	0.0102	0.0102	0.00012
		0.0103	0.0103	0.0100	0.0102	0.0102	0.0101	0.0103			

[a] Result discarded on Chauvenet's criterion (4). This value is not included in the mean.

range IV and the 10-mm. cell will be the amount contained in the 50-ml. sample.

Accuracy and Precision of Results

The method was tested by analyzing a hydrocarbon of low, unknown sulfur content, and the same hydrocarbon containing varying, known, added amounts of sulfur as dimethyl disulfide. A series of ten or more analyses was made at each of eight different sulfur concentrations; the results of the individual determinations are given in Table I.

The precision of the method may be judged from the last column, which shows the standard deviation for each series of analyses; the value given is, in each case, within 20 per cent of that for an infinite number of determinations.

In establishing the accuracy of this method of analysis, it was necessary to use the method itself to find the original sulfur concentration of the hydrocarbon used as diluent; consequently, the systematic error of the result for Sample 1 cannot be stated, although it may be assumed to be low from the accuracy with which the added amounts of sulfur in the other samples were determined. The means of the determinations and the percentages of sulfur in the samples are presented in adjacent columns. The systematic errors are small; when the standard errors at the various concentrations are calculated on the basis of four individual analyses, the systematic errors are not statistically significant.

Literature Cited

(1) Edgar and Calingaert, IND. ENG. CHEM., Anal. Ed., 2, 104 (1930).
(2) Engler, *Chem.-Ztg.*, 20, 197 (1896).
(3) Jackson and Richardson, *J. Inst. Petroleum Tech.*, 7, 27 (1921).
(4) Mellor, "Higher Mathematics for Students of Chemistry and Physics," 3rd ed., p. 563, New York, Longmans, Green and Co., 1909.
(5) Sheen, Kahler, and Ross, IND. ENG. CHEM., Anal. Ed., 7, 262 (1935).

RECEIVED August 4, 1937.

A Modification of the A. S. T. M. Lamp Sulfur Method for Refined Kerosenes

EDWARD FIELD AND FRED H. DEMPSTER
Standard Oil Company of California, San Francisco, Calif.

The lamp method for the determination of sulfur in petroleum oils, A. S. T. M. Designation D90-34T, has been modified to obtain a considerably greater degree of accuracy on refined kerosenes. It may be used with improved accuracy on other refined oils for which the foregoing A. S. T. M. method is suited. Data are given to show that it is essential to use purified air during burning, a greater amount of sample must be burned, hydrogen peroxide is preferred as an absorbing medium, and if accurate, reliable results are to be obtained, the total sulfur after absorption must be determined by gravimetric means.

IT HAS been recognized for many years that sulfur in the lighter fractions from petroleum may be determined by burning the sample in a small wick lamp of varying design and absorbing the resultant vapors in a suitable medium. The amount of sulfurous gases thus absorbed is then determined by volumetric methods, from which the sulfur content is calculated.

Various forms of apparatus have been designed from time to time, notably by Richardson (7), Edgar and Calingaert (2), Charlesworth, Harris, and Linder (1), Espach and Blade (4), Engler-Heuser (3), and others, in which these principles are utilized. A number of improvements have thus been suggested, but in the establishment of a standard test, the most practical method for routine control testing is the present A. S. T. M. procedure which has since been adopted by other bodies such as the Institution of Petroleum Technologists (5). This test has been found deficient in certain respects by various laboratories; the lamp needs a simple device for

flame adjustment, complete absorption in the sodium carbonate of products of combustion is questioned, and the end point with methyl orange is sometimes difficult to determine, particularly if the lamp has smoked. These factors become of increasing importance as the sulfur content of kerosene is reduced by the application of refining agents. In fact, recent investigations in the authors' laboratories have shown that the A. S. T. M. method is definitely unsuitable for the determination of the actual total sulfur content of a highly refined kerosene of the order of 0.010 per cent or less. Inasmuch as accurate data were required on such stocks, it was imperative that modifications be introduced.

Development of Modified Method

In developing the modified lamp sulfur method for kerosenes described below, several important factors had to be considered.

Purification of the Air Used. The present A. S. T. M. procedure gives no recognition of the fact which has been stressed by many investigators, that the condition of the air in the laboratory which is used for the burning process has an important bearing on the results. It is true that a blank determination using alcohol is prescribed, but this is indefinite, in that the air used is not measured and frequently the blank obtained is too great to allow results to be determined accurately on highly refined kerosenes. To overcome this difficulty, all the air supplied to the flame in the modified method was purified by passing through a Davis canister for organic vapors and acid gases, which complies with Bureau of Mines Code OC-4 and contains soda lime and activated charcoal. Other equipment was tried but did not prove so practical or efficient. The use of purified air, as shown in Table I, definitely established that determinations made even in the best atmosphere are subject to appreciable error.

These results were obtained by burning one sample of kerosene on 4 successive days in a room in which the atmosphere was believed to be uncontaminated by sulfur compounds; appreciable differences are to be noted.

It may be of interest in this connection to note the magnitude of error produced by a small amount of carbon tetrachloride vapor in the air. It has been customary in this laboratory to run a standard consisting of duplicate samples of a kerosene which normally runs 0.010 per cent sulfur by the A. S. T. M. method. One day a small amount of carbon tetrachloride was spilled from a fire extinguisher in the room

Table I. A. S. T. M. Method

Laboratory Air %	Purified Air %
0.0113	0.0096
0.0097	0.0082
0.0121	0.0089
0.0084	0.0088

where sulfurs are burned. The blanks showed approximately 0.04 per cent "sulfur" on that particular day. To make sure that the carbon tetrachloride was the cause of the discrepancy, a small amount of it was purposely sprayed on the floor on another day with similar effects.

Size of Sample, Lamp, and Chimney. When determining sulfur on highly refined kerosenes, it is necessary to burn at least 20 grams of sample, preferably within a period of 6 to 8 hours. This is difficult with the present A. S. T. M. equipment, for the prescribed lamp, wick, and flame are too small. It was necessary therefore to develop a new lamp containing a larger wick, and after many trials two wicks burning in two glass wick tubes inserted through the same cork were decided upon, a wide-mouthed extraction flask of 150-ml.

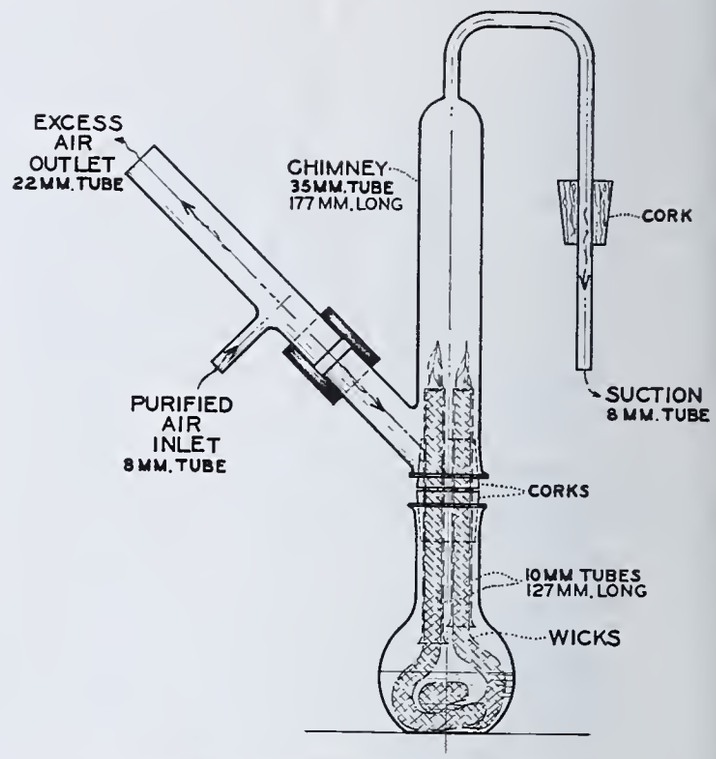

Figure 1. Chimney-Lamp Assembly

capacity being used as the sample container. This equipment necessitated the use of a larger chimney of modified design as shown in Figure 1 to accommodate the larger cork holding the wick tubes, and to allow entrance of purified air. The extra heat generated by the two larger flames, even using humidified air, tends to evaporate the absorbing medium over a period of 6 to 8 hours' burning. It was therefore necessary to immerse the first absorber in a water bath which was kept cool with a small amount of ice; the second absorber which is also required need not be cooled.

Absorbing Medium. After investigating the comparative merits of sodium carbonate and hydrogen peroxide as absorbing media for sulfur trioxide, it was decided to use the latter reagent in both absorbers. It was found to give complete oxidation and absorption of the sulfuric oxides produced, thus avoiding the use of bromine, and it introduces less silica into the absorbent by contact with the glass over the burning period, than when sodium carbonate is used. However, only the highest grade of hydrogen peroxide must be employed and a blank determination must be made.

Volumetric *vs.* Gravimetric Determination of Sulfur after Burning. The present A. S. T. M. procedure uses volumetric means for determination of the sulfur in the used absorbent. This is reproducible in itself, but on determining sulfur as barium sulfate by microgravimetric means on the same used absorbent, it was found that only a portion of the so-called "sulfur" calculated from the titration is actually sulfur. By way of illustration, one sample of highly refined kerosene gave 0.0077 per cent "sulfur" by titration and only 0.00167 per cent sulfur by microgravimetric determination. The titration in this case was 3.17 ml. of 0.0624 N sodium hydroxide, 41.3 grams of sample being burned. This gravimetric figure of 0.00167 per cent accounts for only 0.69 ml. of the 3.17-ml. titration, leaving 2.48 ml. or 78 per cent of the titration not accounted for. Tests indicate that nitrates are present in considerable proportion, and it is believed that various aliphatic or unsaturated acids are present. In view of these findings, it was essential to resort to microgravimetric means for determining the total sulfur.

Determination of Sulfate. Experiments were made with sodium rhodizonate as an indicator for barium. It was

not found sufficiently sensitive for use with such small quantities of sulfate as were present in used solutions.

Further experiments were then made by adding an excess of sodium sulfate and evaporating the solution to dryness. All the sulfate was thus converted to bisulfate and the volatile acids (such as nitric acid) should be driven off. However, nitric acid was only slightly volatilized under these conditions, even when the residue was heated at 105° C. for half an hour.

Sources of Error. The possibility that sulfur trioxide mist might be incompletely absorbed by the aqueous hydrogen peroxide solutions was considered. A sintered-glass filter disk was placed behind the second absorber; after 7 hours' absorption, no acidity to methyl orange was detectable, which indicated that complete adsorption had taken place.

Some investigators have reported that some sulfur compounds are preferentially adsorbed by a cotton wick. This possibility was studied by burning four samples with cotton and then with glass-wool wicks, the following results being obtained:

Sample	Sulfur: Cotton wick	Sulfur: Glass-wool wick
	P. p. m.	*P. p. m.*
1	16.7	18.6
2	15.0	16.7
3	32.9	38.0
4	196.0	193.0

In most cases the glass wool gave slightly higher results, but the difference is probably within experimental error.

In order to check the modified method on a sample of known sulfur content, a highly refined kerosene of 4.5 parts per million total sulfur was blended with *n*-butyl sulfide (Eastman Kodak Company) to produce a sample of 14.9 parts per million total sulfur. Duplicate results on this sample by the modified method were 15.2 and 14.0 p. p. m., which is considered satisfactory accuracy. Espach and Blade (*4*) found that the sulfur in all the compounds which they tested was completely burned if present in amounts not more than 0.10 per cent or 1000 p. p. m.

Table II. Comparative Data

(A. S. T. M. and modified lamp sulfur methods)

Sample	Treatment	A. S. T. M. Method D90-34T	Modified Method Volumetric	Modified Method Gravimetric	
		%	%	%	*P. p. m.*
A	SO_2-treated distillate	0.040	0.0360	0.0335	335.0
A-16	0.16 # 15 F[a]	0.014	0.0085	0.00326	32.6
		0.013	0.0088	0.00355	35.5
A-20	0.20 # 15 F	0.014	0.0080	0.00315	31.5
		0.013	0.0087	0.00329	32.9
A-24	0.24 # 15 F	0.013	0.0080	0.00280	28.0
		0.011	0.0087	0.00273	27.3
A-30	0.30 # 15 F	0.012	0.0073	0.00270	27.0
		0.010	0.0077	0.00245	24.5
B	SO_2-treated distillate	0.026	0.0230	0.0197	197.0
B-20	0.20 # 15 F	0.012	0.0070	0.00167	16.7
		0.014	0.0095	0.00186	18.6
B-25	0.25 # 15 F	0.012	0.0067	0.00165	16.5
		0.010	0.0077	0.00150	15.0
B-35	0.35 # 15 F	0.012	0.0066	0.00170	17.0
		0.014	0.0070	0.00152	15.2
B-45	0.45 # 15 F	0.012	0.0065	0.00128	12.8
		0.015	0.0066	0.00128	12.8
C	SO_2-treated distillate	0.025	0.0176	0.0139	139.0
C-16	0.16 # 15 F	0.012	0.0066	0.00166	16.6
		0.011	0.0076	0.00157	15.7
C-20	0.20 # 15 F	0.012	0.0071	0.00143	14.3
		0.015	0.0064	0.00147	14.7
C-25	0.25 # 15 F	0.013	0.0078	0.00180	18.0
		0.012	0.0072	0.00130	13.0
C-35	0.35 # 15 F	0.013	0.0072	0.00160	16.0
		0.012	0.0067	0.00160	16.0
D	SO_2-treated distillate	0.023	0.0181	0.0125	125.0
D-20	0.20 # 15 F	0.013	0.0068	0.00170	17.0
		0.014	0.0065	0.00163	16.3
D-25	0.25 # 15 F	0.014	0.0077	0.00190	19.0
		0.012	0.0069	0.00160	16.0
D-35	0.35 # 15 F	0.013	0.0074	0.00160	16.0
		0.012	0.0072	0.00150	15.0
D-45	0.45 # 15 F	0.012	0.0065	0.00120	12.0
		0.010	0.0062	0.00132	13.2
E-1	Before distilling	0.010	0.0062	0.00091	9.1
		0.011	0.0063	0.00091	9.1
E-2	After distilling	0.013	0.0058	0.00045	4.5
		0.010	0.0061	0.00045	4.5

[a] Fuming sulfuric acid, 15% SO_3.

Experimental Results

The data in Table II have been obtained on four sulfur dioxide–treated kerosene distillates, each of which was submitted to increased acid treatment as indicated. Samples E-1 and E-2 represent a highly refined kerosene before and after distilling. The volumetric figures are those obtained by titration of the used absorbent before a gravimetric determination was made.

Discussion

Inspection of the foregoing data indicates that the gravimetric results are reproducible to a satisfactory degree, considering the small amounts of actual sulfur being determined. Differences between stocks are made apparent which are not disclosed by the A. S. T. M. procedure. In general the smaller the sulfur content the greater is the discrepancy between volumetric and gravimetric determinations.

When testing samples such as distillates and poorly-refined kerosenes which contain larger amounts of sulfur, it is not necessary to burn as large a sample as specified in the modified method.

The procedure for precipitation and ignition of barium sulfate is adapted from that described by Pregl (*6*).

Apparatus

Burner. The fount is a 150-ml. wide-mouthed extraction flask. Two 2.5-cm. (1-inch) flat cotton wicks are rolled lengthwise and pulled by means of a wire through two Pyrex tubes, 10 mm. outside diameter, standard wall, 127 mm. long, flared at the bottom. The tubes pass through two corks, the lower one of which fits the neck of the flask, the upper one fitting into the chimney.

Chimney. A Pyrex glass tube 35 mm. outside diameter, 177 mm. long. At the top it narrows down to an 8-mm. tube which in the shape of an inverted "U" makes the connection with the first absorber. A side tube about 22 mm. outside diameter, 50 mm. long, is attached to the chimney as near to the bottom as possible, pointing upward at an angle of 45°. Another tube of the same diameter, about 100 mm. long, is attached by 0.19-cm. (0.75-inch) rubber tubing to the side tube, as an extension of the latter. A tube 8 mm. outside diameter, 30 mm. long, is sealed perpendicularly into this extension tube at a point 30 mm. from its lower end.

Absorber. Two regular A. S. T. M. sulfur absorbers with spray traps are used in series connected by glass and rubber tubing, the rubber connections being made as short as possible. Rubber stoppers are used, except for the connection between the chimney and the first absorber which is made with a cork. The large chambers of the absorbers are filled with "resistant glass" rods about 10 mm. long.

Air Purifier. The air supply to the burner is taken from the compressed air line and is purified by passage through a plug of cotton and a 2000-ml. Davis canister for use in organic vapors and acid gases. It is then passed through a humidifier consisting of a sulfur absorber containing distilled water, then through a spray trap, and finally into the side tube of the chimney.

Other requisites are: a flowmeter to indicate rate of passage of air through the absorbers; a glass jar, approximately 12 cm. in diameter, 23 cm. high, for cooling bath for first absorber; vacuum line, balance and weights accurate to 0.05 mg. at 2-gram load, and balance, accurate to 0.1 gram at 200-gram load. Neubauer microcrucibles of porcelain, with integral porous bottom; a filter flask of 125-ml. capacity with rubber tube, pinchcock for suction by mouth; glass and rubber tubing collar for holding Neubauer microcrucible; platinum crucible cover, wire triangle, gas burner, small crucible tongs; small wash bottles to deliver fine streams of 0.03 *N* hydrochloric acid and 95 per cent alcohol, respectively. Graduated pipets, 5 and 1 ml.; stirring rods, 4 by 120 mm.; rubber policeman to fit 4-mm. stirring rods; beakers, graduated cylinders, and funnels. A wire hook to adjust height of wicks, made from a piece of stiff wire such as a paper clip. The end is filed to a flat point and bent at right angles about 3 mm. from the point to make a hook.

Reagents

Merck's reagent Superoxol, approximately 30 per cent H_2O_2; sodium hydroxide or sodium carbonate solution, approximately 0.06 *N;* barium chloride solution, approximately 0.06 *N;* nitric acid solution, approximately 0.06 *N;* hydrochloric acid, approximately 0.03 *N;* sulfuric acid, concentrated; standard sulfuric acid solution, 0.0624 + 0.0002 *N;* alcohol, pure, 95 per cent; methyl orange indicator, 1 gram per liter of water.

Procedure

Place in the fount about 75 to 100 ml. of the kerosene to be tested. Use new wicks and tamp the tops of the wicks lightly with the wire hook so that the surfaces are flat and dense, and are depressed about 2 or 3 mm. below the tops of the glass tubes. Weigh the assembled burner, and charge each absorber with 1 ml. of reagent Superoxol and about 25 ml. of distilled water. Place the first absorber in the cooling bath, connect the absorbers with one another, and connect the chimney to the first absorber and the second absorber to the vacuum line. Connect the spray trap of the air humidifier to the small tube which is sealed into the extension of the side tube of the chimney.

Start the air blowing through the air purifier and start the suction through the absorbers. Immediately light the burner with a gas flame and place it in the chimney so that the tops of the wicks are slightly above the point where the side tube enters the chimney. The bottom of the chimney must be tightly closed by the cork fitting around the wick tubes. Adjust the suction so that the flames do not smoke; if necessary, tamp the wicks with the wire hook to reduce the height of the flame or pull the wicks up with the hook to increase the height of the flame. Adjust the amount of air passing through the purifier so that a slight excess escapes through the extension of the side arm of the chimney; this can be tested by stopping the opening momentarily with the finger. If an excess of air is escaping, the flames will be depressed, and if the amount of purified air is insufficient the flames will be elongated. Add ice to the cooling bath when necessary to keep the solution from evaporating in the first absorber, and replenish the water in the air humidifier when necessary.

After 6 to 8 hours' burning weigh the burner, rinse the spray traps into the absorbers, and transfer the solutions from the absorbers to a 250-ml. beaker. Neutralize the solution to methyl orange with 0.06 *N* sodium hydroxide or sodium carbonate, then make definitely acid with about 10 ml. of 0.03 *N* hydrochloric acid, cover with a ribbed watch glass, and evaporate to dryness on an asbestos-covered hot plate at a temperature which will just boil the liquid (or dispense with the watch glass and hasten the evaporation by blowing gently with purified air). Allow the residue to bake for 5 to 10 minutes on the hot plate to dehydrate the silica, and then digest for 5 minutes with a little water acidified with hydrochloric acid. Filter through a 7-cm. No. 42 Whatman paper into a 100-ml. beaker, washing the 250-ml. beaker four times with small portions of hot acidified water, then washing the filter three times. Heat approximately to boiling and add slowly with stirring 5 ml. of 0.06 *N* barium chloride (if more than 2 mg. of sulfur is expected use more barium chloride). Cover and boil gently until the volume is about 10 ml.

After at least 1 hour of digestion decant the liquid through an ignited and weighed Neubauer microcrucible, suction for the filtration being produced by the mouth and maintained by the pinchcock on the suction tube. Rinse the sides of the beaker with a fine stream (1 or 2 ml.) of 0.03 *N* hydrochloric acid. Stir the precipitate with a policeman and pour the mixture down the policeman into the crucible. Rub the sides of the beaker with the policeman, rinse, and transfer to the crucible, repeating until the precipitate appears to be completely transferred to the crucible. (Do not let the tip of policeman touch the surface of the liquid in the crucible, as the precipitate will run by capillarity up the stirring rod.) Now rinse the sides of the beaker with 1 or 2 ml. of alcohol; a few particles of precipitate will probably collect on the surface of the alcohol, for alcohol apparently does not wet barium sulfate. Transfer the alcohol to the crucible, repeat the rinsing with 0.03 *N* hydrochloric acid and then with alcohol until no appreciable amount of precipitate is seen on the surface of the alcohol. Then wash the precipitate in the crucible four times with 0.03 *N* hydrochloric acid, dry the outside of the crucible with filter paper, and set it on a platinum crucible cover supported on a wire triangle. Heat gently with a gas burner until the moisture has evaporated, then heat until the bottom of the crucible is red and any organic matter is completely burned off. Allow the crucible partly to cool on the platinum cover, then place it on a flat piece of porcelain such as an inverted spot plate. After cooling at least 10 minutes weigh accurately (estimating to 0.01 mg.).

Standards. With each group of samples, one or more standards should be run containing the same amount of sulfuric acid as is expected in the samples. Each standard is made up from the 0.0624 *N* sulfuric acid (containing 1 mg. of sulfur per ml.), 2 ml. of Superoxol, and the same amount of alkali and water as was used for the samples. The standard is just neutralized to methyl orange by addition of 0.06 *N* nitric acid. It is then made definitely acid with hydrochloric acid and carried through the same procedure as the samples.

Calculations. Convert the milligrams of barium sulfate to milligrams of sulfur by multiplying by 0.1373. Subtract the milligrams of sulfur actually present in the standard from the amount found and subtract this correction from the milligrams of sulfur found in the sample.

$$\frac{\text{Corrected weight of sulfur in mg.}}{\text{Weight of sample burned in grams}} \times 1000 = \text{parts per million of sulfur}$$

Note on Cleaning Neubauer Microcrucibles. The precipitate is removed by filling the crucibles with water and swabbing them with a rubber policeman. After rinsing thoroughly with distilled water, they are dried on filter paper and ignited to redness on the platinum cover before weighing. Occasionally it may be necessary to dissolve out the barium sulfate by passing some concentrated sulfuric acid through the crucibles. The pores should then be filled up by filtering some freshly precipitated barium sulfate on the crucibles before they are again used for a determination.

Literature Cited

(1) Charlesworth, S. I., Harris, A. W., and Linder, C. P., U. S. Patent 1,892,329 (1932).
(2) Edgar, G., and Calingaert, G., Ind. Eng. Chem., Anal. Ed., 2, 104 (1930).
(3) Engler-Heuser, *Z. angew. Chem.*, 1895, 285.
(4) Espach, R. H., and Blade, O. C., *Bur. Mines Tech. Paper* 513 (1931).
(5) Inst. Petroleum Tech., "Standard Methods for Testing Petroleum and Its Products," 3rd ed., Serial Designation G-4, p. 147, London, 1935.
(6) Pregl, F., "Quantitative Organic Microanalysis," 2nd English ed., pp. 139–46 (1930).
(7) Richardson, A. W., English Patent 211,925 (1924).

Received September 23, 1937.

Courtesy, A. C. Shead

Etch Figures on a Single Microcrystal of $Ag_2Cr_2O_7$

ANALYTICAL EDITION

INDUSTRIAL and ENGINEERING CHEMISTRY

Harrison E. Howe, Editor

Titration of Fluorine in Aqueous Solutions

R. J. ROWLEY AND H. V. CHURCHILL
Aluminum Company of America, New Kensington, Pa.

Fluorine may be titrated quantitatively with thorium nitrate (0.1 *N*) in an aqueous solution, instead of the 48 per cent ethyl alcohol solution recommended by Willard and Winter (*4*), by closely controlling the pH of the solution to be titrated. A pH of from 2.9 to 3.1 was found to be suitable, and is obtained by the use of monochloroacetic acid, half neutralized by sodium hydroxide. The end point is more definite in an aqueous solution than in a 48 per cent ethyl alcohol solution. When using a 48 per cent alcoholic solution and 0.1 *N* thorium nitrate, a fluorine content of approximately 20 mg. can be titrated to a fairly definite end point; if a greater amount of fluorine is present, the end point is indefinite. However, in an aqueous solution (using 0.1 *N* thorium nitrate) as much as 50 mg. of fluorine may be titrated to a definite end point.

WILLARD and Winter's volumetric method (*4*) for determination of fluorine consists of the titration of soluble fluorides or silico fluorides in a 48 per cent ethyl alcohol solution with a standard thorium nitrate solution, using zirconium nitrate–sodium alizarin sulfonate as an indicator. In their original article, Willard and Winter stated, "Since thorium fluoride is quite insoluble in a solution containing ethyl alcohol, an attempt was made to titrate fluoride solutions containing an equal volume of ethyl alcohol with standard thorium nitrate, using the zirconium-alizarin mixture to determine the point at which all of the fluorine was precipitated. The results with pure fluoride solutions were good." Armstrong (*1*) modified the method by eliminating the use of zirconium nitrate in the indicator, since thorium itself forms a pink lake with sodium alizarin sulfonate in acid solutions. He later found (*2*) that in determining very small amounts of fluorine in biological materials, an aqueous, rather than an alcoholic solution gave better results. If thorium fluoride so behaves in aqueous solutions that a satisfactory titration can be made when the amount present is only 0.001 mg., a titration of larger amounts of fluorine in aqueous solutions should be satisfactory.

This matter has been investigated. The effect of acid concentration (determined by pH measurements) was first studied.

A standard sodium fluoride solution containing 1 mg. of fluorine per cc. was made up and standardized by titration in a 48 per cent ethyl alcohol solution. Titrations were then made on aqueous solutions having a pH ranging from approximately 1.0 to 5.0. These values were obtained by adding standard *N* or 0.1 *N* hydrochloric acid solution in the correct amount to give the desired pH. All solutions were titrated in a volume of 100 cc., using 8 drops of 0.05 per cent aqueous sodium alizarin sulfonate as an indicator. After the titration had been made, the pH of the solution was determined with the glass electrode, using the Beckmann pH meter. The end points observed were as given in the following tables. The thorium nitrate used had a normality of 0.092, 1 cc. being equal to 0.00175 gram of fluorine.

TABLE I. EFFECT OF ACIDITY OF AQUEOUS SOLUTION

Volume	HCl Added		pH[a]	F Added	Titration	F Found	End Point
Cc.	*Cc.*			*Gram*	*Cc.*	*Gram*	
100	10	(*N*)	1.1	0.0100	?	?	Indistinct
100	1	(*N*)	2.1	0.0100	6.9	0.01208	Indistinct
100	0.1	(*N*)	3.15	0.0100	5.8	0.01015	Good
100	10	(0.1 *N*)	1.9	0.0100	7.9	0.01383	Indistinct
100	1	(0.1 *N*)	2.9	0.0100	5.8	0.01015	Good
100	0.5	(0.1 *N*)	3.4	0.0100	5.7	0.00998	Good[b]
100	0.25	(0.1 *N*)	4.1	0.0100	5.0	0.00875	Indistinct
100	0.10	(0.1 *N*)	4.7	0.0100	4.4	0.00770	Indistinct

[a] pH values were obtained after titration was completed.
[b] The end point obtained at this pH, while very good, is similar to that obtained when titrating in 48 per cent ethyl alcohol solution at approximately the same pH. The flashes of pink observed disappear upon stirring, although finally a distinct and permanent pink end point will be reached.

Table I shows that a pH of approximately 3.0 gives the most positive end point, and that a pH of 2.9 to 3.4 gives results which are stoichiometrically correct. Hoskins and Ferris (*3*) stated that monochloroacetic acid gives a pH of 2.8 in water and a pH of 3.5 in a 48 per cent ethyl alcohol solution, and they recommended that this buffer be used at half neutralization—i. e., at maximum buffering power. In this laboratory the authors had been using this buffer with satisfactory results. They have, however, found it convenient to make up the buffer in a single solution, somewhat more concentrated than that previously recommended, by dissolving 9.448 grams of monochloroacetic acid and 2.000 grams of sodium hydroxide in 100 cc. of water.

Varying amounts of this buffer were added to 100 cc. of water, and the pH was determined. Results obtained were as follows:

Volume	Buffer	pH	Volume	Buffer	pH
Cc.	*Cc.*		*Cc.*	*Cc.*	
100	0.1	3.6	100	1.0	3.1
100	0.5	3.2	100	2.0	3.0

To determine the effect of varying amounts of buffer in the fluoride solutions, 10-cc. aliquots of the standard sodium fluoride solution (containing 1 mg. of fluorine per cc.) were made up to a volume of 100 cc. and titrated as before. After the solutions had been titrated the pH was determined.

Table II. Effect of Varying Amounts of Buffer per 100 Cc.

Buffer Added	pH	F Added	Titration	F Found	End Point
Cc.		*Gram*	*Cc.*	*Gram*	
0.1	3.6	0.0100	5.6	0.0098	Fading
0.5	3.2	0.0100	5.75	0.01006	Good
1.0	3.1	0.0100	5.75	0.01006	Good
2.0	3.0	0.0100	5.75	0.01006	Good

The effect of varying amounts of fluorine was next studied to determine if the equivalence of the thorium nitrate solution is exact throughout the range of 1 to 50 mg. of fluorine. Varying amounts of the standard sodium fluoride solutions were made up to volumes of 50 and 100 cc., 1 cc. of the buffer solution and 4 or 8 drops of sodium alizarin sulfonate were added, and the solutions were titrated with 0.092 N thorium nitrate. After titration, the pH of each solution was determined. The end point was good in all cases.

Table III. Effect of Varying Amounts of Fluorine

Volume	pH	F Added	Titration	F Found
Cc.		*Gram*	*Cc.*	*Gram*
100	3.1	0.0010	0.6	0.00105
100	3.1	0.0050	2.9	0.00508
100	3.1	0.0100	5.75	0.01006
100	3.1	0.0200	11.6	0.02030
100	3.1	0.0250	14.0	0.02450
100	3.0	0.0500	28.5	0.04988
50	3.0	0.0010	0.6	0.00105
50	3.0	0.0050	2.9	0.00508
50	3.0	0.0100	5.75	0.01006
50	3.0	0.0200	11.5	0.02013

It is evident from Table III that the equivalence of the thorium nitrate is uniform throughout the range, and that 1 to 50 mg. of fluorine may be quantitatively determined by titration with thorium (0.1 N) in an aqueous solution, thereby saving the expense of using ethyl alcohol. The authors also attain greater accuracy because the end point is more definite in the aqueous solution. Three analysts, who had had little, if any, experience with the method, had no trouble in observing the correct end point in the aqueous solutions, although they experienced considerable difficulty when they tried titrating the alcoholic solutions.

It also appears that a larger amount of fluorine may be satisfactorily titrated in an aqueous than in an alcoholic medium.

In titrations of very small amounts of fluorine, when using 0.01 N instead of 0.1 N thorium nitrate, the titration is very sensitive with respect to the pH of the solution. Apparently there is some optimum pH for this titration of smaller amounts of fluorine in an aqueous solution that has not yet been definitely established. Further work is being done on this phase of the problem.

The method now recommended for the titration of fluorine when using 0.1 N thorium nitrate is as follows:

Prepare the buffer by dissolving 9.448 grams of monochloroacetic acid and 2.000 grams of sodium hydroxide in 100 cc. of water.

Take an aliquot of 50 or 100 cc., depending upon the amount of fluorine present. If 50 cc. are taken, dilute to 100 cc. with water. Add 8 drops of sodium alizarin sulfonate indicator. Adjust the acidity back and forth with 2 per cent sodium hydroxide and 1 to 200 hydrochloric acid, finally leaving the solution just acid and the pink color discharged. Add 1 cc. of the buffer solution and titrate with 0.1 N thorium nitrate to a permanent pink. A blank determination should be made.

Standardize the thorium nitrate by titration of the fluorine obtained by distillation of 100 per cent natural cryolite, fluorspar, or sodium fluoride.

The authors' method of titration in aqueous solution is applicable to the titration of fluorine when interfering substances are not present—for example, they have applied it with satisfactory results to the determination of fluorine in lithium fluoride and in sodium fluoride, without previous separation of the fluorine by distillation. The aqueous method has also been used successfully on many types of food.

Literature Cited

(1) Armstrong, W. D., Ind. Eng. Chem., Anal. Ed., 8, 384–7 (1936).
(2) Armstrong, W. D., *J. Am. Chem. Soc.*, 55, 1741–2 (1933).
(3) Hoskins and Ferris, Ind. Eng. Chem., Anal. Ed., 8, 6–9 (1936).
(4) Willard and Winter, *Ibid.*, 5, 7–10 (1933).

Received September 23, 1937.

The T-50 Test Applied to Zinc Oxide Compounds

GEORGE S. HASLAM AND CLARENCE A. KLAMAN
Research Division, The New Jersey Zinc Company, Palmerton, Pa.

The authors have adapted the T-50 test, as described by Gibbons, Gerke, and Tingey (*1*) in 1933, to a study of the curing rate of zinc oxides in rubber compounds. A new method of expressing results obtained in this test is used which condenses the data and renders comparisons relatively easy. The major variables in zinc oxide, particle size and chemical purity, have been studied with several accelerators and conclusions drawn as to the effectiveness of these variations in zinc oxide on curing rate in both gum stocks and loaded stocks.

Data on the reproducibility of the test and the effect of the freezing temperature and of shelf aging are also given.

THE function of zinc oxide in the vulcanization reaction and the effect of various modifications of zinc oxide on the curing rate of rubber compounds have received considerable attention. In the past few years, the development of a number of new grades of zinc oxide, having a wide range of chemical and physical properties, has served to increase the interest in this pigment and in methods of evaluating the effect of these several modifications in the laboratory.

Several methods of attack have been applied to studies of the effect of zinc oxide on the curing rate of rubber, ranging from the analytical determination of free and combined sulfur, through the conventional physical tests, to actual performance evaluation. This latter method is obviously the most satisfactory but is also the most costly and time-consuming. The use of physical measurements, such as stress-strain properties, has been the most widely used method of evaluating compounds, the principal objections being the inherent inaccuracies of rubber testing and the

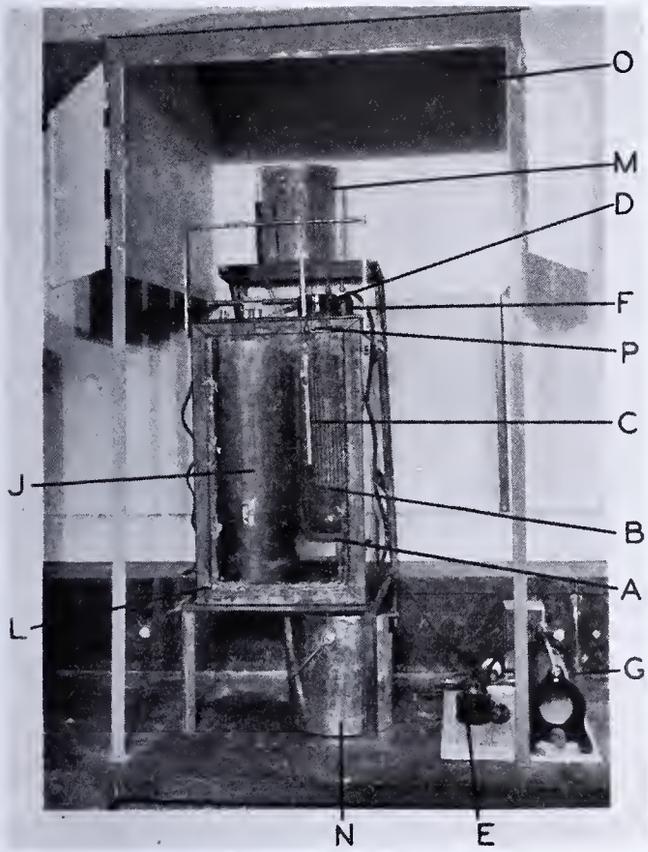

FIGURE 1. GENERAL ASSEMBLY OF APPARATUS

A. Testing Dewar flask
B. Specimen rack
C. Thermometer
D. Stirrer
E. Stirrer speed contro
F. Heater
G. Rheostat for heater
J Insulated cooling tank
L. Glass-windowed tank
M. Acetone reservoir
N. Acetone overflow
O. Ventilated hood
P. Weights

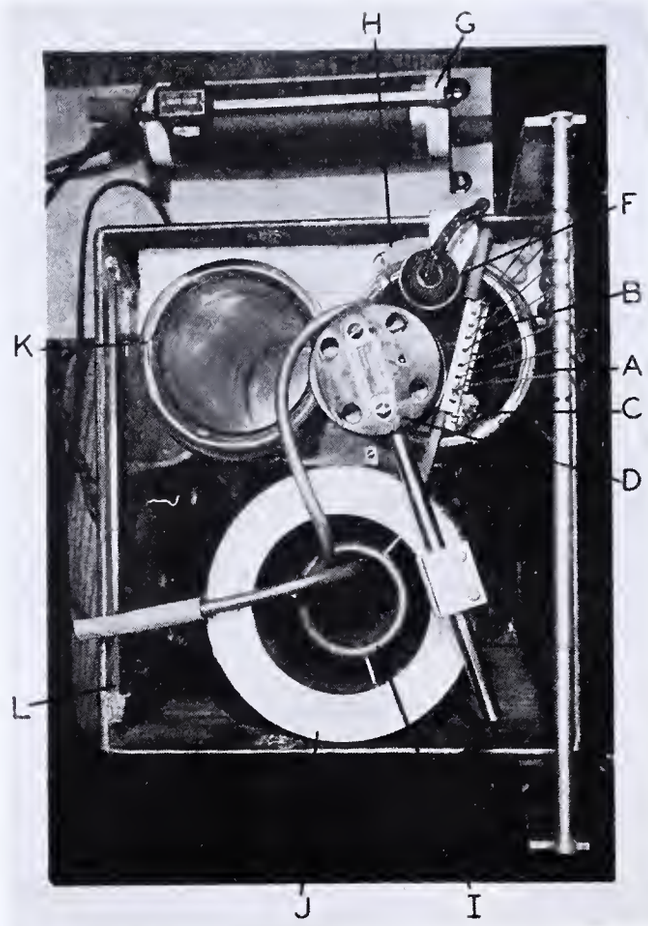

FIGURE 2. TOP VIEW OF APPARATUS

A. Testing Dewar flask
B. Specimen rack
C. Thermometer
D. Stirrer
F. Heater
G. Rheostat for heater
H. Siphon overflow
I. Copper cooling coil
J. Insulated cooling flask
K. Conditioning Dewar flask
L. Glass-windowed tank

failure to differentiate between "state of cure" and the actual reinforcing value of the pigment.

In 1933, Gibbons, Gerke, and Tingey (*1*) published a discussion of a test method which they called the T-50 test. Since that time relatively little has been published, although it is known that the test is being used in a number of laboratories in a routine way. Inasmuch as this test is particularly sensitive to state of cure, following, in a general way at least, the combined sulfur analysis, it is obviously of real interest in studies of any factors affecting the curing rate. In this paper, the authors report their efforts to apply the T-50 test to a study of the effect of zinc oxide and zinc oxide variables on the curing rate of rubber compounds.

Discussion of Test Method

Briefly, the T-50 test consists of stretching a 1.5 by 0.075 inch strip of rubber to a predetermined elongation (500 per cent was used in all the tests reported in this paper); while in the extended position, the specimen is frozen at −70° C. in acetone, the temperature of which has been reduced by passing it through a coil immersed in solid carbon dioxide and acetone. The holder is released while the rubber is frozen, the acetone bath is allowed to heat up, and the temperature at which the rubber regains its elastic properties is observed. The temperature at which the rubber has retracted to 50 per cent of its original elongation is known as the T-50.

The apparatus used is essentially the same as that described by the above-mentioned investigators and is shown in Figures 1 and 2. Figure 3 shows the redesigned specimen clamp, which, by eliminating the necessity for screwing the test piece in place increases the ease and speed with which

FIGURE 3. CLOSE-UP OF SPECIMEN HOLDER

the holder is loaded. An induction motor stirrer was substituted for the remote-driven stirrer of the original apparatus.

In order to obtain a satisfactory value to express curing rate, an extensive study of the time of cure versus T-50 curve was made. In all cases a compound having a T-50 of −7° C. was a satisfactorily cured stock. In order to condense the data and to use a single value for the expression of rate of cure, it was decided to express the results in terms of the time of cure in minutes to give a T-50 of −7° C. This value was obtained by plotting the T-50 for a range of cures, drawing a smooth curve through these points, and interpolating the time at −7° C.

This value should not be interpreted as the optimum cure, but rather as the length of time required for a specified stock to reach a definite state of cure. By this means, the curve of time of cure versus T-50 is reduced to a single value, the accuracy of which is greater by virtue of the fact that it is essentially an average of 6 determinations rather than one. Physical tests and performance evaluation will still have to be used to establish the optimum for each different compound.

Table I. Effect of Freezing Temperature

(Compound 4, Z. M. L.)

	Cure at 30 lb. *Min.*	−70° C. 1st test	−70° C. 2nd test	−70° C. Av.	−50° C. 1st test	−50° C. 2nd test	−50° C. Av.
Compound containing 5 parts zinc oxide *A*	15	+ 2.0	+ 1.0	+ 1.5	+ 2.5	[a]	+ 2.5
	30	−10.5	−11.5	−11.0	−11.5	−11.5	−11.5
	45	−20.0	−18.5	−19.6	−21.0	−20.0	−20.5
	60	−26.5	−25.0	−25.8	−26.5	−25.0	−25.8
	90	−35.0	−31.0	−33.0	−33.0	−30.5	−31.8
	120	−40.0	−33.5	−36.8	−35.5	−33.5	−34.5
Time to T-50 of −7° C.		26.0	25.5	26.0	26.0	26.0	26.0
Compound containing 200 parts zinc oxide *A*	15	+ 9.0	+ 8.5	+ 8.8	+ 9.0	+ 9.5	+ 9.3
	30	+ 1.5	+ 0.5	+ 1.0	0	+ 2.0	+ 1.0
	45	− 7.0	− 7.5	− 7.3	− 7.0	− 7.0	− 7.0
	60	−12.5	−12.5	−12.5	−12.0	−12.0	−12.0
	90	−20.0	−19.0	−19.5	−19.5	−19.5	−19.5
	120	−23.0	−22.0	−22.5	−22.0	−21.5	−21.8
Time to T-50 of −7° C.		45	44	44.5	45	45	45

[a] Unhook.

Some difficulty was encountered in reaching and holding a temperature of −70° C., particularly on days when the laboratory temperature was high. As a matter of interest, a series of tests was carried out using freezing temperatures of −70° and −50° C. The data obtained are shown in Table I. As these data indicate that in the present investigation the starting temperature was not particularly important, a compromise was made. In every case the acetone temperature was reduced to at least −65° C., but no effort was made to obtain exactly −70° C. as did the investigators mentioned above.

It was also desirable to determine what effect shelf aging over a period of a week or 10 days might have on the T-50 results. One compound was selected and run in duplicate with 3- or 4-day intervals between determinations. These data are shown in Table II and indicate that the reproducibility between the first and after 14 days is as good as that obtained on any one day. All results herein reported were run on compounds which were cured at least 24 hours before the test and none was held more than a week after curing.

Table II. Reproducibility of Results

(Compound 1: Captax with 50 parts zinc oxide *A*)

Cure	Days of Shelf Aging: 1		3		7		9		15		Av. of 10 Tests
5	+ 9.0	+ 9.5	+11.0	+10.3	+11.0	+10.3	+10.5	+10.3	+ 8.5	+ 7.5	+ 9.8
10	+ 1.0	+ 4.0	+ 6.0	+ 1.5	+ 2.8	+ 3.5	+ 3.0	+ 2.5	+ 2.0	+ 1.0	+ 2.7
15	− 3.5	− 3.0	− 2.0	− 3.5	− 2.5	− 3.3	− 2.5	− 4.0	− 4.3	− 5.2	− 3.4
30	−17.0	−17.0	−17.0	−17.3	−16.3	−17.0	−17.0	−17.5	−16.0	−18.0	−17.0
45	−24.5	−25.5	−26.5	−26.0	−25.5	−25.8	−25.8	−26.0	−25.8	−26.5	−25.8
60	−29.0	−29.0	−31.0	−30.0	−28.5	−32.3	−29.5	−30.0	−28.5	−30.0	−29.8
[a]	16.5	−17.0	19.0	16.5	17.5	17.5	17.0	17.0	18.0	17.0	17.3

[a] Time of cure (minutes) to T-50 of −7° C.

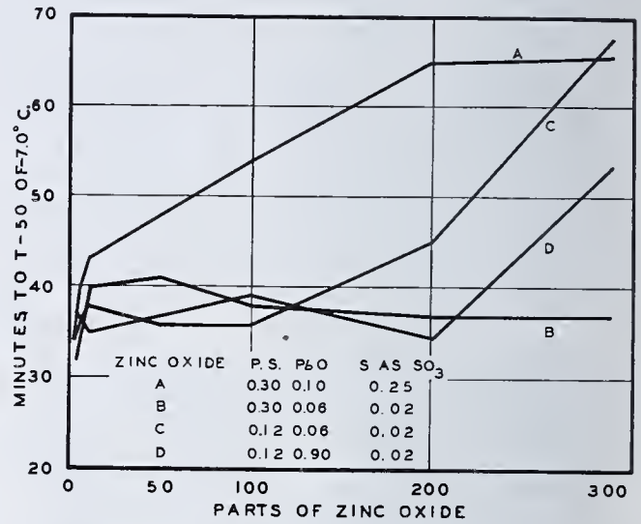

Figure 4. Tests on Compound 1, Captax

Summarizing, all tests were carried out using an initial elongation of 500 per cent, a freezing temperature of less than −65° C., and a shelf-aging period of at least 1 day but not more than 7 days. All results wherever possible are expressed in terms of time of cure in minutes to give a T-50 of −7° C.

Discussion of Results

For this preliminary survey, 4 standard zinc oxides representing modifications of particle size, lead, and sulfur content were chosen. Zinc oxide *A* is a slow-curing oxide and zinc oxide *B* is a fast-curing oxide of essentially the same particle size. Zinc oxides *C* and *D* are oxides of fine particle size, the former being essentially lead-free and the latter containing approximately 1 per cent of lead as the oxide which has an accelerating effect particularly evident with certain accelerators. The particle sizes and chemical analyses of these oxides are given in Table III.

Table III. Properties of Zinc Oxides Used

Zinc Oxide	Particle Size *Microns*	Pb as PbO	S as SO_3
A	0.30	0.10	0.25
B	0.30	0.06	0.02
C	0.12	0.06	0.02
D	0.12	0.90	0.02

The first series of tests was in a compound accelerated with mercaptobenzothiazole (Captax) and having the following base formula, hereafter referred to as compound 1:

Smoked sheet	100
Sulfur	3
Captax	1
Agerite powder	1
Stearic acid	3

The zinc oxide was varied from 2 to 300 parts on 100 parts of rubber. The results, expressed in the time required to reach a T-50 of −7.0° C., are shown in Table IV and Figure 4.

TABLE IV. TESTS ON COMPOUND 1, CAPTAX

Zinc Oxide	Cure at 126° C.	Parts of Zinc Oxide 2	5	10	50	100	200	300
	Min.							
A	15	+ 8.0	+10.5	+10.0	+12.5	+13.0	+13.7	+16.5
	30	− 4.0	− 1.0	+ 0.5	+ 2.0	− 2.5	+ 0.6	+ 1.0
	45	−13.5	−10.0	− 8.0	− 6.0	− 4.5	− 0.7	− 1.7
	60	−20.5	−15.5	−15.0	−12.5	− 8.5	− 5.5	− 4.5
	75	−25.0	−22.5	−20.5	−17.5	−15.0	− 9.3	− 8.8
B	10	+ 8.0	+10.5	+ 9.5	+10.0	+10.0	+13.0	+10.0
	15	+ 4.0	+ 6.5	+ 7.5	+ 7.0	+ 6.0	+ 7.0	+ 7.5
	30	− 7.0	− 4.0	− 2.0	− 2.0	− 3.0	− 3.0	− 2.5
	45	−13.5	−11.0	− 9.5	− 9.0	−10.0	− 9.0	− 8.5
	60	−19.5	−16.0	−15.0	−15.5	−15.5	−16.5	−17.0
	75	−27.0	−25.0	−24.0	−19.5	−19.5	−19.0	−19.5
C	10	+ 9.5	+10.5	..	+ 7.5	+ 8.5	+ 9.5	+11.0
	15	+ 6.5	+ 8.0	+ 6.5	+ 3.5	+ 3.0	+ 6.0	+ 8.0
	30	− 5.5	− 3.0	− 4.0	− 6.0	− 4.0	− 0.5	+ 4.0
	45	−12.0	−11.0	−10.5	−10.0	− 9.5	− 6.5	− 1.5
	60	−18.5	−17.0	−15.5	−14.0	−15.0	− 9.0	− 4.0
	75	−24.0	−22.0	−21.0	−21.5	−19.5	−14.5	− 8.5
D	10	+11.0	+11.0	+ 9.0	+ 7.5	+ 8.0	+ 7.0	+10.5
	15	+ 8.5	+ 6.5	+ 5.0	+ 4.5	+ 5.0	+ 3.5	+ 7.5
	30	− 3.0	− 4.5	− 5.0	− 4.0	− 3.5	− 5.5	+ 0.5
	45	−10.5	−11.5	−11.5	−10.0	− 9.0	−10.0	− 3.0
	60	−17.5	−17.0	−16.0	−14.5	−14.0	−14.5	− 9.0
	75	−22.0	−22.0	−20.5	−19.5	−18.5	−18.0	−12.0
		Time of Cure (Minutes) to T-50 of −7.0° C.						
A		34	39.5	43.0	47.8	54.0	65.0	66.0
B		32	35	40	41	38	37	37
C		34.5	37	38	36	36	45	67.5
D		37.5	36	35	36.5	39	34.5	53.5

TABLE V. TESTS ON COMPOUND 2, 808

Zinc Oxide	Cure at 126° C.	Parts of Zinc Oxide 2	5	10	50	100	200	300
	Min.							
A	10	+10.0	+ 9.5	+ 9.5	+ 8.0	+13.0	+21.0	No cure
	15	+ 8.0	+ 7.5	+ 8.0	+ 7.5	+12.0	+20.5	No cure
	30	+ 2.5	+ 2.0	+ 2.5	+ 4.0	+ 9.0	+17.5	+22.0
	45	− 1.5	− 2.5	− 3.0	+ 0.5	+ 4.5	+16.0	+20.0
	60	− 4.5	− 6.0	− 6.5	− 3.5	+ 2.0	+13.0	+15.5
	75	− 8.0	− 8.5	− 9.5	− 6.0	0	+10.0	+15.0
B	10	+10.0	+10.5	+10.0	+ 9.5	+11.0	+15.5	+13.0
	15	+ 8.0	+ 7.5	+ 9.0	+ 7.0	+ 9.0	+13.5	+11.0
	30	+ 3.5	+ 2.0	+ 2.5	+ 1.0	+ 3.0	+ 5.0	+ 4.0
	45	− 1.5	− 2.0	− 3.5	− 2.5	− 3.0	− 1.0	− 2.5
	60	− 4.5	− 5.5	− 6.0	− 7.0	− 5.5	− 4.0	− 6.0
	75	−10.5	− 9.5	−11.5	−10.0	− 9.5	− 8.5	−10.0
C	10	+10.0	+10.0	+12.0	+ 9.5	+ 8.5	+12.0	+15.0
	15	+ 8.0	+ 7.5	+ 7.5	+ 7.0	+ 6.0	+11.0	+13.0
	30	+ 1.0	+ 2.5	+ 2.0	+ 0.5	0	+ 3.0	+12.0
	45	− 3.5	− 3.0	− 4.0	− 4.5	− 4.0	0	+ 8.5
	60	− 7.0	− 7.5	− 7.0	− 8.0	− 7.5	− 3.0	+ 2.5
	75	−11.0	−11.0	−12.5	−11.5	−10.5	− 5.0	+ 1.0
D	10	+ 9.0	+ 9.5	+ 9.0	+ 9.0	+10.0	+ 7.5	+14.5
	15	+ 7.5	+ 6.5	+ 6.0	+ 4.5	+ 5.5	+ 5.5	+12.5
	30	+ 2.0	0	− 0.5	− 0.5	+ 2.0	0	+ 5.0
	45	− 2.0	− 4.5	− 3.5	− 5.0	− 0.5	− 2.5	+ 2.5
	60	− 7.5	− 8.5	− 8.5	− 7.5	− 3.5	− 4.0	− 0.5
	75	−11.0	−11.5	−11.5	−11.5	− 6.5	− 7.0	− 2.5
		Time of Cure (Minutes) to T-50 of 0° C.						
A		41	36	36	46	75	..	..
B		42	37	39	34	38	45	40
C		34	35	35	32	31	45	79
D		38	30	30	28	38	31	58

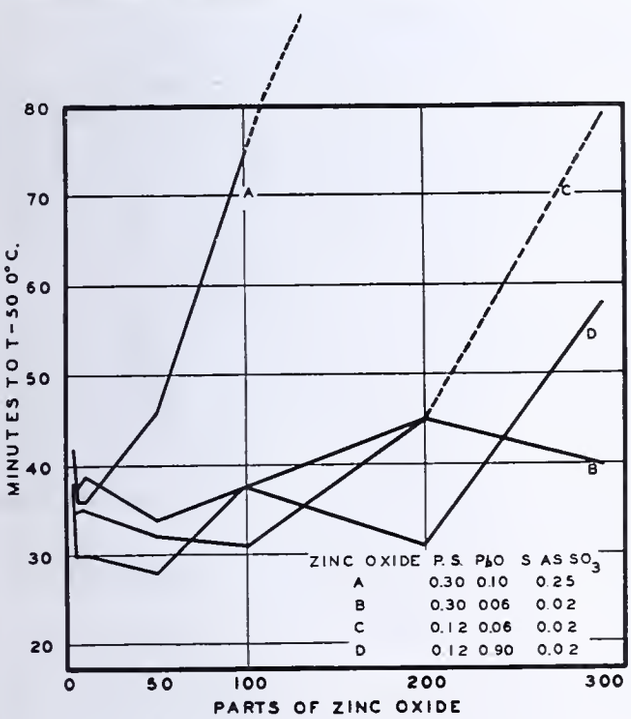

FIGURE 5. TESTS ON COMPOUND 2, 808

Zinc oxide *A*, the "slow-curing" zinc oxide, shows a progressive retardation of cure as the amount of zinc oxide is increased, for with each increase in oxide content the amount of chemical retardant is increased. Zinc oxide *B*, the relatively coarse "fast-curing" zinc oxide, gives a straight-line relation, indicating that when the vulcanization reaction reaches an equilibrium there is no change in curing rate with a change in the zinc oxide loading. Zinc oxide *C*, the fine "fast-curing" oxide, because of its increased surface shows a slightly increased activity and speeding up of the cure to a loading of 50 parts of zinc oxide, at which point the sulfur and accelerator absorption causes an unbalancing of the compound and retardation of cure results. Zinc oxide *D*, fine particle size and containing 1 per cent of lead as the oxide, shows a definite acceleration up to a loading of 200 parts of oxide, at which point the increase in the surface of oxide and the resulting sulfur and accelerator absorption overcome the accelerating effect of the litharge and retardation is observed.

The behavior of zinc oxides and the effect of these variations have been predicted and shown by various investigations, but to show all these changes in a single set of data, with a reasonable reproducibility, adds considerable weight to previous experiments and predictions.

As a further check on the properties of these oxides, three other sets of data were obtained. In Table V and Figure 5, the results with butyraldehyde aniline condensation product (808) are shown.

The base formula hereinafter referred to as compound 2 is as follows:

Smoked sheet	100
Sulfur	3.25
808	0.7
Neozone A	1.0
Stearic acid	1.0

In this case, owing to the selection of a curing temperature which was too low for the compound, it was necessary to make the comparison at a T-50 somewhat higher than was used in the previously discussed tests. The value of 0° C. was selected and the conclusions were essentially the same as were reached in the mercaptobenzothiazole stocks.

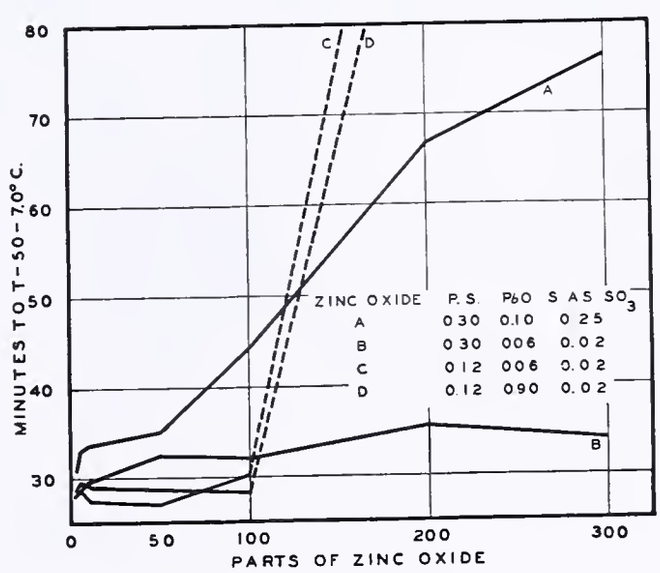

FIGURE 6. TESTS ON COMPOUND 4, UREKA C-GUANTAL

TABLE VI. TESTS ON COMPOUND 3, UREKA C-GUANTAL

Zinc Oxide	Cure at 130° C. Min.	Parts of Zinc Oxide 2	5	10	50	100	200	300
A	15	+ 6.0	+ 7.5	+ 6.5	+ 8.5	+10.0	+14.8	+16.5
	30	− 6.5	− 6.0	− 5.0	− 4.0	− 1.0	+ 4.5	+ 8.5
	45	−14.0	−13.5	−12.0	−11.5	− 6.3	− 1.3	+ 3.0
	60	−18.5	−18.5	−18.5	−16.0	−12.0	− 5.5	− 1.5
	75	−21.5	−22.0	−21.5	−19.5	−14.5	− 9.0	− 6.5
	90	−23.0	−24.0	−24.0	−22.0	−17.0	−11.0	−11.5
B	15	+ 6.0	+ 6.5	+ 5.0	+ 7.0	+ 8.0	+ 8.5	+ 6.5
	30	− 8.5	− 8.0	− 7.5	− 5.5	− 5.5	− 3.5	− 4.5
	45	−15.0	−15.5	−14.5	−13.0	−13.0	−12.0	−12.3
	60	−19.5	−19.5	−19.5	−18.0	−17.5	−18.5	−15.5
	75	−23.0	−23.0	−22.0	−20.5	−21.0	−19.5	−18.5
	90	−24.5	−24.5	−23.5	−23.0	−22.5	−21.5	−22.0
C	15	+ 3.5	+ 3.5	+ 3.0	+ 2.5	− 1.3	+ 8.5	+16.5
	30	− 7.5	− 7.8	− 7.5	− 8.5	− 8.3	+ 5.0	+13.0
	45	−15.5	−15.5	−15.5	−16.0	−12.3	+ 1.0	+10.5
	60	−19.8	−20.0	−20.8	−20.3	−16.0	− 1.0	+ 8.5
	75	−22.0	−23.5	−22.5	−22.0	−17.0	− 2.0	+ 7.5
	90	−23.5	−25.0	−24.3	−23.8	−19.0	− 4.8	+ 6.0
D	15	+ 4.8	+ 5.3	+ 2.0	+ 3.5	+ 1.0	+10.8	+14.5
	30	− 8.0	− 8.5	− 9.0	− 7.3	− 7.8	+ 6.0	+10.5
	45	−14.3	−15.8	−15.8	−14.0	−13.3	+ 1.5	+ 7.0
	60	−19.0	−20.5	−20.5	−18.5	−17.2	− 0.5	+ 3.0
	75	−22.3	−23.3	−22.0	−20.5	−19.3	− 3.0	0
	90	−23.3	−25.5	−23.8	−22.3	−21.0	− 4.3	− 2.3
	Time of Cure (Minutes) to T-50 of −7.0° C.							
A		31	33	33.5	35	44.5	67.0	76.5
B		28	29	29.5	32.5	32.0	35.5	34.0
C		28.5	28.5	27.5	27.0	30.0	..	..
D		28.5	29.5	29	29.0	28.5	..	..

TABLE VII. TESTS ON COMPOUND 4, Z. M. L.

Zinc Oxide	Cure at 135° C. Min.	Parts of Zinc Oxide 2	5	10	50	100	200	300
A	15	+ 3.5	+ 5.0	+ 4.5	+ 5.5	+ 5.0	+11.0	+16.5
	30	−10.0	− 9.5	− 8.5	− 6.0	− 4.5	+ 0.5	+10.0
	45	−21.0	−19.5	−18.0	−14.0	−12.0	− 4.5	+ 0.5
	60	−28.5	−25.0	−24.5	−21.0	−18.5	−10.0	− 5.5
	90	−38.5	−34.0	−31.0	−28.5	−25.5	−19.0	−18.0
	120	−43.5	−37.0	−34.5	−31.0	−27.0	−20.5	−23.5
B	15	0	+ 2.0	+ 2.0	+ 1.5	+ 3.0	+ 5.0	+ 1.0
	30	−12.0	−11.0	−10.5	− 9.5	−10.0	− 8.5	− 7.5
	45	−22.5	−20.5	−19.0	−18.5	−18.5	−16.0	−14.5
	60	−29.0	−26.5	−25.5	−23.5	−22.5	−19.5	−19.5
	90	−38.5	−34.0	−38.0	−28.5	−27.5	−25.0	−24.0
	120	−37.0	−33.5	−30.5	−29.0	−27.5	−25.5	−25.5
C	15	+ 0.5	+ 1.0	+ 0.5	+ 1.5	+ 2.0	+11.0	+14.0
	30	−11.5	−11.5	−12.0	− 8.5	− 6.0	+ 4.5	+10.5
	45	−19.5	−20.0	−18.0	−16.0	−13.5	− 0.5	+ 6.0
	60	−25.0	−26.0	−22.5	−20.5	−18.0	− 4.5	+ 5.0
	90	−30.5	−31.5	−29.0	−26.0	−23.5	− 9.5	− 1.5
	120	−32.5	−34.0	−31.5	−29.0	−26.5	−15.0	− 5.0
D	15	+ 3.5	+ 1.5	+ 1.5	− 0.5	− 1.0	+ 7.0	+10.5
	30	− 9.5	−12.0	−10.0	−11.0	−10.5	− 2.0	+ 4.5
	45	−19.0	−19.0	−18.5	−18.5	−15.5	− 6.0	+ 1.5
	60	−21.0	−24.0	−23.5	−22.5	−20.0	−10.0	− 2.5
	90	−33.0	−30.0	−28.0	−27.0	−25.0	−15.5	− 8.0
	120	−35.5	−32.5	−30.0	−29.5	−26.5	−20.0	− 9.0
	Time of Cure (Minutes) to T-50 of −7.0° C.							
A		26	27.5	27.0	32.0	35.0	50.0	59.0
B		23	25	26	23	26	27	30.0
C		24	23.5	22.5	27.5	31.5	74	..
D		27.5	24	25.5	24.0	22.5	47	82.0

Table VI and Figure 6 show the results with a combination accelerator, in this case benzothiazyl thiobenzoate (Ureka-C) and 2 diphenylguanidine, 1 phthalic acid, 1/2 water (Guantal).

The base formula hereinafter referred to as compound 3 is as follows:

Smoked sheet	100
Sulfur	3
Ureka-C	0.45
Guantal	0.30
Stearic acid	1

Table VII and Figure 7 give the results with a thiazole zinc salt and Laurex (Z. M. L.).

The base formula hereinafter referred to as compound 4 is as follows:

Smoked sheet	100
Sulfur	3
Z. M. L.	1.95
B. L. E.	1
Laurex	0.5

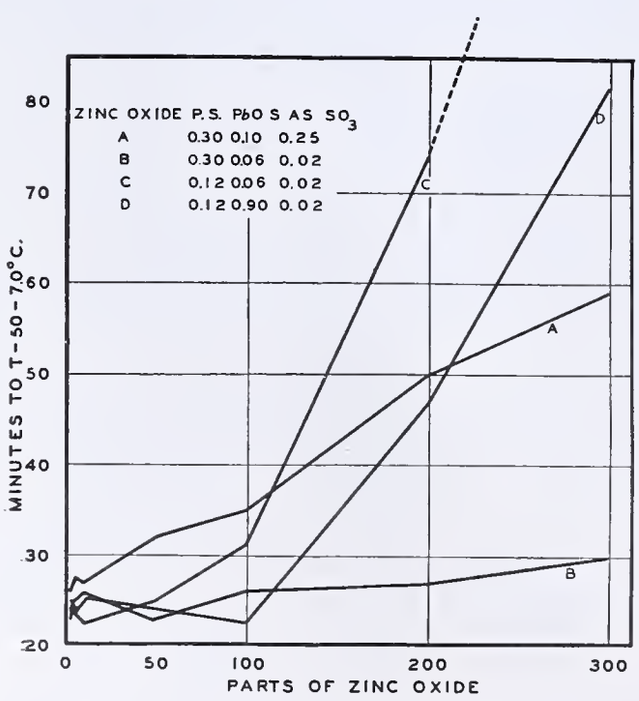

FIGURE 7. TESTS ON COMPOUND 4, Z. M. L.

TABLE VIII. GUM STOCK

(Minutes to T-50 of −7° C.)

Accelerator	5 Parts Zinc Oxide	Minutes to −7.0° C.	10 Parts Zinc Oxide	Minutes to −7.0° C.
Captax	*B*	35.0	*D*	35.0
	D	36.0	*C*	38.0
	C	37.0	*B*	40.0
	A	39.5	*A*	43.0
808	*D*	54.0	*D*	54.0
	C	58.0	*C*	54.5
	B	63.5	*B*	59.0
	A	66.5	*A*	62.0
Ureka C-Guantal	*D*	28.5	*D*	27.5
	B	29.0	*C*	29.0
	C	29.5	*B*	29.5
	A	33.0	*A*	33.5
Z. M. L.	*C*	23.5	*C*	22.5
	D	24.0	*D*	25.0
	B	25.0	*B*	26.0
	A	27.5	*A*	27.0

In both these latter series, the same conclusions which were reached in the first series are confirmed.

Eliminating for the moment stocks with high zinc oxide loading and considering only those containing activation amounts of zinc oxide, some interesting comparisons can be made. In the compounds containing 5 and 10 parts of zinc oxides, while the differences are small and probably of little commercial significance, these differences are consistent. In every case, the slow-curing oxide, *A*, has the slowest rate of cure as judged by the T-50 test, being 5 or 6 minutes slower than zinc oxide *D*, which generally gives faster curing compounds. The spread between the extremes is somewhat greater in the case of the alkaline accelerators. These data are shown in Table VIII.

This conclusion being true for gum stocks, it was of particular interest to determine what differences could be detected in a loaded compound such as a tread stock. In Table IX are shown the results obtained in a typical tread stock accelerated with Captax and containing 40 parts of carbon black. Here the differences in zinc oxide are much less marked; in the case of 5 parts of pigment, zinc oxides *A*, *B*, and *C* are essentially equal, and zinc oxide *D* is only slightly faster. With 10 parts of zinc oxide, differences are noted which are not consistent with the observations made with the gum stocks.

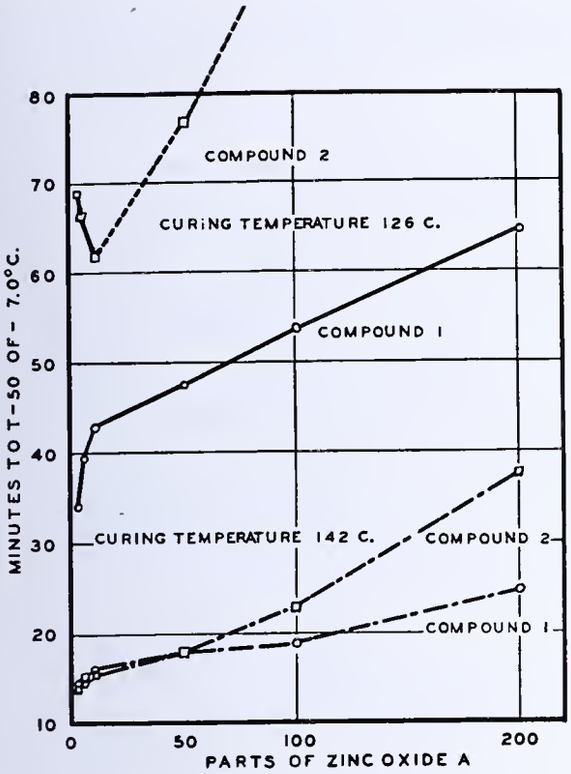

FIGURE 8. TESTS ON ZINC OXIDE *A*

A similar set of tests with a compound loaded with whiting is shown in Table X. Here the differences in zinc oxides are about as well marked as they are in the case of the gum stocks, the oxides lining up in very much the same order. It would seem entirely likely that a compound extended with an inert pigment would show these differences, whereas a stock containing a pigment of high absorption characteristics might entirely mask the effect of differences in zinc oxides.

In discussing the data obtained with 808, it was pointed out that the results were considerably slower than those obtained with the other accelerators, because of the selection of a curing temperature that was too low for the compound. Another set of data using zinc oxide *A*, but curing at 142° C. rather than 126° C., was obtained and is shown in Table XI and Figure 8.

Although the time of cure to a T-50 of −7° C. may be the same in both compounds at the higher temperature, the actual state of cure may be different. The interesting observation is that at this curing temperature the increase in zinc oxide content does not have the same retarding effect observed at the lower temperatures with either of these accelerators and it is only at the two higher loadings that any real differences can be observed.

A theoretical picture of the effect of the particle size of zinc oxide has been built up on the basis of accelerator and sulfur absorption. An extensive series of experiments has been carried out to demonstrate the correctness of these theories. By varying the accelerator and sulfur through a reasonable commercial range, the data shown in Table XII and Figure 9 have been obtained. For this series of experiments, Captax acceleration was again used.

It will be noted that at a loading of 50 parts of zinc oxide, zinc oxide *C*, the fine fast-curing oxide, is faster than the coarse fast oxide *B* when 1 per cent of accelerator is used. With 200 parts of pigment, the fine oxide is slower because of absorption of accelerator and sulfur as pointed out earlier. When the accelerator is increased to 1.4 parts, the fine oxide regains

TABLE IX. TREAD STOCK

5 Parts Zinc Oxide	Minutes to −7.0° C.	10 Parts Zinc Oxide	Minutes to −7.0° C.
D	75.0	*D*	74.5
A	88.0	*B*	83.5
B	88.0	*A*	85.0
C	88.5	*C*	88.0

Formula

Smoked sheet	100
Stearic acid	4
Pine tar	3
Carbon black	40
Captax	1.25
Sulfur	3
Zinc oxide	5 and 10

TABLE X. COMPOUND LOADED WITH WHITING

5 Parts Zinc Oxide	Minutes to −7.0° C.	10 Parts Zinc Oxide	Minutes to −7.0° C.
D	32.5	*D*	29.0
C	33.5	*C*	34.0
B	35.0	*B*	34.0
A	39.5	*A*	40.5

Formula

Smoked sheet	100
Sulfur	3
Captax	1
Stearic acid	3
Agerite powder	1
Whiting	67
Zinc oxide	5 and 10

TABLE XI. EFFECT OF CURING TEMPERATURE

	Curing Temperature ° C.	Parts of Zinc Oxide *A* 2	5	10	50	100	200
Compound 1	142	14.5	14.5	16.0	18.0	19.0	25.0
	126	34.0	39.5	43.0	47.8	54.0	65.0
Compound 2	142	14.0	15.0	15.5	18.0	23.0	38.0
	126	69.0	66.5	62.0	77.0	100.0	174.0

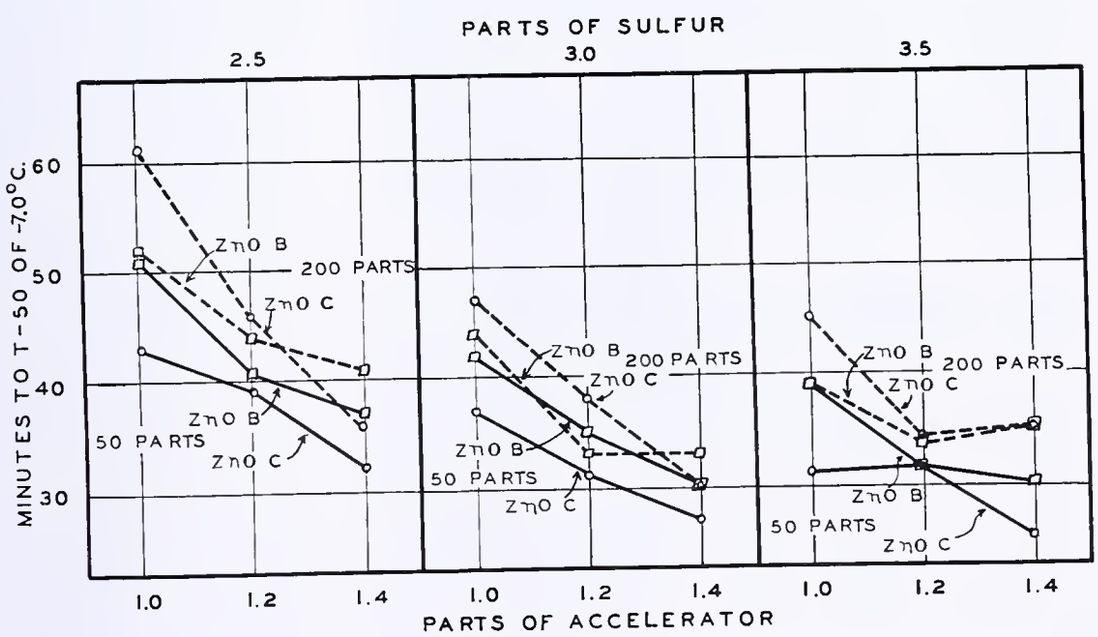

FIGURE 9. EFFECTS OF VARYING ACCELERATOR AND SULFUR

TABLE XII. EFFECT OF VARIATION OF SULFUR AND ACCELERATOR

(In compounds containing 50 and 200 parts of zinc oxides *B* and *C*)

Parts Sulfur	Parts Accelerator	Minutes to −7.0° C. at T-50: 50 parts zinc oxide *C*	50 parts zinc oxide *B*	200 parts zinc oxide *C*	200 parts zinc oxide *B*
2.5	1.0	43	51	61	52
	1.2	39	41	46	44
	1.4	32	37	36	41
3.0	1.0	37	42	47	44
	1.2	31	35	38	33
	1.4	27	30	30	33
3.5	1.0	31	39	45	39
	1.2	31.5	31.5	34	33.5
	1.4	25.0	30	35	35

Formula

Rubber	100
Stearic acid	3
Sulfur	2.5–3.0–3.5
Captax	1.0–1.2–1.4
Zinc oxide	50 and 200

its faster curing rate. Increase in sulfur content has essentially the same effect to a less marked extent. When the amount of sulfur and accelerator is increased to an excess, the differences between the two oxides are masked.

In presenting the data in this paper, the authors do not pretend to have exhausted the possibilities of investigations by means of the T-50 tests. There are innumerable problems which suggest themselves, which will be studied, but it is felt that the work has advanced to a point where the findings can be published and discussion of the method and data encouraged.

Conclusions

The T-50 test is an extremely satisfactory tool for the study of the curing rate of zinc oxides.

There are small differences in the curing rates of various zinc oxides when used in activation amounts in gum stocks and stocks loaded with inert extenders. In the presence of carbon black, these differences are not detectable.

There are marked differences in curing rate between the various zinc oxides in stocks containing more than 10 parts of pigment in 100 parts of rubber. The oxides containing sulfur show marked retardation, as do the fine oxides, at high loadings. In the first case, this retardation is caused by the chemical nature of the pigment; in the second case, by the absorption of sulfur and accelerator.

Literature Cited

(1) Gibbons, W. A., Gerke, R. H., and Tingey, H. C., IND. ENG. CHEM., Anal. Ed., 5, 279–83 (1933).

RECEIVED September 29, 1937. Presented before the Division of Rubber Chemistry at the 94th Meeting of the American Chemical Society, Rochester, N. Y., September 6 to 10, 1937.

Separation of Magnesium as Oxalate

By Precipitation in Concentrated Acetic Acid Solution

PHILIP J. ELVING AND EARLE R. CALEY
Frick Chemical Laboratory, Princeton University, Princeton, N. J.

Magnesium can be quantitatively precipitated as the oxalate in 85 per cent acetic acid solution. The precipitate may be ignited to oxide for the gravimetric determination of magnesium, or for the volumetric determination of magnesium the oxalic acid liberated by dissolving the magnesium oxalate in dilute sulfuric acid may be titrated with a standard permanganate solution. The alkalies can be conveniently determined in the filtrate after separation of the magnesium by this method.

THAT the usual methods for the separation and gravimetric determination of magnesium are unsatisfactory in some respects is commonly recognized. The widely used phosphate method sometimes yields incorrect results because of failure to obtain a double salt of correct composition, reduction of the precipitate on ignition, or other causes. Moreover, alkali metals cannot be conveniently determined in the filtrate from the magnesium determination. The use of 8-hydroxyquinoline as a precipitant for magnesium avoids the latter objection, and the method based upon its use is otherwise fairly satisfactory, though co-precipitation of the reagent with the precipitate is sometimes a source of trouble. In the method here described, which is based upon the insolubility of magnesium oxalate in 85 per cent acetic acid, the precipitate is readily obtained in a pure state, and any of the alkalies can be conveniently determined in the filtrate from the magnesium determination.

Though magnesium oxalate is but slightly soluble in water, it has long been known that the addition of excess oxalate ion to dilute magnesium solutions does not produce a precipitate of magnesium oxalate. Various investigators have observed that the addition of certain organic solvents to such magnesium oxalate solutions causes the precipitation of the magnesium oxalate. From the practical analytical viewpoint only organic solvents completely miscible with water are of value in this respect, and from preliminary experiments it was found that acetic acid is the best of these, since the solubility of ammonium and alkali salts is too low in such solvents as ethanol and acetone.

The insolubility of magnesium oxalate in concentrated acetic acid solution was apparently first noticed by Souchay and Lenssen (*3*). Classen (*1*) attempted to apply this fact to the determination of magnesium. In his procedure a 25-ml. volume of magnesium solution is treated with 1.5 to 2.0 grams of ammonium oxalate while the solution is being heated. Then an equal volume of 80 per cent acetic acid is added to the boiling solution, which after further boiling for a few minutes is allowed to stand for 6 hours at 50° C. The precipitated magnesium oxalate is filtered off, washed with a solution of equal parts of water, acetic acid, and alcohol, and finally ignited to magnesium oxide. Thirty-four experimental results given by Classen for amounts of magnesium oxide

nging from 0.0377 to 0.2075 gram are, with but five exceptions, low, the range of error being +0.0008 to −0.0021 ram. The average error is −0.0007 gram on an average agnesium oxide weight of 0.1105 gram.

Apparently Nass (*2*) has been the only one to investigate lassen's method critically. In the experiments of Nass, 30 l. of 85 per cent acetic acid were added to 25 ml. of boiling olution that contained 1.3232 grams of $MgSO_4 \cdot 7H_2O$ and 4 rams of ammonium oxalate. After precipitation under the onditions recommended by Classen, the precipitate was ltered off, washed, and ignited to oxide. In two experiments Iass obtained 0.2119 and 0.2117 gram of MgO from a sample eight of magnesium sulfate that should have given him .2164 gram on the basis of present atomic weights, an verage difference of −0.0046 gram. It will be seen that lassen's method is far from quantitative, though Nass, on he basis of the atomic weights then in use, considered it atisfactory for routine work. The data in Table I show why lassen and Nass obtained such poor results in attempting o precipitate magnesium oxalate quantitatively from about 0 per cent acetic acid solution.

For the experiments represented in Table I, a total volume f 100 ml. was used, and the method of determination was imilar to that given in the general procedure. It is evident hat precipitation in 85 per cent acetic acid leads to quantitative results if sufficient reagent is present, and that with a onsiderable excess of reagent a medium of slightly lower acid oncentration may be used. However, when large amounts f magnesium are to be precipitated, the relatively low solubility of ammonium oxalate in acetic acid solutions prevents he use of a large excess of reagent. Hence, in general, the use f a medium of the highest practical concentration in respect o acetic acid is necessary. Oxalic acid, though more soluble han ammonium oxalate, cannot be employed as a reagent ecause the increased hydrogen-ion concentration introduced y its use leads to increased solubility of the magnesium xalate. From these solubility experiments and from systematic experiments on method of precipitation, time of standing after precipitation, technic of filtration, and treatment of recipitate for weighing, the following procedure was developed.

General Procedure

Concentrate the neutral solution containing magnesium, ammonium, and the alkali metals to a volume of 5 ml. or, preferably, evaporate it to dryness and dissolve the residue in 5 ml. of water. If less than about 40 mg. of magnesium as metal is present, add 85 ml. of glacial acetic acid, to this solution, and with constant stirring add slowly from a pipet 10 ml. of saturated ammonium oxalate solution. If a larger amount of magnesium is present, add 70 ml. of glacial acetic acid to the sample solution, and then slowly add 25 ml. of a solution made up of 1 gram of ammonium oxalate dissolved in a mixture of 15 ml. of acetic acid and 10 ml. of water. If both magnesium and sulfate are present in large amounts, first add the 25 ml. of special oxalate reagent, which should be warm in this case, and then add the 70 ml. of acetic acid. After precipitation by any of these methods allow the covered vessel to stand on the steam bath until the magnesium oxalate precipitate settles in a flocculent mass leaving the supernatant liquid clear. This should require from 30 to 60 minutes. Decant the supernatant liquid through retentive quantitative paper, such as Munktell's No. 00, and wash the precipitate once or twice by decantation using hot 85 per cent acetic acid. Finally, transfer the precipitate to the filter and wash with the hot acid solution which is preferably delivered from an all-glass wash bottle. Ordinarily a total of about 60 ml. of 85 per cent acid in three to five portions is sufficient for washing.

If accurate results are desired when both magnesium and alkali metal salts are present in large quantities, a double precipitation should be made. For this purpose dissolve the magnesium oxalate from the filter with the minimum necessary amount of hot 3 *N* hydrochloric acid and wash out the paper with hot water. Evaporate the solution to dryness and add 2 ml. of concentrated nitric acid and 5 ml. of concentrated perchloric acid to the residue. Heat to destroy the oxalate, finally fuming off all the excess perchloric acid. Dissolve the residue in 5 ml. of water and precipitate as before.

For ignition, place the paper and precipitate in a weighed platinum crucible, heat gently at first to expel acetic acid and water, then char and burn off the paper in the usual way. Finally ignite in a covered platinum crucible at the highest temperature obtainable with a Méker burner or blast lamp. Cool in a desiccator containing an efficient desiccant and weigh as MgO. If a platinum crucible is not available, ignition may be made in porcelain, but it is difficult in this case to ignite the magnesia at a temperature high enough to render it sufficiently nonhygroscopic for accurate weighing and to burn off all carbonaceous matter. If a porcelain crucible is used it is therefore best to check the result by dissolving the magnesia in a slight excess of dilute sulfuric acid in the crucible, followed by evaporation to dryness, ignition at 400° to 500° C. and final weighing as $MgSO_4$.

For preparation of the filtrate from the magnesium determination for the determination of the alkalies, add 25 to 30 ml. of concentrated nitric acid and evaporate to dryness. Add 2 ml. of nitric and 5 ml. of perchloric acid to the residue and again evaporate to dryness. Finally fume off all excess perchloric acid. The residue may then be used for the systematic separation of the alkalies or for their direct or indirect determination by various procedures.

Table I. Effect of Composition of Medium and Concentration of Reagent on Completeness of Precipitation of Magnesium by Ammonium Oxalate in Acetic Acid Solution

CH_3COOH Per Cent by Volume	Equivalents of $(NH_4)_2C_2O_4$ Present	Mg Taken *Gram*	Mg Found *Gram*	Difference, Error *Gram*
50	1	0.0100	0.0000	−0.0100
60	1	0.0100	0.0014	−0.0086
70	1	0.0100	0.0060	−0.0040
80	1	0.0100	0.0078	−0.0022
90	1	0.0100	0.0097	−0.0003
40	2	0.0100	0.0000	−0.0100
50	2	0.0100	0.0020	−0.0080
60	2	0.0100	0.0077	−0.0023
70	2	0.0100	0.0097	−0.0003
80	2	0.0100	0.0098	−0.0002
85	2	0.0100	0.0100	±0.0000
30	4	0.0100	0.0000	−0.0100
40	4	0.0100	0.0035	−0.0065
50	4	0.0100	0.0081	−0.0019
60	4	0.0100	0.0095	−0.0005
70	4	0.0100	0.0098	−0.0002
80	4	0.0100	0.0100	±0.0000
85	4	0.0100	0.0101	+0.0001

Interfering Substances. Heavy metals and alkaline earth metals must be absent, since their oxalates are generally insoluble in concentrated acetic acid solutions. Magnesium, ammonium, and the alkali metals may be in the form of chlorides, nitrates, acetates, perchlorates, or sulfates, but for ease of separation of magnesium from the alkalies it is preferable to have them in the form of the first three. Though potassium perchlorate is generally insoluble in organic solvents, its solubility in 85 per cent acetic acid is high enough so that no difficulty should arise in practical cases when using analytical samples of around a gram in weight. Sulfate solutions are the least desirable because of the relatively small solubilities of the sulfates of magnesium, ammonium, and the alkalies in concentrated acetic acid solutions, but here again the procedure is applicable in ordinary cases. Oxalates should be absent.

Ammonium salts must not be present in such large amounts that they will not dissolve in the small volume of sample solution required in the method. Since magnesium is usually determined in the filtrate from the determination of calcium as oxalate, the excess of ammonium salts in this filtrate must first be destroyed by oxidation with nitric acid in the customary way, followed by removal of the oxalate with nitric and perchloric acids as described in the procedure. Various other reagents such as aqua regia, nitric and sulfuric acids, bromine, and ammonium persulfate were tested for their efficiency in removing oxalate, but the mixture of nitric and perchloric acids was found to be the best. The magnesium solution should be approximately neutral. If strongly acidic it should

Table II. Determination of Magnesium Alone

Analysis No.	Mg Taken *Gram*	Mg Found *Gram*	Difference, Error *Gram*
1	0.0001	0.0002	+0.0001
2	0.0001	0.0002	+0.0001
3	0.0002	0.0001	−0.0001
4	0.0002	0.0002	±0.0000
5	0.0003	0.0002	−0.0001
6	0.0003	0.0004	+0.0001
7	0.0011	0.0011	±0.0000
8	0.0011	0.0011	±0.0000
9	0.0025	0.0026	+0.0001
10	0.0025	0.0025	±0.0000
11	0.0100	0.0100	±0.0000
12	0.0101	0.0101	±0.0000
13	0.1001	0.1006	+0.0005
14	0.1001	0.1007	+0.0006
15	0.0100	0.0098	−0.0002[a]
16	0.0101	0.0101	±0.0000[a]
17	0.1001	0.0998	−0.0003[a]
18	0.1001	0.1002	+0.0001[a]

[a] Double precipitation in these cases.

be neutralized with ammonium hydroxide solution and then made just barely acid with acetic acid.

Method of Precipitation. Whenever possible the first method of precipitation should be used because the resulting precipitate is most easily filtered and washed. The second method is necessary in order to introduce sufficient reagent when precipitating the larger amounts of magnesium. The third variation is required because the direct addition of glacial acetic acid to concentrated magnesium sulfate solutions produces a precipitate of magnesium sulfate. Because of the large volume of magnesium oxalate precipitated in this way and because of the limits imposed by the low solubility of the reagent, precipitation of more than about 100 mg. of magnesium should not be attempted.

Filtration and Washing. Because of the irritating physiological action of acetic acid fumes, it is strongly recommended that these operations be performed under a good hood. The process of washing the bulky and finely divided magnesium oxalate precipitate will be unduly prolonged if the solution is not kept warm. The addition of paper pulp does not noticeably accelerate the process of filtration, since the acetic acid hardens the paper and prevents its proper dispersion. Attempts to use filtering crucibles met with little success, because with other than minute amounts of magnesium the somewhat gelatinous precipitate rapidly clogged the pores of glass or porcelain filter disks. The use of an all-glass wash bottle is almost a necessity because of the solvent action of hot concentrated acetic acid on rubber. For the same reason a rubber policeman cannot be used for transferring the precipitate. Small pieces of quantitative filter paper should be used for the removal of any small residues of magnesium oxalate that adhere to the walls of the precipitating vessel. When the maximum amount of reagent is used for the precipitation of only a few milligrams of magnesium, the excess of ammonium oxalate will frequently crystallize out in the filtrate on cooling. Since this salt is distinctly crystalline in appearance, it should not readily be mistaken for magnesium oxalate that has run through a defective filter.

Ignition and Weighing. Carbonaceous matter concealed in lumps of magnesium oxide after ignition is the most serious single cause of error in this method. Not only is the presence of this foreign material not easily evident from appearance, but it is sometimes not readily detected by weighing because it burns off very slowly when insulated from heat by the voluminous magnesium oxide. Therefore, the precipitate should be broken up and stirred at intervals during ignition. If any suspicion arises as to the presence of carbonaceous matter in the ignited precipitate, the magnesium oxide may be dissolved in dilute hydrochloric acid, and any carbonaceous matter that remains may be readily determined by filtering it off on a filter crucible and weighing it after drying at about 100°. Even though conversion to sulfate involves an extra step, this is highly desirable when the ignition of precipitates weighing more than a few milligrams is done in porcelain, since only in this way can the carbonaceous matter be burned away in a conveniently short time.

Test Analyses

For the analytical experiments on pure magnesium solutions and on solutions containing magnesium and other metal ions, distilled magnesium metal, furnished by courtesy of the Aluminum Company of America, was used as the standard of reference. This was stated to contain 99.99 per cent of magnesium, and its high purity was confirmed by both chemical and spectroscopic examination. Standard magnesium solutions were prepared by dissolving accurately weighed quantities of the metal in the minimum necessary quantity of constant-boiling hydrochloric acid, followed by dilution in calibrated flasks. The concentration of each of these solutions was checked by adding a slight excess of sulfuric acid to a carefully measured volume, evaporating in a platinum dish, and weighing the residual magnesium sulfate.

In Table II are shown typical results from test determinations on pure magnesium chloride solutions. Numbers 13 and 14 may be taken as typical of the error that is caused by failure to burn off the last traces of carbonaceous matter. The last four determinations in the table show that no loss occurs when a double precipitation is made.

Table III. Determination of Magnesium in Presence of Lithium

Li Present *Gram*	Mg Taken *Gram*	Mg Found *Gram*	Difference, Error *Gram*
0.0100	0.0011	0.0011	±0.0000
0.0100	0.0011	0.0011	±0.0000
0.1000	0.0010	0.0012	+0.0002
0.1000	0.0010	0.0011	+0.0001
0.0100	0.0100	0.0101	+0.0001
0.0100	0.0100	0.0100	±0.0000
0.0500	0.0102	0.0106	+0.0004
0.0500	0.0102	0.0104	+0.0002
0.1000	0.0100	0.0108	+0.0008
0.1000	0.0100	0.0109	+0.0009
0.0010	0.1001	0.1000	−0.0001
0.0010	0.1001	0.1000	−0.0001
0.0100	0.1001	0.1005	+0.0004
0.0100	0.1001	0.1003	+0.0002
0.0100	0.0010	0.0009	−0.0001[a]
0.0100	0.0010	0.0009	−0.0001[a]
0.1000	0.0011	0.0010	−0.0001[a]
0.1000	0.0011	0.0008	−0.0003[a]
0.0100	0.0100	0.0100	±0.0000[a]
0.0100	0.0100	0.0099	−0.0001[a]
0.1000	0.0100	0.0101	+0.0001[a]
0.1000	0.0100	0.0102	+0.0002[a]
0.0010	0.1000	0.1000	±0.0000[a]
0.0010	0.1000	0.1001	+0.0001[a]
0.0100	0.1000	0.0999	−0.0001[a]
0.0100	0.1000	0.1000	±0.0000[a]
0.0100	0.1001	0.1004	+0.0003[a]
0.0100	0.1000	0.0998	−0.0002[a]

[a] Double precipitation.

Tables III, IV, and V show the effect of the presence of individual alkalies on the accuracy of the magnesium determination. Chloride solutions were used in all these experiments. It will be noted that in certain cases both lithium and sodium cause a noticeable positive error when only a single precipitation is made, lithium having the most serious effect. On the other hand, as shown by the results in Table V, potassium causes no error when present in the same proportions. It is also evident that the error introduced by the tendency of lithium or sodium compounds to be adsorbed on or co-precipitated with the magnesium oxalate can be avoided by double precipitation. However, very large amounts of sodium, such as might be present after a sodium carbonate fusion, cannot be separated conveniently.

Table IV. Determination of Magnesium in the Presence of Sodium

Na Present	Mg Taken	Mg Found	Difference, Error
Gram	*Gram*	*Gram*	*Gram*
0.1000	0.0011	0.0010	−0.0001
0.1000	0.0010	0.0011	+0.0001
0.0100	0.0100	0.0101	+0.0001
0.0100	0.0100	0.0100	±0.0000
0.1000	0.0100	0.0101	+0.0001
0.1000	0.0100	0.0103	+0.0003
0.0100	0.1003	0.1009	+0.0006
0.0100	0.1003	0.1007	+0.0004
0.1000	0.0010	0.0010	±0.0000[a]
0.1000	0.0010	0.0010	±0.0000[a]
0.1000	0.0100	0.0099	−0.0001[a]
0.1000	0.0100	0.0101	+0.0001[a]
0.0100	0.1001	0.1003	+0.0002[a]
0.0100	0.1001	0.0998	−0.0003[a]

[a] Double precipitation.

Table V. Determination of Magnesium in the Presence of Potassium

K Present	Mg Taken	Mg Found	Difference, Error
Gram	*Gram*	*Gram*	*Gram*
0.1000	0.0010	0.0011	+0.0001
0.1000	0.0010	0.0011	+0.0001
0.1000	0.0100	0.0101	+0.0001
0.1000	0.0102	0.0101	−0.0001
0.0100	0.1003	0.1004	+0.0001
0.0100	0.1003	0.1002	−0.0001
0.1000	0.0010	0.0009	−0.0001[a]
0.1000	0.0010	0.0009	−0.0001[a]
0.1000	0.0100	0.0098	−0.0002[a]
0.1000	0.0100	0.0100	±0.0000[a]
0.0100	0.1001	0.0998	−0.0003[a]
0.0100	0.1001	0.1004	+0.0003[a]

[a] Double precipitation.

In Table VI are shown results that were obtained on the determination of both magnesium and individual alkalies after separation by single precipitation. In all these experiments the filtrates from the magnesium determinations were treated with nitric and perchloric acids as described in the general procedure. Lithium was determined by converting the perchlorate residue into sulfate for weighing. For the determination of sodium or potassium these were weighed either as perchlorates or as sulfates. Here also lithium causes the most error, whereas in the other experiments the results are satisfactory for both magnesium and the alkalies.

Table VI. Determination of Magnesium and Individual Alkalies in the Same Sample

Alkali Present	Alkali Taken	Alkali Found	Difference, Error	Mg Taken	Mg Found	Difference, Error
	Gram	*Gram*	*Gram*	*Gram*	*Gram*	*Gram*
Li	0.0101	0.0101	±0.0000	0.0102	0.0102	±0.0000
	0.0250	0.0250	±0.0000	0.0102	0.0101	−0.0001
	0.0251	0.0246	−0.0005	0.0102	0.0103	+0.0001
	0.499	0.0493	−0.0006	0.0102	0.0106	+0.0004
Na	0.0255	0.0255	±0.0000	0.0102	0.0101	−0.0001
	0.0250	0.0251	+0.0001	0.0102	0.0101	−0.0001
	0.0500	0.0503	+0.0003	0.0102	0.0103	+0.0001
	0.0500	0.0499	−0.0001	0.0102	0.0101	−0.0001
K	0.0446	0.0447	+0.0001	0.0102	0.0102	±0.0000
	0.0510	0.0512	+0.0002	0.0102	0.0099	−0.0003
	0.1000	0.1003	+0.0003	0.0102	0.0101	−0.0001
	0.1005	0.1005	±0.0000	0.0102	0.0101	−0.0001

The method was further tested by the determination of magnesium in two standard samples issued by the Bureau of Standards—namely, argillaceous limestone No. 1a and dolomite No. 88.

In analyzing the argillaceous limestone, the dried and weighed samples were first strongly ignited in platinum. Then the major part of the silica was removed by the usual hydrochloric acid method. The aluminum, iron, and accompanying constituents were removed by double precipitation with ammonium hydroxide. In samples 4, 5, and 6 bromine water was added prior to precipitation. Calcium was separated as oxalate, but in samples 1, 2, and 3 the precipitation was performed by the slow addition of dilute ammonium hydroxide to the acidified solutions, and a double precipitation was made, whereas in the other three samples the calcium was precipitated once by the urea method of Willard and Chan. The oxalate and the excess of ammonium salts were removed from the calcium filtrates by the use of nitric and perchloric acids, and the residual salts were dissolved in dilute hydrochloric acid. After filtration to remove dust and silica, these solutions were evaporated to dryness, and the residues were each dissolved in 5 ml. of water for the precipitation of the magnesium by the first method given in the general procedure. On ignition, the precipitates from samples 1, 2, and 3 turned dark gray, evidently because of the presence of oxides of manganese and carbonaceous matter. In order to remove both contaminants, the impure oxides were treated with dilute nitric acid which dissolved only the magnesium oxide. The nitric acid solutions were then filtered, but instead of drying and weighing the impurities to obtain a correction to apply to the weights of the impure oxides, which is perhaps the more convenient method, the filtrates were evaporated and the magnesium was redetermined to obtain the second and more exact set of results shown in Table VII.

The precipitates of Nos. 4, 5, and 6 were also gray after the first ignition, but on evaporation with dilute sulfuric acid and conversion to sulfate, the carbonaceous matter responsible for the discoloration burned off, leaving pure residues of magnesium sulfate, the weights of which were used for obtaining the final results on these samples. It will be seen from Table VII that the final results obtained by either variation of the method agree well with the established percentage of magnesium in this sample. Apparently if even small amounts of manganese are not removed prior to the determination of magnesium by this method, the manganese will be precipitated and weighed with the magnesium. Therefore, in such a case the weights of the magnesium oxide should be corrected for the presence of oxides of manganese either by the methods mentioned here or from the results of colorimetric determinations of the manganese in the ignited magnesium oxide or the original material.

Table VII. Determination of Magnesium in Standard Argillaceous Limestone Sample

Analysis No.	Sample Taken	MgO Found on First Precipitation		MgO Found on Second Precipitation		MgO Weighed as Sulfate	
	Grams	*Gram*	*%*	*Gram*	*%*	*Gram*	*%*
1	1.3605	0.0317	2.33	0.0303	2.21	..	..
2	1.3674	0.0320	2.34	0.0302	2.19	..	..
3	1.3055	0.0296	2.27	0.0286	2.23	..	..
4	1.2495	0.0294	2.35	..	..	0.0274	2.20
5	1.3258	0.0298	2.25	..	..	0.0290	2.19
6	1.3777	0.0301	2.19	..	..	0.0292	2.12
Av.			2.29		2.21		2.17
Stated MgO percentage, U. S. Bureau of Standards							2.19

In analyzing the dolomite, the silica, the aluminum and iron, and the calcium were all separated by the conventional procedure for the analysis of carbonate rock, the oxalate and ammonium salts being removed from the calcium filtrates by the use of nitric and perchloric acids. The residual salts were dissolved in dilute hydrochloric acid, and after filtration the solutions were evaporated to dryness. Then each of the residues was dissolved in 5 ml. of water, and the magnesium was precipitated by the second method given in the general procedure. The oxides from the first precipitation were found to contain calcium, as would be expected from the fact that calcium is imperfectly separated by the oxalate method in the presence of disproportionate amounts of magnesium. In order to remove the calcium, the ignited precipitates were each dissolved in a slight excess of dilute sulfuric acid, and the calcium was precipitated as sulfate from a small volume of solution by the addition of nine volumes of methanol, a method that was shown by an independent investigation to give a sharp separation. After removal of the calcium sulfate by filtration, the filtrates were evaporated to dryness and magnesium determinations were repeated with the results shown in Table VIII.

After this redetermination the ignited precipitates evidently contained slight amounts of carbon or carbonaceous matter. Instead of removing this by prolonged ignition, the precipitates were dissolved in dilute sulfuric acid, and the impurities were filtered off on filter crucibles and weighed, these weights then being applied as a correction to obtain

the final results shown in Table VIII. These results, with the exception of No. 2, agree well with the established percentage. It is likely that mechanical loss caused the slightly low results on the second sample.

TABLE VIII. DETERMINATION OF MAGNESIUM IN STANDARD DOLOMITE SAMPLE

Analysis	Sample Taken	MgO Found on First Precipitation		MgO Found on Second Precipitation		MgO Found after Final Correction	
	Gram	*Gram*	%	*Gram*	%	*Gram*	%
1	0.3395	0.0747	22.00	0.0737	21.71	0.0732	21.56
2	0.5741	0.1258	21.91	0.1229	21.42	0.1222	21.29
3	0.6137	0.1354	22.06	0.1323	21.56	0.1321	21.53
4	0.8057	0.1775	22.03	0.1739	21.58	0.1736	21.54
Av.			22.00		21.57		21.48
Stated MgO percentage, U. S. Bureau of Standards							21.49

From these experiments on actual samples it was found, therefore, that this method for the separation and determination of magnesium could be fitted into the ordinary analytical scheme with little difficulty. Other experiments indicated that it also could be used in systematic qualitative analysis.

Indirect Volumetric Determination of Magnesium

Instead of converting the precipitated magnesium oxalate to oxide for weighing, the determination may be completed by dissolving the precipitate in dilute sulfuric acid and titrating the liberated oxalic acid with standard permanganate. However, if this is done a modification in procedure is desirable, chiefly because the complete removal of the reagent from filter paper by washing with 85 per cent acetic acid is too time-consuming a process. It was found much more satisfactory to separate and wash the precipitate by means of the centrifuge according to the following method:

VOLUMETRIC PROCEDURE. Transfer the 5 ml. of magnesium sample solution to a conical centrifuge vessel of about 125-ml. capacity, using glacial acetic acid for rinsing out the original vessel. Add glacial acetic acid to the contents of the centrifuge vessel until the total volume is 90 ml. Precipitate the magnesium by the slow addition of 10 ml. of saturated ammonium oxalate solution and coagulate the precipitate by placing the centrifuge vessel on a steam bath for about an hour. Then centrifuge at high speed until the precipitate packs at the bottom of the vessel. This should require less than 10 minutes. Carefully decant or siphon off as much supernatant liquid as possible without disturbing the precipitate and add 15 to 25 ml. of hot 85 per cent acetic acid. After shaking to distribute the precipitate in the wash liquid, and washing down any precipitate that has collected on the sides of the vessel above the level of the liquid, centrifuge again. Repeat the washing process until a sample of the supernatant liquid fails to produce a precipitate when tested with calcium chloride solution. Ordinarily three washings will be sufficient. Dissolve the washed precipitate, together with the remaining few milliliters of wash liquid that cannot be safely removed, in 5 per cent sulfuric acid. After washing out this solution into the titrating vessel with additional 5 per cent sulfuric acid, titrate the oxalic acid with standard permanganate solution in the usual way. One milliliter of 0.1 *N* permanganate solution is equivalent to 0.001216 gram of magnesium.

A stoppered centrifuge vessel with a stem into which the precipitate can be centrifuged is the most satisfactory type. In order to prevent troublesome adherence of the precipitate to the walls of the vessel it is necessary to clean it thoroughly with dichromate cleaning solution before use.

The principal source of error is mechanical loss of fine particles of precipitate in the process of removing supernatant liquid. This usually occurs if an attempt is made to drain off the last few milliliters of liquid. The residual acetic acid left in and above the precipitate after the final washing does not react with the permanganate solution under the conditions of the titration.

By reason of the volume of the precipitate, especially after washing, it is inconvenient to determine more than about 25 mg. by this procedure.

EXPERIMENTAL RESULTS. In Table IX are shown results from a series of determinations by this volumetric procedure. In determinations 7 and 8, where some slight mechanical loss of precipitate was suspected, the decantations and washings were filtered for gravimetric determination of the suspended matter by ignition to magnesium oxide. In both cases the weights of oxide corresponded exactly to the deficiencies in the volumetric results. Hence, by avoidance of mechanical loss during washing, exact results should be obtained by this procedure. It becomes rapid if a multiple-head centrifuge is used for making a number of determinations simultaneously.

TABLE IX. VOLUMETRIC DETERMINATION OF MAGNESIUM

Analysis No.	Mg Taken	0.0515 *N* $KMnO_4$ Required	Mg Found	Difference, Error
	Gram	*Ml.*	*Gram*	*Gram*
1	0.0010	1.60	0.0010	±0.0000
2	0.0010	1.53	0.0010	±0.0000
3	0.0025	3.91	0.0024	−0.0001
4	0.0025	3.93	0.0025	±0.0000
5	0.0102	15.92	0.0100	−0.0002
6	0.0102	15.93	0.0100	−0.0002
7	0.0102	15.90	0.0100	−0.0002
8	0.0102	15.88	0.0099	−0.0003
9	0.0252	40.21	0.0252	±0.0000
10	0.0252	40.13	0.0251	−0.0001

Attempts to determine magnesium by measuring the volume of precipitate in a graduated centrifuge tube were not successful because reproducible results could not be obtained.

General Remarks

Because of the bulk of magnesium oxalate precipitated in acetic acid solution and the attendant difficulties in filtering and washing, both the gravimetric and volumetric procedures are most satisfactory in practice when applied to the separation and determination of amounts of magnesium not exceeding 25 mg., though as much as 100 mg. can be handled by the gravimetric procedure. From the standpoint of speed, this method is superior to the phosphate method and compares favorably with the 8-hydroxyquinoline method. When magnesium must be separated prior to the determination of the alkalies and platinum ware is not available, this method has the peculiar advantage that the separation is carried out in acid solution so that introduction of alkalies from the glass or porcelain becomes a negligible source of error. Another distinct advantage is the ease with which impurities in the ignited precipitate, whether oxide or sulfate, can be tested for and removed. The chief inconvenience of the method, working with hot concentrated acetic acid solutions, is not serious in practice if a good hood is available.

Literature Cited

(1) Classen, A., *Z. anal. Chem.*, **18**, 373 (1879).
(2) Nass, G., *Z. angew. Chem.*, **7**, 501 (1894).
(3) Souchay, A., and Lenssen, E., *Ann.*, **99**, 31 (1856).

RECEIVED September 9, 1937. Constructed from a portion of a dissertation submitted by Philip J. Elving in partial fulfillment of the requirements for the degree of doctor of philosophy, Princeton University, 1937.

Arsenate Method for Determination of Zirconium

The article entitled "The Arsenate Method for the Determination of Zirconium," by W. C. Schumb and E. J. Nolan [IND. ENG. CHEM., Anal. Ed., **9**, 371 (1937)] was based largely on work supported by a J. T. Baker Chemical Company Fellowship awarded to E. J. Nolan for the year 1934–35.

Determination of the Stain Number of Asphalts

H. E. SCHWEYER[1] AND H. C. HOWELL, The Barber Company, Inc., Maurer, N. J.

To determine the staining propensity of asphalt, the sample is placed between pads consisting of 16 sheets of a special grade of paper under a given load at 54.4° C. (130° F.), and the staining is evaluated by the number of sheets discolored by the exuded oil. The stain number (number of sheets discolored) gives a direct measure of the staining propensity which may be used to compare asphalts from various sources.

LABORATORY evaluation of asphalts used as plying adhesives in the manufacture of waterproof wrapping papers and cartons requires a rapid method for determining the staining propensity of such materials. Several different methods are employed by manufacturers of paper products to determine this characteristic of asphalt, but most of these tests have the disadvantage of requiring the use of a standard asphalt. The degree of staining is usually evaluated by comparing the color of a stain made on filter paper under given conditions, by the standard and unknown samples, or by determining the relative length of time required for the asphalts to give an appreciable stain to a piece of filter paper. The results obtained by these methods are dependent upon the personal element in rating the samples because they are influenced by the amount of saturation of the paper by the asphalt and by the color of the oil exuded by different asphalts.

The slight but undesirable discoloration of paper plied together with certain asphalts is caused by the exudation of some part of the oily phase from the colloidal asphalt (*3*, *4*). The degree to which the asphaltenes are dispersed determines in part the "stability" of this colloidal system, and therefore how well it will retain the oily material. Comparative solubilities in partial solvents cannot be used to evaluate the staining propensity of different asphalts, since the amount of dispersed material thereby indicated does not determine the "stability" of the colloidal system. The physical chemical composition of an asphalt and the changes in internal structure which occur with time probably determine its staining propensity. Asphalts processed in different ways and from different crude oils show varying degrees of staining.

The method described below for evaluating the staining of paper in contact with asphalt has been successfully used in this laboratory for the past 18 months. It was adopted after a study of more elaborate methods, such as photoelectric measurement of light transmitted through stained and unstained paper, and comparative reflection of light from stained and unstained paper. While these latter methods are probably more sensitive than the test described, they have the disadvantage of requiring special apparatus and a technically trained operator.

Stain Number

The procedure for determining the "stain number" of an asphalt is as follows:

One gram of the cold asphalt, weighed to the nearest 0.02 gram, is cut from below the surface of the sample and is made into a flat disk about 1.5 cm. in diameter. This disk is then placed between two pads, clipped together at one end, each consisting of 16 sheets (10 by 8 cm.) of a special paper.[2]

The pads and asphalt are placed in an oven at 54.4° C. (130° ± 1° F.) for about 1 hour to soften the asphalt; a weight is then placed on top of the upper pad. The weight used consists of a circular tin box filled with lead shot to weigh either 50 or 400 grams. (The 3-ounce Gill style deep-pattern ointment box specified by A. S. T. M. Method D5-25 serves very well for this purpose. If the ring and ball softening of the asphalt is less than 76.7° C. (170° F.), the 50-gram weight is used; otherwise the 400-gram weight is used.) The diameter of the circular base of this tin is 5.6 cm. (2.188 inches). When the weight is placed on the upper pad, care is taken that the layers of paper lie as smoothly as possible; the samples are then allowed to remain undisturbed for 5 days at 54.4° C. (130° F.). At the end of this time the stain number is obtained by recording the average of the number of sheets stained above and below the sample, counting the sheets next to the asphalt as No. 1. Duplicate tests should check to within one-half a stain number. The test should not be run on a sample that has been previously overheated and thereby subjected to decomposition.

Discussion

It will be found, with asphalts showing a high stain number, that the last sheets are stained over a smaller area than those closer to the samples. The last sheet will occasionally show a very small stain, but should be counted only when the diameter of the spot is greater than 1.6 mm. (0.0625 inch). This limit has been arbitrarily established because cases have been found where a minute hole in the paper allowed a small amount of the staining oil to pass to the next succeeding sheet. Experience in running the test will develop judgment in evaluatiug such cases.

TABLE I. STAIN NUMBERS FOR ASPHALTS

[About 20 penetration at 25° C. (77° F.), 100 grams, 5 seconds]

Method of Processing	Ring and Ball Softening-Point Range	Stain Numbers 5 Days at 54.4° C. (130° F.) 50 grams	400 grams
Steam refined	Below 65.6° C. (150° F.)	1 or less[a]	.....
Slightly blown	65.6–76.7° C. (170° F.)	1 to 2	.....
Semiblown	76.7–87.8° C.(190° F.)	....	1 to 5
Fully blown	87.8–98.9° C.(210° F.)	....	2 to 9
Fully blown	Above 98.9° C. (210° F.)	....	3 or more

[a] If the asphalt does not stain more than one sbeet, its staining propensity is too small to evaluate in 5 days and a longer time must be used.

Frequently the asphalt will stain more sheets above than below, or vice versa. When this occurs the difference is rarely more than one and the resulting stain number—i. e., the average—is not an integer but is reported to a half number.

The approximate range of stain numbers for different asphalts of about 20 penetration at 25° C. (77° F.), 100 grams, 5 seconds, and different softening points is shown in Table I.

[1] Present address, Columbia University, New York, N. Y.

[2] Tbis special paper was selected after tests on many kinds of tbin paper. In order to get a maximum number of sheets stained in a sbort time, tbe paper must be very tbin. Further, it must not be too dense or it will prevent passage of tbe oily pbase of tbe aspbalt wbicb is responsible for the staining. (Condenser paper about 0.010 mm. tbick was found to be too dense to allow staining of more than one sbeet.) Finally, it must not be too porous and absorbent or tbe asphalt will saturate it, resulting in tbe spreading of tbe staining oil tbroughout the sbeet horizontally instead of vertically tbrougb successive sbeets.

Tbe paper used is 0.015 mm. thick, sbows a densimeter (*1*) reading (100) of 800 to 1000 seconds, and weighs about 7 pounds per 2880 square feet. Tbe paper is tbe regular 4-pound "Washington" grade (cigaret paper) manufactured by Peter J. Scbweitzer, Inc., Elizabetb, N. J. It can be obtained in a 5-pound nubbin roll 26 inches wide, wbicb is sufficient for about 600 tests, for $5.00 per roll. A 50-cm. (about 18-inch) lengtb of tbis paper is folded double five times, clipped at one end, and trimmed down to 10 by 8 cm. If tbis folding is done properly, two separate pads are obtained composed of 16 sheets each, between which the asphalt disk can be placed.

In general, the stain number of a particular asphalt is greater if the test is run at a higher temperature. However, if the temperature of test is too near the softening point, the asphalt becomes more nearly a true solution of the asphaltenes in the petrolenes or malthenes. In this condition the oily material tends to be retained, resulting in low stain numbers. This effect is more pronounced in the slightly oxidized asphalts. Further, as the temperature of test approaches the softening point, the asphalt becomes more fluid (*2*) and spreads out between the pads beyond the periphery of the bottom of the tin. In such a case the weight is not distributed uniformly over the surface of the asphalt. Considering the above factors and the desirability of using one temperature of test, an optimum temperature of 54.4° C. (130° F.) was selected as being most satisfactory. Using this temperature and two optional loads, it is possible to evaluate simultaneously the staining propensities of most plying asphalts over a wide range of softening points.

Figure 1. Typical Stain Number Results, Showing Relative Size of Asphalt Disks

The stain number usually increases as the weight applied is increased. In the case of asphalts with softening points below 76.7° C. (170° F.) and low loads (such as 50 to 400 grams), this increase is not appreciable and the results obtained for a 50-gram load on these asphalts may be compared with those obtained for asphalts of higher softening points under a 400-gram load. (A few experiments have indicated that there is a linear relation between the stain number and high applied loads, such as 400 to 2700 grams, for asphalts showing a high staining propensity.) Asphalts having high softening points will give a smaller surface exposed to a given weight, and consequently the weight per unit area will be greater than for asphalts of lower softening point. However, the increase in the stain number caused by the greater load per unit area for the former can be neglected because the effect on the stain number is about the same as would result from raising the temperature of test so as to obtain the same weight per unit area used with the asphalts of lower softening point.

The relative size of the asphalt disks for two asphalts is shown in Figure 1. The asphalt on the left had a ring and ball softening point of 93.3° C. (200° F.) and showed a stain number of 5.5 in 5 days, under a 400-gram load at 54.4° C. (130° F.). The asphalt on the right had a ring and ball softening point of 75° C. (167° F.) and showed a stain number of 1.5 in 5 days under a 50-gram load at 54.4° C. (130° F.).

Most asphalts show a relatively large proportion of their

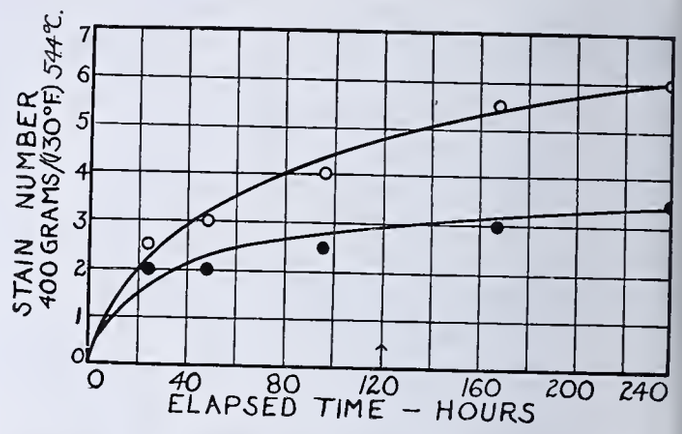

Figure 2. Typical Stain Number–Elapsed Time Chart

staining in the first 75 to 100 hours of the test. This is illustrated in Figure 2. After about 120 hours the rate tends to slow down and the curve flattens out, except for asphalts which show stain numbers above about 8. The length of time for a rapid evaluation of staining propensity has therefore been set arbitrarily at 5 days (120 hours). In general there is sufficient difference between the stain numbers of asphalts at 5 days to evaluate their staining propensity. The difference in stain numbers is accentuated by using a longer time, such as 10 days, for the test, but this length of time is recommended only for asphalts that show a stain number of less than one. The asphalts continue to stain indefinitely; two samples that have been at room temperature under a 400-gram load for one year still show evidence of increased staining but the rate is very slow, as shown in Table II. Asphalts *A* and *B* showed a stain number of 3.5 and 5.5, respectively, for a 5-day test at 54.4° C. (130° F.).

The staining propensity as measured by the stain number is definitely a time function and cannot be accelerated; subjecting disks of asphalts, between various types of paper, to high pressures for a short time did not give the desired information.

Interpretation of the Stain Number

The determination of the stain number is not greatly influenced by the personal element. Although it is not a true quantitative measure of staining, it is more than a qualitative test. When two asphalts *C* and *D* have stain numbers of 6 and 3, respectively, *C* is definitely more staining than *D*. However, *C* does not necessarily exude twice as much oil as *D*, since the sixth sheet of *C* may show only a small stain while the third sheet of *D* may show a large stain.

Table II. Stain Numbers

(Asphalts *A* and *B* at room temperature under 400-gram load)

Elapsed Time, Days	Sheets Stained Asphalt *A*	Asphalt *B*
45	3.5	5.5
51	4	6
70	5	7
114	5	8
194	6	10
258	6	10.5
303	7	11.5
365	7	12.5

Although the stain number measures the rate of staining, it is apparently related to the total amount of oil exuded. The results in Table II indicate that there is more staining oil in asphalt *B* than in *A* because the stain number of *A* is increasing at a much slower rate than that of *B* and appears to be approaching a constant.

When two asphalts are within one-half a stain number ey must be considered as having the same staining propen- y, since this is the limit of accuracy of the test as deter- ined by duplicate runs.

Acknowledgment

The authors wish to acknowledge the assistance of R. N. axler, P. R. Smith, and R. E. Thurn in preparing the manu- ript, and the coöperation of Peter J. Schweitzer, Inc.

Literature Cited

(1) *Proc. Am. Soc. Testing Materials*, Part I, 933 (1936); Tentative Method of Test D202-36T.
(2) Schweyer, H. E., Coombs, C. E., and Traxler, R. N., *Ibid.*, 36, II, 531–43 (1936).
(3) Traxler, R. N., *Chem. Rev.*, **19**, 119–43 (1936).
(4) Traxler, R. N., and Coombs, C. E., *J. Phys. Chem.*, **40**, 1133–47 (1936).

RECEIVED August 13, 1937.

An Electrometric Method for the Determination of Silver

H. ROBINSON AND H. HUGG, Tiffany & Co., Newark, N. J.

N THE potentiometric determination of silver, using potassium iodide as the precipitant, the end-point error ue to adsorption of the reagent by the precipitated silver odide has been eliminated by the method of Lange and Berger 1). However, the length of time required renders the method nsuitable for industrial analysis.

The method described here eliminates this error, and is ast and accurate. The silver, in solution as nitrate, is ti- rated with potassium iodide, using a pair of electrodes which re connected to a microammeter. One electrode is gold, the ther is carbon saturated with nitric acid. The first excess f potassium iodide generates sufficient current through oxida- ion by the nitric acid–carbon electrode to read directly on he microammeter, neither amplifier nor balancing circuit eing required.

Apparatus and Reagents

A microammeter with a range of 0 to 100 microamperes is equired, preferably with a zero center scale.

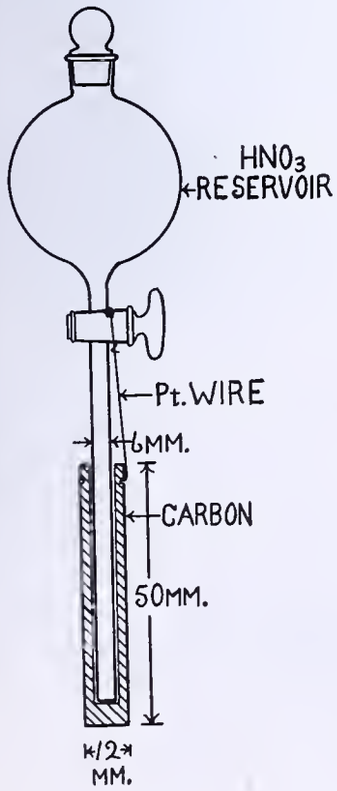

FIGURE 1. CARBON ELECTRODE

The gold electrode may be of any convenient size. The one used by the authors is 2 mm. square by 100 mm. long. Larger gold electrodes allow a larger current flow at the end point, but one of shorter duration. The metal should be well annealed, and cleaned by rubbing with moist pumice powder.

The carbon electrode may consist of a piece of coreless arc- light carbon 12 mm. in diameter. However, if much work is to be done by this method, an electrode may be constructed as illustrated in Figure 1.

The carbon electrode is saturated with nitric acid which has been treated with nitrogen peroxide, made by passing nitric oxide through concentrated nitric acid in an open vessel. Potassium iodide (0.1 N) is used for the titration.

Procedure

The carbon electrode, if solid, should be allowed to soak in nitric acid containing dissolved oxides of nitrogen for about 5 minutes. If the hollow electrode is used, the stop- cock from the nitric acid reservoir is opened until the elec- trode is saturated. In either case, the electrode is prepared for 20 sterling silver assays without further treatment with nitric acid.

The carbon electrode may be saturated with ammonium persulfate instead of nitric acid. Crystallization of the salt renders it less desirable.

The electrodes are connected directly to the microammeter, the carbon electrode being positive at the end point.

One gram of the silver alloy is weighed and placed in a 250-cc. beaker with 5 cc. of 1 to 1 nitric acid, and heated until the metal has dissolved and oxides of nitrogen have been expelled. An excessive amount of nitric acid must be avoided. After cooling, the solution is diluted to 120 cc. and placed under the electrodes. At first a momentary current of 100μa is generated, the meter rapidly returning to zero and remaining there. The mechanical stirrer is started and the titration is begun by allowing the 0.1 N potassium iodide solution to run at the rate of 0.5 cc. per second into the beaker.

The microammeter will not start to fluctuate until the titration has proceeded to within 1 cc. of the end point. At this stage, the addition of each drop will cause the needle to fluctuate, but after each fluctuation it will return to zero, until 0.05 cc. of 0.1 N po- tassium iodide solution in excess has been added. At this point the meter will indicate about 40μa. This flow of current will be constant for 4 minutes with the gold electrode 2 mm. square im- mersed 50 mm. in the solution. An excess of 0.1 cc. will generate 120μa, increasing with added potassium iodide until at 0.7 cc. excess the current generated is 1000μa. Further addition of the precipitant will produce increasing current flow, but with de- creasing gain in proportion to reagent added.

Interfering Elements

Lead, copper, cadmium, nickel, cobalt, and zinc in concentrations as high as 55 per cent have been found not to interfere with the end-point potential nor the accuracy of the method. Suspended metastannic acid, and traces of antimony, aluminum, and colloidal gold have no effect. The presence of iron does not lower the accuracy or sensitivity, but in solution as ferric nitrate it will cause a current flow in the same direction as that generated at the end point, and proportional to the amount of iron present. However, when iron is present the needle of the microammeter may be returned to zero by a balancing current and the titration carried out as usual. Palladium must be absent, as this element is precipitated as iodide in weak acid solutions and is precipitated completely before the end point.

The presence of sulfates renders the end point indefinite. If the sample consists of sulfates or if the sample has been dissolved in concentrated sulfuric acid, the carbon electrode must be saturated with 0.1 N ceric nitrate. Results will be satisfactory if the concentration of sulfuric acid is about 2 N.

Accuracy

The results obtained by this method were checked by the gravimetric chloride method, using 1-gram samples of sterling silver. Some typical results are given.

Gravimetric Chloride %	Electrometric Method %
92.99	93.00
93.01	93.04
93.00	93.03

The method is accurate up to 50° C. Above this temper ture the rapid oxidation produces violent fluctuation of tl microammeter at the end point, with consequent shortenii of the duration of the current flow at the end point. A temperatures below 25° C. the end-point reading of 40μ will remain for 4 minutes.

Summary

A new method for the determination of silver incorporat the following features: It is accurate, precise, and rapi With the exception of palladium none of the usual element present in silver alloys interferes.

No amplifier, balancing circuit, nor reference cell is require (In the exceptional case where iron is present, the balancin circuit must be used.)

Literature Cited

(1) Lange, E., and Berger, R., *Z. Elektrochem.*, 36, 980 (1930).

Received September 27, 1937.

Determination of Carbon and Hydrogen Content by Combustion

MARY W. RENOLL, THOMAS MIDGLEY, JR., AND ALBERT L. HENNE
Ohio State University, Columbus, Ohio

THE purpose of the present paper is to show that carbon and hydrogen determinations by combustion can be performed with a degree of accuracy considerably higher than that which is generally obtained. These improved results are obtained by slight modifications of the ordinary combustion setup, and above all by adequate technic in the burning of the sample.

Apparatus

The equipment used in this laboratory (see Figure 1) follows the design of that described by Smith, Taylor, and Wing (*3*). It has no rubber connections, only three ground joints, and is made entirely of glass. The purifying train consists of tubes sealed in series and containing, 1, copper oxide heated by an external electric resistance; 2, concentrated sulfuric acid acting as a bubble counter; 3, Ascarite; 4, Dehydrite; and 5, phosphorus pentoxide. This train ends in a male half of a 20-mm. standard Pyrex ground-glass joint, 6, and it is mounted on a board to permit its connection to the combustion tube by sliding it in place as one unit. The air which it purifies is received through a calcium chloride tower from a 20-liter bottle from which it is displaced by water. Up to the purifying train, rubber connections are used, but not beyond it.

The combustion tube, 8, is of the shape described by Smith (*3*) but is of Jena Supremax glass (obtained from the Fish-Schurman Co., New York, N. Y.). It contains plain copper oxide held between two rolls of copper gauze. The reason for this change is that combustions are always better regulated with air than with oxygen; however, when air is used, a higher temperature is needed to burn completely the high molecular weight materials used in this laboratory. At the high temperature needed, the life of a Pyrex tube is only one or two combustions, and it frequently adheres to the heating units, thereby ruining them. (New Pyrex glass No. 172 has recently become available; its specifications are very close to those of Jena Supremax, but the authors have not tried it.) The Jena glass is sealed by means of a ring of uranium glass, 7, to the female half of the Pyrex joint, 6, connecting to the purifying train on the one side and to the U-shaped water-condensing tube, 9, preceding the water absorber, 10, on the other.

The absorbers are light tubes containing Dehydrite and phosphorus pentoxide, 10, to absorb the water; and Ascarite with a little Dehydrite and phosphorus pentoxide, 11, to absorb the carbon dioxide. They are connected by small ground-glass joints, coated with vaseline, which is carefully removed with ether before weighing; the body of the absorber is washed with ether and wiped with a clean rag before each weighing.

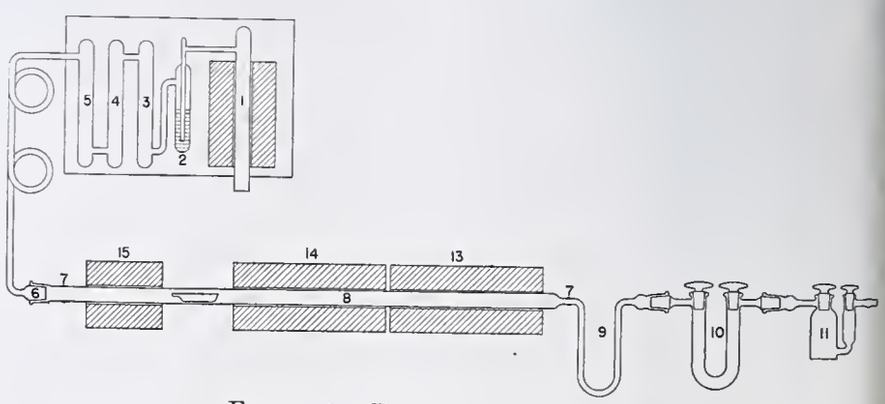

Figure 1. Diagram of Apparatus

s a final precaution, the effluent gases are always bubbled ›ugh white concentrated sulfuric acid. This serves as a surement of the combustion speed and as a check on the com- eness of the combustion, since incompletely burned materials r the acid, thus warning that the results are incorrect and to be arded. If oxygen is used instead of air, the acid invariably ›mes colored.

Procedure

The combustion procedure itself aims essentially at causing slow and steady a combustion as possible. Volatile nples are slowly evaporated, and nonvolatile samples charred progressively without inflammation. The owing procedure generally gives the desired results:

The two long electric units of the combustion furnace, 13 and are heated until the tube is red hot. Air is passed at a speed about 2 bubbles per second, maintained during the whole cedure. After about 15 minutes the absorbers are attached; is passed during half an hour (or a whole hour if the absorbers ve been freshly refilled); the absorbers are then removed, ned, weighed, and reattached. The sample, weighed in an ited platinum boat, is introduced into the cold end of the fur- e in the empty space between the long heating units, 13 and 14, l the short electric unit of the furnace, 15. The hot section uld now be white hot.

The sample is heated gently with a Bunsen burner to cause poration or carbonization; the gas burner is used because it mpractical to supply heat gently enough at this stage by means the short electric unit of the furnace. This phase of the com- stion requires considerable patience, but its correct manipula- n is essential for accurate results; it usually takes from 60 to minutes. When only carbonaceous material remains, the rt electric unit is heated and progressively brought over the nple. Intense heating is continued for 1 to 2 hours. During s time air is passed through the tube at the same steady rate, d causes the water (partially condensed in the U-shaped end the combustion tube) to be carried over into the drying agent. is transfer of water must not be accelerated by heating the U- d of the tube, since the steam thus generated can cause a leak rough the vaseline of the ground joint and carry vaseline into e absorbent.

Samples to be burned should weigh between 0.1 to 0.2 am, determined to 0.01 mg. The absorbed water and rbon dioxide are weighed with the same accuracy. The hole procedure takes from 6 to 8 hours. For a series of mbustions, it is convenient to keep the furnace and purify- g train warm day and night.

Results

Combustion analysis as ordinarily reported seldom yields sults of an accuracy better than 0.2 per cent. The typical sults given in Table I demonstrate how greatly the ac- racy has been improved by the method herein described. vestigation has demonstrated that this accuracy is limited nly by the errors which occur in weighing. Hence, with a mple of 0.2 gram weighed to ±0.01 mg. the maximum rror with five weighings becomes 0.025 per cent with a robable error of 0.01 per cent. This estimation is borne ut by comparing the results with calculations in the cases f synthetic rubber, benzoic acid, and triphenylcarbinol. The unknown quantity of oxygen in natural rubber inter- eres with the correlation. Also a higher hydrogen-carbon atio is indicated for natural rubber than C_5H_8, which has een repeatedly verified (*2*, *3*). The same high hydrogen- arbon ratio holds true in hydro-rubber. Sucrose is a ma- erial in which dehydration starts before desiccation is com- lete; the results obtained thus indicate an excessive re- oval of water in drying the particular sample.

The close checking of several runs should be noted.

This degree of accuracy substantially permits the deter- nination of one more or less hydrogen atom in a molecule ontaining 1000 carbon atoms.

Results are almost uniformly good, after the operator has gained some practice. For routine analyses which are regularly carried out by students, the same technic is used but weighings are done to only 0.2 mg.

Table I. Typical Results.

	Calculated		Measured	
	C	H	C	H
Synthetic rubber $(C_5H_8)_n$	88.16	11.84	88.17 88.17 88.17	11.82 11.83 11.83
Natural rubber $(C_5H_8)_n O$?	88.16	11.84	88.07 88.07	11.86 11.86
Hydro-rubber $(C_5H_{10})_n$	85.62	14.37	85.59 85.58	14.39 14.40
Benzoic acid	68.84	4.95	68.84 68.83	4.94 4.95
Sucrose	42.10	6.48	42.17 42.16	6.49 6.50
Triphenylcarbinol	87.65	6.20	87.63	6.20

No sulfur compounds have been tried. Some chlorinated materials have been successfully analyzed with the use of electrolytic silver wool, supplied by Dr. McNevin of this department. This phase of the work will be presented by Dr. McNevin in the near future; the authors' own experience should still be regarded as limited.

Discussion

In beginning this work the then conventional atomic weights of O = 16.000, C = 12.00, and H = 1.008 were adopted. Experimental data indicated a uniform and average deficiency of total recovery of 0.03 per cent. Likewise the hydrogen-carbon ratios were inclined to be high. A careful recapitulation of possible errors failed to disclose any cause. It was then recognized that the value 12.00 for carbon was less accurate, by a decimal point, than the check results obtainable. It was therefore held proper to assume a value for carbon which would yield consistent results. Table II gives the results of computations on the data derived from synthetic rubber. It will be seen that C = 12.005 corrects the previously observed deficiency. This value has been used in all the results reported herein.

Table II. Synthetic Rubber

	Hydrogen	Carbon	Total (Average)
C = 12.000	11.82, 11.82, 11.83	88.14, 88.14, 88.14	99.97
C = 12.005	11.82, 11.83, 11.83	88.17, 88.17, 88.17	100.00
C = 12.010	11.82, 11.83, 11.83	88.19, 88.19, 88.20	100.02

No contention is made that this value of 12.005 is a determination of the atomic weight of carbon. It may well be that it is merely a correction factor for some regular, but not recognized, error. On the other hand, the newer experimental values for carbon reported during the past 2 years indicate 12.007, while Baxter and Hale (*1*) report 12.009 measured by much this same combustion method on much larger samples.

Summary

This paper shows that by simple improvements of the customary combustion apparatus, and patient burning of the sample in air instead of oxygen, results are obtained for carbon and hydrogen which are accurate to 0.01 per cent.

Literature Cited

(1) Baxter and Hale, *J. Am. Chem. Soc.*, **58**, 510 (1936).
(2) Midgley, Henne, Shepard, and Renoll, *Ibid.*, **57**, 2318 (1935).
(3) Smith, Taylor, and Wing, *Bur. Standards J. Research*, **10**, 479–92 (1933).

Received September 13, 1937.

Determination of Moisture in Wood Chips, Sawdust, and Pulp

A. J. BAILEY, Agricultural Experiment Station, University of Minnesota, St. Paul, Minn.

A COMMON and standard method (*3*) of determining moisture in wood and similar plant material consists of refluxing with toluene, the toluene returning to the distilling flask and the water being retained in a trap. By employing a noninflammable liquid of higher boiling point, safety and speed may be increased, while the method is suitable for routine work in the hands of an unskilled worker.

Apparatus and Reagent

Tetrachloroethylene is admirably suited to this determination, having a boiling point of 118.5° C. and being noncombustible. The apparatus and technic of the determination with this liquid are only slightly modified from the standard procedure. The proposed method consists of boiling the wet material in tetrachloroethylene, condensing the vapors in a reflux condenser and returning them to a trap from which the tetrachloroethylene is drained to the distilling flask, leaving the water layer in the graduated trap.

The apparatus (Figure 1) consists of a wide-necked flask, a Liebig condenser, a moisture trap, and a drying tube. The size of the flask depends on the bulkiness of sample used, but should preferably be of 500- to 1000-ml. capacity. The moisture trap follows the general plan of that proposed by Dean and Stark (*2*) and Bidwell and Sterling (*1*), but the total capacity should be 50 to 100 ml. instead of the usual 10 ml. The exact size of the trap is not important as only its lower, narrow portion need be graduated. The side tube of the trap is bent parallel and close to the trap body, on the bottom of which a stopcock is sealed.

A two-hole rubber stopper connects the stopcock and vapor tube to the distilling flask. Because of the high specific gravity of the tetrachloroethylene (1.608), the water layer floats; hence, the necessity of draining the tetrachloroethylene to the flask to trap the water. A drying tube at the top of the condenser prevents moisture condensation from atmosphere of high relative humidity. The interior of the condenser tube should be cleaned with hot chromic-sulfuric acid cleaning solution before use to minimize the retention of water drops after the distillation.

Procedure

After the sample has been added to the flask, the trap and condenser are attached, and tetrachloroethylene is poured down the condenser until a normal space is left above the floating sample for vapor disengagement. A drying tube and electric heater are attached, and a constant rate of boiling is established. The stopcock is then opened slightly to return the tetrachloroethylene to the flask as fast as it distills, in order to keep the lighter water from running back down the vapor tube. All water is usually driven off in 0.5 to 0.75 hour. After the boiling is stopped, the condenser is wiped with a tube brush on a ramrod, while simultaneously a small quantity of tetrachloroethylene is poured down to remove adhering drops of water. By opening the stopcock, all tetrachloroethylene is returned to the flask, and the volume of water is read directly and calculated to percentage moisture content.

Precision

The method was checked against moisture contents determined by oven drying and by the standard toluene method. Values obtained by the proposed method and the toluene method on wood chips, wood sawdust, and wood pulp were practically the same. The differences between the values obtained by the proposed method and by oven drying were in close agreement with the differences between the toluene method and oven drying. Hence, in accuracy and precision the new method is equivalent to the toluene method. On the basis of a sample of 100 grams dry weight and duplicate wat volumes in the trap agreeing to within 0.1 ml., a precision about one part in a thousand was indicated. With the m terial examined, no interfering substances were found; turpe tine, resin, and volatile oils were soluble in the tetrachlor ethylene. Naturally, the precision is dependent upon t moisture content and size of sample.

Discussion

The proposed method is handicapped by slightly high reagent cost, although the difference is minor, especially whe nearly complete recovery can be effected. Presence of som water-soluble volatile liquids, such as ethanol and glycerol, i the method were applied to material containing these, woul result in error, but of less magnitude than with toluene. I would appear that water of crystallization would be drive off as in the toluene method.

The technical skill required for the determination is th same as that required for the toluene method. As far as i known, decomposition of carbohydrates, involving eithe liberation or imprisonment of water, does not occur. Owin to the high density of the tetrachloroethylene, samples are not exposed to the superheating that occurs in the toluene distillation; hence, there is no possibility of the sample's sinking to the bottom where burning (and water formation) are likely to occur. The method is more accurate than the usual oven drying, which measures volatile substances such as turpentine and volatile oils by loss of weight, whereas the proposed method measures water directly. The time required is a little less than that using toluene.

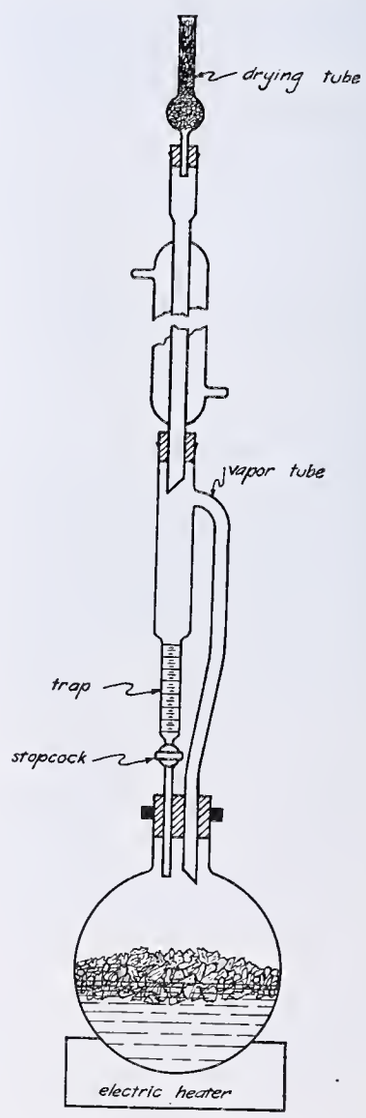

FIGURE 1. APPARATUS

In view of the absence of oxidation or other detrimental effects on the sample, the method should be applicable to a wide variety of biological and organic materials. The simple apparatus and manipulation should recommend its adoption for control work by laboratory assistants. Emphatic recommendations for its general adoption are the complete freedom from the fire hazard that is encountered in using toluene, turpentine, naphtha, etc., and the ease of reading the meniscus, since only

water-air meniscus is read, obviating the necessity of alibrating the graduated trap for a water-toluene niscus.

Summary

A method of determining the moisture in wood and pulp distilling with tetrachloroethylene substituted for toluene proposed. Common apparatus suffices, only a slight modi-ation of the standard equipment being necessary, while the plicity of the technic of the determination lends itself to tine work. The accuracy and precision of the method are nearly identical with the toluene method, while time is reduced and fire hazard is completely eliminated.

Literature Cited

(1) Bidwell, G. L., and Sterling, W. F., Ind. Eng. Chem., 17, 147 (1925).
(2) Dean, E. W., and Stark, D. D., *Ibid.*, 12, 486 (1920).
(3) Tech. Assoc. Pulp Paper Ind., Tentative and Official Testing Methods, Recommended Practices, Specifications, T3m (1934).

Received October 2, 1937. Contribution from the Division of Forestry in coöperation with the Division of Agricultural Biochemistry. Published with the permission of the Director, Agricultural Experiment Station, University of Minnesota.

Determination of Small Quantities of Arsenic in White Metals

A Bromate Titration Method

C. W. ANDERSON, Continental Can Company, Inc., Chicago, Ill.

N MOST established methods for the determination of arsenic in metals and alloys the sample is dissolved in ncentrated hydrochloric acid with the addition of potassium lorate. The arsenic is then separated by adding to the solu-n sodium hypophosphite (*1*) or stannous chloride (*4*), and termined by dissolving in an excess of standard iodine solu-n and titrating the excess with a standard sodium arsenite lution. Calcium hypophosphite (*3*) is also being used for e separation of arsenic. The time required for an analysis these methods is indicated to be at least 2 hours.

In the present method calcium hypophosphite is used to parate the arsenic from a bromine–hydrochloric acid solution the metal. The arsenic is then dissolved in hot concen-ated sulfuric acid and reduced with sodium sulfite, the ex-ss sulfur dioxide is expelled, and the solution, containing senious acid, is titrated with standard potassium bromate lution. The time required for a tin or bearing metal analysis less than 1 hour, and for a lead analysis, less than 2 hours. oncurrent results are obtainable when two or more analyses e carried through on the same metal. Experimental analy-s performed with metals of known arsenic content, to which arious amounts of pure arsenic are added, yield recoveries hich are in accord with those obtainable by established ethods. Calcium hypophosphite is an excellent reducing gent for separating arsenic in white metal analyses. Table gives the experimental data obtained in determining the rsenic content of a sample of antimony. These analyses ow that in the presence of large amounts of antimony, there no interference by this metal when using calcium hypo-hosphite for arsenic separations.

Solutions and Reagents Required

Bromine Solution. Dissolve 12 ml. of pure bromine in 100 ml. f concentrated hydrochloric acid by shaking vigorously in a lass-stoppered bottle.

Calcium Hypophosphite Solution. Dissolve 15 grams of lcium hypophosphite in 100 ml. of water to which has been dded 5 to 10 ml. of concentrated hydrochloric acid.

Cuprous chloride and anhydrous sodium sulfite.

Methyl Orange Indicator. Dissolve 0.1 gram of methyl range powder in 100 ml. of hot water and filter.

Potassium Bromate Solution, 0.015 *N*; 1 cc. = 0.5622 mg. f arsenic. Weigh 0.4175 gram of the salt, dissolve in water, and ake up to volume in a liter flask. This solution should be tandardized against pure arsenic trioxide. A quantity of the rioxide, 0.01485 gram, is weighed, then dissolved in 2 or 3 drops of a saturated solution of sodium hydroxide, water and sulfuric acid are added, and the titration is carried out as in the regular analysis. This quantity of the trioxide requires 20 ml. of the bromate solution.

Table I. Arsenic Determinations on a Sample of Antimony

Weight of Sample	Arsenic Originally Present	Arsenic Added	Total Arsenic Present	0.015 *N* $KBrO_3$	Arsenic Found
Gram	*Mg.*	*Mg.*	*Mg.*	*Ml.*	*Mg.*
0.30	...	...	...	0.55	0.309
0.30	...	...	...	0.55	0.309
0.30	0.309	0.50	0.809	1.45	0.815
0.50	0.515	0.675	1.19	2.15	1.209

Gooch Microcrucibles of about 1.5-ml. capacity (Gooch microcrucibles can be purchased from the Wilkens Anderson Company, or the Central Scientific Company, Chicago, Ill.).

Specially Prepared Asbestos (*2*) for the Gooch crucibles for filtering the arsenic. Medium-fiber asbestos is shaken in a bottle with a solution of one part of the bromine–hydrochloric acid mixture and seven parts of water. It is allowed to stand a few hours and diluted with an equal volume of water. When used in the Gooch crucible the excess bromine is washed out by one or two washings with water. High and erroneous results are obtained if ordinary asbestos is used without this treatment.

Procedure for Tin and Bearing Metals

Weigh a 1.0-gram sample of filings into a 100-ml. beaker. With a cover glass over the beaker, add a mixture of 5 ml. of 1 to 1 hydrochloric acid and 12 to 15 ml. of the bromine–hydrochloric acid solution. Allow to stand 1 or 2 minutes and then place over a small flame to complete solution of the metal. Add 0.3 to 0.5 gram of cuprous chloride, and after it is dissolved add 5 to 10 ml. of calcium hypophosphite solution and place the beaker over the small flame again. A brownish black suspension of finely divided arsenic will form after a few seconds. Cuprous chloride acts as a catalyzer in the precipitation of the arsenic.

Continue heating, finally allowing the solution to boil gently for 10 to 15 minutes to cause the precipitate to become coarser for more convenient filtration. Filter the solution through a Gooch microcrucible, using an aspirator or the vacuum line. Wash the beaker twice with a little concentrated hydrochloric acid, allowing it to flow through the crucible. Follow this by two or three washings with water. Transfer the crucible to a Pyrex test tube of about 1.8 cm. inside diameter and 15 cm. in length. Add 3 ml. of concentrated sulfuric acid and shake carefully to loosen the asbestos layer holding the arsenic. Insert the test tube into the flame of a Méker burner and hold there 10 to 15 seconds or until all the arsenic is dissolved. Allow to cool, add a few milliliters of water, and mix the contents by shaking. Cool again and wash the

TABLE II. RESULTS OF EXPERIMENTAL ANALYSES

Sample	Weight of Sample	Arsenic Originally Present	Arsenic Added	Total Arsenic Present	0.015 N $KBrO_3$	Arsenic Found	Error	Per Cent Recovery
	Grams	*Mg.*	*Mg.*	*Mg.*	*Ml.*	*Mg.*	*Mg.*	
Pure Arsenic	..	...	1.25	...	2.25	1.265	+0.015	101.2
	..	...	1.50	...	2.60	1.462	−0.038	97.5
Bureau of Standards sample No. 54, tin-base bearing metal	1.0	0.50	...	...	0.90	0.506	+0.006	101.2
	1.0	0.50	0.25	0.75	1.35	0.759	+0.009	101.2
	0.5	0.25	0.275	0.525	0.95	0.534	+0.009	101.7
	0.5	0.25	0.40	0.65	1.20	0.675	+0.025	103.8
	0.5	0.25	0.75	1.00	1.80	1.012	+0.012	101.2
Continental Can Company, tin No. 1	1.0	...	...	...	0.95	0.534	.....	...
	1.0	0.534	0.30	0.834	1.45	0.815	−0.019	97.7
Another tin sample, No. 2	1.0	...	...	...	0.85	0.478	.....	...
	1.0	0.478	0.50	0.978	1.75	0.984	+0.006	100.6
Continental Can Company lead	2.0	...	...	...	0.40	0.225	.....	...
	1.0	0.112	0.30	0.412	0.70	0.394	−0.018	95.6

contents of the test tube into a narrow-form 180-ml. Pyrex beaker, diameter 3.5 to 4.0 cm., and wash the last traces of solution from the tube with water.

To the solution and crucible in the beaker, volume 15 to 20 ml., add 10 mg. of anhydrous sodium sulfite. Mix by a gentle shaking or swirling, cover with a watch glass, and place over a small flame until gentle boiling begins. Now allow a fairly rapid stream of air, three or four bubbles per second, to pass through the solution for 1 minute. Wash off the cover glass and sides of the beaker, add a drop of methyl orange indicator, and titrate with 0.015 N potassium bromate solution. Add the bromate drop by drop from a 10-ml. buret, graduated in 0.05-ml. divisions, to the disappearance of the pink color of methyl orange. From the final buret reading deduct 0.10 ml., this being the amount of the blank titration for the reagents used. It is advisable to determine the reagent blank occasionally.

Procedure for Lead Analysis

Weigh a 2-gram sample of 80-mesh filings into a 150-ml. beaker. Add the bromine–hydrochloric acid alone without any dilution with water or hydrochloric acid, the solution of this metal proceeding somewhat slowly even when t most reactive solution is used. The ti required for solution of 2 grams of metal is about 1 hour. Care must be ercised to maintain some excess of f bromine during the process of solution avoid loss of arsenic by the formation the volatile trichloride. From this st the process is continued as given above tin and bearing metals. When the arse has been precipitated, the solution filtered while hot to avoid difficulty caus by the crystallization of lead chloride.

Bureau of Standards sample No. 5 a tin-base bearing metal contai ing tin 88.24, antimony 7.33, copp 3.75, lead 0.56, bismuth 0.05, a arsenic 0.05 per cent, was used as sample for reference in the development of this method. the experimental analyses the arsenic added was taken fro a solution prepared from Bureau of Standards arsenic trioxid In the two experiments using pure arsenic alone, the regul course of analysis was followed. The larger deviation in t second experiment is an amount of arsenic less than that which 0.10 ml. of the bromate solution is equivalent. In the other experimental analyses the error is less than t arsenic value of 0.05 ml. of the bromate solution.

Literature Cited

(1) Brandt, *Chem.-Ztg.*, 37, 1445, 1496 (1913).
(2) Evans, S. B., *Analyst*, 57, 492 (1932).
(3) Fogel'son, E. I., and Kalmuikova, N. V., *Zavodskaya Lab.*, 584–6 (1936).
(4) Ibbotson, F., and Aitchison, L., "Analysis of Non-Ferro Alloys," p. 125, London, Longmans, Green & Co., 1915.

RECEIVED October 11, 1937.

Cellulose Analysis

A Comparison of Three Principal Methods

J. DAVID REID AND D. F. J. LYNCH
U. S. Agricultural By-Products Laboratory, Iowa State College, Ames, Iowa

THE cellulose work of this division is concerned with the utilization of fibrous farm by-products as a source of cellulose. An accurate method of estimating cellulose, as well as a comparison of the values obtained by analysts using different methods, is desired. The present investigation was accordingly carried out in the following manner: Four representative farm wastes—namely, wheat straw, rye straw, bagasse and cornstalks, and spruce wood of 40- to 60- and 60- to 80-mesh fineness—were analyzed for cellulose by three different methods and the resulting crude celluloses were analyzed for pentosan, lignin, ash, and alpha-cellulose.

The numerous methods of cellulose analysis need not be critically reviewed here. This has been thoroughly and capably done by Renker (*16*) and others. These methods fall mainly into two groups: those which hydrolyze cellulose leaving the accompanying substances, and those which oxidize and remove the associated substances leaving cellulose. Since this division is interested in the preparation of cellulose, particularly alpha-cellulose, the first group was not considered. A review of these methods, particularly that of Kiesel and Semiganovsky (*7*, hydrolysis of cellulose and titration of the resulting glucose) is given by Kalomanovitch and Kalotireva (*6*).

On the basis of Renker's (*16*) critical investigation, Th International Commission on Applied Chemistry (1909 recognized the methods of Cross and Bevan (*4*) and of Müller (*13*) as being the most accurate.

The greater convenience of the former method over the latter has established it or one of its numerous modifications as practically a standard method. Three promising methods, as to accuracy and rapidity of manipulation, for determining cellulose in fibrous materials have been developed since the original Cross and Bevan method was published. They are as follows:

The chlorine dioxide method of Schmidt (*17*); this method was not used in the present studies for the reason that the explosive nature of chlorine dioxide renders its use undesirable for routine analyses in the laboratory.

The Norman and Jenkins (*14*) method which involves the use of sodium hypochlorite solution.

The Kürschner and Hoffer (*9*) method which is based upon the use of nitric acid and alcohol as a reagent.

The latter two methods and the Cross and Bevan method, with certain modifications, were selected for study in this investigation.

Experimental

SAMPLES. Bagasse, cornstalks, rye straw, wheat straw, l spruce wood were selected as representative materials. ley were ground in a Wiley mill (*21*) to pass through a 40-sh sieve and be retained on a 60-mesh sieve. An additional ple of spruce wood flour was prepared to pass through a 60-sh sieve and be retained on an 80-mesh sieve. Since wood the latter size is usually taken for analysis, it was felt that h sizes should be used. (The results did not vary greatly the two sizes.) The spruce samples were given a pre-inary extraction with benzene-alcohol (60–40) mixture to ove resins. Every effort was made to obtain uniform nples. The cornstalks were particularly difficult to handle ause of sand embedded in the stalks.

The samples are not truly representative of the plant ma-ial selected. For example, the bagasse had received a chanical cleaning treatment with sieving and the fiber tion was further segregated by the grinding in the Wiley ll and sieving again to obtain the selected samples. This is denced by the abnormally high cellulose and lignin con-ts of the bagasse samples.

The sieved material was kept in sealed mason jars until it s required. Then thirty-five samples, a number sufficient the entire analysis, were prepared and stored in weighing tles until used.

PROCEDURE. Jena fritted-glass crucibles (No. 1-G3), capacity cc., were used. The disks had pores ranging from 20 to 30 crons in diameter. An average loss of about 0.0020 gram per cible per determination was noted in the Cross and Bevan l Norman-Jenkins methods, due, probably, to solvent action the hot alkaline liquors on the glass. No correction was made this loss (about 0.2 per cent) as was done by Menon (*12*). en-dried samples were not used for analysis, the moisture con-ts being determined on separate samples. Six to eight 2-m samples were weighed out and the cellulose was determined one of the three methods given below. The pentosan content s determined on three of these samples as well as on the original terial by the official A. O. A. C. (*1*) 12 per cent hydrochloric d method. Ash was determined on one sample at low red t. (Two samples were used if the ash were high.) Lignin terminations were made on one or two samples by the fuming drochloric acid method (*2*) but no correction was made for rogen.

The average of these impurities (ash, lignin, pentosans) was culated and subtracted from the crude cellulose value to give e value designated as "pure cellulose." It was necessary to at large samples (5 to 6 grams of material in each case) so that alpha-cellulose determination could be made on one portion d a moisture determination on another portion. Special ap-ratus was used in the case of the large Cross and Bevan samples. pha-cellulose determinations were made on the resulting cellu-es according to the method described by Schorger (*18*), except t fritted-glass crucibles were used instead of the alundum ones commended. Practically no loss due to the action of the dium hydroxide solution on the glass was found in these alpha-lulose determinations, probably because the solution was cold d was in contact with the crucible for only a very short time.

DEFINITIONS. The terms used in this paper are defined as llows:

"Crude cellulose" is that portion of the plant material re-aining after treating according to one of the above-mentioned ethods of cellulose analysis in each case.

"Pure cellulose" is the crude cellulose after correction for its h, pentosan, and lignin content.

"Alpha-cellulose" is that portion of the "crude cellulose" re-aining after treatment in the prescribed manner with 17.5 per nt sodium hydroxide solution and correcting for ash content.

Methods and Apparatus

CROSS AND BEVAN. The apparatus used for the 2-gram mple was a slight modification of that used by Sieber and alter (*19*) as described by Phillips (*15*). The procedure as that described by Phillips, except that no permanganate ter-bleach was used and the cellulose was not given a final wash with alcohol, because of the strong adsorptive power of cellulose for alcohol (*20*), but it was removed from the crucible and digested thoroughly with 100 cc. of water in a beaker. Otherwise, the method was the usual one of alternate chlorination and extraction with 2 per cent sodium sulfite solution.

The final filtration of the Cross and Bevan cellulose as well as each of the Norman-Jenkins filtrations, using the fritted-glass crucible, gave considerable trouble unless the suspension was stirred well and poured into the crucible, allowing it to settle a little before turning on the suction. This forms a mat, preventing the fine material from clogging the fritted-glass filter. No trouble was encountered in the filtration of Kürschner-Hoffer cellulose.

A special apparatus, which proved very satisfactory, was developed for the analysis of the large 6-gram samples, as shown in Figure 1.

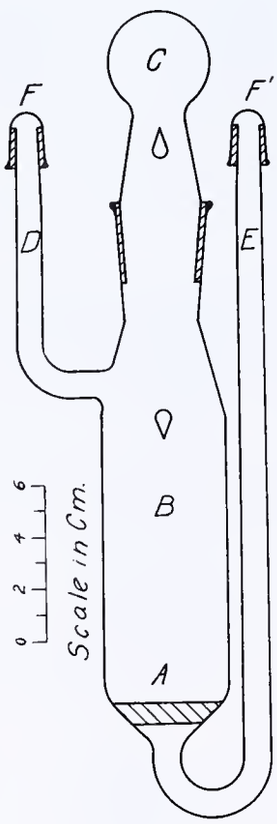

FIGURE 1. APPARATUS FOR LARGE SAMPLE CROSS AND BEVAN DETERMINATIONS

The apparatus is useful because large samples up to 10 grams in weight may be treated at one time. The apparatus consisted of a sintered-glass disk, *A*, sealed into a glass tube, *B*, which is 45 mm. in diameter and 145 mm. long. The top, *C*, was made from a 29/42 standard ground-glass joint and was held on by springs hooked to small glass lugs. Two tubes, *D* and *E*, were sealed on as shown. Two caps, *F* and *F'*, were ground onto the arms, *D* and *E*, so that the apparatus could be made air-tight for weighing. A piece of Nichrome wire was put around the tube in such a way as to support the long arm and also serve as a sling for weighing.

The sample was weighed into the flask and wetted. Chlorine was introduced at *D* and suction applied at *E*. Alternatively, chlorine may be introduced at *E* and drawn up through the sample. The springs holding the top, *C*, should be weak, so that if chlorine pressure develops inside, the top will not crack when it snaps back into place. A drop of glycerol should be used as lubricant for the ground-glass joints. This is easily washed out before weighing. The sample was washed and heated in sodium sulfite solution in the usual manner. Liquids were drawn off by attaching a suction flask to *E* by means of an L-shaped glass tube and a small piece of rubber tubing and applying suction. Large samples were weighed in the apparatus by using a balance of suitable capacity. The 6-gram samples were generally reduced in size by the pulping action so that they could be removed quantitatively and weighed in the fritted-glass crucibles used for the smaller determinations.

Except for the correspondingly larger amounts of solutions, the same procedure was used on both large and small samples.

NORMAN-JENKINS METHOD. The Norman-Jenkins (*14*) method was used with the following slight modifications:

Sets of four samples were boiled for 30 minutes in 2 per cent sodium sulfite solution, maintaining the volume with hot water, and using a four-spindle motor stirrer to avoid bumping.

For the two alkaline chlorinations, the material was suspended in 90 cc. of water and 14 cc. of sodium hypochlorite (5.3 per cent available chlorine) were added. The 5.3 per cent solution was substituted for the 15 per cent recommended because it was found that the strong commercial hypochlorite (15 per cent available chlorine) obtained from laundry supply companies in gallon lots decomposed rather rapidly even in the cold. It was more satisfactory to buy pint bottles of the more dilute hypochlorite (5.3 per cent available chlorine) sold in grocery stores. Similar solutions were found by Cooper (*3*) to lose about 0.09 per cent of their original available chlorine content per day. The hypochlorite

was diluted to 3 per cent available chlorine content and 5 cc. were mixed with 2 cc. of 20 per cent sulfuric acid in 100 cc. of water for the acid chlorinations.

KÜRSCHNER-HOFFER METHOD. The Kürschner-Hoffer method (*9*) was modified and carried out as follows:

The special apparatus shown in Figure 2 was made by sealing off the outer portion of a 50/50 interchangeable ground-glass joint and sealing the inner portion to a Pyrex condenser as shown. A trace of glycerol was used as lubricant in the seal. For large samples, a 66/60 joint was used, the lower part of it measuring about 60 × 200 mm. A 2-gram sample was weighed into the flask, 100 cc. of reagent (made by adding 20 cc. of concentrated nitric acid, specific gravity 1.4, to 80 cc. of 95 per cent ethyl alcohol) were added, and the mixture was refluxed for 1 hour. A small constant-level boiling water bath was constructed. The opening of the cover should be of such diameter that it will act as a support for the flask, fitting just under the bulge found in the glass joints.

After 1 hour's refluxing, the mixture was emptied into a beaker and then filtered in a fritted-glass crucible, using a small amount of alcohol from a wash bottle to aid the transfer. The crucible was placed in the flask using a pair of tongs (preferably of Monel metal or stainless steel) and the reagent was added. In the case of dense material such as wood, it was necessary to remove it from the crucible with a spatula before placing the crucible in the flask in order to assure good penetration. (If it is desired not to put the crucible in the flask, the material may be washed out, using exactly 80 cc. of alcohol in a small wash bottle, and the acid added afterward.) One hundred cubic centimeters of the nitric acid–alcohol reagent were added and the whole procedure was repeated a third time.

Three 1-hour refluxes were selected empirically rather than the usual test for lignin because there is generally some lignin left after two refluxes, while most of the lignin is removed by 3 hours' refluxing, thus giving a sample of more constant composition. After the third reflux the cellulose was transferred to the fritted-glass crucible by using a rubber policeman and alcohol from a wash bottle. The cellulose must be carefully washed with alcohol, preferably by letting each portion of alcohol remain in contact with the cellulose a short time before removing by suction. It is dried in the oven at 105° C. and weighed with the crucible in a weighing bottle. Care should be taken not to allow the alcohol in the filter flask to evaporate to dryness, as some of the nitrated material may be explosive. Crude alcohol may be recovered by neutralizing with technical sodium hydroxide and distilling.

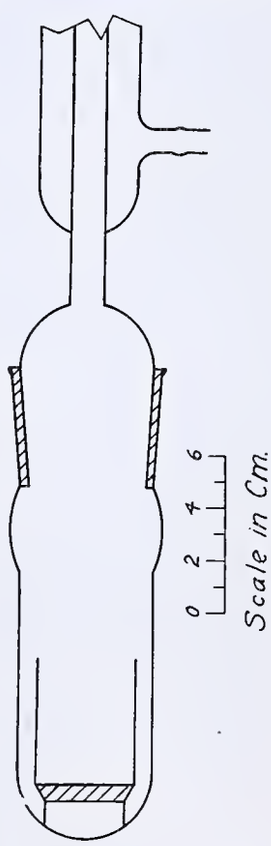

FIGURE 2. APPARATUS FOR KÜRSCHNER-HOFFER DETERMINATIONS

Results and Discussions

The results of the analyses are given in Table I. A comparison of the figures on "crude cellulose, corrected for ash" shows that the Cross and Bevan and Norman-Jenkins results are approximately the same, while the Kürschner-Hoffer figures are about 85 to 95 per cent of the Cross and Bevan values. This difference is less, however, when the resulting celluloses are corrected for impurities. The figures "pure cellulose in original" show the Kürschner-Hoffer cellulose to be about 95 per cent as large as that of the Cross and Bevan cellulose.

The Kürschner-Hoffer figures for "crude cellulose, corrected for ash" are closer to the Cross and Bevan "pure cellulose" figure than are either the Cross and Bevan or Norman-Jenkins "crude cellulose, corrected for ash." That this may be a fortuitous circumstance is possible. These analyses show that the "pure cellulose" obtained from the Kürschner-Hoffer process is 0.7 to 10.6 per cent, averaging about 4 per cent lower than that obtained by the Cross and Bevan method—that is, if the "pure cellulose" figure of the Kürschner-Hoffer pulp is subtracted from the Cross and Bevan "pure cellulose" and then divided by this figure, the percentage loss of cellulose (about 4 per cent) due to the more drastic conditions of the Kürschner-Hoffer method over that of the Cross and Bevan method is found. This loss combined with the naturally smaller pentosan and lignin content, makes the Kürschner-Hoffer "crude cellulose, corrected for ash" figure considerably closer to the Cross and Bevan "pure cellulose" than the Cross and Bevan "crude cellulose, corrected for ash" figure.

A further examination of the table with relation to the alpha-cellulose figures and an application of calculations similar to those above reveal that while the average loss of "pure cellulose" is 4 per cent, the Kürschner-Hoffer alpha-cellulose is 15 to 24 per cent (average about 20 per cent) lower than the Cross and Bevan alpha-cellulose. Since the alpha-cellulose determination is entirely empirical, it is probable that the alpha-cellulose analyses of Kürschner-Hoffer and Cross and Bevan celluloses are not strictly comparable. (The alpha-cellulose determinations on the Cross and Bevan and Norman-Jenkins celluloses are apparently more comparable.)

This difference of the Kürschner-Hoffer cellulose may be due to either physical or chemical differences in the pulp or both. Korsheniovsky (*8*) found that cotton linters lost their fibrous structure when treated by the alcohol–nitric acid reagent. He stated that this was probably due to the fact that the cellulose was not sufficiently protected by encrustants. This decomposition was not found in the present samples. Instead, the encrustants were apparently dissolved out in such a way that the fibrous particles retained their shape. Under the microscope the particle appears to be a translucent bundle of fibers. This structure would give the particle greatly increased surface. Lynch (*11*) has shown that the state of division makes considerable difference in the solubility of cellulose in hot 7.14 per cent sodium hydroxide, but that the difference is small, though constant, with 17.5 per cent sodium hydroxide solution. In this case it is possible that the greatly increased surface may have increased the solubility of the cellulose but probably not as much as 20 per cent.

Lewis and Laughlin (*10*) have also criticized the Kürschner-Hoffer method and found 0.25 to 0.5 per cent of nitrogen in the cellulose. However, these investigators found little drop in the copper number, thus indicating that not much oxycellulose was formed. On the other hand, they found that the viscosity of Kürschner-Hoffer cellulose was considerably lower than that of Cross and Bevan cellulose. In the light of the recent researches of Farr (*5*), this latter fact may mean only that a greater portion of the pectin-containing cementing substance has been removed by the nitric acid than by chlorination. This would explain the decrease in viscosity, since Farr claims that viscosity is due almost entirely to the pectin substance and not to the size of the cellulose molecule. Since nitric acid may hydrolyze the pectin or form soluble nitropectin, or the oxalic acid formed in the reaction may react with the pectin, it might thus very well remove some of the cementing substance. One is then inclined to speculate on whether this removal may then affect the alpha-cellulose results, causing them to be so low. Thus, the increased solubility of the Kürschner-Hoffer cellulose may be due either to physical differences, such as increased surface or removal of the protective coating, or to chemical changes such as actual degradation or nitration of the cellulose molecule.

The Cross and Bevan and Norman-Jenkins methods are

pproximately equal, in the authors' opinion, as far as conenience is concerned. Both, exclusive of weighing, require out 2.25 hours' manipulation time. It is, however, conderably more convenient to use sodium hypochlorite solution stead of gaseous chlorine. The Kürschner-Hoffer method is ery much more convenient to use than either of these methds. Manipulation time is about 1 hour or less than half that quired for either of the other methods. The cost of reents for the Kürschner-Hoffer determination is greater than at for the others, but this cost is so small that the time and bor saved greatly overbalance it.

ABLE I. DATA OBTAINED BY SUBJECTING PLANT MATERIALS TO ANALYSIS

(Cross and Bevan, Norman-Jenkins, and Kürschner-Hoffer methods, respectively[a])

	Wheat Straw, 40–60 Mesh	Rye Straw, 40–60 Mesh	Bagasse, 40–60 Mesh	Corn-stalks, 40–60 Mesh	Spruce Wood 40–60 mesh	Spruce Wood 60–80 mesh
	%	%	%	%	%	%
	Original					
oisture	7.84	6.33	4.45	7.64	Nil[b]	Nil[b]
entosan	19.8	20.5	17.7	19.6	12.1	12.0
sh	4.89	6.30	0.82	7.58	0.90	0.74
ignin	17.2	13.3	24.0	15.7	28.0	27.7
	Cross and Bevan					
rude cellulose	55.4	48.5	64.5	40.5	52.4	51.4
sh in crude cellulose	2.00	1.83	1.30	2.20	1.80	1.28
rude cellulose corrected for ash	54.3	47.6	63.7	39.6	51.5	50.8
entosan in crude cellulose	26.5	25.1	25.7	23.7	8.90	8.85
ignin in crude cellulose	1.90	2.37	1.80	1.27	0.11	0.20
ure cellulose in original material	38.6	34.3	46.0	29.5	46.8	46.1
lpha-cellulose in crude cellulose	71.8	72.7	83.3	76.4	75.8	76.5
lpha-cellulose calcd. on original material	39.8	35.3	53.7	30.9	39.7	39.3
	Norman-Jenkins					
rude cellulose	55.3	49.7	63.6	41.8	50.6	51.6
sh in crude cellulose	0.70	0.88	0.50	1.11	1.10	1.17
rude cellulose corrected for ash	54.9	49.3	63.3	41.3	50.0	51.0
entosan in crude cellulose	30.3	31.5	26.9	28.1	7.84	7.92
ignin in crude cellulose	1.46	1.66	4.06	6.62	0.07	0.13
ure cellulose in original material	37.4	32.8	43.6	26.8	46.0	46.8
lpha-cellulose in crude cellulose	71.7	74.5	76.6	72.1	72.6	71.6
lpha-cellulose calcd. on original material	39.6	37.0	48.7	30.1	36.7	36.9
	Kürschner-Hoffer					
rude cellulose	48.2	42.5	55.0	40.4	49.2	49.0
sh in crude cellulose	5.50	2.80	0.80	9.50	0.20	0.23
rude cellulose corrected for ash	45.6	41.3	54.6	36.6	49.1[c]	48.9[c]
entosan in crude cellulose	16.8	20.3	19.9	16.3	7.07	5.95
ignin in crude cellulose	1.01	0.49	4.59	0.73	0.39	1.20
ure cellulose in original material	37.0	32.5	41.1	29.7	45.4	45.4
lpha-cellulose in crude cellulose	67.5	70.7	74.4	63.9	66.5	61.0
lpha-cellulose calcd. on original material	32.6	30.0	40.9	25.8	32.7	29.9

[a] All results except moisture are given on a moisture-free basis.
[b] Previously extracted by alcohol and benzene.
[c] Faintly yellow.

This alcoholic–nitric acid reagent has been criticized by Lewis and Laughlin (*10*) because it is injurious to the hands, desk, and clothing and also because it fumes violently when the alcohol and nitric acid are mixed. Ordinary care will prevent its being dropped on hands or clothing and the simple precaution of adding the acid to the alcohol, rather than the reverse, prevents fuming. Addition of alcohol to acid will cause bumping and explosions similar to that occurring when water is added to sulfuric acid. An odor of sweet spirits of niter is noticeable during the refluxing process. No noticeable effects have been incurred from this odor during use of the reagent over a period of 2 years. No loss in weight of the fritted-glass crucibles is found as with the other two methods. The precision of the Norman-Jenkins method is very good, the average deviation from the mean being less than 0.1 per cent. The Cross and Bevan and Kürschner-Hoffer methods are less precise, their average deviation being about 0.2 and 0.3 per cent, respectively.

If the cellulose produced is to be examined for alpha-cellulose either the Cross and Bevan or Norman-Jenkins method is satisfactory. However, on the basis of their analyses, the authors believe that if an alpha-cellulose or viscosity determination is not to be made, and if convenience and time are factors, the Kürschner-Hoffer method may well be used, particularly on farm wastes. The crude cellulose obtained by this method contained less pentosan and lignin than did the crude cellulose obtained by either of the other two methods.

Summary

Wheat straw, rye straw, bagasse, cornstalks, and two samples of spruce wood, one of 40- to 60- and one of 60- to 80-mesh fineness, have been analyzed by each of the three methods, Cross and Bevan, Norman and Jenkins, and Kürschner and Hoffer for cellulose content. The resulting crude cellulose was corrected for ash and analyzed for pentosan, lignin, and alpha-cellulose. The results have been calculated as "pure cellulose" and alpha-cellulose in the original material. Based on the weights of ash-free cellulose found, the Cross and Bevan and Norman-Jenkins results were shown to be practically the same but the Kürschner-Hoffer yields were 10 to 15 per cent lower. However, the Kürschner-Hoffer cellulose was considerably lower in pentosans and lignin and the calculated "pure cellulose" only averaged about 4 per cent lower than the Cross and Bevan "pure cellulose" and about equal to the Norman-Jenkins "pure cellulose." The Kürschner-Hoffer alpha-cellulose determinations show a decrease of about 20 per cent. In the light of recent research on the viscosity of cellulose, and in view of the fact that Kürschner-Hoffer cellulose has been found by other investigators to have an equal copper number but much lower viscosity than Cross and Bevan cellulose, it is suggested that this drop may be due to removal of the pectic layer, by the nitric acid used and the oxalic acid produced during the Kürschner-Hoffer reaction.

The Kürschner-Hoffer method was found to be approximately twice as fast as either of the other methods. It is recommended for large numbers of routine cellulose analyses, particularly on agricultural wastes where no further determinations on the resultant cellulose is contemplated.

Literature Cited

(1) Assoc. Official Agr. Chem., Official and Tentative Methods of Analysis, 4th ed., p. 344 (1935).
(2) *Ibid.*, p. 140.
(3) Cooper, S. S., *J. Chem. Education*, **14**, 188 (1937).
(4) Cross, C. F., and Bevan, E. J., *Z. angew. Chem.*, **21**, 1183 (1908).
(5) Farr, Wanda K., *Textile Research*, **7**, 65 (1936).
(6) Kalomanovitch, F., and Kalotireva, A. F., *Rayon and Melliand Textile Monthly*, **17**, 391, 462 (1936).
(7) Kiesel, A., and Semiganovsky, N., *Ber.*, **60B**, 333 (1927).
(8) Korsheniovsky, G., *Melliand Textilber.*, **15**, 274, 312 (1934).
(9) Kürschner, K., and Hoffer, A., *Chem.-Ztg.*, **55**, 161, 182 (1931).
(10) Lewis, H. F., and Laughlin, E. R., *Paper Trade J.*, **93**, No. 22, **43** (1931).
(11) Lynch, D. F. J., IND. ENG. CHEM., **22**, 952 (1930).
(12) Menon, S. R. K., *J. Textile Inst.*, **27**, T-230 (1936).
(13) Müller, H., in Hoffmann's "Ber. über die Entwickel d. Chem. Industrie. III," p. 27 (1877).
(14) Norman, A. G., and Jenkins, S. H., *Biochem. J.*, **27**, 818 (1933).
(15) Phillips, M., *J. Assoc. Official Agr. Chem.*, **15**, 129 (1932).
(16) Renker, M., "Über Bestimmungsmethoden der Cellulose," Berlin, Borntraeger, 1910.
(17) Schmidt, E., et al., *Ber.*, **54**, 1860, 3241 (1921); **56**, 23, 1438 (1923); **57**, 1834 (1924).
(18) Schorger, A. W., "Chemistry of Cellulose and Wood," 1st ed., p. 539, New York, McGraw-Hill Book Co., 1926.
(19) Sieber, R., and Walter, L. E., *Papier-Fabr.*, **11**, 1179 (1913).
(20) Wiertelak, J., and Garbaczowna, I., IND. ENG. CHEM., Anal. Ed., **1**, 110 (1935).
(21) Wiley, S. W., IND. ENG. CHEM., **17**, 304 (1925).

RECEIVED August 2, 1937. Contribution from the Industrial Farm Products Research Division, Bureau of Chemistry and Soils, U. S. Department of Agriculture.

Development of Acidity in Certain Lubricating Oils on Use or Oxidation

A. R. RESCORLA, F. L. CARNAHAN, AND M. R. FENSKE
Petroleum Refining Laboratory, The Pennsylvania State College, State College, Pa.

Increases in viscosity, sludge content, and carbon residue value of lubricating oils subjected to oxidation at elevated temperatures are in many instances accompanied by development of acidity. In such cases the acid content as indicated by an electrometric method is a convenient means of following these changes and of furnishing additional data on the general problem of oil deterioration. Some of the oil samples studied were obtained from engine tests, the remainder from a laboratory oxidation procedure.

A LUBRICATING oil undergoes complicated changes when it is subjected to oxidation at elevated temperatures. Whatever the nature of these changes, they are evidenced by variation in one or more of the following properties: viscosity, carbon residue, sludge content, and acidity. It is not implied that acid formation is either the cause or the effect of the other changes mentioned, but the data presented for the oils studied indicate that the acidity increases in a more or less regular way with these other indications of deterioration. The iron content of these oils in service also rises, but it is difficult to estimate the relative proportions of iron resulting from mechanical abrasion and chemical attack.

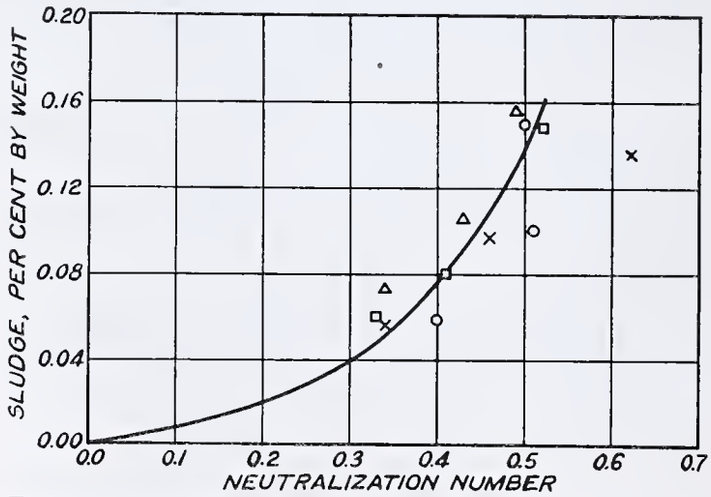

FIGURE 1. RELATION OF SLUDGE CONTENT AND ACIDITY FOR OIL 1 IN SEVERAL ENGINE TESTS

It should not be inferred that the relationships found in the case of these particular oils and conditions are general features for all oils and all types of oxidation treatment. Many exceptions will probably be evident when the problem has been studied more completely. While the data presented here show a reasonable correlation, other results (*5*) on different types of oil present such exceptions. Undoubtedly correlations of acidity with other properties will be affected by the type of crude and refining methods used to furnish the oil and also by the conditions employed in the oxidation or deterioration of the lubricant. For a given lubricant and test method, correlations as shown by the present data are possible.

Analytical Methods

The acid contents of oils were determined by an electrometric method previously described (*6*). Tungsten-platinum electrodes were used together with a vacuum-tube amplifying system and a milliammeter. The oil was dissolved in a mixture composed of equal parts of isoamyl alcohol, benzene, and carbon tetrachloride and saturated with lithium chloride; sodium isoamylate was used as the base.

TABLE I. PROPERTIES OF ORIGINAL OILS USED IN ENGINE TESTS

Oil number	1	2	3	4
Gravity, ° A. P. I.	28.6	29.6	29.5	30.8
Flash point, ° F.	450	415	405	425
Fire point, ° F.	505	470	465	490
Pour point, ° F.	+30	−10	−5	+25
Color, A. S. T. M.	7	3½	3½	4
Carbon residue	0.60	0.08	0.09	0.01
Acid number	0.02	0.08	0.08	0.00
Viscosity:				
Centistokes at 210° F.	10.9	5.73	5.69	5.80
Centistokes at 100° F.	99.8	38.1	36.3	38.55
Saybolt at 210° F.	61.6	44.2	44.0	44.4
Saybolt at 100° F.	460	178	169	179.6
Viscosity index	103	99	106	101

Viscosity was determined by means of modified Ostwald pipets (*2*); viscosity indexes were calculated using the data of Hersh, Fisher, and Fenske (*4*). The engine oil samples were not freed of dilution or sludge prior to ascertaining viscosity. Carbon residues were found by the A. S. T. M. method (*1*). Sludge was estimated by a procedure developed by this laboratory (*3*). A photometric analysis (*7*) for iron was utilized.

Description of Oils

Inspection data for the oils used in this investigation are shown in Table I. Oil 1 is a conventionally refined Pennsylvania oil in the S. A. E. 30 range. Oil 2 is a neutral; oil 3 is composed of 95 per cent oil 2 and 5 per cent sperm oil. Oil 4 is an unfiltered Pennsylvania neutral.

Engine Tests

Oils 1, 2, and 3 were used under carefully controlled conditions (*3*) in four 1933 Dodge 6-cylinder motors by the Depart-

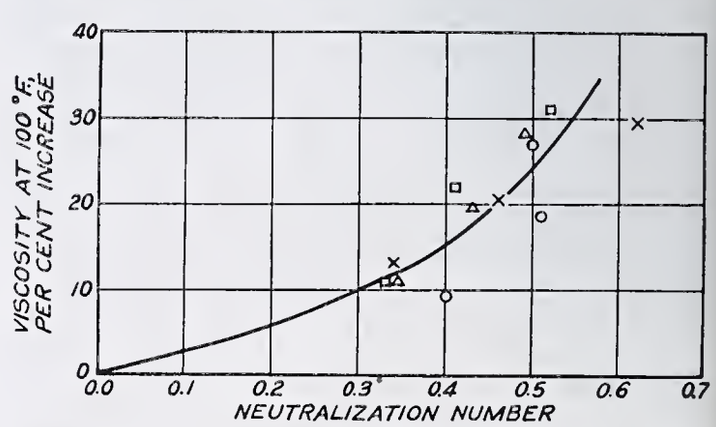

FIGURE 2. RELATION BETWEEN PER CENT VISCOSITY INCREASE AND ACIDITY OF OIL 1 IN SEVERAL ENGINE TESTS

ment of Mechanical Engineering. The engines were operated at 3250 r. p. m. to deliver 48 brake horsepower. The air-fuel ratio was 14 to 1; a nonleaded gasoline was used. The temperature of the oil entering the bearings was 121.11° C. (250° F.). Water entered the cooling system at 71.11° C. (160° F.) and left at 82.22° C. (180° F.). Samples for testing were removed from the oil circulation line at regular intervals.

Laboratory Oxidation

In laboratory oxidations, 150 cc. of oil were heated at 171.69° C. (341° F.) with 5 liters of air per hour passing through it. These conditions are essentially the same as those of the Indiana oxidation test developed by Rogers and Shoemaker (*8*). However, the procedure was modified in some instances by the presence of copper or other metals. In certain cases also, oxidation inhibitors were added to the oil being tested; the action of these materials will be discussed fully in another publication. During the progress of oxidation, the sludge content, the viscosity (usually taken on desludged oil), and the neutralization number were found.

Results and Discussion

Engine Runs. The relation between sludge content and acidity for oil 1, a conventionally refined S. A. E. 30 Pennsylvania oil, is shown in Figure 1. The results are from four different engine tests, in each of which a battery of four engines was run for 24 hours; closer correlation may be obtained if a separate curve is drawn for each test.

In general, lubricating oils increase in viscosity on oxidation, more viscous oils being more susceptible to this type of deterioration; on the other hand, lighter oils blended from the same stocks tend to form a greater proportion of sludge.

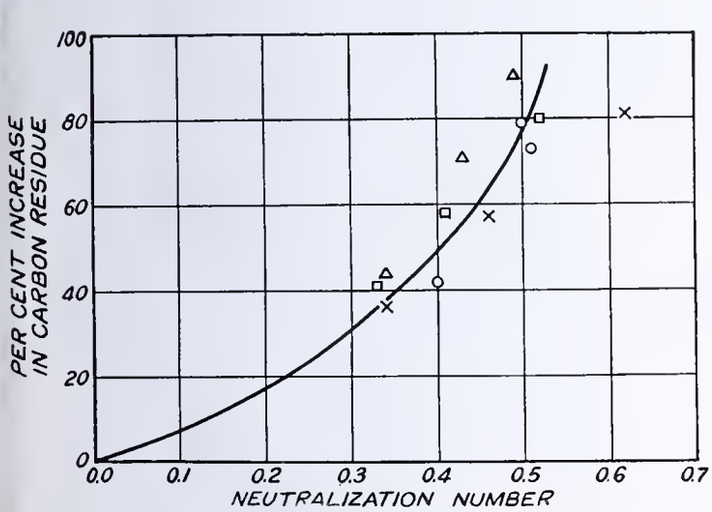

Figure 3. Acidity and Increase of Carbon Residue for Oil 1 in Several Engine Tests

Viscosity increase in oils is probably due to both sludge formation and polymerization, though the latter process alone results in considerable viscosity increases in certain heavy oils which produce little or no sludge on oxidation. However, for the oils studied in this work, acid formation seems to be related to viscosity increase as well as to sludging; data for oil 1 are given in Figure 2.

When an oil is used in an engine, its carbon residue value increases; this circumstance is probably associated with the formation of sludge, the production of large molecules by polymerization, and the action of high temperatures in certain portions of the motor. Under such conditions that carbon residue value increases, the acid content of an oil frequently becomes larger. In the present instance, a rather definite relationship exists, as the data of Figure 3 show. The initial carbon residue value for oil 1 as determined by the A. S. T. M. method was 0.6 per cent.

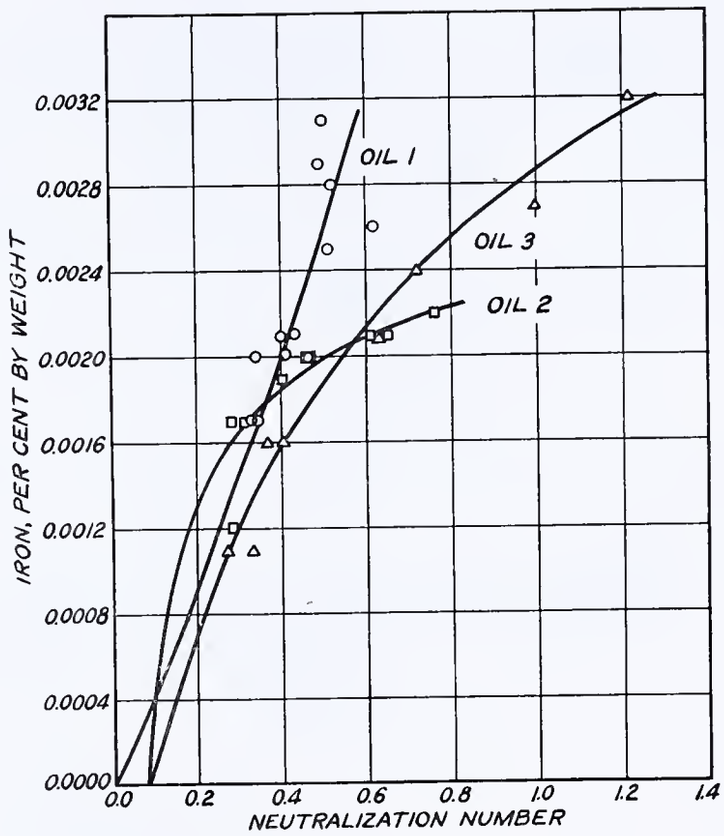

Figure 4. Iron Content and Acidity for Several Oils

Oils in internal combustion engine service gain a certain amount of iron, most of it probably from abrasion of ferrous surfaces but possibly some from the chemical attack of combustion products or acids in the oil. Though the iron contents of certain oils show a correlation with neutralization numbers, the role of petroleum acids in increasing the amount of iron in crankcase oils is not at all clearly defined. Some of the available data on acid and iron contents of used oils are presented in Figure 4.

Laboratory Oxidations. The deterioration of oils is generally accelerated by the presence of copper, other factors being the same. In regard to acid content, this circumstance is illustrated by Figure 5; the neutralization number for an unfiltered Pennsylvania neutral oil at the end of 48 hours' oxidation was about three times as great when copper was present.

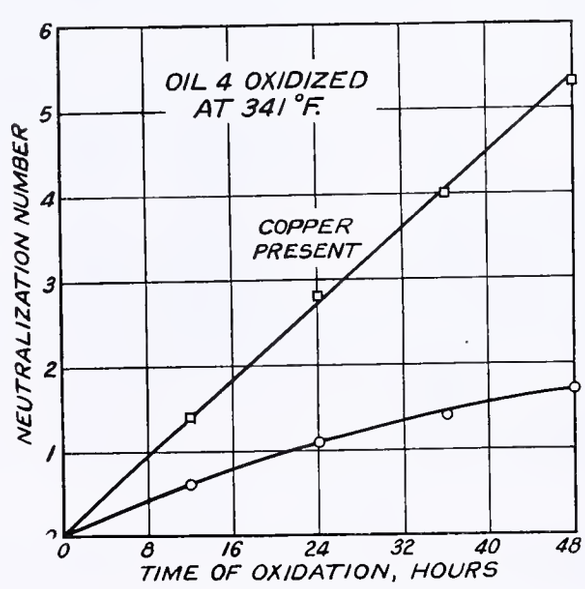

Figure 5. Effect of Copper on Acid Formation

The authors are very grateful for the technical assistance of E. K. Fisher, R. H. McCormick, and G. E. Woods in obtaining the data and for the coöperation of H. A. Everett and his associates in the Department of Mechanical Engineering in furnishing test data and oil samples in connection with their investigations on lubricants under service conditions.

The work was part of the research program of the Pennsylvania Grade Crude Oil Association, and is published with its permission and that of the School of Chemistry and Physics of The Pennsylvania State College.

Literature Cited

(1) Am. Soc. Testing Materials, Report Committee D-2, Standards on Petroleum Products and Lubricants, p. 61, September, 1936.
(2) Cannon, M. R., and Fenske, M. R., *Oil Gas J.*, 33, No. 47, 52 (1935); 34, No. 47, 45 (1936).
(3) Everett, H. A., and Stewart, F. C., Penna. State Coll. Eng. Expt. Sta. Ser., *Bull.* 44 (1935).
(4) Hersh, R. E., Fisher, E. K., and Fenske, M. R., Ind. Eng. Chem., 27, 1441 (1935).
(5) Mougey, H. C., paper before Subcommittee I on Corrosion Test for Lubricating Oils, Am. Soc. Testing Materials, Committee D-2, June 28, 1937, on "Tests to Determine the Corrosive Properties of Oils as Related to Bearing Metals."
(6) Rescorla, A. R., Carnahan, F. L., and Fenske, M. R., *Ibid.*, 9, 505 (1937).
(7) Rescorla, A. R., Fry, E. M., and Carnahan, F. L., Ind. Eng. Chem., Anal. Ed., 8, 242 (1936).
(8) Rogers, T. H., and Shoemaker, B. H., *Ibid.*, 6, 419 (1934).

Received August 12, 1937.

Determination of the Saponification Value of Asphalts and Asphaltic Oils

Use of an Improved Titration Flask

J. E. FRATIS and D. H. CONDIT
Standard Oil Company of California, San Francisco, Calif.

A simple and rapid method for determining the saponification value of asphalts and asphaltic oils, based upon standard methods and the use of a special titration flask, is described. Data are presented to demonstrate the accuracy and usefulness of the method.

THE natural characteristics of asphalts have always been an obstacle to the accurate determination of their saponification value. Despite the fact that numerous investigators have contributed to the literature concerned with this subject, the most widely recognized methods fail to give sufficiently rapid and accurate results for control work.

Recent investigations in this laboratory have included a study of the saponifiable constituents of asphalt. Among other data to be obtained from a large number of samples was the saponification value. The modified method presented below includes the usual refinements used in conventional methods: (1) the use of benzene-alcohol solutions to give contact during saponification and to prevent hydrolysis (*1, 4*); (2) addition of barium or sodium chloride to give a clear aqueous layer (*1, 2*); and (3) the use of dilute reagents to increase accuracy.

A further refinement which the authors have found extremely helpful in obtaining a sharp end point has been the use of a special titration flask (*3*). The flask is a 250-cc. glass-stoppered Erlenmeyer with a horizontal tube approximately 5 mm. in diameter sealed so as to reach one-third around the flask near its bottom (Figure 1). By tilting the flask, the side tube can be filled with the aqueous layer alone, thereby affording a close observation of the end point.

Analytical Method

Accurately weigh a 10-gram sample into a 250-cc. alkali-resistant Erlenmeyer flask. Dissolve the sample in 50 cc. of a mixture of 50 per cent benzene and 50 per cent of 95 per cent neutral ethyl alcohol and add 25 cc. of 0.05 *N* potassium hydroxide in 50 per cent aqueous alcohol.

Reflux for 1 hour and transfer while hot to the special titration flask, rinsing the saponifying flask with 10 cc. of the 50 per cent benzene-alcohol. (In order to reduce absorption of carbon dioxide the sample should not be exposed to the air more than necessary before and after refluxing.) Add 25 cc. of neutral 0.1 *M* barium chloride solution and 3 cc. of 0.5 per cent phenol-

Figure 1. Titration Flask

TABLE I. SAPONIFICATION VALUES

Petroleum Asphalts	Saponification Value *Mg./gram*	Natural Asphalts	Saponification Value *Mg./gram*
Arkansas	0.68	Bermudez (Lake)	6.20
California	0.50–3.25	Bermudez (fluxed)	11.30
Mexico	1.05–1.30	Road Oils	
Russia	0.99	California	0.75–2.75
Texas	0.46	Midcontinent	0.40
Venezuela (Quire Quire)	5.70	Oklahoma	1.04
Venezuela (Lake)	1.04	Pennsylvania	0.42
West Virginia	0.56		
Wyoming	0.36		

TABLE II. ACCURACY

Asphalt	Operator 1	Operator 2	Operator 3
A	1.56–1.56	1.58–1.56	1.54–1.55
B	3.12–3.08	3.06–3.09	3.07–3.05
C	0.81–0.83	0.79–0.83	0.81–0.84
D	0.14–0.17	0.13–0.17	0.15–0.16

TABLE III. COMPARISON OF RESULTS

Asphalt	Saponification Value Indicator method	Saponification Value Glass electrode method
California (A)	1.56	1.73
California (B)	3.08	3.38
Bermudez	11.30	11.27

phthalein. Titrate immediately against 0.05 *N* aqueous hydrochloric acid.

Add the acid rapidly without shaking the flask until the indicator begins to fade in the water layer. As the end point is approached, shake the flask after each addition of acid and tilt so that the side tube is downward. Touch the corner of the tube to a hot plate for a moment. This breaks any emulsion and cleans the walls of the tube, permitting observation of the aqueous layer. The last trace of pink in the side tube should be taken as the end point.

A blank should always be run on the reagents and solvents to determine the amount of caustic lost during the process. This blank usually amounts to 3 or 4 mg. of caustic and is fairly constant. Duplicate determinations should be made where greater accuracy is desired.

When determining the saponification value of asphalts having an unusually high value (Bermudez, Table I) a smaller sample is used.

While there might be some question regarding the limit of accuracy of the method, the authors have obtained a sufficient number of check results to indicate an experimental error of 0.05 mg. of potassium hydroxide per gram.

Analytical Results

Table I lists the saponification values for a series of representative paving grade asphalts.

Table II illustrates the accuracy obtained by different operators using the method.

The accuracy of the method was also checked by electrometric titration using a glass electrode. Table III is a comparison of the results obtained by the two methods.

Literature Cited

(1) Abraham, H., "Asphalts and Allied Substances," 3rd ed., p. 752, New York, D. Van Nostrand Co., 1930.
(2) Coburn, IND. ENG. CHEM., Anal. Ed., 2, 181 (1930).
(3) Davidsohn, A., *Fettchem. Umschau.*, 42, 9–10 (1935).
(4) Marcusson, J., Burchartz, H., and Wilke, P., "Die natürlichen und künstlichen Asphalte," p. 90, Leipzig, Wilhelm Engelmann, 1931.

RECEIVED June 28, 1937.

Arsenious Oxide in the Standardization of Solutions of Potassium Permanganate

HARRY A. BRIGHT
National Bureau of Standards, Washington, D. C.

Values obtained in the standardization of 0.1 *N* potassium permanganate solutions by National Bureau of Standards' arsenious oxide No. 83, using potassium iodide or potassium iodate as a catalyst (Lang's procedure), have been compared to those obtained with sodium oxalate by the method of Fowler and Bright. The normalities found agreed to within one part in 3000, which demonstrates the suitability of arsenious oxide as a direct primary standard in permanganimetry.

IT IS WELL known that the direct titration of trivalent arsenic with permanganate in dilute acid solutions is unsatisfactory because the reaction does not proceed according to stoichiometric relations. Lang (*3*) has stated that a very small amount of potassium iodate or iodide acts as a catalyst to complete the reduction of manganese to the divalent state. His data show satisfactory precision, and he apparently checked the accuracy of the procedure by means of iodine (through permanganate-iodide and thiosulfate), though this is not stated clearly. Kolthoff, Laitinen, and Lingane (*2*) compared the normality of 0.5 *N* potassium permanganate determined by Lang's procedure with that found by direct potentiometric titration of potassium iodide with permanganate in very dilute acid solution. The factors obtained by the two methods agreed within 0.03 per cent.

Recently the author has made a careful comparison of Lang's procedure with the sodium oxalate procedure of Fowler and Bright (*1*) to determine whether the former is sufficiently accurate to permit the use of the National Bureau of Standards' standard sample No. 83 of arsenious oxide (now issued as an iodometric standard) as a fundamental standard in permanganimetry.

The experimental details, in brief, were as follows:

Weight burets were used, and all weights were corrected to the vacuum standard. National Bureau of Standards' sodium oxalate No. 40c (purity taken as 99.95 per cent) and arsenious oxide No. 83 (purity taken as 99.98 per cent) were used. Both materials were dried for 1 hour at 105° C. immediately before use. In the potentiometric titration the usual bright platinum-calomel electrode arrangement was used. Standardization with sodium oxalate was done as described by Fowler and Bright.

With arsenious oxide Lang's procedure, as described below, was used except that 0.3- to 0.6-gram samples were taken.

Procedure for Standardizing 0.1 *N* Potassium Permanganate with Arsenious Oxide

Accurately weigh approximately 0.25 gram of the dried oxide and transfer to a 400-ml. beaker. Add 10 ml. of a cool 20 per cent solution of sodium hydroxide, free from oxidizing or reducing substances. Let stand for 8 to 10 minutes, stirring occasionally. When solution is complete, add 100 ml. of water, 10 ml. of hydrochloric acid (sp. gr. 1.18), and 1 drop of 0.0025 *M* potassium iodate or potassium iodide. The titration can be followed potentiometrically or visually.

POTENTIOMETRICALLY. Titrate with the permanganate solution to the maximum value of the ratio, $\Delta E/\Delta V$, change in potential per unit volume of solution added. Add the last 1 to 1.5 ml. dropwise, allowing equilibrium to be reached before the ΔE reading is taken. In the potentiometric titration the blank is negligible, provided the reagents are free from interfering substances.

VISUALLY. Titrate with the permanganate solution until a faint pink color persists for 30 seconds. Add the last 1 to 1.5 ml. dropwise, allowing each drop to become decolorized before the next is introduced. Determine the volume of permanganate required to duplicate the pink color of the end point. This is done by adding permanganate to a solution containing the same amounts of alkali, acid, and catalyst as were used in the test. The corrections should not amount to much more than 0.03 ml. The end point can also be taken with ferrous phenanthroline indicator. In this case, add 1 drop of a 0.025 *M* solution of the indicator as the end point is approached. Then add permanganate slowly until the pink color of the indicator changes to a very faint blue. The blank correction should average about 0.02 ml.

The normalities indicated for two approximately 0.1 *N* solutions of potassium permanganate are shown in Table I. The data indicate that the recommended procedures yield results of a very satisfactory order of precision and that the standardizations of permanganate solutions by the use of the National Bureau of Standards' standard samples of sodium oxalate No. 40c and arsenious oxide No. 83 should agree within one part in 3000.

TABLE I. NORMALITY OF POTASSIUM PERMANGANATE

(Comparison of the normality of approximately 0.1 *N* $KMnO_4$ as indicated by titration of As_2O_3 and $Na_2C_2O_4$)

Normality by As_2O_3	Number of Determinations	Average Deviation from Mean	Difference from $Na_2C_2O_4$ Value	Catalyst
		%	%	
Series 1. Normality by $Na_2C_2O_4$ = 0.10015[a]				
0.10016	3	0.022	0.01	KIO_3
0.10018[b]	3	0.029	0.03	KIO_3
0.10019	2	0.002	0.04	KIO_3[c]
0.10019	3	0.028	0.04	KI
Series 2. Normality by $Na_2C_2O_4$ = 0.10391[a]				
0.10387	1	...	0.04	KIO_3[d]
0.10388	1	...	0.03	KI[d]
0.10390	4	0.015	0.01	KIO_3
0.10389	2	0.015	0.02	KI

[a] Normality as indicated by Fowler and Bright's method. In the first series the value is the average of 8 determinations (average deviation from mean = 0.014 per cent), and in the second, the average of 7 determinations (average deviation = 0.010 per cent).
[b] 0.6000 gram of arsenious oxide used, all others 0.3000 gram.
[c] $KMnO_4$ added slowly, about 7 ml. per minute.
[d] End point with *o*-phenanthroline.

Literature Cited

(1) Fowler and Bright, *J. Research Natl. Bur. Standards*, 15, 493 (1935).
(2) Kolthoff, Laitinen, and Lingane, *J. Am. Chem. Soc.*, 59, 429 (1937).
(3) Lang, R., *Z. anal. Chem.*, 152, 197 (1926).

RECEIVED October 21, 1937. Published by permission of the Director, National Bureau of Standards, U. S. Department of Commerce.

A Simple Electrodialyzer

DOUGLAS B. ROXBURGH AND MARSCHELLE H. POWER
The Mayo Foundation, Rochester, Minn.

IN THE course of certain investigations in this laboratory involving the purification of serum proteins, a simple and fairly easily constructed electrodialyzer has been developed. It is similar in some respects to that described recently by Bartell (*1*) but seems to offer advantages as regards ease of construction and use.

The apparatus used is illustrated in Figure 1. It consisted of a central glass cylinder, *a*, 46 mm. in outside diameter and 60 mm. in length, and two glass cylinders, *b*, each 49 mm. in inside diameter and 60 mm. in length. These cylinders were cut with a rotary saw from thick-walled Pyrex glass tubing; the ends were carefully ground and then fire-polished. The cylinders, *b*, were closed with No. 11 soft-rubber stoppers each carrying a glass tube, *f*, into which was sealed a coil of platinum wire, and small glass tubes, *g* and *h*, for inflow and outflow of distilled water.

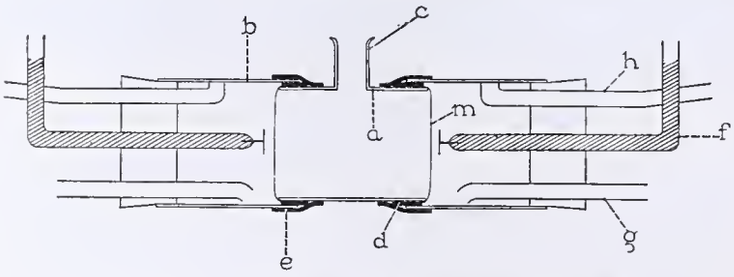

FIGURE 1. DIAGRAM OF ELECTRODIALYZER

The glass tubes, *f*, were bent as shown and filled with mercury, into which wires leading from a bank of B batteries were inserted.

The apparatus is assembled and prepared for use as follows: A square of Cellophane (du Pont No. 300, plain transparent) is placed over each end of cylinder *a* and held in place by gathering the edges under the rubber band, *d*. The end of the cylinder is dipped into water and the moistened paper then is adjusted until it is smooth and tight. The excess paper can be trimmed off even with the rubber band. The cylinders, *b*, are now forced carefully over the ends of the smaller cylinder and the joints made water-tight by means of a second rubber band, *e*. The rubber bands, *d*, 10 mm. in width, and *e*, 20 mm. in width, were cut from ordinary Gooch crucible tubing having a flat outside diameter of 3.1 cm. (1.25 inches). With the Cellophane membranes, *m*, in place, the capacity of *a* was about 100 cc.

With this apparatus it was found that a sodium sulfate solution of protein which had previously undergone simple dialysis, could be electrodialyzed, in 6 to 8 hours at 220 volts, to the point at which the specific conductivity was of the order of 1×10^{-5}, as determined by a standard method. When the conductivity was of this order a milliammeter inserted in the circuit indicated the passage of a current of 0.5 to 1.0 milliampere through the apparatus.

Literature Cited

(1) Bartell, F. E., IND. ENG. CHEM., Anal. Ed., 8, 247 (1936).

RECEIVED October 29, 1937.

Apparatus for Freezing Point Determinations

D. QUIGGLE, C. O. TONGBERG,[1] AND E. M. FRY,[1] The Pennsylvania State College, State College, Pa.

THE value of freezing point determinations as an aid in ascertaining the purity and establishing the identity of substances, particularly of hydrocarbons isolated from petroleum, is well known (*2, 3, 5–7*). For determining definite values of purity, particularly for substances freezing at low temperatures, it is obvious that a careful, standardized, and reproducible procedure is necessary.

In order that the usual observations of temperature as a function of time may be used to the best advantage and that results may be reproducible, it is essential that the rate of heat withdrawal from the cooling liquid as well as the freezing mass be at a substantially constant rate. This may best be accomplished by maintaining a constant temperature difference between the sample and its surroundings.

It is important in working with substances which freeze at low temperatures to exclude air from the sample. This eliminates any possibility of condensation of moisture in the air, and solution not only of it but also of the air, in the freezing liquid, with possible lowering of the freezing point due to such contamination.

Also, it is desirable in obtaining freezing points of inflammable materials such as hydrocarbons, when liquid air is used as the cooling medium, that the apparatus be fabricated of metal. The possibility of an explosion or a fire inherent in a glass apparatus if breakage should occur, allowing the sample to come into contact with the high oxygen concentration present in liquid air, is thus done away with (*4*). In order to approximate the foregoing conditions as closely as possible, the freezing point apparatus shown in Figure 1 has been constructed.

Apparatus

The apparatus consists of three concentric brass tubes, *C*, *D*, and *E*, soft-soldered to a common brass top. The innermost tube, *E*, is 2.9 cm. in outside diameter (1.125 inches, No. 20 Stubs gage) and 15.9 cm. long (6.25 inches). This tube is open at the top and closed at the bottom and is the container for the sample. The middle tube, *D*, is 4.4 cm. in outside diameter (1.75 inches, No. 18 Stubs gage) and 17.2 cm. (6.75 inches) long. It also is closed on the bottom. Since these two cans are soldered to the common brass top, the annular space existing between them is shut off entirely from the outside air. The lengths of the inner and middle tubes, *E* and *D*, are such that a 1.3-cm. (0.5-inch) space is left between the two bottoms.

Fastened to the outside of the inner tube, *E*, and to the inside of the middle tube, *D*, with the tips properly insulated, are two sets of opposing asbestos-covered copper-constantan thermocouples, *G*, to determine the temperature difference between these two surfaces. One set of thermocouples leads directly through a switch to the potentiometer, while the other set goes to a photoelectric-cell control device for maintaining the desired temperature difference. The leads are brought out through a tube, *M*, in the top of the can, the connection being made air-tight by a special packing arrangement. Before this annular space was closed off, it was first evacuated and then filled with dry nitrogen. In this way the medium between the tubes is always constant and unaffected by the sucking in of air and condensation of moisture on the cold surfaces which would change the heat transfer coefficient and hence the rate of heat withdrawal.

The third and outer tube, *C*, is 5.7 cm. in outside diameter (2.25 inches, No. 17 Stubs gage) and 18.1 cm. (7.125 inches) long. There is an 0.8-cm. (0.31-inch) hole in the bottom of this can and two 0.3-cm. (0.125-inch) nickel tubes, *L*, protrude from the top cover between it and the middle can. This unit made up of the three tubes is kept in a silvered Dewar, *B*, 11.4 cm. (4.5 inches) in inside diameter by 38 cm. (15 inches) deep, with a 1.9-cm. (0.75-inch) unsilvered strip running from top to bottom to allow the depth of liquid air, which is used as the cooling medium, to be observed. A cork ring, *K*, holds the brass freezing point unit centered in the thermos bottle. The joint between the cork ring and the brass unit is made tight by rubber cement, and that between the cork ring and the bottle, by a piece of rubber automobile inner-tube, some wire, and paraffin wax. These seals prevent the liquid air, which is vaporized by a heater, *A*, made of two concentric coils of asbestos-covered chromel resistance wire (1.1 ohms per foot, total resistance 6 ohms) located at the bottom of the thermos bottle, from taking any path other than that through the hole in the bottom of the outer brass can, *C*, into the annular space between the outer and middle tubes, *C* and *D*, and out through the exit tubes, *L*, at the top.

Temperatures of the freezing liquid are obtained by means of a thermocouple unit, *U*, made of No. 30 B and S gage constantan wire and No. 36 B and S gage copper wire, both double silk-covered. This unit consists of five thermocouples connected in series with leads taken off in such a way that the temperature may be measured by two, three, or five thermocouples in series. This allows a greater accuracy in temperature reading to be obtained than is possible with a single thermocouple. The lower the temperature level at which the substance freezes, the less the accuracy with which the temperature may be read, because of the gradual decrease in the millivolt change per degree of temperature—for example, at 0° C. the millivolt change per degree is twice that at −171° C. (and three times that at −218° C.). The tips of the thermocouple unit are soft-soldered and insulated from one another with a cellulose acetate coating.

To keep the unit out of direct contact with the sample and at the same time allow the minimum of temperature drop between

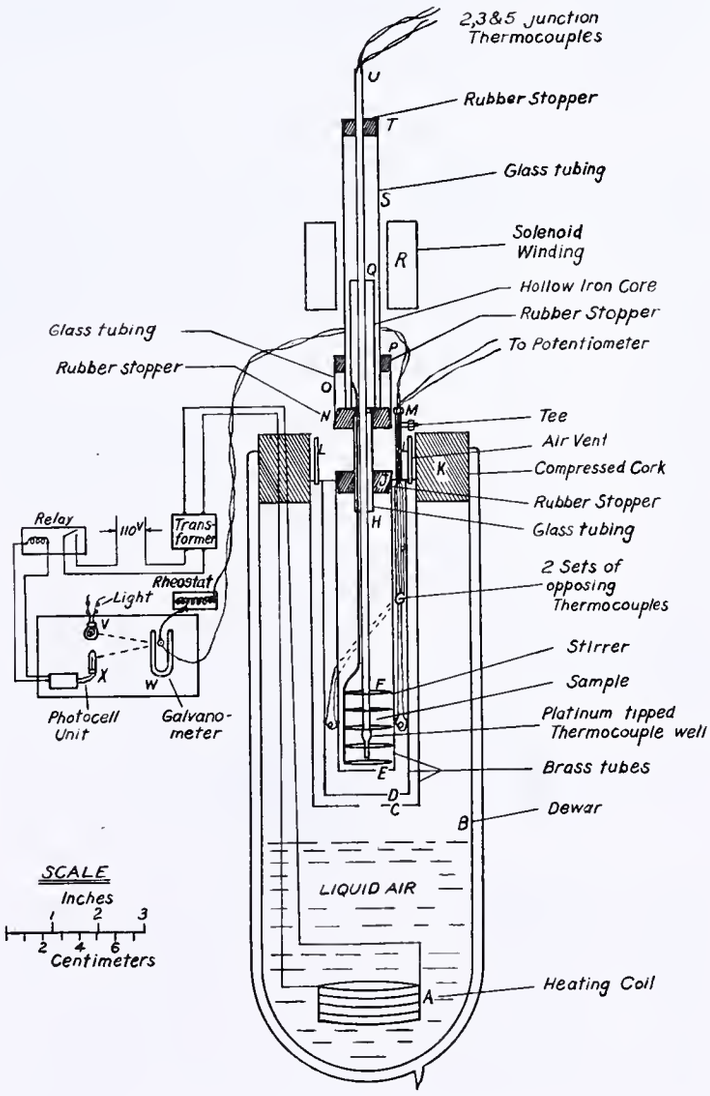

FIGURE 1. FREEZING POINT APPARATUS

[1] Present address, Esso Laboratories, Elizabeth, N. J.

the thermocouples and the sample, the former are placed in a protecting tube made of soft-glass capillary tubing into the end of which a thin-walled platinum tube 3 mm. in outside diameter (0.125 inch) by 3.5 cm. (1.375 inches) in length is sealed. The tips are placed in the platinum end of the tube, which is flattened out over them in such a way that it is in direct contact with their cellulose acetate insulation. The end of the platinum tube is closed off with soft solder, while Picein (Central Scientific Co.) cement holds the thermocouples in place at the top of the glass capillary and effectively prevents condensation of moisture in the tube. This thermocouple unit is made of constantan wire from the same spool as that used in the Cryoscopic Laboratory at the Pennsylvania State College. In addition, the thermocouple unit has been checked against one of the Cryoscopic Laboratory's thermocouples which has been accurately calibrated down to temperatures of 12° K. (*1*). Additional checks have been obtained at the freezing point of mercury, the sublimation point of carbon dioxide, and the boiling point of oxygen.

Temperatures are measured by means of a Leeds & Northrup Type 8662 portable, precision potentiometer, and the readings are accurate to within ±0.02° to ±0.05° C., depending upon the number of thermocouples used in measuring the temperature and the temperature level at which the substance freezes.

To exclude air from the sample a stirrer actuated by a solenoid is used. The stirrer, *F*, is made of several loops of 1.6-mm. (0.083-inch) brass rod fitting closely against the sides of the tube, but still allowing free up and down motion. These loops are brazed on one side, and at right angles, to the handle of the stirrer which is fastened at its upper end to a hollow iron core, *Q*. This core is about 1.3 cm. (0.5 inch) in outside diameter and 7.1 cm. (2.8 inches) long (weight 41 grams) with an inside diameter sufficiently large to allow it to slip up and down over the thermocouple tube. The iron core with attached stirrer is raised every time an outside coil, *R*, 4.5 cm. (1.75 inches) long containing about 800 grams of No. 26 B and S gage enameled copper wire is energized, and dropped when the coil is deënergized. The current through this coil, which is normally controlled by a Variac transformer (General Radio Co.), is made and broken 30 times a minute by a "flasher" (from the 5 and 10 cent store). This "flasher" apparently functions by the alternate expansion and contraction of a metal and is a device which is commonly used for alternately turning electric lights on and off.

Operation

In determining a freezing point a sample of about 30 cc. is used, which fills the tube to a depth of about 5 cm. In adding the liquid air to the Dewar through an opening (which is closed at all other times with a cork stopper) in the cork ring between the bottle and the brass freezing point unit, the stream is played directly on the unit until the desired liquid

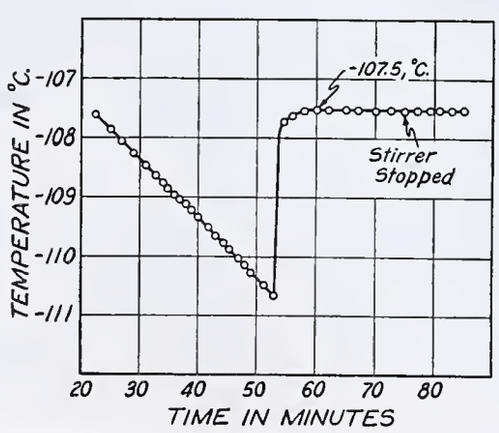

FIGURE 2. COOLING CURVE FOR 2,2,4-TRIMETHYLPENTANE

air level (which is always kept below the bottom of the brass freezing point unit) is attained. By doing this (while the sample is being stirred), the temperature of the sample is more quickly reduced and the amount of liquid air used for the determination is appreciably lessened. In general, it has been found that 0.5 to 2 liters of liquid air suffice for the freezing point determination of a hydrocarbon, depending on the skill of the operator and the temperature level at which the substance freezes. The temperature is then further reduced to within a few degrees of the freezing point of the sample by vaporizing the liquid air by means of the heater, *A*, located in the liquid air at the bottom of the thermos bottle. The rate of evaporation is then regulated so that approximately the desired temperature difference between the inner and middle tubes is maintained. A temperature difference of 10° to 15° C. seems suitable for most hydrocarbons.

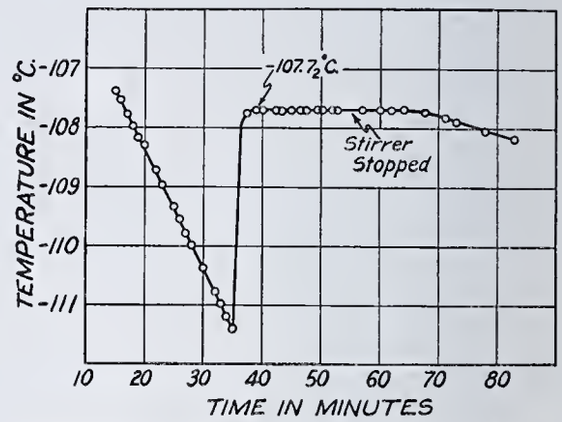

FIGURE 3. COOLING CURVE FOR 2,2,4-TRIMETHYLPENTANE CONTAINING 0.9 MOLE PER CENT OF NORMAL HEPTANE

The temperature difference existing is determined by the opposing set of thermocouples which is connected directly to the potentiometer. At this point, the set of opposing thermocouples connected to the photoelectric-cell temperature-control device is brought into operation by closing a switch. The principal features of this device are a relay to turn the current on and off in the heater which vaporizes the liquid air, a photoelectric-cell unit, *X*, and a galvanometer, *W*. If less than the desired temperature difference between the sample tube, *E*, and the middle tube, *D*, exists, the galvanometer mirror is at such an angle that it causes a beam of reflected light from *V* to fall at some position other than on the photoelectric cell and in this position the relay is closed, allowing current to pass through the heater with consequent evaporation of liquid air. When the temperature difference tends to get too great, owing to the cooling effect of the vaporized liquid air, the galvanometer mirror swings to such an angle that the beam of reflected light shines on the photoelectric cell which causes the relay to open, thus shutting off the current and stopping the vaporization of liquid air. This causes the temperature difference to decrease, the beam of light to be thrown off the cell, the relay to be closed, the liquid air to be vaporized again, etc. Thus a constant temperature difference is always maintained.

A rheostat in series with the pair of opposing thermocouples and the galvanometer of the photoelectric-cell control device makes it easy to control the current passing through the thermocouple circuit, so that the right deflection of the galvanometer mirror may be maintained to give the desired temperature difference. It is unnecessary to change the setting of this rheostat once the position for the desired temperature difference has been found. The mirror deflection may also be regulated, though less readily, by turning the knob attached to the mirror suspension.

In some instances the operator may find it unnecessary to use the photoelectric-cell control device for maintaining a substantially constant difference in temperature between the can containing the sample and the surroundings. When sufficient technic has been acquired, it is possible so to adjust the amount of current going through the heating coil that just sufficient liquid air is evaporated to maintain the desired difference in temperature. The considerable mass of the freezing point unit is an important factor in making this possible.

While this extra mass may require the use of more liquid air, it is believed that the benefits derived from such uniform and definite control over the freezing behavior are far more important than a small economy of liquid air. It is obviously impossible to have optimum conditions for every phase of the operation, and for this apparatus the emphasis has been placed on reproducibility, reliability, and accuracy with the minimum of special detailed or skilled technic.

It is realized that the solenoid stirrer is not the most powerful device that may be used for stirring, and other stirring means may be used. However, this stirrer is adequate for all the ordinary cases of freezing point measurement where a liquid is frozen under definite and controlled conditions. True, thermal and molecular equilibrium between the solid and liquid phases is not a condition that is readily attained, and yet it is a fundamental requisite for correct freezing point data. It is obvious that this condition can be more readily attained if the liquid phase, rather than the solid phase, predominates. Under such conditions the stirrer described here is ample. It may not be adequate where a considerable mass of solid needs to be broken up while at the same time intimately maintaining contact with the liquid phase. But, as indicated, it is believed that the more reliable freezing point measurements are made under conditions where a large mass of solid is not present. Otherwise a mechanically driven stirrer is advisable.

Results

Typical time-temperature freezing point curves obtained with this apparatus are shown in Figures 2 and 3. Figure 2 gives the results obtained with a mixture of substantially pure 2,2,4-trimethylpentane. The freezing point of $-107.5_1°$ C. obtained indicates a purity of 99.6 mole per cent when the value of $-107.41°$ C. is taken as the correct freezing point of the pure substance (*2*). Figure 3 shows the freezing point of the same material, when 0.9 mole per cent of pure normal heptane is added to be $-107.7_2°$ C. Calculations on the purity of this mixture from the freezing point depression (*2*) indicate a purity of 98.8 per cent, which checks very well with the known amount of normal heptane added. These results indicate that where the simple relationships concerning freezing point depression and mole per cent purity are valid, the apparatus and procedure outlined should be useful in determining the purity of materials, especially in cases where the freezing point depression might otherwise be difficult to determine.

Acknowledgment

The authors are indebted to M. R. Fenske for his suggestions and help, and to J. G. Aston and G. H. Messerly for their assistance in calibrating the thermocouple unit.

Literature Cited

(1) Aston, J. G., Willihnzanz, E., and Messerly, G. H., *J. Am. Chem. Soc.*, **57**, 1642 (1935).
(2) Bruun, J. H., and Hicks-Bruun, M. M., *Bur. Standards J. Research*, **9**, 269 (1932).
(3) Hicks-Bruun, M. M., and Bruun, J. H., *J. Am. Chem. Soc.*, **58**, 810 (1936).
(4) Kanolt, C. W., *Bur. Standards Sci. Paper* **520** (March 17, 1926).
(5) Leslie, R. T., and White, J. D., *Bur. Standards J. Research*, **15**, 211 (1935).
(6) Rossini, F. D., *Proc. Am. Petroleum Inst.*, **16M** (III), 47 (1935).
(7) Skau, E. V., *Proc. Am. Acad. Arts Sci.*, **67**, No. 12, 551 (1933); *J. Phys. Chem.*, **37**, No. 5, 609 (1933).

RECEIVED July 28, 1937. References *5* and *6* list all papers published to June, 1935, by A. P. I. Research Project 6 at the National Bureau of Standards on the chemical constitution of the gasoline fraction of petroleum.

A Glass-Enclosed Metallic Reference Electrode

OLUS J. STEWART AND WILLIS L. CARRUTH, University of Kentucky, Lexington, Ky.

AN ELECTRODE was constructed by drawing a short length of Corning No. 015 glass tubing to the proportions of a fine knitting needle, closing one end of the thin-walled tube in a flame, and introducing sufficient mercury to provide a depth of 1 or 2 inches at the closed end. Metallic contact with the mercury was effected by inserting a fine wire of iron or platinum.

The potential of this glass electrode, whether open to the air and charged with mercury or closed and charged with a liquid amalgam of sodium, potassium, lithium, copper, cadmium, bismuth, or tellurium, was found to be unaffected by the oxidizing character of the solution into which it dipped. The device, therefore, may serve as a reference electrode in oxidation-reduction potentiometric titrations. As a hydrogen electrode, however, it has not yielded satisfactory pH values in buffered solutions. This problem will be the subject of a later study.

In order to ascertain the serviceableness of the instrument as a reference electrode, a number of titrations were conducted in a vessel provided with both the glass electrode and a calomel half-cell of the usual type, together with a stout platinum wire which served as the indicator electrode. After each addition of the reagent, the measuring electrode was alternately connected in series with the glass and with the calomel electrode through an amplified circuit, and the potentials were recorded. The vacuum-tube circuit used was that described by Elder (*2*) and the potential differences were read with a Leeds & Northrup student-type potentiometer. In several instances the results were verified by more refined measurements made with the vacuum-tube circuit employed by Amis and Gabbard (*1*) and by them kindly placed at the authors' disposal.

The following types of potentiometric titrations were studied:

A. Ferrous solutions acidified with sulfuric acid and titrated with ceric sulfate solution, acidified with sulfuric acid and titrated with permanganate solution, or acidified with hydrochloric acid and titrated with dichromate solution in the presence of mercuric chloride, mercurous chloride, stannic chloride, and phosphoric acid, the last-named compound serving to render the end point sharp.

B. Hypochlorite solutions, buffered with sodium bicarbonate, and titrated with arsenite solution.

When the volumes of reagents used were plotted against the corresponding potential readings, the resulting curves for the two electrode systems were parallel in *A* but were not parallel in *B*. The two electrodes, however, yielded identical end points.

The stability of the glass electrode was further compared with that of the calomel electrode by placing the two reference electrodes in opposition during the titration of an acidified ferrous solution with a dichromate solution. The potential

difference remained constant throughout the operation, even though the end point was finally considerably overrun.

Several years ago Stewart (*3*) operated a sodium coulometer in such a manner that sodium was electrolytically removed from the sodium amalgam with which the cell was charged. On one occasion electrolysis was inadvertently continued after the supply of sodium had been exhausted, with the result that the glass of the cell became permanently discolored. If this discoloration was the result of mercury ions entering the glass, it seems reasonable to suppose that the mercury-filled glass electrode described in this paper functions as a metallic electrode, the glass wall acting in the capacity of an electrolytic medium through which mercury ions tend to migrate.

The electrode described in this paper possesses such advantages as simplicity of construction, sturdiness, convenience, immunity to attack by reagents and "poisons," impenetrability, suitability for semimicro work, and adaptability for insertion into living tissue.

Literature Cited

(1) Amis and Gabbard, *J. Am. Chem. Soc.*, **59**, 557 (1937).
(2) Elder, *Ibid.*, **51**, 3266 (1929).
(3) Stewart, *Ibid.*, **53**, 3366 (1931).

Received June 24, 1937. Based upon the thesis presented to the faculty of the Graduate School of the University of Kentucky by Willis L. Carruth in partial fulfillment of the requirements for the degree of master of science.

The Goodrich Flexometer

E. T. LESSIG, Physical Research Laboratory, The B. F. Goodrich Company, Akron, Ohio

A new form of hysteresis test has been developed in this laboratory and used for a number of years in the study of heat generation and fatigue of both rubber and rubber-fabric compositions at ordinary and elevated temperatures. It involves applying a definite compressive load to a test piece through a lever system having high inertia, imposing on the sample an additional high-frequency cyclic compression of definite amplitude, and measuring with a thermocouple the temperature rise at the base of the test piece. Because of the high inertia and low natural period of the lever system, practically none of the high-frequency vibration is transmitted to the loading lever, although the lever does move to compensate for slow changes in the sample caused by permanent set and other structural changes. The machine may be used to study the effects of the time of cure, the magnitude of the applied load, changes in pigmentation, and variations caused by anisotropy in rubber compounds on the heat generation during flexure. It is so designed that structural changes such as softening or stiffening may be followed during the period of flexure.

THE service of rubber compounds often is limited by the heat generated during the flexing of the rubber and several types of flexing machines have been developed to study this factor.

In one of the first tests (*14*) devised, a spherical test piece was rotated under compression between two parallel plates until rupture occurred. Vogt (*20*) described the use of the Shields rotary machine. In this test bands are stretched radially over lubricated pins on a vertical rotating disk. The center pins are on an eccentric so that the bands are alternately stretched and relaxed. The hysteresis is measured by the throw of a pendulum which measures the torque produced. Later Abbott (*1*) arranged test pieces between two horizontal plates. The loaded top plate was then oscillated in the horizontal plane. The flexure-set, temperature rise, and time of failure were observed. Depew and Snyder (*8*) subjected rubber cylinders to a specified number of hammer blows per minute in order to study heat generation and breakdown.

In 1933, Cooper (*5*) reported a new compression flex test in which the test piece was held between two loaded, eccentric horizontal plates, one of which was rotated usually until the sample ruptured or blew out. (For those unfamiliar with the terminology of the rubber industry it should be stated that blowouts in solid masses of rubber are caused by the development of high temperatures at the center of the mass, causing decomposition, the formation of liquid and gaseous compounds, and finally rupture of the solid walls of the mass by the expansion of these decomposition products. In large masses under heavy loads the temperatures attained have been so high that ignition of the gases has occurred spontaneously.) The changes in the test piece during the test were followed by measuring the permanent set. Havenhill and MacBride (*11*) in 1935 described an improved compression flexometer fundamentally similar to Cooper's machine, but so designed that the horizontal forces necessary to displace or maintain the lower plate in a given off-center position could be measured at any time. With this arrangement certain structural changes during flexure could be followed. In later experiments Havenhill (*10*) showed that rubber test pieces stiffened during flexure and in some instances exhibited an anisotropic structure.

The development of these tests has moved in the direction of smaller and more conveniently prepared test pieces, but none of them has reached the stage where the test pieces were small enough to be cut from finished products such as pneumatic tire treads, nor could they be used very effectively with rubber-fabric compositions. In the tests which employ the off-center rotation, large horizontal forces are encountered which act in opposite directions at the two plates and large loads are required to keep the test pieces from slipping. For this reason the specimens usually develop very high temperatures and blow out in a very short time. Apparently none of the tests has been used generally to measure the temperature rise at equilibrium under less severe flexing conditions, nor have the machines so far described been equipped for work at elevated temperatures.

The study of ply separation or the separation of fabric from rubber has been confined, for the most part, to the study

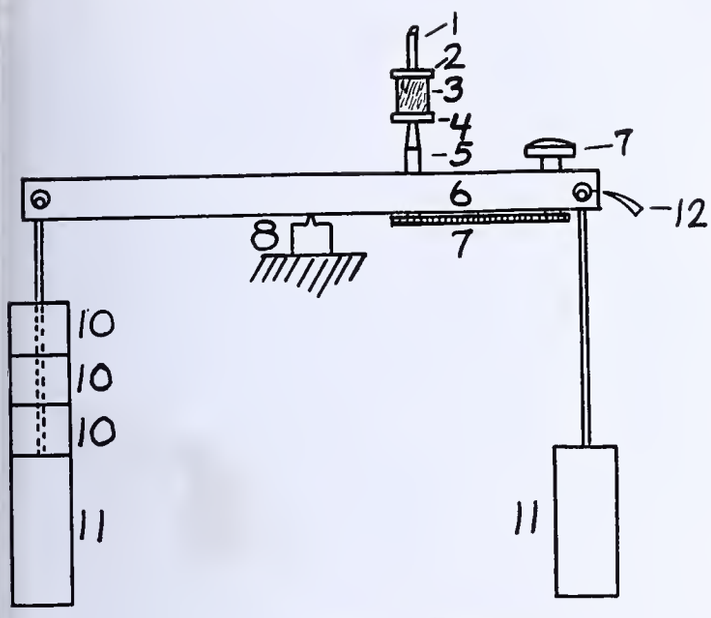

FIGURE 1. DIAGRAM OF FLEXOMETER

of belts (*12*, *16*) driven under load or to strips of plied, calendered fabric subjected to a reciprocating motion (*7*, *9*, *13*, *18*) over a pulley. Flex tests designed to test tread-cracking have been used to some extent to evaluate ply separation in plied fabric samples (*17*, *19*). The essential characteristics of the different types of flex tests have been summarized in several publications (*2*, *3*, *6*, *15*).

A new form of hysteresis test has been developed in this laboratory and used for a number of years here and in several other laboratories in the study of both rubber and rubber-fabric compositions at ordinary and elevated temperatures. It involves applying a definite compressive load to the bottom face of a test piece through a lever system having a high inertia, imposing on the upper face of the sample an additional high-frequency cyclic compression of a definite amplitude, and measuring with a thermocouple the temperature rise at the base of the sample. Because of the high inertia and low natural period of the lever system, practically none of the high-frequency vibration is transmitted to the loading lever, although the lever does move to compensate for the slow changes in the sample caused by permanent set and other structural changes. Light loads and high-frequency vibrations of low amplitude cause the temperature to rise to some equilibrium value; heavier loads and larger deflections produce a complete breakdown on the sample. Samples may be tested under a constant applied load, a constant initial compression, or at constant deflection during the test. The change in height of the test piece can be measured continuously during flexure and the degree of softening or stiffening, the effect of anisotropic differences in structure or modulus changes over a range of temperatures can also be observed. The test piece is of a convenient size so that test specimens may be obtained directly from manufactured articles.

Description of the Machine

The assembled machine[1] is shown in Figure 2 and the essential parts of the system are sketched in Figure 1 and may be described briefly as follows:

The test piece, 3, is placed between anvils covered with hard rubber, 2 and 4. The top anvil, 2, is connected through 1 to an adjustable eccentric usually driven at 1800 r. p. m. The load, 10, is applied by means of the lever, 6, resting on knife-edge 8. The moment of inertia of the lever system is increased and its natural frequency reduced, by suspending the equal weights, 11, 11, at each end of bar 6 at positions equidistant from the knife-edge. Anvil 4 can be raised and lowered relative to bar 6 by means of a calibrated micrometer device, 7, 7. With this device the bar may be maintained in a horizontal position during a test, as indicated by pointer 12 and a reference mark on the bar. The dimensions indicated in the legends of Figures 3 and 4 have proved satisfactory for tests on rubber samples of any Shore durometer hardness from 20 to 80 and also on rubber-fabric samples.

The temperature rise at the base of the sample is determined by means of a thermocouple placed at the center of the bottom anvil as illustrated in position 6, Figure 4, Section *AA*. To keep the sample in contact with the insulated anvils during the entire compression cycle, the total length of the compression stroke must be less than about twice the initial compression of the test piece. The length of the compression stroke is adjusted by means of the vernier and scale on the eccentric shown in position 8, Figure 3.

The machine is equipped with an oven shown in position 1 in Figure 3. The base of the oven is permanently fastened to the frame, as shown in position 8 of Figure 4. The top or oven proper slides in place and can be removed in an instant when not in use. The oven is insulated with 0.5-inch asbestos board and is equipped with two 125-watt heaters, a thermoregulator, a squirrel-cage fan for circulating the air, and a small light that is automatically turned on when the oven door is open.

The dimensions of the machine have been selected to accommodate cylindrical rubber test pieces 1 inch high and 0.7 inch in diameter. These may be conveniently cut from larger blocks or from manufactured articles, using a cylindrical cutting tool either in a drill press or lathe. Laminated test pieces also may be built up without the use of adhesive from thin disks 0.7 inch in diameter arranged horizontally in the machine. Smaller or larger test pieces may be used if necessary. When testing rubber-fabric compositions it is sometimes more convenient to use rectangular samples.

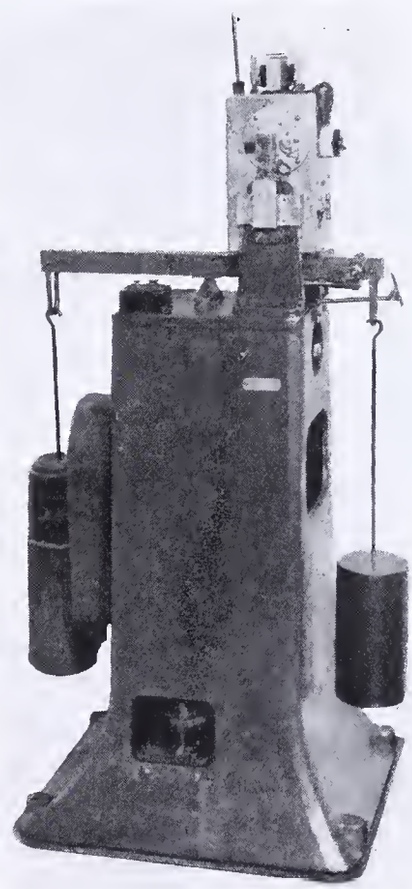

FIGURE 2. PHOTOGRAPH OF ASSEMBLED MACHINE

To adjust the micrometer device before starting a test, the top anvil is raised as far as the eccentric will permit and a piece of brass 1 inch high is inserted between the plates. The calibrated micrometer is set at zero and the pointer, 12 (Figure 1), is set on

[1] These machines may be obtained from the Ferry Machine Co., Kent, Ohio.

a mark on the end of the lever bar to locate the zero position. When the test piece is inserted and the load applied the bar is again returned to its zero position by turning the micrometer mechanism. The static compression under load is then read directly on the micrometer scale to 0.001 inch.

The lever bar is adjusted to zero position at intervals to determine the change in the mean height of the sample during flexure. The permanent set is taken as the per cent difference in height between the original unstressed test piece at room temperature and the height of the unstressed test piece at room temperature after flexure, referred to the original height.

The temperature rise, measured at the base of the sample, depends not only upon the heat generated, but also upon the conductivity and emissivity of the test piece, the conductivity of the insulators, etc. If necessary, the observed temperatures may be corrected for differences in conductivity, but in practice this and other corrections may be neglected and the stocks compared on a basis of actual temperature rise at the base of the test piece. The amount of heat lost through the insulators varies with the temperature, but this factor does not change the relative characteristics of compounds when tested at any given oven temperature.

Applications to Rubber Compounds

Effect of Cure on Heat Generation. The properties of some rubber compounds are sensitive to the time of cure while with others the properties change very slowly over a wide range of cures. If the time of cure is critical, the generation of heat during flexure under constant load will decrease substantially as the time of cure is lengthened until a minimum heat generation is obtained for the optimum cure. With a further increase in the time of cure the observed temperature will again exceed the minimum. A "flat-curing" stock behaves similarly, except that the changes in heat generation are less pronounced, especially for the overcures.

Figure 5 illustrates some effects of time of cure on the heat generation of two compounds during flexure, and shows the rates at which equilibrium temperatures are reached with ordinary conditions of testing. In Figure 5*A* the temperature rise decreases rapidly with increased time of cure until a 45-minute cure is obtained and more slowly to the 90-minute cure. In Figure 5*B* the heat generation for compound *B* increases as the time of cure is increased from 30 to 90 minutes, probably because of reversion.

The time of cure that is necessary to obtain the minimum heat generation may vary with the applied load used in the test. When Figures 5*B* and 5*B*-1 are compared, it will be noted that the relative positions of the graphs for the 30- and 45-minute cures are reversed when the applied load is increased. The compound requires a longer cure for the minimum heat generation at the higher load. Not all stocks show the reversal illustrated in Figures 5*B* and 5*B*-1. The behavior of two different compounds over a range of applied loads is shown in Figure 6. The relative differences between the heat generated for the different cures increase as the load is increased but the relative order is unchanged. For these compounds the temperature rise for the overcure is only slightly higher than for the optimum cure.

Effect of Pigmentation. The graphs in Figure 7 illustrate the nature of the temperature curves obtained with stocks containing 0 to 30 parts by volume of carbon black on 100 of rubber with 3.5 parts of sulfur and 6.0 parts of litharge, cured 75 minutes at 280° F. Litharge was used as an accelerator because it gives the same rate of cure with different amounts of black.

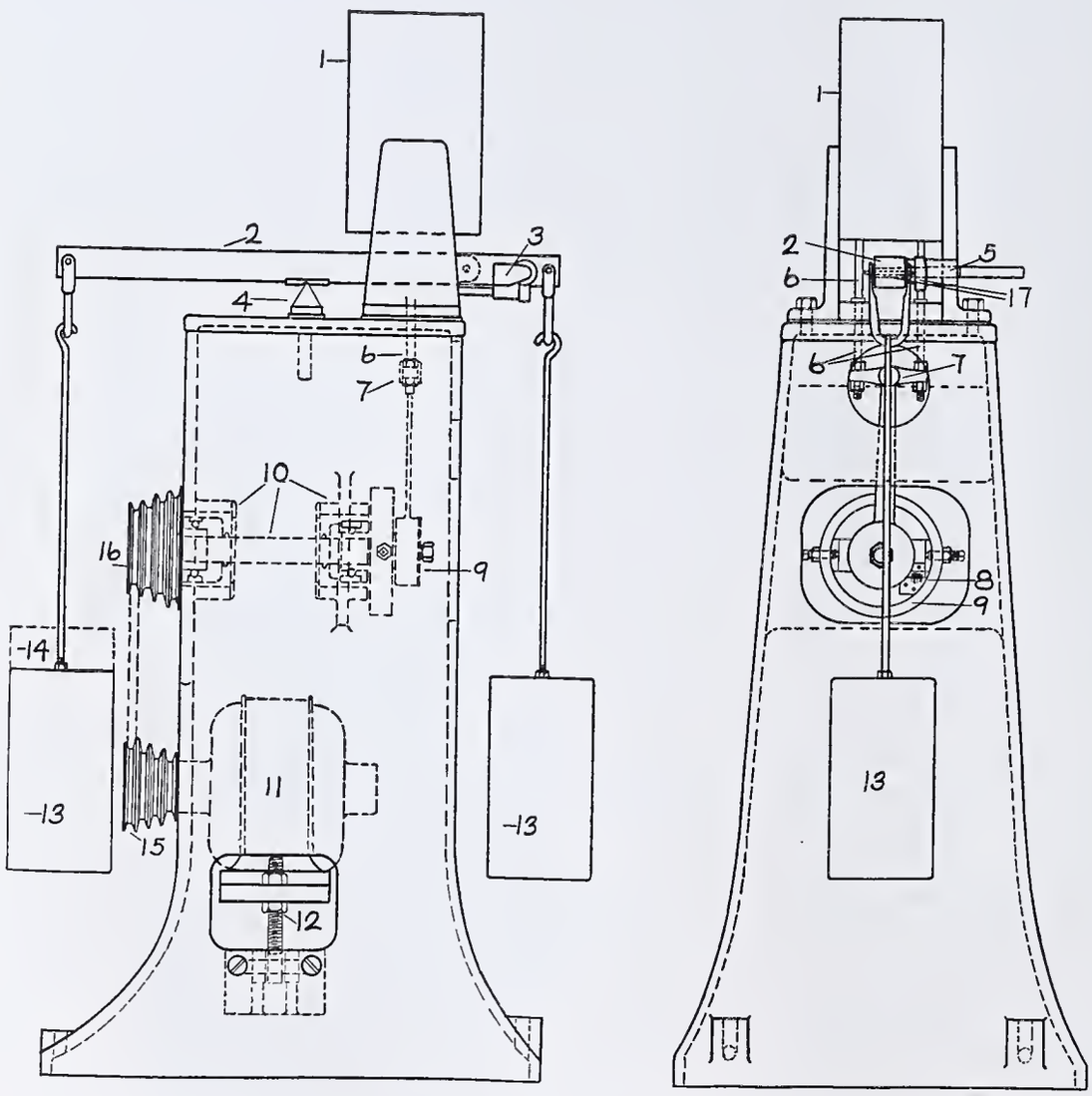

Figure 3. Side and Front Views

1. Oven, thermostatically controlled
2. Balance bar, 24 × 1.5 × 1.5 inches
3. Mechanism for raising and lowering bottom anvil with accessory mechanism to read this movement to 0.001 inch
4. Fulcrum, a knife-edge on which 2 is balanced
5. Tapered rod by means of which 2 may be held in position to avoid initial impulse when motor is started
6. Rods connecting upper anvil to driving mechanism
7. Bearing and connecting rod to eccentric
8. Vernier and scale for gaging eccentricity
9. Housing for eccentric
10. Shaft and bearing to rotate eccentric
11. Motor
12. Mechanism for adjusting height of motor and tension on belt
13. Inertia weights (50 lb.)
14. Load
15, 16. Pulleys arranged to give four speeds
17. Calibrated mechanism for reading height of bottom anvil relative to a reference point

Distance between points of suspension of inertia weights and fulcrum is 11.35 inches and distance between loading platform and fulcrum is 5 inches.

The test pieces, 1 inch high by 0.7 inch in diameter, were flexed at room temperature under an applied load of 140 pounds per square inch and a compression stroke of 0.175 inch. The temperature rise varied from 27° F. for the gum stock to 90° F. for the 30-volume gas black stock. Although the flexure was continued for 80 minutes in order to show the types of graphs obtained, a practical differentiation may be obtained in 25 minutes.

Changes in the formulation of a compound that do not appreciably change the hardness may cause substantial changes in heat generation—e. g., for a group of compounds differing only in acceleration and all having an initial compression of 24 to 25 per cent under the same load, the temperature rise varied from 13° to 52° F. For another group differing in pigmentation and having an initial compression of 15 to 17 per cent, the temperature rise during flexure varied from 98° to 165° F.

Changes in Modulus or Structure during Flexure. Some rubber compounds may stiffen as the temperature rises during flexure, others may remain unchanged, and some may soften. These effects may be caused by thermal expansion, or by phenomena associated with the Joule effect or changes in structure. They may be detected by observing the change in height of the test piece during flexure and comparing this figure with the permanent set of the test piece after it is removed from the machine and cooled. If the decrease in sample height during flexure is greater than the permanent set the sample softens during flexure—i. e., there is a reversible decrease in modulus. If the height of the test piece increases during flexure, or if the decrease in height is less than the permanent set, the compound stiffens during flexure.

Table I. Effect of Carbon Black Loading on Structure and Heat Generation during Flexure

Compound	Volume Loading of Gas Black	Temperature Rise during Flexure ° F.	Change in Height during Flexure %[a]	Permanent Set %[a]	Increase in Height Caused by Reversible Structural Changes %[a]
A	0	27	+1.0	1.1	2.1
B	10	37	+0.6	1.4	2.0
C	20	56	−1.0	3.1	2.1
D	30	89	−6.2	8.8	2.6

[a] Based on initial height of test piece.

The changes in height during flexure observed for the carbon black stocks mentioned above are graphed in Figure 8 and are compared to the permanent set in Table I. All the data are expressed as per cent change based on the initial height of the uncompressed test piece. For compound *D* in Table I, the permanent set is 8.8 per cent, while the recorded decrease in height during flexure is only 6.2 per cent. The height during flexure was, therefore, 2.6 per cent greater because of a reversible increase in modulus.

All these compounds stiffen slightly. By way of further illustration these effects may be noticed for the several compounds listed in Table II.

Breakdown Tests. If the load applied during flexure is increased sufficiently, the test piece may be made to blow out or fracture. Figure 9 represents the behavior of two different rubber compounds under identical testing conditions. Compound *A* blew out in 60 minutes, while compound *B* was in excellent condition even after 150 minutes of flexure. The primary inflection point observed for compound *A* has been

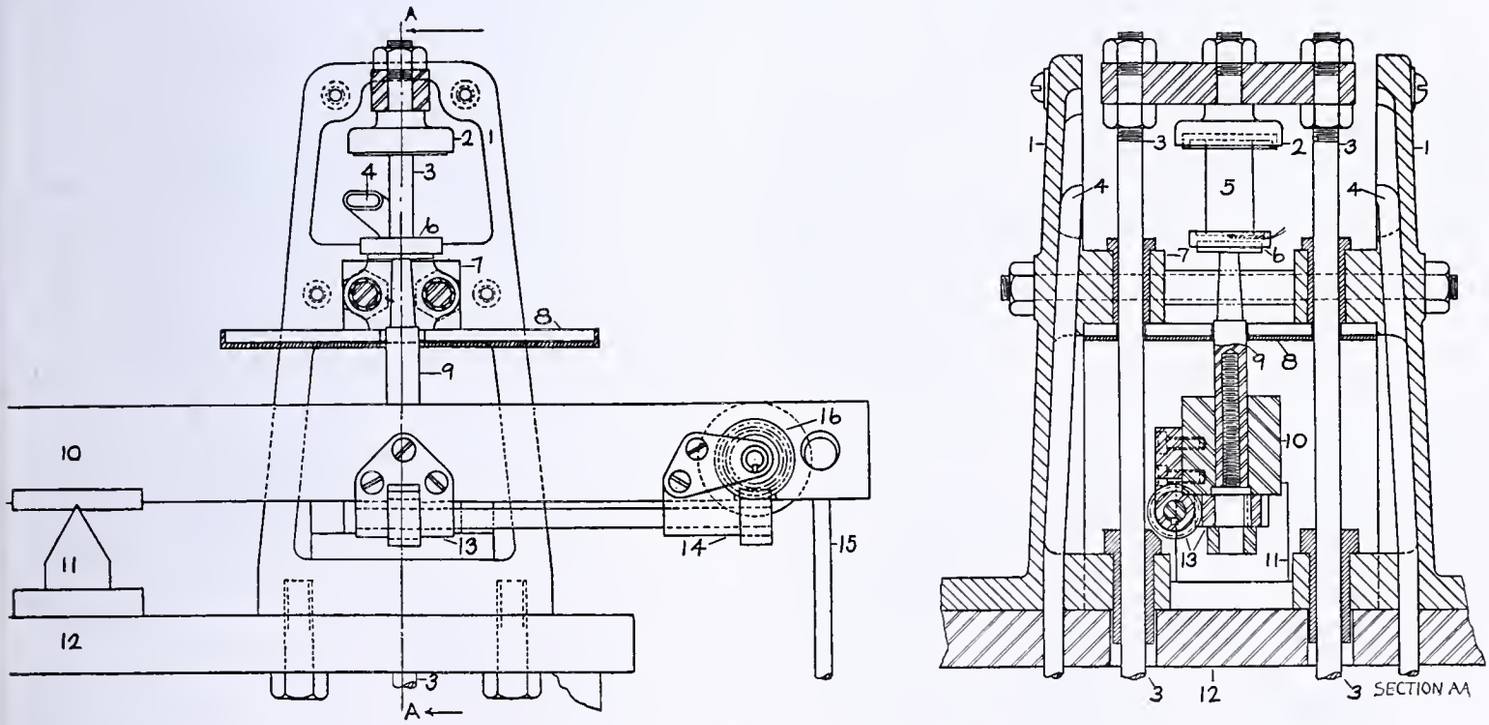

Figure 4. Side and Front Views with Oven Omitted

1. Frame holding bearings and oven
2. Upper anvil driven through rods, 3; hard-rubber insulation 0.1 inch thick
3. Rods connected to eccentric as shown by 6 and 7 in Figure 3
4. Concealed air vent for producing windage or cooling when desired
5. Test piece (Section *AA*)
6. Lower anvil showing hard-rubber insulator 0.1 inch thick and showing position of thermocouple (Section *AA*)
7. Bearing
8. Base of oven. Entire oven can be lifted from base at any time.
9. Support for lower anvil. Anvil is raised or lowered by screw and gears 13, 14.
10. Inertia bar
11. Fulcrum
12. Frame
13, 14. Gears by means of which vertical position of 9 or 6 is adjusted
15. Rods supporting inertia weights
16. Mechanism for turning gears 13 and 14. Calibrated to read height of sample to 0.001 inch from zero point level of bar. Zero point indicator omitted here is shown, 12, in Figures 1 and 2.

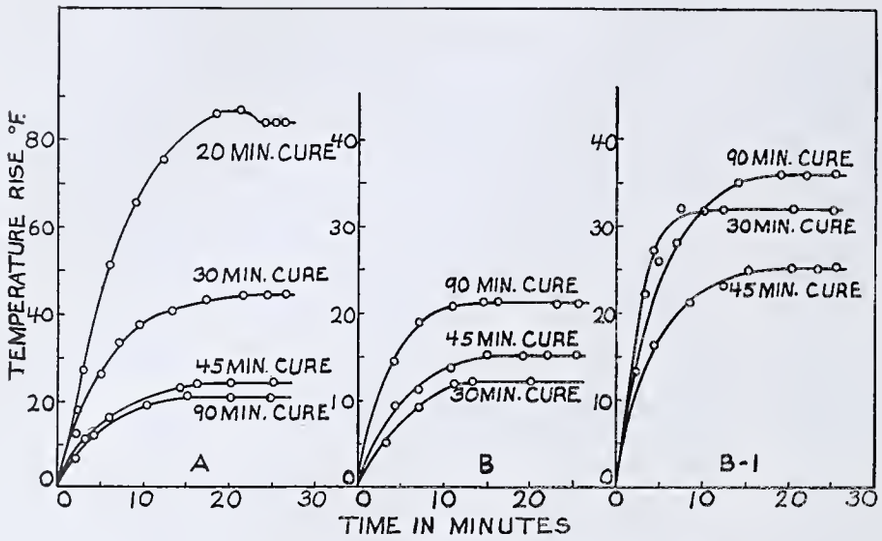

FIGURE 5. VARIATION IN TEMPERATURE RISE WITH CURE AND LOAD

A. D. P. G., 9 carbon black, 15% ZnO. Applied load of 62 lb./sq. inch
B. High gum-Captax stock. Applied load of 62 lb./sq. inch
B-1. High gum-Captax stock. Applied load, 122 lb./sq. inch. Compression stroke, 0.25 inch

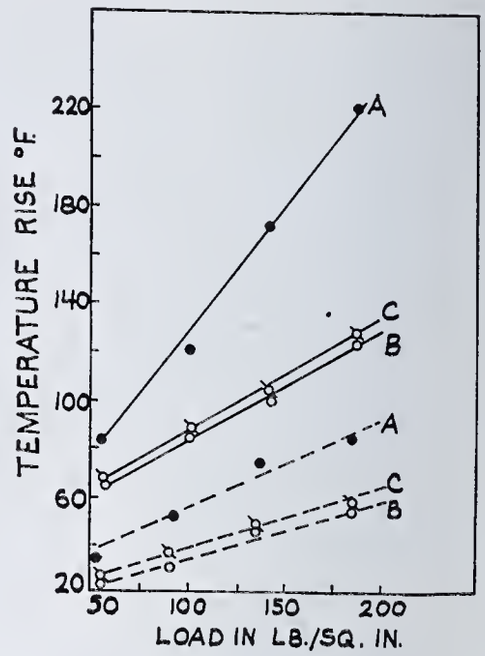

FIGURE 6. EFFECT OF APPLIED LOAD ON TEMPERATURE RISE

A, 60-minute cure; *B*, 110-minute cure; *C*, 160-minute cure
——— 50% carbon black stock
- - - - - 5% zinc oxide stock

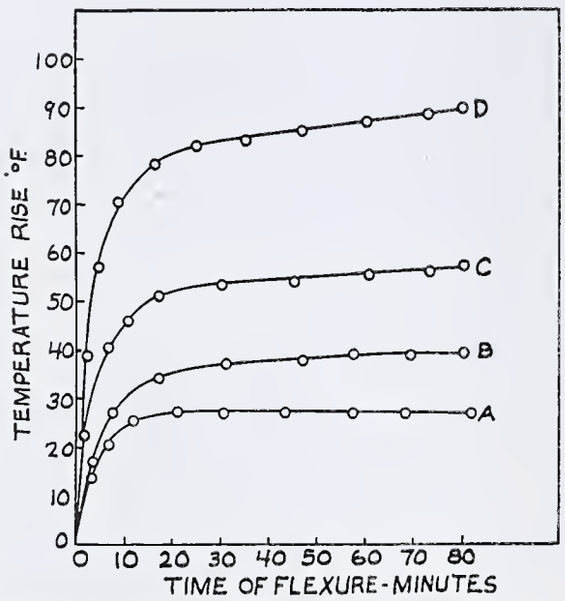

FIGURE 7. TEMPERATURE RISE USING VARIOUS PERCENTAGES OF CARBON BLACK

Volume loading: *A*, 0%; *B*, 10%; *C*, 20%; *D*, 30%

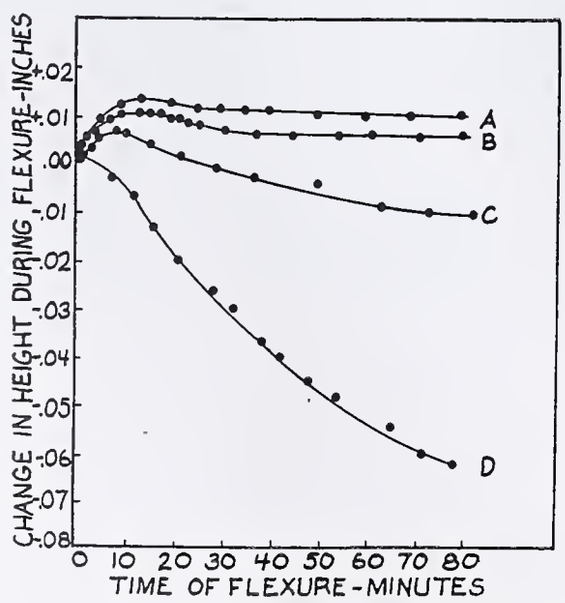

FIGURE 8. CHANGE IN HEIGHT OF FLEXURE USING VARIOUS PERCENTAGES OF CARBON BLACK

Volume loading: *A*, 0%; *B*, 10%; *C*, 20%; *D*, 30%

of no practical importance for comparing breakdown characteristics of rubber compounds and may be entirely absent when the test is greatly accelerated or when reversion does not occur.

Some types of pigmentation produce stocks that run cooler during flexure but are mechanically weaker than stocks that revert. These stocks may break down or crumble under high loads. It is therefore important that the loads used in testing such stocks should be of the same order of magnitude as those encountered in service, allowing for a reasonable factor of safety. It has been reported (*4*) that the time of "blowout" of rubber compounds is related to the hysteresis of the compound or the heat generated during flexometer tests. There are, however, exceptions in practice because of the different types of fracture possible. If, as mentioned above, the compound fractures without reverting, the time to produce breakdown under high load may be shorter than for a reverting compound in spite of the fact that at the lower loads the heat generated may be less.

TABLE II. STRUCTURAL CHANGES IN SEVERAL COMPOUNDS DURING FLEXURE

(Flexed 75 minutes under an applied load of 155 pounds per square inch)

Pigment Loading	Change in Height during Flexure	Permanent Set	Modulus Changes during Flexure
	%	%	
1. Gas black 20%, whiting 15%, tire reclaim 18%	−25	20	Softens
2. Gas black 4%, clay 28%, reclaim 20%	−34	46	Stiffens
3. Zinc oxide 19%, soft black 16%, whiting 37%	− 2.5	3.7	Not much change
4. Zinc oxide 4%	+ 2.5	0.0	Stiffens

ANISOTROPY. Havenhill (*10*) has shown that anisotropy in rubber compounds can be detected by means of flexometer tests. When the length of a pigment particle is greater than the other two dimensions, or when two dimensions are much larger than the third dimension, it has a tendency to orient itself in the rubber during mixing and calendering with the long axis or plate surface parallel to the direction of rotation of the mill or calender rolls. It has been found that when this pigment orientation is retained in the cured rubber, the heat generation obtained during flexing will be greater if the

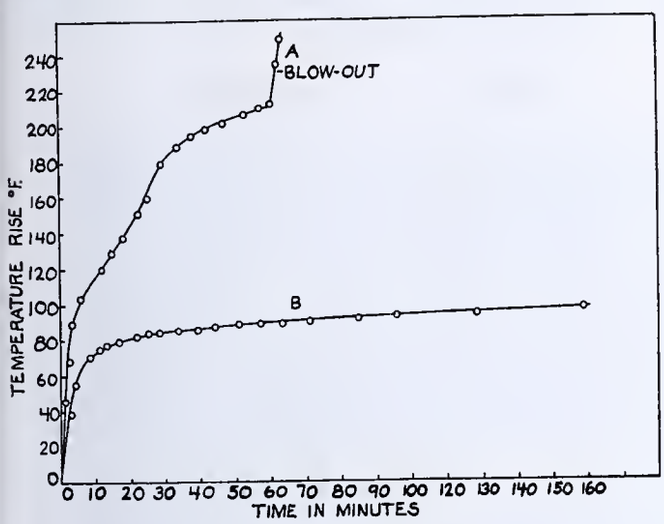

FIGURE 9. FATIGUE TEST

A. Loaded with channel black, 25 parts, and zinc oxide, 132 parts
B. Loaded with soft black, 51 parts, and zinc oxide, 10 parts.
Applied load: 180 lb./sq. inch. Compression stroke, 0.25 inch

lexure is directed parallel to the long axis of the pigment articles or parallel to the plate surface than when flexure is irected parallel to the short axis of the pigment particles. Havenhill kindly donated for this test compounds containing riented particles of Suprex clay and asbestine. The results btained from the flexure of these compounds are graphed in igure 10.

Anisotropy can sometimes be detected in high-gum stocks, especially when the stock is calendered in thin sheets at comparatively low calender temperatures. The effect, however, s usually small and may be eliminated by holding the stocks t an elevated temperature before they are cured, for a time dependent upon the degree of anisotropy that may occur.

Applications to Rubber-Fabric Compositions

When rubber-fabric compositions are constructed so that a definite angle is obtained between cords in alternate plies, test pieces may be cut from the cured composition in two directions as indicated in Figure 11*A*. The flexure characteristics of these test pieces may then be compared for different rubber compounds. If any cord angle other than 90° is chosen, one test piece may be obtained having cord angles of less than 90° as in Figure 11*B*, and another may be obtained having cord angles greater than 90° as in Figure 11*C*. The tendency for cord separation in the type *C* test piece is greater than for type *B* because the compressive force causes a greater strain between cord and rubber. This type of test piece is useful in studying the resistance to cord separation in compositions having similar cord structures. On the other hand, since the tendency for the cord separation is diminished for the type *B* test piece, this type is more useful for the study of differences in heat generation in such structures.

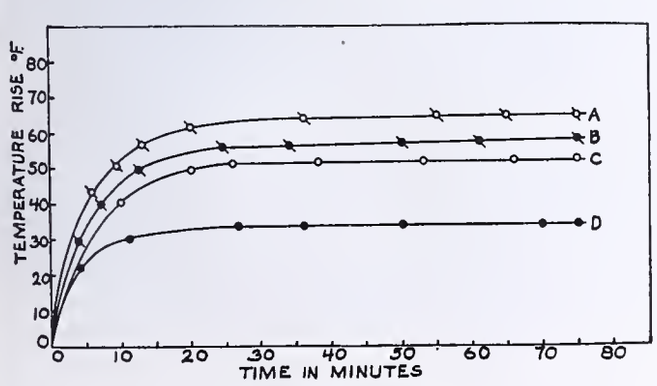

FIGURE 10. ANISOTROPY

A. Suprex-clay filler. Flexure parallel to plate surface of pigment
B. Suprex-clay filler. Flexure normal to plate surface of pigment
C. Asbestine filler. Flexure parallel to long axis of pigment
D. Asbestine filler. Flexure normal to long axis of pigment
Applied load, 143 lb./sq. inch. Compression stroke, 0.25 inch. Filler, 25.6 volumes

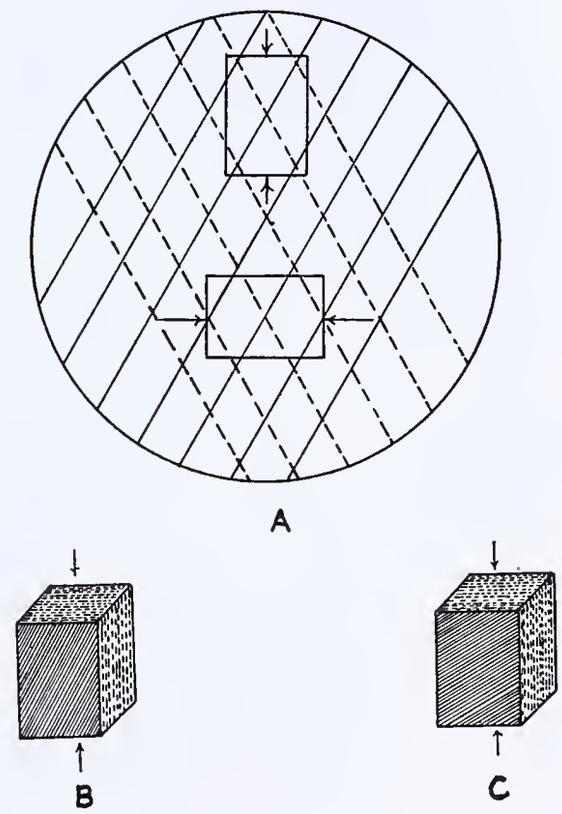

FIGURE 11. APPLICATION TO RUBBER-FABRIC COMPOSITIONS

The study of rubber-fabric compositions may follow the same procedure as for rubber compounds. Tests may be made to produce equilibrium temperatures or the load may be increased to produce breakdown. The test pieces may be subjected to a constant applied load, or, when comparing a series of compositions, the load may be adjusted from one composition to the other in order to obtain compressions of similar magnitude.

Summary

The Goodrich flexometer is of simple design and is easily operated at ordinary or elevated temperatures. Test pieces procured from laboratory specimens or from finished rubber or rubber-fabric products may be tested, using moderate loads that produce equilibrium temperatures during flexure or larger loads that rupture the test piece. This machine may be used to study the effects on heat generation of the time of cure, the magnitude of the applied load, changes in pigmentation, and variations caused by anisotropy in rubber compounds. It is so designed that the structural changes such as softening or stiffening may be followed during the period of flexure.

Literature Cited

(1) Abbott, IND. ENG. CHEM., 20, 853 (1928).
(2) Am. Soc. Testing Materials, "Standards on Rubber Products," Committee D11, p. 51 (October, 1935).
(3) Am. Soc. Testing Materials "Symposium on Rubber," p. 76 (March 9, 1932).
(4) Barnett, C. E., and Mathews, W. C., IND. ENG. CHEM., 26, 1296 (1934).
(5) Cooper, L. V., *Ibid.*, Anal. Ed., 5, 350 (1933).
(6) Dawson and Porritt, "Rubber—Physical and Chemical Properties," pp. 309, 359, 392, Research Association of British Rubber Manufacturers, 1935.

(7) Depew and Jones, *Proc. Am. Soc. Testing Materials*, **30**, Part 2, 965 (1930).
(8) Depew and Snyder, *Rubber Age (N. Y.)*, **25**, 371 (1929).
(9) Gibbons, W. A., Ind. Eng. Chem., Anal. Ed., **2**, (1930).
(10) Havenhill, R. S., *Physics*, **7**, 179 (1936).
(11) Havenhill, R. S., and MacBride, W. B., Ind. Eng. Chem., Anal. Ed., **7**, 60 (1935).
(12) Kimmich, E. G., *Proc. Am. Soc. Testing Materials*, **30**, Part 2, 957 (1930).
(13) Krall, Stanley, U. S. Patent 1,954,483.
(14) Martens, A., *Sitzber. kgl. preuss. Akad. Wiss.*, **1911**, XIV, 346.
(15) Memmler, "Science of Rubber," English tr. by Dunbrook and Morris, New York, Reinhold Publishing Corp., 1934.
(16) Neal and Northam, Ind. Eng. Chem., **23**, 1449 (1931).
(17) Nellen, A. H., *Rubber Age (N. Y.)*, **24**, 373 (1928).
(18) Sturdevant, W. L., *India Rubber World*, **83**, 67 (1930).
(19) Torrance, P. M., and Peterson, L. C., *Ibid.*, **80**, 62 (1929).
(20) Vogt, *India-Rubber J.*, **64**, 558 (1922).

Received September 25, 1937. Presented before the Division of Rubber Chemistry at the 94th Meeting of the American Chemical Society, Rochester, N. Y., September 6 to 10, 1937.

Direct Determination of Eleostearic Acid in Tung Oil—Correction

In the article on "Direct Determination of Eleostearic Acid in Tung Oil" [Ind. Eng. Chem., Anal. Ed., **9**, 103 (1937)] in Table IV the deviations from means are not in accord with the corresponding percentages of eleostearic acid, which have been rounded off to one decimal place.

The retention of four significant figures in the percentages of eleostearic acid is warranted by the fact that all experimental data used in calculation contain at least four significant figures. The results of Table IV serve to show not only the precision ratio but also the concordance between the percentages of the acid determined in different runs. On this account these percentages and the deviations as listed in this table carry two decimal places, so as to show the degree of concordance and the magnitude of deviations better than the numbers with one decimal place would do. The average deviations from means thus contain one or two significant figures. The arithmetical mean when introduced in the calculation of the precision ratio may therefore be rounded off to two significant figures. It need not, however, be rounded off before calculation. Table IV should read as follows:

Table IV. Precision of the Method

Experiment Number	Shiao Mee Tung: Eleostearic acid, uncorrected	Shiao Mee Tung: Deviation from arithmetical mean	Ta Mee Tung: Eleostearic acid, uncorrected	Ta Mee Tung: Deviation from arithmetical mean	Tsai Tung: Eleostearic acid, uncorrected	Tsai Tung: Deviation from arithmetical mean
	%	%	%	%	%	%
1	76.99	0.02	76.48	0.10	75.85	0.10
2	77.04	0.07	76.44	0.06	75.76	0.01
3	77.02	0.05	76.51	0.13	75.82	0.07
4	76.91	0.06	76.31	0.07	75.63	0.12
5	77.10	0.13	76.24	0.14	75.86	0.11
6	76.87	0.10	76.48	0.10	75.81	0.06
7	76.97	0.00	76.26	0.12	75.67	0.08
8	76.85	0.12	76.29	0.09	75.62	0.13
		Av. 0.07		Av. 0.10		Av. 0.09
Arithmetical mean	76.97		76.38		75.75	
Average deviation/arithmetical mean		0.9 part per 1000		1.3 parts per 1000		1.2 parts per 1000

P. S. Ku

The Stability of Solid Sodium Thiosulfate

VICTOR K. LA MER, Columbia University, New York, N. Y., and
HAZEL M. TOMLINSON, Temple University, Philadelphia, Pa.

In 1932, La Mer and Kamner (*3*) found that a particular sample of sodium thiosulfate yielded steadily drifting velocity constants when employed as a reactant in the bromoacetate thiosulfate reaction, whereas with other samples nondrifting constants were obtained. The difficulty disappeared on recrystallization of the thiosulfate. The puzzling feature however, was that this particular sample of thiosulfate had been recrystallized with considerable care previously (1929–31) by La Mer and Fessenden (*2*), who obtained excellent kinetic results with the sample at that time. La Mer and Kamner, accordingly, suggested that sodium thiosulfate in the solid phase probably undergoes a slow decomposition into sulfur and sodium sulfite. Such instability would not ordinarily be detected in analytical work, but would, of course, seriously interfere with the kinetics of a reaction presumed to involve only bromoacetate and thiosulfate.

In resuming the kinetic studies of this reaction (1937), the authors have had occasion to use a thiosulfate sample twice recrystallized from water below 60° C. by Percival (*4*) in 1933. This sample proved entirely satisfactory in his work on the *N*-chloroacetanilide rearrangement. Four years later, this solid sample forms cloudy aqueous solutions which give positive tests for sulfite (*1*). When a portion was once recrystallized, the clear aqueous solution was sulfite-free. Moreover, when a solution of Percival's thiosulfate was used (1937) in kinetic studies of the bromoacetate-thiosulfate reaction, reproducible velocity constants were obtained but they exhibited almost identical drifts with time, the puzzling behavior encountered by Kamner in 1932.

Approximately 0.01 *M* solutions were prepared from the previously and newly purified crystals using identical treatment of containers, carbon dioxide-free water, and protection from light. Aliquot portions of both solutions were titrated frequently against the same iodine solution, using the same indicator solution, after the same time intervals over a period of 2.5 summer months. From thirteen such titrations, the average titer remained constant over this period to within one part per thousand both for old and recrystallized salt.

Although the investigation is incomplete, these findings are submitted for their analytical interest, since it appears that the constancy of the titer of a thiosulfate solution is not a sufficiently adequate criterion of its stability for application to kinetic and other sensitive types of experimentation.

Summary

Sodium thiosulfate decomposes slowly in the solid state to sulfur and to some substance giving the analytical tests for sodium sulfite. The deterioration of solutions of freshly recrystallized thiosulfate is not more rapid than that of solutions prepared from crystals not recrystallized recently.

Literature Cited

(1) Curtman, "Qualitative Chemical Analysis," p. 468, New York, Macmillan Co., 1932.
(2) La Mer, V. K., and Fessenden, R. W., *J. Am. Chem. Soc.*, **54**, 2351 (1932).
(3) La Mer, V. K., and Kamner, M., *Ibid.*, **57**, 2669 (1935).
(4) Percival, J. O., and La Mer, V. K., *Ibid.*, **58**, 2413 (1936).

Received October 20, 1937.

MICROCHEMISTRY

Courtesy, J. R. Rachele and J. T. Bryant

Azoxybenzoate in Polarized Light

Qualitative Separations on a Micro Scale

III. Analysis of the Selenium Group of Noyes and Bray

A. A. BENEDETTI-PICHLER AND JULIAN RICHARD RACHELE
Washington Square College, New York University, New York, N. Y.

A procedure for the qualitative microanalysis of the selenium group of Noyes and Bray has been carried out, permitting the isolation and approximate estimation of selenium, germanium, and arsenic when starting with a solid sample of 1-mg. weight. Five micrograms of any of the three elements can safely be detected, even when accompanied by a hundredfold excess of the other two elements of this group. A screw clamp for microcones enables the simple performance of pressure digestions. A buzzer is used to accelerate the formation of precipitates.

IN THE development of a general scheme for the inorganic qualitative analysis of milligram samples (*3*), it was necessary to provide for the separation, isolation, and estimation of the elements of the selenium group of Noyes and Bray—namely, selenium, arsenic, and germanium. The plan adopted is, in general, that given by Noyes and Bray in their well-known book (*7*), but several changes had to be made in its application to small samples. In the selenium group, the outline of separation is practically the only part of the original scheme which is retained.

Procedure

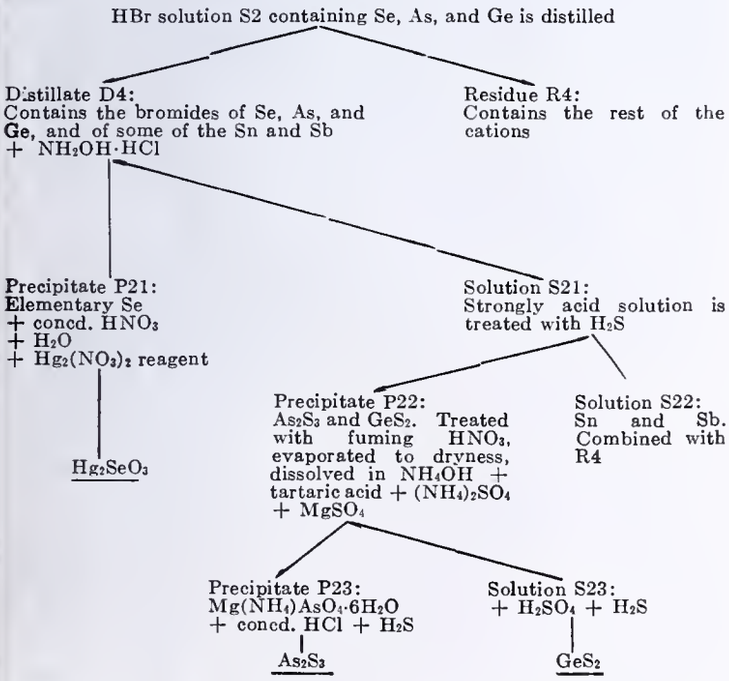

The numbers of the precipitates and filtrates coincide as far as possible with the corresponding paragraph numbers of the scheme of Noyes and Bray.

The hydrobromic acid–bromine solution, S2, is prepared according to the directions of Noyes and Bray (*7*), and should have a volume between 20 and 30 cu. mm. In the work described in this paper, mixtures of 1 per cent and 5 per cent solutions of selenium dioxide and of sodium arsenate, and a 1 per cent solution of sodium germanate were used. If the volumes of stock solutions necessary to give the required amounts of the metals became too large, the mixtures were evaporated to dryness in the distilling tube previous to the treatment with hydrobromic acid and bromine.

The isolation of the selenium group is performed according to the directions given in a previous paper (*1*). The distillation is carried out at 95° to 100° C. until a dry residue is obtained. The fractions collected are combined in a microcone (*4*) and considered as distillate D4.

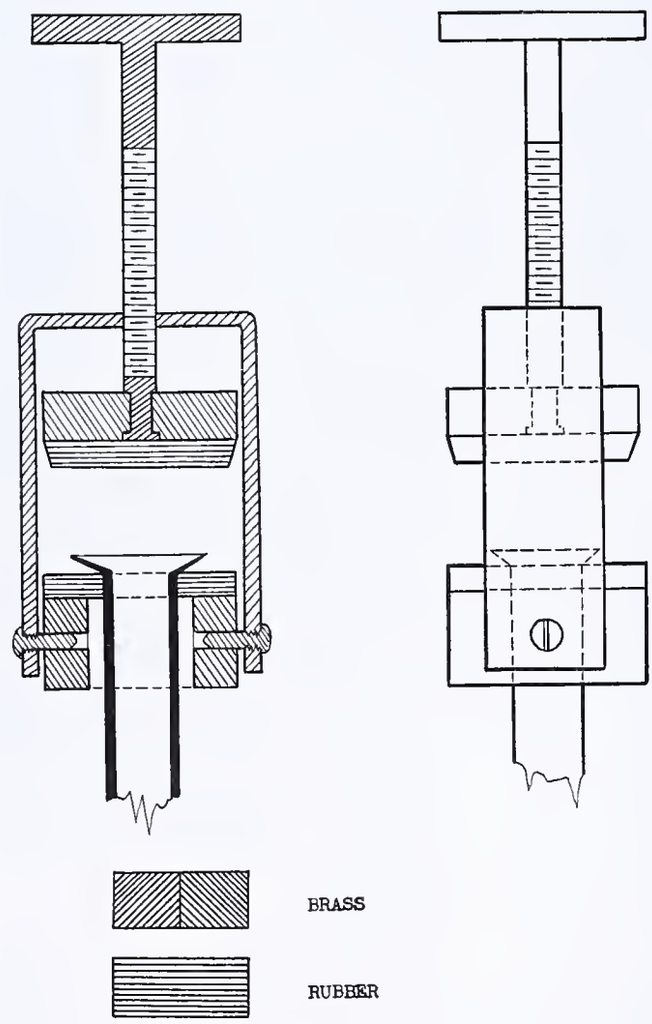

FIGURE 1. PRESSURE CAP FOR MICROCONES

ISOLATION OF SELENIUM. A 3 *M* solution of $NH_2OH \cdot HCl$ is added to distillate D4 in portions of approximately 1 cu. mm. with the use of a capillary pipet, until the solution becomes colorless—i. e., until the bromine is reduced. Then a 5 cu. mm. excess of the reagent is added. The cone is closed with a small brass pressure cap (Figure 1) and then placed in a steam bath for 5 minutes. The use of the pressure cap prevents the loss of germanium and arsenic.

The selenium is deposited as a fine red precipitate which, on prolonged heating, is converted to a more compact black form. The time required for the conversion depends on how closely the red selenium is packed. However, it is immaterial whether or not the conversion is allowed to take place. The precipitate and the solution are separated in the usual way with the use of centrifuge and capillary pipet (*2*). The precipitate is washed twice with 10 cu. mm. of water and the washings are combined with the filtrate.

ESTIMATION OF SELENIUM. The elementary selenium, P21, is dissolved by warming with 5 cu. mm. of fuming nitric acid.

Another portion of the acid is added if solution is not complete. The solution is diluted with 0.1 ml. of water. Then 2-cu. mm. portions of mercurous nitrate reagent are added until no more precipitate forms on further addition. The reagent is prepared according to Denigès (*6*) by dissolving 10 grams of mercurous nitrate in 10 ml. of nitric acid (sp. gr., 1.39) and 100 ml. of water. The precipitate of mercurous selenite is collected by centrifuging, and its volume is compared with that of precipitates obtained by direct precipitation of known amounts of selenite.

Separation of Arsenic and Germanium from Tin and Antimony. Solution S21 is made 6 *M* with respect to H^+ by the addition of concentrated hydrochloric acid. The solution is treated at room temperature with hydrogen sulfide (*2*) until precipitation of the sulfides of arsenic and germanium is complete. The precipitate is digested for a few minutes by heating the sealed cone in a steam bath. Solution and precipitate are separated by centrifuging and the solution containing tin and antimony is first heated to expel the hydrogen sulfide and then combined with residue R4 of the distillation.

Separation of Arsenic and Germanium. Sulfide precipitate P22 is treated with 20 cu. mm. of fuming nitric acid and the mixture is first heated on the steam bath until the sulfides are completely decomposed and then evaporated to dryness by inserting the cone in an aluminum block heated to about 130° C. A stream of air from a capillary directed at the surface of the solution aids in the evaporation.

The residue is dissolved in about 30 to 40 cu. mm. of dilute ammonium hydroxide. Then 20 cu. mm. of a 50 per cent tartaric acid solution, 25 cu. mm. of a 1 *M* ammonium sulfate solution, and 25 cu. mm. of a 0.5 *M* magnesium sulfate solution are added. The mixture is made ammoniacal and is boiled for half a minute on the steam bath with stirring. Rotating a glass thread with a beaded end against the bottom of the cone breaks up the bubbles into a fine stream. This technic prevents the contents of the cone from being expelled. A fine crystalline precipitate of magnesium ammonium arsenate is formed. The tartaric acid prevents the precipitation of magnesium germanate (*5*). The solution is allowed to cool and is stirred vigorously during the cooling. As done in this laboratory, the cone and its content are subjected to severe agitation with the use of a buzzer described below. The cone is then placed in ice water and allowed to stand for about a half hour. The precipitate is centrifuged to the bottom of the cone and the supernatant liquid is tested with a few cubic millimeters of the magnesium sulfate solution for the complete precipitation of the arsenic. Finally solution S23 is transferred to another cone by the use of a suction capillary siphon (*4*) containing a filtering wad of asbestos. The precipitate is washed twice with 10 cu. mm. of 1 per cent ammonium hydroxide and the washings are combined with the filtrate.

Estimation of the Amount of Arsenic. The magnesium ammonium arsenate in the cone is dissolved in concentrated hydrochloric acid and the solution is drawn through the filtering capillary to dissolve any precipitate on the asbestos. The solution is collected in a centrifuge cone and is saturated with hydrogen sulfide (*2*). The cone is closed by means of the pressure cap, and heated on the steam bath for a minute. After centrifuging, the volume of the arsenic sulfide is compared with that of precipitates obtained with known amounts of arsenic by direct precipitation with hydrogen sulfide under the same conditions.

Precipitation of Germanium as Sulfide and the Estimation of Its Quantity. Filtrate S23 is first made acid to litmus by the addition of very small volumes of 18 *M* sulfuric acid. Then an excess of 18 *M* sulfuric acid equal to one-sixth of the volume of the solution is added to make the solution 3 *M* with respect to sulfuric acid and approximately 6 *M* with respect to hydrogen ion. The solution is then saturated with hydrogen sulfide. The cone is closed with the pressure cap and its contents are digested on the steam bath for a few minutes.

The estimation of the amount of germanium is based on the volume of the centrifuged germanium sulfide precipitate and is carried out as in the case of arsenic.

The formation of a white sulfide is a sufficient confirmatory test for germanium.

Discussion of Experiments

The method outlined above gave satisfactory results with solutions of known composition which contained the elements selenium, arsenic, and germanium in the following extreme ratios:

Se:As = 1:100 and 100:1
Ge:As = 1:100
Ge:Se = 1:100

In all the mixtures 5μg. of the minor component were present.

A deviation from the procedure of Noyes and Bray was necessary in the isolation of the selenium group. Their method consists of distilling the sample with 10 ml. of 9 *M* hydrobromic acid containing some bromine until the volume of the residue is 3 ml. The exact reproduction of this procedure on the milligram scale is not feasible, since the proper time for the interruption of the distillation cannot be perceived with sufficient accuracy. If the distillation is stopped too early, complete separation of the germanium is not assured, and if the distillation is continued beyond a certain point, appreciable quantities of tin and antimony go into the distillate. It was decided to continue the distillation until a dry residue was obtained—i. e., to a stage that can be definitely recognized. In this way, a large part of the tin and a considerable amount of antimony volatilize. However, no appreciable amount of mercury was found to distill.

As to the analysis of the distillate, the original scheme of Noyes and Bray did not permit a good separation of germanium from arsenic on the micro scale or the detection of germanium even when present as high as 10 to 20 per cent of the sample weight. These authors base the separation on the precipitation of arsenic sulfide from an ammoniacal solution of the thio complexes of arsenic and germanium by the addition of hydrofluoric acid. The germanium should be retained in solution as the fluoro complex. The procedure was tried on the milligram scale with the use of centrifuge cones and capillary siphons made of platinum. The use of platinum apparatus for handling small volumes of solutions and precipitates introduces technical difficulties. In addition, it was found that some germanium precipitates with the arsenic sulfide and that large amounts of germanium were lost in the subsequent evaporation of the filtrate with sulfuric acid, probably through the formation of the volatile fluoride.

The following schemes for the separation of arsenic and germanium were tried on the micro scale without success:

Cathodic reduction of germanium to gaseous GeH_4 and subsequent combustion to a metallic germanium mirror.

Reduction of arsenic to the elementary form with stannous chloride–hydrochloric acid reagent.

Precipitation of the arsenic as the uranyl ammonium arsenate.

Distillation of germanium tetrachloride in the presence of chlorine from potassium chlorate in the acid solution, the arsenic being kept in the pentavalent state.

With the procedure finally adopted, it was found that the separation with magnesia mixture in a tartrate solution cannot be applied directly to hydrobromic acid solution S21. The bromide ion apparently reduces the arsenate ion in the ammoniacal solution, thus interfering with the precipitation of the magnesium ammonium arsenate. The bromine formed is removed by reaction with the ammonia or the hydroxylamine present, favoring the conversion of the arsenate to arsenite. Therefore, it is necessary to remove the bromide by evaporation with fuming nitric acid in cases where the absence of tin and antimony makes the preliminary separation of the arsenic and germanium as sulfides unnecessary.

Buzzer. Mention may be made here of a special use of a commonplace device. The interrupter of an electromagnetic door buzzer is fastened down so that it cannot make and break. When the buzzer is connected to the 110-volt alternating current line through a transformer, the interrupter vibrates with an almost imperceptible motion. If a centrifuge cone is held against the oscillating arm, vibrations are set up in the contents of the cone. The device has been used for the more rapid attainment of a complete precipitation of magnesium ammonium arsenate and for the acceleration of the flocculation of germanium sulfide which tends to be colloidal, especially when present in small amounts.

Literature Cited

(1) Benedetti-Pichler, A. A., and Rachele, J. R., *Mikrochemie*, **19**, 1 (1935).
(2) Benedetti-Pichler, A. A., and Spikes, W. F., "Introduction to the Microtechnique of Inorganic Qualitative Analysis," Douglaston, N. Y., Microchemical Service, 1935.
(3) Benedetti-Pichler, A. A., and Spikes, W. F., *Mikrochemie*, **19**, 239 (1936); *Mikrochemie, Molisch-Festschrift*, 3 (1936).
(4) Emich, F., and Schneider, F., "Microchemical Laboratory Manual," pp. 12, 31, New York, John Wiley & Sons, 1932.
(5) Hillebrand, W. F., and Lundell, G. E. F., "Applied Inorganic Analysis," p. 211, New York, John Wiley & Sons, 1929.
(6) Mellor, J. W., "Comprehensive Treatise on Inorganic and Theoretical Chemistry," Vol. X, p. 752, New York, Longmans, Green & Co., 1930.
(7) Noyes, A. A., and Bray, W. C., "A System of Qualitative Analysis for the Rare Elements," New York, Macmillan Co., 1927.

RECEIVED August 5, 1937. Presented in preliminary form before the Microchemical Section at the 93rd Meeting of the American Chemical Society, Pittsburgh, Pa., September 7 to 11, 1936. Abstracted from a thesis to be submitted by J. R. Rachele to the faculty of the Graduate School of New York University in partial fulfillment of the requirements for the degree of doctor of philosophy.

An Improved Method for the Determination of Iodates

VICTOR J. ANHORN AND H. HUNT, Purdue University, West Lafayette, Ind.

STARCH used as an indicator in the determination of iodine does not give a reproducible end point which warrants the determination of a fraction of a milligram of potassium iodate. The physical condition of starch solutions or their absorptive power varies and this causes the sensitivity of the end point to fluctuate. Extraction methods do not place all the iodine in a nonaqueous solution free from optically interfering aqueous layers; besides, there are extra steps involved in an extraction process. Therefore, the authors found it expedient to develop a more convenient and accurate procedure for the determination of iodine than they could find in the literature.

This paper describes inexpensive apparatus and an accurate method for determining as little as 0.3 mg. of potassium iodate. The method involves titration, with weight burets, using the color of free iodine as the indicator.

Apparatus and Procedure

A weight buret of 1-ml. capacity and weighing about 6 grams was constructed as shown in Figure 1. It was possible to regulate the flow to 0.1 mg. of solution delivered. Delivery was made below the surface of the liquid being titrated. The titrating vessel, shown in Figure 1, had a capacity of about 15 ml. The observation tube was 40 cm. in length, its sides were painted black, and the bottom was illuminated with a 150-watt blue Mazda bulb. As little as 0.0000003 gram of iodate gave a pronounced color.

The solution was stirred with compressed nitrogen, using the gas lift principle. (About 15 to 30 minutes were used for a determination.)

A blank was run with each determination. The blank contained the same concentration of acid and iodide, and was stirred at the same rate as the sample. The titration was stopped when the colors were identical in the two tubes. The analytical balance had a sensitivity of three divisions per 0.1 mg. The weights were calibrated with a Bureau of Standards set.

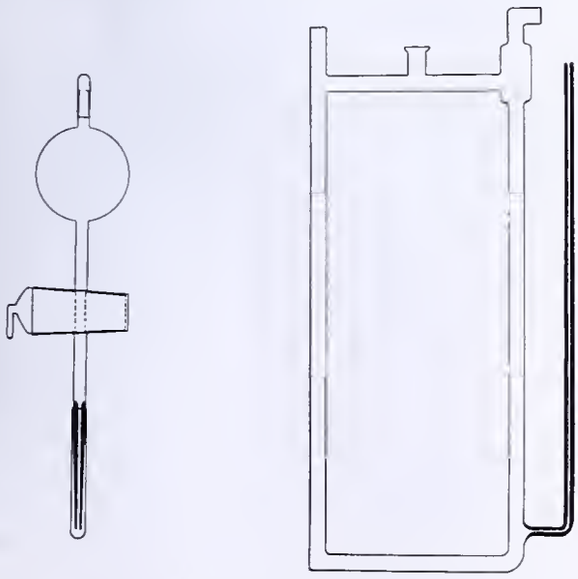

FIGURE 1. WEIGHT BURET (LEFT) AND TITRATION CELL (RIGHT)

The observation tube at right of titration cell had an approximately optically plane bottom and was open at the top.

Preparation and Standardization of Solutions

Analytical reagent sodium thiosulfate, potassium iodate (purity checked with electrolytic copper), and potassium iodide (with no free iodine) were recrystallized and carefully dried. C. P. acids and freshly distilled water (*4*) were used. All solutions were prepared by weighing the calculated amount of reagents and water. The normality of the solutions was approximately 0.015.

A 2 per cent solution of potassium iodide (*5*) was found most satisfactory; 0.01 *N* hydrochloric or sulfuric acid (*2*) gave optimum hydrogen-ion concentration for reactions

$$IO_3^- + 5I^- + 6H^+ \rightarrow 3I_2 + 3H_2O$$
$$2SO_3^= + I_2 \rightarrow S_4O_6^= + 2I^-$$

Results

Typical data obtained by this method are given in Table I.

TABLE I. DETERMINATION OF IODATE, USING 2 PER CENT IODIDE SOLUTIONS AND 0.01 *N* ACID

Sample No.	KIO_3 Found	KIO_3 Present	Percentage Error
	Gram	*Gram*	
1	0.0002866	0.0002853	+0.5
2	0.0003654	0.0003650	+0.1
3	0.0003144	0.0003143	+0.031
4	0.0003862	0.0003854	+0.2
5	0.0003474	0.0003488	−0.5
6	0.0003464	0.0003460	+0.1
7	0.0003393	0.0003393	0.0
8	0.0001954	0.0001947	+0.4
9	0.0003100	0.0003128	−0.9

This method has proved more accurate and more convenient than the starch indicator (*3*) method or the iodine-cyanide (*1*) procedure.

Literature Cited

(1) Kolthoff, I. M., *Mikrochemie*, 3, 75 (1925).
(2) Kolthoff and Furman, Volumetric Analysis, Vol. I, p. 232; Vol. II, p. 354, New York, John Wiley & Sons, 1929.
(3) Liebhafsky, H. A., *J. Am. Chem. Soc.*, 53, 165 (1931).
(4) Rice, F. O., and Kilpatrick, M., Jr., *Ibid.*, 44, 221 (1922).
(5) Washburn, E. W., *Ibid.*, 30, 40 (1908).

RECEIVED July 22, 1937.

CORRECTION. In the article on "Quantitative Determination of Arsenic in Small Amounts in Biological Materials" [IND. ENG. CHEM., Anal. Ed., **9**, 448 (1937)] the figure "6100" in line 4, paragraph 2, of "Development of Color" should have been "610."

HERBERT O. CALVERY

A New Method in Pycnometric Analysis

Preliminary Report

W. WALKER RUSSELL, Metcalf Laboratory, Brown University, Providence, R. I.

A simple and rapid method of pycnometric analysis is provided, in which a purified precipitate is quantitatively transferred to a very small pycnometer and weighed in the presence of a liquid of known density. Analyses involving such physically different precipitates as silver chloride, barium sulfate, and ferric hydroxide indicate that the method is capable of good accuracy.

THE determination of the density of solid substances by means of a pycnometer has long been recognized as a standard method and has been shown to be capable of considerable precision (*3*). Conversely, a pycnometric procedure has been used as a means of determining the weights of precipitates of known densities in a unique method of gravimetric analysis. Thus in 1877 Popper (*5*) transferred such precipitates as aluminum hydroxide, barium sulfate, ferric hydroxide, mercuric sulfide, nickel hydroxide, and lead sulfate to a pycnometer of some 30-cc. capacity, along with some of the supernatant liquid, and weighed them. Then having determined the densities of the supernatant liquids, he calculated the weights of the precipitates present using previously determined values for the precipitate densities.

Recently Oknin (*4*) used a similar method in which barium chromate was the precipitate investigated. A modified Popper method has been proposed by Chatelet (*1*) in which the precipitation is carried out in the pycnometer itself, thereby avoiding transfer of the precipitate. After weighing, a sufficient amount of the supernatant liquid is removed for a density determination. In this laboratory Gruntfest (*2*) found considerable difficulty in obtaining acceptable results by such methods as the aforementioned, and the procedures proved tedious and exacting.

The pycnometric method of gravimetric analysis, however, has a number of important advantages and if its disadvantages can be eliminated or sufficiently minimized, should take its proper place among quantitative methods of analysis. The pycnometric method eliminates the necessity of isolating the precipitate and thereby avoids some of the most tiresome and uncertain operations in gravimetric analysis. Transfer of the precipitate to the filtering medium becomes unnecessary. Washing of the precipitate has frequently been omitted. Any drying, heating, or ignition of the precipitate is entirely eliminated. This last advantage is probably the most important. In many gravimetric analyses the isolation of the precipitate in a final form which is highly pure, of perfectly definite composition, and capable of accurate weighing is exceedingly difficult. This is true largely because of the deleterious action of filter paper, dust, and organic matter in general during ignitions, because of the rather narrow high-temperature range in which many precipitate transformations are strictly quantitative, and because of the rather general hygroscopicity of ignited materials. Furthermore, the pycnometric method makes possible in principle the use of precipitates which, being otherwise suitable, fail because they cannot be isolated without indefinite change in composition. Some of the newer organic precipitants which possess such valuable properties as good specificity, low precipitate solubility, high equivalent weight, and the like, may well fall into this class. These advantages of the pycnometric method appear to make worth while an effort to reduce its complexity and associated errors.

Theory

If a vessel of accurately defined capacity, such as a pycnometer, is weighed when it contains a precipitate insoluble in the liquid which fills the vessel, we have the following expressions relating measurable properties of the system:

$$A = a + b + c \tag{1}$$
$$A = a + b + W - Dv \tag{2}$$
$$A = a + b + VD - Da/d \tag{3}$$
$$a = \frac{b + VD - A}{(D/d - 1)} \tag{4}$$

A = weight of pycnometer in grams plus precipitate plus liquid necessary to fill pycnometer
a = weight of precipitate
b = weight of dry, empty pycnometer
c = weight of liquid necessary to fill pycnometer when it also contains the precipitate
W = weight of liquid held by the pycnometer
D = density of liquid in grams per cc.
v = volume of precipitate
V = capacity of pycnometer in grams per cc.
d = density of precipitate

Units are grams and cubic centimeters.

With a given precipitate, using a given pycnometer and a liquid of known density, Equation 4 will contain only one experimental variable to be determined—namely, A

$$a = \frac{k_1 - A}{k_2} = k_3 - A/k_2 \tag{5}$$

where

$k_1 = b + VD$, and $k_2 = (D/d - 1)$, and $k_3 = k_1/k_2$

From Equation 3, it follows also that

$$d = \frac{Da}{a + b + VD - A} \tag{6}$$

With a given pycnometer and a liquid of known density Equation 6 becomes

$$d = \frac{Da}{a + k_1 - A} \tag{7}$$

Inspection of Equation 4 shows that the value of the numerator equals the difference between the weight of the precipitate and that weight of liquid which occupies the same volume as the precipitate. The magnitude of the numerator will, therefore, depend upon the relative values of the densities of the liquid and the precipitate. This must be equally true of the denominator, which approaches zero as the difference between the densities diminishes. The density of the precipitate must be appreciably greater than that of the liquid; otherwise the weight of the precipitate found experimentally constitutes the small difference between two much larger magnitudes, this difference, with its attendant errors, being greatly magnified by division by a very small fraction. Fortunately in gravimetric analyses carried out in aqueous solutions, the density of the liquid can be kept close to unity while the density of the precipitate varies with its nature between 2 and 10. Assuming unit density for the liquid, over this range of precipitate densities, therefore, the value of the denominator varies from -0.5 to -0.9; for unit volume of precipitate, the value of the numerator varies from -1 to -9.

Sources of Error in a Pycnometric Method of Analysis

In order to make a pycnometric method precise and accurate, it is necessary to recognize and effectively deal with its sources of error. As ordinarily carried out, pycnometer determinations suffer from those errors characteristic of methods which depend upon a small difference between much larger magnitudes. Furthermore, because of the relatively large thermal expansion coefficients of useful liquids, very exact thermostating is required for any considerable volume of liquid. Also the considerable surface of most pycnometers may be a source of error in weighings. Solubility of the precipitate in the liquid, and deviations of the densities of the precipitate and liquid from their calculated values, also are sources of error. Errors of large magnitude can arise from pycnometers of unsuitable design, especially those with defective closure which do not contain and maintain a constant volume of liquid during the weighings. Finally, there are mechanical losses if the precipitate is transferred.

For pycnometric gravimetric analysis, ideally the pycnometer should be just large enough to hold the precipitate plus a minimum of liquid. Because of the relatively large volumes of liquid required for successful gravimetric precipitations, it is obvious, therefore, that some means of quantitative transfer of the precipitate must be devised. If precipitates can be tightly packed, the volume occupied by 0.5 gram of solid will vary roughly between 0.3 and 0.1 cc. except for some very voluminous precipitates which may require up to 5 cc. A complete, charged pycnometer of 1- to 5-cc. capacity need not weigh over 10 to 15 grams and will possess about the same surface as an ordinary analytical crucible. Furthermore, the weight of the pycnometer when filled will vary by only 0.02 to 0.03 mg. per 0.1° C. per cc. of water near room temperatures. Regulation of the temperature bath, therefore, becomes extremely simple, especially as but a few minutes are required to reach temperature equilibrium. Unless the pycnometer stopper is flat and optically plane (*3*), this vessel is probably best equipped with a ground-in stopper provided with a central capillary exit. If, by means of a scratch or otherwise, the liquid level in the capillary can be read to 0.1 mm., the error in level adjustment will amount to 0.08 mg. with a 1-mm. capillary, or to 0.02 mg. with a capillary 0.5 mm. wide.

The densities of the precipitate and of the pycnometer liquid are seen to be involved in every calculation of precipitate weight. If the density of either varies from the value used in the calculations, errors must be introduced. From Equation 5 it is clear that k_1 is independent of changes in d, but not k_2. Using too large a value for d in calculations will lead to low results, and conversely. While the relative error thus introduced into the calculated results is independent of the weight of precipitate, it will be less with precipitates of greater density. Thus an error in knowing a precipitate density, when the latter is about 2, introduces the same relative error (with opposite sign) in the calculated result. However, when the precipitate density is 10 the error introduced is only about one-tenth that in the density, while for a precipitate of density 5, about one-fourth of the density error so appears.

From Equation 4 it is clear that the density of the pycnometer liquid enters in a somewhat more complicated manner. Positive errors in D will give low calculated precipitate weights, and conversely, because the numerator of Equation 4 is more sensitive to changes in D than is the denominator. Furthermore, the effect of an error in D will be the less, the smaller the amount of liquid held by the pycnometer, the larger the weight of precipitate involved, and the greater the density of the precipitate. Thus with 1 gram of precipitate of density 2 in a pycnometer of 1-cc. capacity, a 0.1 per cent positive error in D (which is usually near unity) produces a 0.1 per cent negative error in a. This error is increased to −0.5 per cent if a pycnometer of 3-cc. capacity is used. However, if with the larger pycnometer 2 grams of a precipitate of density 6 are employed, the error in a is reduced to −0.15 per cent.

From Equation 6 it is clear that if the value of the liquid density varies from the true value, the determined value of the density of the precipitate will be affected. Positive errors in D will produce negative errors in d, and conversely, because the numerator is less sensitive to changes in D than is the denominator of Equation 6. Also the effect of an error in D will be the less, the smaller the amount of liquid held by the pycnometer, the larger the weight of precipitate involved, and the smaller the density of the precipitate. Thus with 1 gram of precipitate of density 2 in a pycnometer of 1-cc. capacity, a 0.1 per cent positive error in D (which is usually near unity) produces a 0.1 per cent negative error in d. This error is increased to −1.1 per cent if a pycnometer of 2-cc. capacity and a precipitate of density 6 are involved. However, if at the same time the weight of the precipitate used is made 3 grams, the error in d is reduced to −0.3 per cent.

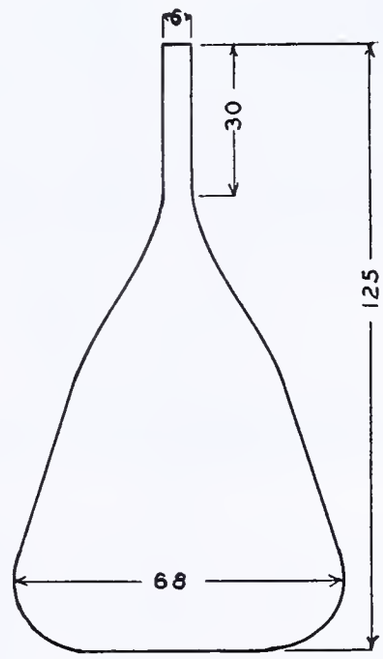

FIGURE 1. PRECIPITATION FLASK
(Dimensions in mm.)

No error is introduced into a pycnometric analysis if an arbitrary value is assumed for the density of the standardizing liquid—e. g., unit density for distilled water, provided that the density of the pycnometer liquid, the density of the precipitate, and the capacity of the pycnometer are all referred to this same standard liquid.

If the densities of the precipitates involved in pycnometric analyses are determined by the same experimental procedures to be used later in analyses, a considerable compensation of experimental errors may be achieved. Thus, if the value of a used in computing the density of a precipitate differs from the amount of precipitate actually present during the experimental determination of d, the value of d is incorrect as an absolute value, but if this incorrect value of d is then used in computing an analysis in which the amount of precipitate present differs in the same relative degree from the amount that theoretically should be present, no error is introduced into the pycnometric analysis. A complete compensation of errors of this type requires that the same fraction of a be always lost (or always gained) in the experimental manipulations. In practice this probably will be most nearly the case

when similar amounts of precipitates are involved, at least as regards precipitate losses in transfer and those due to solubility. It also follows from the above discussion that assuming an incorrect factor for converting a sample constituent to the precipitate form, or vice versa, introduces no error into a pycnometric analysis, provided of course that the same assumption is made in the experimental determination of precipitate density. This is a fact of considerable importance, as the exact composition of the precipitation form may be in doubt, especially as regards its degree of solvation.

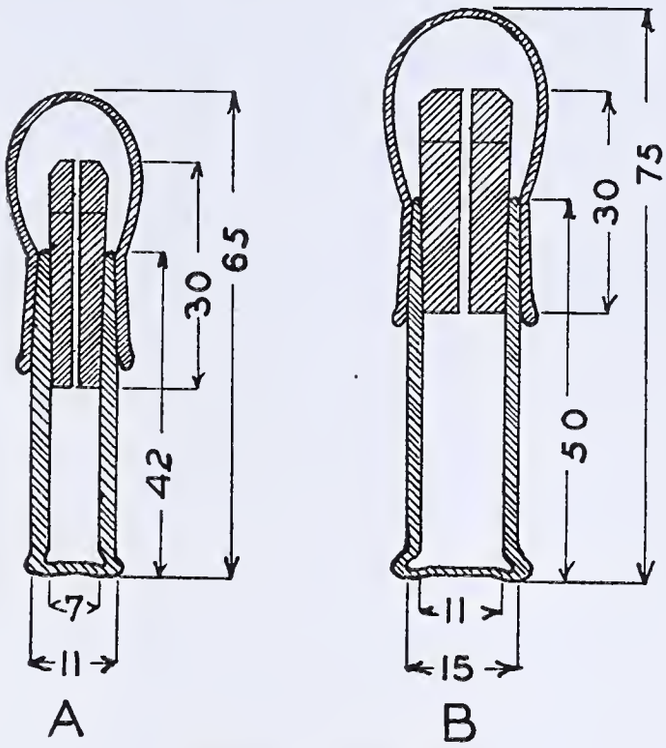

FIGURE 2. PYCNOMETERS
A. Small pycnometer, capacity about 1 cc.
B. Larger pycnometer, capacity about 3 cc.
(Dimensions in mm.)

The foregoing considerations form a basis for judging what accuracy should characterize the various factors which enter into a pycnometric analysis in order to obtain a given order of accuracy in the final result. In the present work, using an ordinary analytical balance and weighing to the nearest 0.1 or 0.05 mg., a maximum error of about 1 mg. has been found, as would be estimated. The much smaller errors frequently found probably can be attributed to the operation of some of the compensation effects previously discussed.

Apparatus

Precipitation is carried out in special flasks designed to facilitate the transfer of the precipitate to the very small pycnometer used. The precipitate transfer is aided by the use of a centrifuge which not only conveys the precipitate more rapidly and completely, but also packs the precipitate tightly into the pycnometer. To obtain sufficient weights of very voluminous precipitates, close packing is necessary.

A precipitation flask can be made by drawing down the neck of a 125-cc. Pyrex Erlenmeyer flask and sealing to the portion so constricted a narrow piece of thin-walled Pyrex tubing. Pains should be taken to draw down the flask uniformly, and to attach the neck tube without producing irregularities on the inner flask surface on which precipitate particles can lodge. For a like reason the end of the neck tube should be fire-polished with care not to constrict it at all.

In Figure 1 a precipitation flask so prepared is shown. This flask, which has a neck tube 30 mm. long, 1 mm. in wall thickness, and 6 mm. in outside diameter, is suitable for use with the small pycnometer shown in Figure 2*A*. With the larger pycnometer shown in Figure 2*B*, a precipitation flask with a neck tube 10 mm. in outside diameter can be used.

The size of the pycnometer will vary with the weight and bulkiness of the precipitate which it is desired to handle. In the present work pycnometers of about 1-cc. capacity mainly have been used. Such vessels will easily hold up to 1 gram of silver chloride or barium sulfate, or about 50 mg. of ferric hydroxide. The design of the pycnometer will be dictated also by the necessity of obtaining a highly accurate closure and by the type of centrifuge employed. In the present work an electrically driven centrifuge, Type SB, was used. (Centrifuge and cups are made by the International Equipment Company, Boston, Mass.)

Figure 2 shows two types of pycnometers drawn to scale. The pycnometer in *A* will fit into the lower chamber of centrifuge cup No. 395, while that in *B* requires a larger centrifuge cup—for example, No. 373. The pycnometers can be made from Pyrex tubing of about 2- to 3-mm. wall thickness, and as shown the smaller vessel has an outside diameter of 11 mm. while the larger is 15 mm. wide. The stoppers, which can be made from thick-walled capillary of 0.5- to 1-mm. bore, should be very carefully ground in, so that the pycnometer volume will be very accurately and reproducibly defined. A scratch encircles the capillary stopper in order to aid in defining the pycnometer volume. The pycnometer is completed by a cap with a ground-glass joint, which is necessary in order to prevent any slight evaporation of the enclosed liquid. The capacity of the pycnometer is determined at the temperature of use—e. g., 30° C.—which in any case should be above the highest balance room temperature that will be encountered. This precaution prevents the pycnometer from overflowing at any time through the capillary, which would cause a loss of liquid. The calibration liquid should be pure and preferably of accurately known density, conveniently pure water. The capacity of the pycnometer should be known to about 1 part in 10,000.

Figure 3 shows the small pycnometer of Figure 2*A*, attached to the precipitation flask of Figure 1 by means of a short piece of heavy-walled rubber tubing, the latter vessel being inverted to a position ready for centrifuging. The pycnometer rests on a small rubber disk, while the precipitation flask is supported in the centrifuge cup by rubber form No. 598 designed for use with the Goetz tube.

Figure 4 shows the larger pycnometer of Figure 2*B*, attached, in position for centrifuging, to a precipitation flask with a wider neck and a narrower base. This base is made just small enough to fit into centrifuge cup No. 373. By inserting the flask in an upright position into this cup and centrifuging, it becomes practical to wash by decantation, prior to transfer, those precipitates which normally settle very slowly. As shown in Figure 4, the precipitation flask is supported by the Goetz tube rubber form, which in turn is held by a cupped wooden form bored to hold the pycnometer. This wooden form should be well paraffined. A rubber form molded to the dimensions of centrifuge cup No. 373 and all in one piece is to be preferred.

Washing Media

The present method employs relatively large amounts of washing media of carefully determined density. It is convenient, therefore, to prepare several gallons of a given washing medium at one time, and to determine its density carefully, using a standard pycnometer of some 25- to 100-cc. capacity. A precision of at least 1 part in 10,000 is thus attainable. In the present work the following washing media were required: for barium sulfate, 0.03 *N* sulfuric acid plus 10 cc. of ethyl alcohol per liter, with a density at 30° C., of 0.99518; for silver chloride, 0.01 *N* nitric acid, with a density at 30° C., of 0.99601; for ferric hydroxide, ammonium nitrate solution, 10 grams per liter, with a density at 30° C., of 0.99932.

The Method

The precipitation is carried out in a precipitation flask similar to that shown in Figure 1. The introduction of the sample, solvent, reagent, etc., is accomplished by the use of a thistle tube whose exit end will just pass through the neck of the precipitation flask. It is usually convenient to dilute the solution to some 75

cc. and then to add the precipitating agent in a volume of about 25 cc. During precipitation the flask contents are readily agitated by shaking. When precipitation is complete, the precipitate is allowed to settle and to digest if desirable.

The washing of precipitates is carried out by decantation, using a siphon which will pass through the neck of the precipitation flask. The intake end of the siphon has its opening on the side, 1 to 2 mm. from a closed end. By placing the flask in an inclined position during the settling of the precipitate, the precipitate is kept to one side, so that even though the siphon end rests upon the bottom of the flask it contacts no precipitate. If any precipitate particles float upon the surface of the liquid, it is wise to stop the siphon just before it empties, thereby avoiding any chance of loss of traces of precipitate. The washing medium should not only be one in which the precipitate is highly insoluble, but also one which keeps the precipitate well coagulated and in a form which settles quickly.

When the precipitate has been washed sufficiently and the original supernatant liquid has been completely replaced by the standard washing medium, the volume of the latter is increased to about 100 cc. in the precipitation flask. Should any bits of precipitate cling to the inner side walls of this flask, they are easily displaced by a bit of rubber threaded onto a thin, stiff, curved wire which is inserted through the flask neck and used as a policeman. Now the pycnometer and the rubber connecting tubing are rinsed with the standard washing medium. Holding the pycnometer firmly, the rubber tubing is forced just over the edge of the ground-glass portion. By completely filling with the standard washing solution and pinching shut the end of the rubber, the latter is readily forced down into place.

The precipitation flask is now carefully inclined until its liquid almost emerges, and the liquid-filled pycnometer is slipped on far enough so that when the whole is centrifuged, the two vessels will separate slightly. When inverted, the precipitate falls into the pycnometer which has remained completely filled with liquid. By giving a rotary motion to the inverted precipitation flask, the transfer of precipitate is aided. Particles of silver chloride must be broken up by shaking, either during or after precipitation, if they are to pass readily through the neck of the flask used with the small pycnometer (Figure 2*A*). A rubber cap about 3 to 4 mm. thick is put under the bottom of the pycnometer before it is placed in the centrifuge cup. The cup is filled with water during centrifuging, as this prevents any tendency of the liquid within the glass vessels to escape. Now two cups are centrifuged for from 1 to 3 minutes at from 1200 to 2000 r. p. m., then removed and inspected. If any traces of precipitate cling to the inner walls of the flask, they are displaced by shaking. The packed precipitate shows little tendency to be disturbed, even though the flask liquid is violently shaken. After again centrifuging, the precipitate transfer is generally complete.

Holding the pycnometer in an upright position the flask neck is carefully withdrawn, and the rubber connection eased off. The ground pycnometer stopper is first wet with some standard washing solution and then carefully though firmly inserted in place. The pycnometer is immediately immersed up to the ground joint in a liquid bath—e. g., in a Dewar vessel of water—which is maintained at the calibration temperature to within a tenth of a degree. After about 10 minutes the liquid level in the capillary is adjusted to the scratch with tightly twisted wisps of filter paper. After withdrawing from the bath the pycnometer is carefully wiped—e. g., with filter paper—giving special attention to the ground joint. If this joint is defective in construction, the liquid level in the capillary may fall when the water is removed around the joint during the wiping. The dry cap is now put on and the pycnometer allowed to stand for 10 minutes in the balance case before weighing. During the next 10 minutes its weight will usually change less than 0.1 mg. A pycnometer is easily moved about by tightly grasping the protruding ends of a strip of tough paper which is bent around the vessel near its base.

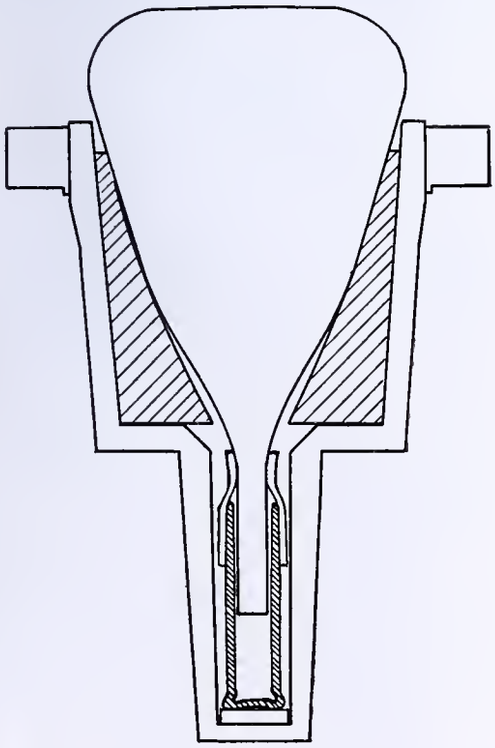

Figure 3. Centrifuge Cup Assembly

Small pycnometer of Figure 2-*A*, attached to inverted precipitation flask and mounted in centrifuge cup ready for centrifuging

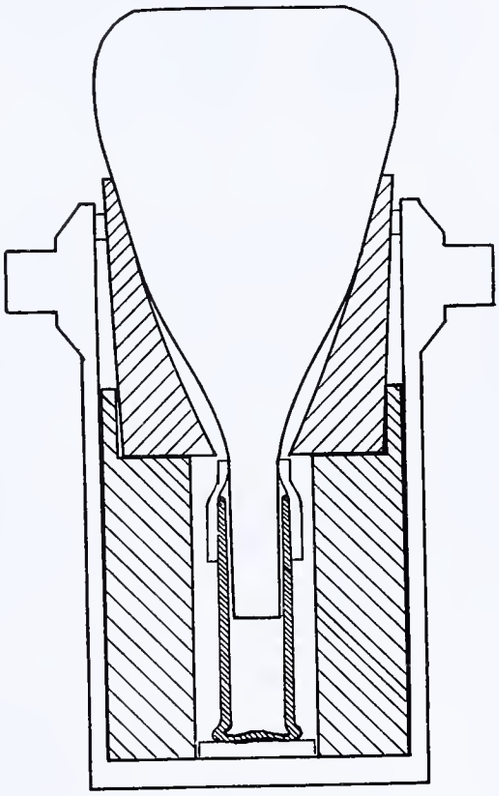

Figure 4. Centrifuge Cup Assembly

Larger pycnometer of Figure 2-*B*, attached to inverted precipitation flask and mounted in centrifuge cup ready for centrifuging

Calculations

Equation 5 can be used to calculate the results of analyses. For a given precipitate, washing medium, and pycnometer, the values of k_1 and k_2 need be evaluated but once. The value of k_1 involves the weight of the empty pycnometer in grams, the volume of the pycnometer in cubic centimeters, and the density of the standard washing medium in grams per cc. The value of k_2 involves again the value of D and also the density of the precipitate. This latter value may be obtained by the analysis of known substances by the pycnometric method already outlined and the use of Equation 7. If any considerable change is made in a pycnometric method of analysis, its possible effect upon the value of d should be ascertained. Having determined the values of the constants in Equation 5, the computation of results becomes as easy as in ordinary simple gravimetric analysis.

TABLE I. PRECIPITATE DENSITIES

Precipitate	Original Material	Sample Weight	Density at 30°	Density, Mean Value
		Gram	*G./cc.*	
AgCl	NaCl	0.2555	5.460	...
		0.2023	5.465	...
		0.2052	5.462	5.463
$Fe(OH)_3$	Fe	0.0222	2.644	...
		0.02045	2.636	...
		0.02145	2.652	2.644
$BaSO_4$	$BaCO_3$	0.5033	4.441	...
		0.5071	4.431	...
		0.5012	4.446	...
		0.4900	4.414	...
		0.4967	4.409	...
		0.2465	4.407	...
	$Ba(NO_3)_2$	0.3076	4.390	...
	$BaCl_2 \cdot 2H_2O$	0.6006	4.441	...
		0.2948	4.385	4.418

TABLE II. RESULTS OF PYCNOMETRIC ANALYSES

Sample	Precipitate	Weight of Precipitate Present	Weight of Precipitate Found	Relative Error
		Gram	*Gram*	%
NaCl	AgCl	0.6264	0.6263	−0.01
		0.4960	0.4960	0.00
		0.5031	0.5031	0.00
Fe	$Fe(OH)_3$	0.0424	0.0424	0.00
		0.0391	0.03905	−0.20
		0.04105	0.0411	+0.20
$BaCO_3$	$BaSO_4$	0.5953	0.5962	+0.15
		0.5998	0.6003	+0.09
		0.5928	0.5939	+0.18
		0.5795	0.5794	−0.02
		0.5874	0.5871	−0.06
		0.2915	0.2913	−0.07
	$Ba(NO_3)_2$	0.2747	0.2742	−0.19
	$BaCl_2 \cdot 2H_2O$	0.5739	0.5747	+0.15
		0.2816	0.2810	−0.22

Methods for Specific Analyses

ANALYSIS FOR BARIUM AS SULFATE. The weighed sample is dissolved, using as little hydrochloric acid as possible and so as to have 1 cc. of concentrated hydrochloric acid present. The sample solution is transferred to the precipitation flask and diluted to 75 cc. Enough 0.25 *N* sulfuric acid is measured out to precipitate the barium completely and give a 5 per cent excess. This volume of acid, diluted to about 25 cc., is slowly added through the thistle tube to the nearly boiling solution which is agitated well by shaking the precipitation flask. The precipitate settles readily and is allowed to stand for an hour or longer if desired. The clear liquid is siphoned off and 25 cc. of the sulfuric acid–alcohol washing medium are added; then the precipitate is shaken well. Owing to the presence of the alcohol, the precipitate settles rapidly. After five like portions of the washing solution have been employed, there is but a slight test for chloride. Now 100 cc. of washing solution are added and the remainder of the analysis is performed as indicated above.

ANALYSIS FOR CHLORIDE AS SILVER CHLORIDE. The weighed sample is dissolved, using as little nitric acid as possible and so as to have 1 cc. of concentrated nitric acid present. After transferring to the precipitation flask, the sample solution is diluted to about 75 cc. and enough 0.5 *N* silver nitrate solution (diluted to 25 cc.) is slowly added to precipitate the chloride completely and allow about a 5 per cent excess. During precipitation the flask contents are well shaken. When precipitation is complete, the mixture is heated to boiling and then allowed to stand for an hour or longer if desired. During the washing, which requires about five 25-cc. portions of the 0.01 *N* nitric acid, care is taken to shake the precipitate hard enough to break up any particles large enough to clog the neck of the precipitation flask during centrifuging. The analysis is completed as outlined above.

ANALYSIS FOR IRON AS FERRIC HYDROXIDE. The weighed sample (not over 25 mg. of iron) is dissolved and the iron is oxidized to the ferric state with nitric acid, hydrogen peroxide, or bromine, then transferred to the precipitation flask. Enough nitric acid is added to have about 1 to 2 cc. of the concentrated acid present and the sample is diluted to about 75 cc. About 3 cc. of filtered concentrated ammonium hydroxide are diluted to 20 cc. and slowly added to the nearly boiling solution, which is constantly shaken, until a slight excess of ammonia is present. The mixture is heated to boiling for 1 minute. After standing a half hour or longer if desired, the precipitate may be washed, using the prepared ammonium nitrate solution. Because of the bulky nature of the precipitate, it is particularly desirable here to settle the precipitate while the flask is inclined. Because some bits of precipitate tend to float on the liquid surface, the siphon is best stopped just before it empties itself. By heating the mixture just to boiling after the addition of each 50 cc. of washing medium, the ferric hydroxide settles rapidly. About 4 portions of washing solution are used.

Results

In Table I are shown the densities of the three precipitates studied, calculated from the pycnometric analyses of several simple substances of good purity by means of Equation 7. By the usual gravimetric procedures it was ascertained that the barium carbonate used contained 69.15 per cent of barium; the $BaCl_2 \cdot 2H_2O$ contained 56.13 per cent of barium; the barium nitrate contained 52.30 per cent of barium; the iron wire contained 99.85 per cent of iron; and the sodium chloride contained 60.63 per cent of chloride. From these results the amount of precipitate present was calculated, using the simplest formula for the precipitate. In the case of ferric hydroxide this precipitate is undoubtedly hydrated. As has already been pointed out, assuming a simpler formula for the calculation of the precipitate density to be used in pycnometric analysis introduces no error, provided the same assumption is made there and the precipitate composition remains constant. The average density values in Table I differ somewhat from those recorded in the literature, and should be regarded primarily as apparent densities more or less characteristic of the method by which they were obtained.

Table II shows the results of the pycnometric analyses of the substances used in the density determinations of Table I, these substances now being treated as unknowns. The calculations are made with Equation 5, using the average values of the densities given in Table I. In Table II the weights of "precipitate present" are calculated by assuming the simplest formula for the precipitate, and correcting, on the basis of ordinary gravimetric analyses, for the purity of the substances analyzed. The chloride and iron analyses in particular indicate that the foregoing method is capable of considerable accuracy. The barium analyses are less accurate on the basis of absolute error, yet their average relative error is but slightly greater than 0.1 per cent, and there is reason to believe that further study of this analysis will lead to improved accuracy.

Discussion

By transferring a gravimetric precipitate to a very small pycnometer, it becomes possible to eliminate sources of considerable error in a pycnometric method of analysis. By using a standard washing medium of known density, it is possible to remove impurities from the precipitate, to eliminate repeating the density determination in each analysis, and greatly to simplify the calculation of results. Furthermore, in ordinary gravimetric analysis the constituents of the washing solution must be completely volatile, whereas in the present method no such limitation is imposed. Since such time-consuming operations as preparing crucibles and bringing them to constant weight, transferring the precipitate to a filter, and drying or igniting to constant weight are eliminated, the pycnometric method is faster than the gravimetric method and may even prove more certain and reliable in some cases.

The only time-consuming operation left is the washing of the precipitate, which also displaces a liquid of unknown density with one of known density. However, experiments are under way to see if this operation cannot be much shortened and still maintain the above-mentioned simplifications inherent in the use of a known constant-density pycnometer liquid. If so, the pycnometric method should compete with certain volumetric methods in rapidity. Although the centrifuge has been used in the analyses here reported, there is

evidence that it may be unnecessary with heavier and denser precipitates, and this possibility is being investigated.

Any pycnometric method is obviously dependent upon accurate knowledge of precipitate density. The values of precipitate density here reported differ in some degree from those reported elsewhere. It is proposed, therefore, to study the factors which particularly affect precipitate density, in order to ascertain in which parts of a pycnometric analysis particular care is needed. Such a study should also throw light upon certain fundamental characteristics of gravimetric precipitates.

The precision and accuracy obtained in the analyses here reported indicate that the present method of pycnometric analysis should compare favorably with good macrogravimetric procedures. In cases in which a precipitate acts badly during drying or ignition, the pycnometric method may offer considerable advantages. It is proposed to extend this study to other conditions, including especially the effects of foreign ions, and to other precipitates, including organic compounds, in order to evaluate better the possibilities of this method of analysis.

Literature Cited

(1) Chatelet, L., *Chimie & Industrie*, Special No. 199 (April, 1934).
(2) Gruntfest, I. J., unpublished results, Brown University, 1937.
(3) Johnston, J., and Adams, L. H., *J. Am. Chem. Soc.*, **34**, 566–84 (1912).
(4) Oknin, I. V., *Zavodskaya Lab.*, **4**, 420–1 (1935).
(5) Popper, R., *Z. anal. Chem.*, **16**, 157–71 (1877); **18**, 14–38 (1879).

Received October 25, 1937.

Microgasometric Analysis with the Dilatometer

Determination of the Carbonate Radical

BEVERLY L. CLARKE AND H. W. HERMANCE, Bell Telephone Laboratories, New York, N. Y.

GASOMETRIC methods are particularly desirable in microanalysis because of the relatively large volume of the measured product, compared to the mass of the sample. Several procedures are available. The gas may be evolved against the pressure of a column of mercury and its volume determined from the measured increase in pressure. Such a manometric method requires that the free space in the apparatus be precisely known. To ensure accuracy of reading, the measured pressure difference must be reasonably great and the reaction must therefore be such as to proceed to completion at pressures above atmospheric. In addition to the difficulties imposed by such conditions, it is obvious that there is danger of leakage through rubber or ground-glass connections from a system under pressure. Further, the solubility of the gas in any liquid present increases with pressure.

Another procedure is to evolve the gas under constant pressure and measure the increase in volume. This is most commonly done by displacing a suitable liquid from a calibrated tube. The necessary apparatus is rather cumbersome for microchemical purposes. When the volume of gas is small, errors due to its solubility in the displaced liquid are likely to be serious.

Nernst (*2*) used the mercury bead dilatometer to measure small volume increases in vapor density determinations by the Victor Meyer method. The dilatometer consists of a graduated horizontal tube of small bore, closed by a droplet of mercury which is free to move until the internal and external pressures are equalized. This movement, over the graduated scale, indicates the sense and the magnitude of the volume change. Applied to micromethods, such an arrangement possesses particular merit. Its construction is simple, permitting a reduction of the apparatus capacity to a point commensurate with the small volumes dealt with. Errors attendant upon measurement of the evolved gas by liquid displacement are not present in the dilatometer method.

The authors have applied such a dilatometer to the determination of carbon dioxide in samples of corrosion product weighing only a few milligrams. Because of the high solubility of carbon dioxide in most liquids, low results were obtained when acids, either dilute or concentrated, were used to liberate the gas, even when the volume of acid did not exceed 0.2 cc. Release of dissolved carbon dioxide by boiling the acid introduced complications in the construction of the apparatus and was not completely effective in the closed system because of the re-solution of the carbon dioxide by the condensed film on the walls. A method was therefore devised in which the carbon dioxide is liberated by a fused acid salt, potassium pyrosulfate, in which its solubility is negligible. The need for condensation chambers, moisture traps, and special arrangements for introducing the sample is thus eliminated. A simply constructed microretort for carrying out the fusion and the dilatometer constitute the assembly.

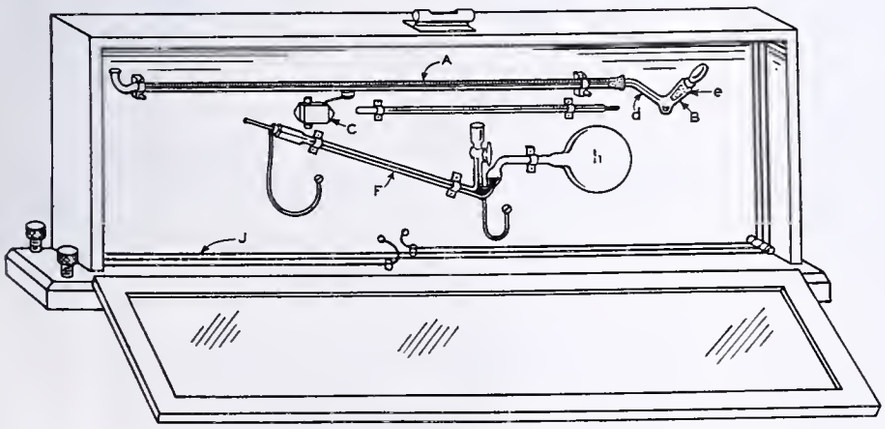

Figure 1. Dilatometer

Apparatus

The apparatus shown in Figure 1 has two essential parts, the gas measuring buret, *A*, and the retort, *B*. The buret is constructed of thermometer tubing having a bore of approximately 2 mm. and a capacity of 2 cc., graduated in 0.01-cc. divisions. By means of a reading lens, tenths of a division may be estimated. A funnel-shaped opening at the outer end facilitates cleaning, and also serves to receive the mercury droplet when the gas volume accidentally exceeds the capacity of the buret. An interchangeable (No. 5) ground joint connects the retort with the dilatometer. The droplet of mercury used in the buret should not be too large. Its length should be about two and one-half times the bore of the tube. A tapper, *C*, made from an electric bell, helps to overcome the resistance opposing the movement of the mercury.

The retort unit, constructed of quartz glass, consists of a heavy-walled, conical bulb of about

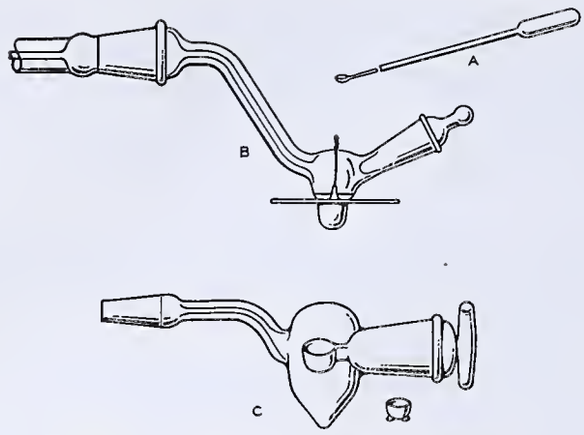

FIGURE 2. DETAILS OF RETORT ASSEMBLY

1-cc. capacity joined to which are two tubes: *e*, for the introduction of the sample, and *d*, communicating with the dilatometer. These tubes make an angle of about 45° with the axis of the retort bulb. Tube *d* has a capillary bore, 1 to 1.5 mm. in diameter, and is about 10 cm. long. Close to the retort, two or three small dilations in the tube bore serve to entrap any sulfur trioxide that may be accidentally given off or any pyrosulfate that may be spattered. The narrow bore of the tube reduces the dead space in the apparatus and its length decreases the heat transmission to the buret. The tube terminates in the male member of the ground joint connecting the retort unit with the dilatometer. Tube *e* is approximately 4 cm. long and has a bore of about 5 mm. It is provided with a ground-in stopper terminating in a solid process which extends downward and substantially fills the space within the tube, thus reducing unnecessary volume. A mica disk, about 4 cm. in diameter, perforated at the center, fits over the retort bulb (*B*, Figure 2) and protects tubes *d* and *e* from excessive heating. It is held in place by wires, looped over the tubes as shown.

The apparatus is mounted on a wooden panel which forms the back of a box, as shown in Figure 1. The box, the front panel of which is a detachable glass window, constitutes an air thermostat. The heater is a Nichrome wire, *J*, strung around the interior of the box as indicated. The thermoregulator, *F*, employs a glass vessel, *h*, blown with extremely thin walls, containing air as the expansion fluid. This type of regulator was found most satisfactory for the purpose.

Reagent

POTASSIUM PYROSULFATE. In a porcelain evaporating dish, heat gently 50 grams of C. P. potassium pyrosulfate until it no longer effervesces. Then slowly raise the temperature until sulfur trioxide fumes just commence to be evolved. Discontinue the heating, and pour the molten pyrosulfate out onto a porcelain plate, previously heated in an oven. Break up the solidified cake immediately and grind to about 10-mesh in a porcelain mortar. Preserve in a tightly stoppered bottle.

Procedure

Adjust the thermoregulator to maintain the temperature, in the closed box, 2° or 3° above that of the room.

Thoroughly clean the retort unit with hot chromic-sulfuric acid mixture, rinse with water and acetone, and dry in an oven. Introduce sufficient pyrosulfate reagent to fill about three-fourths of the retort bulb, and heat gently until it has melted and the air bubbles have been completely expelled. After cooling, attach this part of the apparatus to the microburet, taking care that the ground joint is lubricated with a minimum quantity of a heavy-bodied grease. With the cap removed from the sample introduction tube, gently force the mercury bead to the initial point on the buret scale, this operation being best accomplished by attaching a rubber tube to the open end of the buret and carefully blowing into it. Replace the cap, also lubricated, on the sample tube; replace the front panel of the box and allow the apparatus to stand undisturbed for 5 minutes to bring about temperature equilibrium. Finally, bring the mercury bead to its position of rest by means of the tapper and take the initial reading on the scale as well as the temperature of the box.

Before the actual determination, make a trial of the apparatus as a check on the tightness of the joints, the absence of volatile impurities in the pyrosulfate, and the ability of the operator to carry out the fusion without softening the wall of the retort. Gently heat the retort bulb until the pyrosulfate again fuses, taking care in this operation not to concentrate the flame at one spot on the glass, but rather to use an even rotary motion, heating the upper part of the bulb as well as the lower. The temperature should not reach a point beyond that at which a faint red glow may just be detected in a darkened room. Failure to observe these precautions may result in the softening of the bulb with alteration of its shape and a change in the volume of the apparatus. Maintain the pyrosulfate in a fused condition for 5 minutes, then close the box and allow the apparatus to cool to the temperature of the thermostat. Now take readings of the position of the mercury bead at 1-minute intervals until three successive readings agree. If the details of the procedure have been carefully followed out and the apparatus was correctly constructed, the change in the volume of the gas in the apparatus should not exceed 0.005 cc.

When it has been established that the apparatus is working properly, weigh from 5 to 50 mg. of the finely ground sample, depending on the amount of carbon dioxide expected, and introduce into the retort bulb. This operation is most conveniently carried out by means of a small metal spoon with a detachable handle long enough to permit its introduction into the retort (*A*, Figure 2). Weigh the spoon, together with a small capsule containing the previously dried and finely ground sample, attach the handle and scoop up a portion of the sample, the excess material clinging to the bottom and edges of the spoon being jarred off by tapping against the edge of the capsule. Then transfer contents of the spoon to the surface of the pyrosulfate in the retort by rotating the handle. Detach the spoon, return to the balance pan, and obtain the sample taken as the loss in weight.

Adjust the mercury bead to the initial position in the buret and place the cap tightly on the sample introduction tube. Make three readings of the position of the bead at 1-minute intervals, using the vibrator each time. If there is no change, commence the heating of the retort, slowly bringing the pyrosulfate to a completely fused condition and maintaining it thus until there is no further evolution of gas and all the bubbles have escaped. (Often the heat of the hands in manipulating the apparatus preparatory to making the determination will raise the temperature of the air within by 3° or 4°. Hence it is not safe to start immediately without observing the precaution mentioned.) If particles of sample remain clinging to the upper wall of the retort chamber and have not come into contact with the pyrosulfate, this can usually be remedied by gently shaking the apparatus.

Replace the front panel and allow the apparatus to return to the temperature of the thermostat. Read the position of the bead at 1-minute intervals until 3 consecutive readings agree.

Calculation

The volume of carbon dioxide evolved is given by the difference in the positions of the bead.

1 mg. of CO_2 at 0° C. and 760 mm. = 0.509 cc.

$$\text{Hence, weight of } CO_2 = \frac{(V_1 - V_2)}{0.509} \times \frac{760}{P} \times \frac{t + 273}{273}$$

where $V_1 - V_2$ is the observed volume increase; P, the barometric pressure in mm.; and t, the temperature of the thermostat in ° C.

TABLE I. DETERMINATION OF CARBON DIOXIDE IN CERUSSITE

Sample Taken	Equivalent Volume of CO_2 at 25° C.	Buret Reading Initial	Buret Reading Final	Volume of CO_2 at 25° C. Found	Error
Mg.	*Cc.*	*Cc.*	*Cc.*	*Cc.*	*Cc.*
[a]	...	0.075	0.072	...	−0.003
[a]	...	0.010	0.010	...	0.000
[a]	...	0.0130	0.0135	...	+0.0005
[a]	...	0.090	0.091	...	+0.001
5.70	0.516	0.150	0.661	0.511	−0.005
6.85	0.622	0.048	0.668	0.620	−0.002
5.20	0.472	0.014	0.491	0.477	+0.005
25.15	2.275	0.172	2.450	2.278	+0.003
12.23	1.118	0.260	1.370	1.110	−0.008

[a] Control experiments.

Obviously the method has applications to many other determinations. *C*, Figure 2, shows a retort assembly designed for liquid reagents. The small cup at the right is a weighing vessel. Booth and Jones (*1*) list sixteen determinations to be done gasometrically, stating that their list is incomplete.

Literature Cited

(1) Booth and Jones, IND ENG. CHEM., Anal. Ed., 2, 237 (1930).
(2) Nernst, *Z. Elektrochem.*, 9, 622 (1903).

RECEIVED July 19, 1937. Presented before the Microchemical Section at the 92nd Meeting of the American Chemical Society, Pittsburgh, Pa., September 7 to 11, 1936.

AUTHOR INDEX

INDUSTRIAL AND ENGINEERING CHEMISTRY

ANALYTICAL EDITION

VOLUME 9—1937

ACREE, S. F. *See* Hughes, E. E.
ADLER, SOL. *See* Hayman, D. F.
ALBERTONI, G. J. Impact Machine for Rubber Testing. Determining Stress-Strain Diagram at High Speed 30
ALICINO, J. A. *See* Hamill, W. H.
ANDERSON, C. W. Determination of Small Quantities of Arsenic in White Metals 569
ANHORN, V. J., AND HUNT, H. Improved Method for Determination of Iodates 591
ARADINE, P. W. *See* Line, W. R.
ARNOW, L. E. *See* Bernhart, F. W.
AXTMAYER, J. H. *See* Cook, D. H.

BAILEY, A. J. Determination of Moisture in Wood Chips, Sawdust, and Pulp 568
Inexpensive Microchemical Filter Crucible 490
BAKER, C. P., AND KOMICH, A. J. Piezometer Ring 533
BAKER, R. H., AND BARKENBUS, CHARLES. Detection of Elements in Organic Compounds 135
BALDESCHWIELER, E. L., MORGAN, M. D., AND TROELLER, W. J. Kauri Butanol Test for Solvent Power. II 540
See also Lewis, J. B.
BARKENBUS, CHARLES. *See* Baker, R. H.
BARNETT, C. E. *See* Gamble, D. L.
BAYOR, E. H., AND KAMPF, L. Preparation of Vehicle Films Free of Supporting Foundation 49
BEAMISH, F. E., RUSSELL, J. J., AND SEATH, J. Determination of Gold 174
AND SCOTT, M. Analysis of Platinum Metals–Silver Assay Bead. 460
See also Forbes, E. C., Russell, J. J., Seath, J., *and* Thompson, S. O.
BEAVER, D. J. *See* Booth, E. W.
BENEDETTI-PICHLER, A. A. Microchemical Analysis of Pigments Used in Fossae of Incisions of Chinese Oracle Bones 149
Qualitative Analysis of Microgram Samples. General Technic 483
AND RACHELE, J. R. Qualitative Separations on Micro Scale. III. Analysis of Selenium Group of Noyes and Bray 589
BERGSTROM, F. W. Modification of Berl-Kullmann Melting Point Block. Electrically Heated Glass Melting Point Apparatus 340
BERNHART, F. W., ARNOW, L. E., AND BRATTON, A. C. Rapid Method for Protein Dialysis 387
BERRY, N. E. *See* Shuman, A. C.
BHARGAVA, P. N. *See* Giri, K. V.
BINNINGTON, D. S. Improved Reaction Microapparatus 353
BLACET, F. E., AND VOLMAN, D. H. Microanalysis of Gases. IV. Nitrous Oxide and Methane 44
BLOCK, W. D. *See* Christman, A. A.
BONNEY, D. T., WITH HUFF, W. J. Absorption of Hydrogen in Liquid Reagents. New Solution for Analytical Determination of Hydrogen in Gas Mixtures 157
BOOTH, E. W., AND BEAVER, D. J. Air-Bomb Aging Test for Tread Compounds 18
BOWLES, J. A. C., AND PARTRINGE, H. M. Rare Earth Salts. Precipitation and pH Studies with Glass Electrode 124
BRASS, P. D. *See* Jordan, H. F.
BRATTON, A. C. *See* Bernhart, F. W.
BRENNAN, J. J., MITCHELL, D. F., TIERNEY, F. P., AND THOMPSON, W. C. Fusibility of Coal Ash 106
BRENNER, M. W., AND POLAND, G. L. Laboratory Gas-Washing or Absorption Unit 480
BREUER, FRITZ. Modified Micro-Dumas Nitrogen Determination with Readily Available, Air-Free Carbon Dioxide 354
Operation of Analytical Microbalances Highly Sensitive to Temperature Changes 354
Simple and Inexpensive Electric Heating Apparatus 363
BRICE, B. A. *See* Keane, J. C.
BRINGES, R. W. *See* Churchill, H. V.
BRIGGS, L. H. Apparatus for Extraction of Liquids with Immiscible Solvents of Greater Density 250
Modified Mercury Seal for Stirrers 168
BRIGHT, H. A. Arsenious Oxide in Standardization of Solutions of Potassium Permanganate 577
BRIGHT, W. M., AND MILLER, E. L. Improved Salt Bridge for Electrometric Measurements 346
BROWN, D. J. *See* Schomaker, Verner.
BROWN, E. H., MORGAN, H. H., AND RUSHTON, E. R. Analysis of Crude Phosphorus and Sludges Containing Phosphorus 524
BRUINS, P. F. Production of Uniform Test Films of Shellac and Other Finishes 376
BRUUN, J. H., AND FAULCONER, W. B. M. Hundred-Plate Semiautomatic Laboratory Bubble-Cap Still of Glass 192
AND WEST, S. D. Twenty-Plate Laboratory Bubble-Cap Still for Low-Boiling Materials 247
BULLIS, D. E. Colorimetric Method for Soft Resins of Hops 267
BURTON, MILTON. Sloping Manometer 335
AND DAVIS, T. W. Simple Autobubbler Pipet 139
BYRNE, JOHN, SAYWELL, L. G., AND CRUESS, W. V. Iron Content of Grapes and Wine 83

CALDERWOOD, H. N., AND PIECHOWSKI, R. J. Modified Distillation Method for Moisture 520
CALDWELL, W. E., AND MCLEON, K. N. Determination of Gold and Silver by Recovery of Minute Amounts from Solution 530
CALEY, E. R. *See* Elving, P. J.
CALFEE, R. K., AND MCHARGUE, J. S. Optical Spectroscopic Determination of Boron 288
CALLENDAR, L. H. Determination of Silicon in Aluminum and Aluminum Alloys (Correspondence) 533
CALVERY, H. O. *See* Morris, H. J.
CAMERON, A. E. Sensitive Glass Electrode of Durable Form 436
CAMPS-CAMPINS, F. *See* Valdez, R.
CARLTON, ROBERT. *See* Christensen, B. E.
CARMONY, W. *See* Sheehan, W.
CARNAHAN, F. L. *See* Rescorla, A. R.
CARRUTH, W. L. *See* Stewart, O. J.
CASSINY, H. G. Simple Fume Absorber for Kjeldahl Digestions 478
CHAMBERS, ROBERT, KOPAC, M. J., AND GRAND, C. G. Living Cell. Physical Properties and Microchemical Reactions 143
CHANDLEE, G. C. *See* Geist, H. H.
CHANDLER, T. W. Siphon-Starting Device 249
CHOLAK, JACOB. Spectrographic Analysis of Biological Material. II. Bismuth 26
HUBBARD, D. M., MCNARY, R. R., AND STORY, R. V. Determination of Lead in Biological Materials. Comparison of Spectrographic, Dithizone, and *s*-Diphenylcarbazide Methods 488
CHRIST, C. L. *See* Thornton, W. M., JR.
CHRISTENSEN, B. E., AND CARLTON, ROBERT. Modified Capillary Combustion Unit for Gas Analysis Apparatus 400
CHRISTENSEN, L. M. *See* McPherson, W. K.
CHRISTMAN, A. A., BLOCK, W. D., AND SCHULTZ, JULIUS. Determination of Carbon Monoxide in Air 153
CHURCHILL, H. V., BRINGES, R. W., AND LEE, M. F. Determination of Silicon in Aluminum and Aluminum Alloys. (Correspondence, 534) 201
BRIDGES, R. W., AND ROWLEY, R. J. Interference of Phosphorus in Determination of Fluorine 222
See also Rowley, R. J.
CLARK, E. P. Determination of Acetyl, Especially in O-Acetyl Compounds 539
CLARK, G. L., AND GRING, J. L. Carotenoids in Yellow Corn. Quantitative Estimation from Modified Absorption Spectra Measurements of Carotenoids in Yellow Corn of Different Varieties and Qualities 271
See also Mrgudich, J. N.
CLARK, W. M. Kjeldahl Digestion Apparatus 338
CLARKE, B. L., AND HERMANCE, H. W. Microgasometric Analysis with Dilatometer. Determination of Carbonate Radical 597
Paper as Medium for Analytical Reactions. I. Improvements in Spot Test Technic 292
WOOTEN, L. A., AND STRUTHERS, J. D. Separation and Determination of Impurities in Lead. I. Tin 349
CLINE, D. C. *See* Sheen, R. T.
COHEN, W. E., AND HARRIS, E. E. Pretreatment of Wood with Hot Dilute Acid. Effect on Lignin Values 234
COLEMAN, W. C., AND MCCROSKY, C. R. Volumetric Determination of Selenium. Critical Study of Norris and Fay Method 431
COLMAN, I. S. *See* Tartar, H. V.
CONDIT, D. H. *See* Fratis, J. E.
CONE, R. M., AND DAVIS, L. H. Determination of Moisture Content of Tobacco 219
COOK, D. H. Variable-Voltage Autotransformer 248
AND AXTMAYER, J. H. Determining Gelatinization Temperature of Starches 226
COOPER, S. R. 2,4-Dihydroxyacetophenone as Qualitative Reagent for Ferric Iron 334
COULL, JAMES. *See* Manning, J. J.
CRAIG, DAVID. Determination of Diarylamines in Rubber Compositions 56
CRAIG, L. C. Fractional-Distillation Microapparatus 441
CROAN, G. F. *See* Smith, G. F.
CRUESS, W. V. *See* Byrne, John.
CUMMINGS, C. E. *See* Thurston, R. R.
CUNNINGHAM, B. B. *See* Saywell, L. G.
CURTMAN, L. J., AND LEHRMAN, LEO. Inexpensive Metal Chimney for Fusions 225

DAMERELL, V. R., AND SPREMULLI, P. Areametric Estimation of Small Amounts of Sulfate as Barium Sulfate 123
DAVENPORT, J. E. *See* Evans, R. N.
DAVIS, L. H. *See* Cone, R. M.
DAVIS, T. W. *See* Burton, Milton.
DEEDS, FLOYD. *See* Eddy, C. W.
DEMPSTER, F. H. *See* Field, Edward
DIVINE, R. E. *See* Smither, F. W.
DONN, LEON. Determining Aniline Point of Dark Petroleum Products 202
DUNBAR, R. E. Macro- or Micro-Gooch Filter 355
DUNCAN, I. J., AND DUSTMAN, R. B. Determination of Coumarin in Sweet Clover. Comparison of Steam-Distillation and Alcoholic-Extraction Methods 471
Determination of Coumarin in Vanilla Extract by Modification of Steam-Distillation Method 416
DUSTMAN, R. B. *See* Duncan, I. J.

EASLY, H. F. Rapid Cleaning of Mercury 82
EDDY, C. W., AND DEEDS, FLOYD. Photoelectric Method for Determination of Phosphorus 12
EHRET, W. F. *See* Straten, F. W. van.
EISNER, ABNER. *See* Fisher, C. H.
ELEK, ADALBERT, AND HARTE, R. A. Volumetric Determination of Iodine Using Elek-Hill Microbomb 502

ELVING, P. J., AND CALEY, E. R. Separation of Magnesium as Oxalate by Precipitation in Concentrated Acetic Acid Solution..... 558
EMBBEE, N. D. *See* Hickman, K. C. D.
EMERSON, R. L., AND WOODWARD, R. B. Pressure Regulator for Vacuum Distillation..... 347
EMMEL, V. M. *See* Rakestraw, N. W.
ENOLIS, D. T., AND LYNN, E. G. Use of Electric Heater for Lane and Eynon Titration of Reducing Sugars..... 314
EVANS, R. N., AND DAVENPORT, J. E. Small Chemical Changes in Insulating Oil Associated with Oxidation..... 321
EVENSON, O. L., KIME, J. A., AND FORREST, S. S. Determination of Small Quantities of 2-Naphthylamine, Aniline, and *o*-Toluidine in Food Dyes..... 74
EWING, D. T., WILSON, M. F., AND HIBBARD, R. P. Spectroscopic Determination of Metals in Small Samples. Calcium, Magnesium, Potassium, Manganese, Iron, and Phosphorus..... 410

FAHEY, J. J. Determination of Mercurous Chloride and Total Mercury in Mercury Ores..... 477
FAULCONER, W. B. M. *See* Bruun, J. H.
FENSKE, M. R. *See* Rescorla, A. R.
FIEDLER, WILLIAM, JR. *See* Hurd, C. B.
FIELD, EDWARD, AND DEMPSTER, F. H. Modification of A. S. T. M. Lamp Sulfur Method for Refined Kerosenes..... 547
FISHER, C. H., AND EISNER, ABNER. Determination of Tar Acids and Bases by Extraction Methods..... 213
Graphic Analysis of Hydrocarbon Oils. Volume–Physical Constants Relationship Resulting from Successive Extractions with Sulfuric Acid..... 366
FOOTE, H. W., AND VANCE, J. E. Comparison of Quantitative Methods for Determination of Copper..... 205
FORBES, E. C., AND BEAMISH, F. E. Surface Effects of Platinum Metals on Silver Assay Beads..... 397
FORBRICH, L. R. *See* MacPherson, D. R.
FORREST, S. S. *See* Evenson, O. L.
FOWLER, D. E. Examination of Rubber Latex and Latex Compounds. II. Chemical Testing Methods..... 63
FRATIS, J. E., AND CONDIT, D. H. Determining Saponification Value of Asphalts and Asphaltic Oils..... 576
FRAZER, J. C. W. *See* Goodloe, Paul.
FREEMAN, H. F. *See* Peterson, W. J.
FREEMAN, K. A., AND THOMPSON, P. J. Noncorrodible Circulating Device..... 532
FREY, F. E. *See* Matuszak, M. P.
FREYER, EGBERT. Rapid Moisture Tester..... 434
FRITTS, S. S. Average Diameter of Particles Just Passing 325-Mesh Sieve..... 180
FRY, E. M. *See* Quiggle, D.
FULTON, R. A. Determination of Chloroform Extract of Beet Leafhopper. Micromethod..... 437

GALL, O. E. *See* Rogers, L. H.
GAMBLE, D. L., AND BARNETT, C. E. Scattering in Near Infrared. Measure of Particle Size and Size Distribution..... 310
GANT, V. A., AND SHAW, H. D. Odor Concentration in Air-Conditioned Structures. Determination by Freezing-Out and Osmoscope Method and Reduction by Activated Carbon..... 16
GARDINEB, W. C., AND SANDERS, H. L. Errors of Glass Electrode.... 274
GARMAN, R. L. *See* Mouquin, H.
GARRETT, O. F. *See* Overman, O. R.
GAYLEY, C. T. Determination of Nitrogen and Carbon in Same Sample..... 422
GEIST, H. H., AND CHANDLEE, G. C. Determination of Zirconium in Steels with *n*-Propylarsonic Acid..... 169
GETZ, C. A. *See* Smith, G. F.
GIESEKING, J. E., AND SNIDER, H. J. Estimation of Potassium in Silicates and Soils..... 232
GINSBURG, L. B. *See* Lurie, J. J.
GIRI, K. V., AND BHAROAVA, P. N. Differentiation of Oils by Enzymic Hydrolysis. Agar Plate Method and Its Application to Detection of Adulteration of Butterfat (Ghee)..... 395
GOODLOE, PAUL. Photometric Determination of Added Phosphorus in Oils..... 527
AND FRAZER, J. C. W. Direct Determination of Oxygen in Organic Compounds by Hydrogenation..... 223
GRAND, C. G. *See* Chambers, Robert.
GRIFFIN, H. K., AND STORCH, H. H. Apparatus for Precise Plasticity Measurements at High Temperatures. Data on Coal Plasticity. 280
GRINO, J. L. *See* Clark, G. L.
GRISWOLD, JOHN. Baumé Hydrometer Correction Table for Sodium Hydroxide Solutions..... 388
GUSTAVSON, R. G. *See* Hearon, W. M.

HALLER, H. L. *See* Nelson, O. A.
HALVERSON, J. O., AND SMITH, F. H. Extraction of Gossypol with Ethers..... 516
HAMILL, W. H. Manometer for Carbon and Hydrogen Pressure Regulation..... 355
AND ALICINO, J. A. Storage of Carbon Dioxide from Dry Ice for Dumas Determinations..... 290
HAN, J. E. S. Carbonate Content of Oil Lye..... 140
HARRIS, E. E. *See* Cohen, W. E.
HARRIS, T. H. *See* Spies, J. R.
HARRISON, J. G., JR. *See* Oldham, E. W.
HART, RALPH. Fractionation and Composition of Sulfonated Oils... 177
HART, W. B. Apparatus for Determining Odor in Water..... 243
HARTE, R. A. *See* Elek, Adalbert.
HASLAM, G. S., AND KLAMAN, C. A. T-50 Test Applied to Zinc Oxide Compounds..... 552
HASSID, W. Z. Determination of Sugars in Plants by Oxidation with Ferricyanide and Ceric Sulfate Titration..... 228
HAUGHTON, C. O. Estimation of Acetone..... 167
HAYMAN, D. F., AND ADLER, SOL. Microanalysis of Nitrogen in Pyrimidines by Dumas Method..... 197
HEADINGTON, C. E. *See* Kurtz, S. S., Jr.
HEARON, W. M., AND GUSTAVSON, R. G. Semimicro Qualitative Test for Nitro Group in Organic Compounds..... 352
HECKER, J. C. *See* Hickman, K. C. D.
HEDRICK, J. E. *See* Winters, C. E.
HEINEMANN, GUSTAVE, AND RAHN, H. W. Estimation of Total Reducible Sulfur in Caustic Soda..... 458
HENNE, A. L. *See* Renoll, M. W.
HENNION, G. F. Self-Filling Pycnometer..... 479
HERMANCE, H. W. *See* Clarke, B. L.
HERSHBERG, E. B., AND WELLWOOD, G. W. Carbon Dioxide Generator for Micro-Dumas Determination of Nitrogen..... 303
HERTZOG, E. S. Rapid Analysis of Barite Ores Containing Calcium Fluoride without Use of Fusions..... 336
HIBBARD, P. L. Dithizone Method for Measurement of Small Amounts of Zinc..... 127
HIBBARD, R. P. *See* Ewing, D. T.
HICKMAN, K. C. D., HECKER, J. C., AND EMBREE, N. D. Direct Determination of Low Vapor Pressures..... 264
HILLYER, J. C. Determination of Common and Rare Alkalies. Note on Wells and Stevens' Method..... 236
HOCHBERG, SEYMORE, AND LA MER, V. K. Microdetermination of Density by Falling-Drop Method..... 291
HODGINS, T. S. *See* Hovey, A. G.
HOLMES, A. D., TRIPP, FRANCIS, AND SATTERFIELD, G. H. Vitamin A Content of Cod Liver Oil. Comparison of Spectrophotometric and Chemical Methods..... 456
HOLMES, F. E. Thermoregulator for Direct Control of Electric Circuit in Heating Bath..... 481
HOVEY, A. G., AND HODGINS, T. S. Qualitative Determination of Glycerol and Ethylene Glycol in Dilute Aqueous Solution..... 509
HOWELL, H. C. *See* Schweyer, H. E.
HUBBARD, D. M. Determination of Lead. Photometric Dithizone Method as Applied to Certain Biological Material..... 493
See also Cholak, Jacob.
HUFF, W. J. *See* Bonney, D. T.
HUGG, H. *See* Robinson, H.
HUGHES, E. E., AND ACREE, S. F. Analysis of Mixtures of Furfural and Methylfurfural..... 318
HUGHES, J. S. *See* Peterson, W. J.
HUNT, H. *See* Anhorn, V. J.
HURD, C. B., AND FIEDLER, WILLIAM, JR. Analysis of Sodium Acetate. 116
HURLEY, F. H., JR. Borax as Acidimetric Standard. II..... 237
Calibration of Weights..... 239

JACKSON, D. T., AND PARSONS, J. L. Sodium Chlorite as Volumetric Oxidizing Agent..... 14
JONES, H. A. Determination of Rotenone in Derris and Cube. Crystallization from Extracts..... 206
JORDAN, H. F., BRASS, P. D., AND ROE, C. P. Examination of Rubber Latex and Rubber Latex Compounds. I. Physical Testing Methods..... 182
JORGENSEN, P. S. *See* Yakowitz, M. L.
JOSEPH, LIONEL. Simplified Sealed Stirrer..... 212

KAHLER, H. L. *See* Sheen, R. T.
KAMPF, L. *See* Bayor, E. H.
KEANE, J. C., AND BRICE, B. A. Photoelectric Grading of White Sugars and Their Solutions by Reflectance and Transmittancy Measurements..... 258
KEBSTEIN, N. A. *See* Piper, J. D.
KIMBALL, R. H., WITTENBURG, H. H., AND MACFADYEN, D. E. Improved Semimicro and Micro-Carius Determination..... 48
KIME, J. A. *See* Evenson, O. L.
KINGSBURY, R. M. Simple Gas Thermoregulator..... 333
KIRK, P. L. *See* Manov, G. G.
KIRNER, W. R. Direct Microdetermination of Oxygen in Organic Substances by Hydrogenation. Analysis of Pure, Volatile Compounds Containing Carbon, Hydrogen, and Relatively Low Percentages of Oxygen..... 535
Microchemical Balance Room..... 300
KLAMAN, C. A. *See* Haslam, G. S.
KNAPP, I. E. Determination of Unsaponifiable Matter in Rosin..... 315
KOCHOR, S. J. Determination of Barium, Sulfur, and Sulfates..... 331
KOLTHOFF, I. M., AND YUTZY, H. Volumetric Determination of Bromide after Oxidation to Bromate in Presence of Much Chloride.. 75
KOMICH, A. J. *See* Baker, C. P.
KOPAC, M. J. *See* Chambers, Robert.
KRCHMA, L. C. *See* Mason, Seward, *and* Nevitt, H. G.
KRETCHMAR, L. L. *See* Tartar, H. V.
KU, P. S. Direct Determination of Eleostearic Acid in Tung Oil. (Correction, 588)..... 103
KURTZ, S. S., JR., AND HEADINGTON, C. E. Analysis of Light Petroleum Fractions..... 21

LA MER, V. K., AND TOMLINSON, H. M. Stability of Solid Sodium Thiosulfate..... 588
See also Hochberg, Seymore.
LANGLYKKE, A. F., AND PETERSON, W. H. Determination of Acetylmethylcarbinol. Effect on Analytical Procedures..... 163
LAWSHE, E. I. *See* Penniman, W. B. D.
LEE, M. F. *See* Churchill, H. V.
LEHRMAN, LEO. *See* Curtman, L. J.
LEITH, T. B. *See* Weakley, C. E., Jr.
LEMON, J. M. *See* Stansby, M. E.
LESSIG, E. T. Goodrich Flexometer..... 582
LEVI, G. R. Calcium Chlorite as Volumetric Oxidizing Agent (Correspondence)..... 250
LEVIN, HARRY. Micromethod for Determining Viscosity of Lubricating Oils..... 147
AND UHRIG, KARL. Determination of Carbon and Hydrogen in Gasoline and Other Volatile Liquids..... 326
LEVIN, I. *See* Weisberg, S. M.
LEWIS, J. B., AND BALDESCHWIELER, E. L. Determination of Arsenic in Mineral Oil Solutions..... 405
LIEBHAFSKY, H. A. Rapid Analysis of Zinc-Sodium Amalgams..... 176
LINE, W. R., AND ARADINE, P. W. Determination of Quartz in Presence of Silicates..... 60
LINK, K. P. *See* Roberts, W. L.
LJUNG, H. A. New Qualitative Test for Selenium. I..... 328
LONG, C. P. *See* Smither, F. W.
LOOMIS, R. J. *See* Mason, Seward.
LOWE, C. S. *See* White, C. E.
LOWY, ALEXANDER. *See* Phillips, Joseph.
LUCAS, H. J. *See* Redemann, C. E.
LURIE, J. J., AND GINSBURG, L. B. Internal Electrolysis without Diaphragms. Determination of Copper and Bismuth in Lead-Zinc Ores..... 424

LYNCH, D. F. J. *See* Reid, J. D.
LYNN, E. G. *See* Englis, D. T.

MCCROSKY, C. R. *See* Coleman, W. C.
MACFADYEN, D. E. *See* Kimball, R. H.
MCFARLAN, R. L., REDDIE, J. W., AND MERRILL, E. C. New Photoelectric Method for Measuring Vitamin A 324
MCHARGUE, J. S. *See* Calfee, R. K.
MACHATTIE, I. J. W., AND MACONACHIE, J. E. Determination of Small Quantities of Oxygen in Gases and Liquids 364
MCLEOD, K. N. *See* Caldwell, W. E.
MCMILLAN, W. A. Determination of Butenes in Refinery Gases 511
MCNABB, W. M. *See* Reber, L. A.
MCNARY, R. R. *See* Cholak, Jacob.
MACNEVIN, W. Microcentrifuge 356
MACONACHIE, J. E. *See* MacHattie, I. J. W.
MACPHERSON, D. R., AND FORBRICH, L. R. Determination of Uncombined Lime in Portland Cement. Ethylene Glycol Method. 451
MCPHERSON, W. K., AND CHRISTENSEN, L. M. Reaction of Alcohol-Gasoline Blends to Doctor Test 433
MANNING, J. J., AND COULL, JAMES. Spectrographic Determination of Platinum by Constant-Pair Method 28
MANOV, G. G., AND KIRK, P. L. Determination of Sulfate Ion. Microvolumetric Chromate Method 198
MASON, SEWARD, LOOMIS, R. J., PATTERSON, S. D., NEVITT, H. G., AND KRCHMA, L. C. Physical Properties of Asphalt. Viscosity-Temperature Susceptibility 138
MATER, H. L. VAN. *See* Schneider, Frank.
MATUSZAK, M. P., AND FREY, F. E. Separating Butenes from Butanes. Distillation of Azeotropic Mixtures with Sulfur Dioxide. 111
MAUDE, A. H. Gas-Tight Laboratory Stirring Device for Pasty Materials 196
MEHLIG, J. P. Spectrophotometric Method for Determination of Iron in Ores 162
MELLON, M. G. Role of Spectrophotometry in Colorimetry 51
See also Swank, H. W., *and* Wright, E. R.
MERRILL, E. C. *See* McFarlan, R. L.
MIDGLEY, THOMAS, JR. *See* Redoll, M. W.
MILLER, E. L. *See* Bright, W. M.
MILLER, H. S. Effect of Time on Iodometric Method of Sugar Analysis 37
Separation of Beryllium in Presence of Complex Tartrates 221
MILLER, J. F. New Reagent for Detection of Cerium 181
MITCHELL, D. F. *See* Brennan, J. J.
MORGAN, C. E. Extraction of Minute Amounts of Morphine. Use of Pyrogallol for Preventing Losses Due to Oxidation 383
MORGAN, H. H. *See* Brown, E. H.
MORGAN, M. D. *See* Baldeschwieler, E. L.
MORRIS, H. J., AND CALVERY, H. O. Quantitative Determination of Arsenic in Small Amounts in Biological Materials. (Correction, 591) 447
MOUQUIN, H., AND GARMAN, R. L. Low-Resistance Glass Electrodes. 287
MRGUDICH, J. N., AND CLARK, G. L. Determination of Lead Peroxide. 256
MURER, H. K. Determining Calcium in Blood Serum 27

NELSON, O. A., AND HALLER, H. L. Constant-Temperature Bath for Molecular Stills 402
NEVITT, H. G., AND KRCHMA, L. C. Effect of Temperature on Consistency of Asphalts. Viscosity-Temperature Susceptibility Coefficient as Index 119
See also Mason, Seward.
NOLAN, E. J. *See* Schumb, W. C.

OLDHAM, E. W., AND HARRISON, J. G., JR. Determination of Free Carbon in Rubber Goods 278
OVERMAN, O. R., AND GARRETT, O. F. Determination of Sodium. Removal of Phosphorus before Determining Sodium by Uranyl Zinc Acetate Method 72

PALMER, L. S. Biological Assay of Vitamin E. Application to Wheat Germ and Wheat Germ Oil 427
PARSONS, J. L. Calcium Chlorite as Volumetric Oxidizing Agent (Correspondence) 250
See also Jackson, D. T.
PARTRIDGE, H. M. *See* Bowles, J. A. C.
PATTERSON, S. D. *See* Mason, Seward.
PENNIMAN, W. B. D., SMITH, D. C., AND LAWSHE, E. I. Determination of Higher Alcohols in Distilled Liquors 91
PETERSON, W. H. *See* Langlykke, A. F.
PETERSON, W. J., HUGHES, J. S., AND FREEMAN, H. F. Determination of Carotene in Forage. Modification of Guilbert Method. 71
PHILLIPS, JOSEPH, WITH LOWY, ALEXANDER. Titration of Aromatic Amines with Nitrous Acid 381
PIECHOWSKI, R. J. *See* Calderwood, H. N.
PIPER, J. D., AND KERSTEIN, N. A. Enclosed Apparatus for Laboratory Crystallizations 403
POLAND, G. L. *See* Brenner, M. W.
POWER, M. H. *See* Roxburgh, D. B.
PROCTER & GAMBLE COMPANY, CHEMICAL DIVISION. Electrometric Titration of Dichromate Glycerol Samples 514

QUIGGLE, D., TONGBERG, C. O., AND FRY, E. M. Apparatus for Freezing Point Determinations 579
QUILL, L. L., ROBEY, R. F., AND SEIFTER, SAM. Rare Earth Metals and Their Compounds. Thermal Analysis of Rare Earth Nitrate Mixtures 389

RACHELE, J. R. *See* Benedetti-Pichler, A. A.
RAHN, H. W. *See* Heinemann, Gustave.
RAKESTRAW, N. W., AND EMMEL, V. M. Determination of Dissolved Nitrogen in Water 344
RALL, H. T. Physical and Chemical Properties of Petroleum Fractions. I. Behavior in Dilute Benzene Solutions (Correction), 222; II. Relations between Molecular Weight and Concentration in Dilute Solution (Correction) 222
RAUSCHER, W. H. Determination of Alkyl and Aryl Halogen in Presence of Each Other 503
Micro-, Semimicro-, and Macrodetermination of Halogens in Organic Compounds 296
REBER, L. A., AND MCNABB, W. M. Determination of Chlorides and Bromides 529
REDDIE, J. W. *See* McFarlan, R. L.
REDEMANN, C. E., AND LUCAS, H. J. Rapid Saponification of Esters by Potassium Hydroxide in Diethylene Glycol 521
REES, O. W. Determining Ash in High-Carbonate Coals 307
REID, J. D., AND LYNCH, D. F. J. Cellulose Analysis. Comparison of Three Principal Methods 570
RENOLL, M. W., MIDGLEY, THOMAS, JR., AND HENNE, A. L. Determination of Carbon and Hydrogen Content by Combustion .. 566
RESCORLA, A. R., CARNAHAN, F. L., AND FENSKE, M. R. Development of Acidity in Lubricating Oils in Use or Oxidation 574
Electrometric Titration of Acids in Oxidized Petroleum Oils 505
RIGLER, N. E. Buret-Filling Device for Portable Reagent Reservoirs 436
ROBERTS, W. L., AND LINK, K. P. Determination of Coumarin and Melilotic Acid. Rapid Micromethod for Determination in Melilotus Seed and Green Tissue 438
ROBEY, R. F. *See* Quill, L. L.
ROBINSON, H., AND HUGG, H. Electrometric Method for Determination of Silver 565
ROE, C. P. *See* Jordan, H. F.
ROGERS, L. H., AND GALL, O. E. Microdetermination of Zinc. Comparison of Spectrographic and Chemical Methods 42
ROPER, E. E. Physical Method for Drying Liquefied Hydrocarbons. 414
ROWLEY, R. J., AND CHURCHILL, H. V. Titration of Fluoride in Aqueous Solutions 551
See also Churchill, H. V.
ROXBURGH, D. B., AND POWER, M. H. Simple Electrodialyzer 578
RUSHTON, E. R. *See* Brown E. H.
RUSSELL, J. J., BEAMISH, F. E., AND SEATH, J. Determination of Osmium in Lead Assay Button 475
See also Beamish, F. E.
RUSSELL, W. W. New Method in Pycnometric Analysis 592

SAGER, T. P. Preparation of Thin Films 156
SANDELL, E. B. Determination of Copper, Zinc, and Lead in Silicate Rocks 464
SANDERS, H. L. *See* Gardiner, W. C.
SASCHEK, WILLIAM. Microdetermination of Organic Sulfur 491
SATTERFIELD, G. H. *See* Holmes, A. D.
SATTLER, LOUIS. *See* Zerban, F. W.
SAYWELL, L. G., AND CUNNINGHAM, B. B. Determination of Iron. Colorimetric *o*-Phenanthroline Method 67
See also Byrne, John.
SCHNEIDER, FRANK, AND MATER, H. L. VAN. Determination of Carbon and Hydrogen. Electrically Heated, Thermostatically Controlled Constant-Temperature Device for Pregl C-H Determination 295
SCHOMAKER, VERNER, AND BROWN, D. J. Standard Quinhydrone Electrode 34
SCHUH, A. E., AND THEUERER, H. C. Measurement of Distensibility of Organic Finishes 9
SCHULTZ, JULIUS. *See* Christman, A. A.
SCHUMB, W. C., AND NOLAN, E. J. Arsenate Method for Determination of Zirconium. (Correction, 562) 371
SCHWEYER, H. E. Measurement of Particle-Size Distribution by Optical Methods 211
AND HOWELL, H. C. Determination of Stain Number of Asphalts. 563
SCOTT, J. E., AND WEST, E. S. Simplified Micro-Kjeldahl Apparatus. 50
SCOTT, M. *See* Beamish, F. E., *and* Thompson, S. O.
SEATH, J., AND BEAMISH, F. E. Separation of Gold from Tellurium and Selenium 373
See also Beamish, F. E., *and* Russell, J. J.
SEEVERS, M. H., AND STORMONT, R. T. Micromethod of Gas Analysis Adapted for Biological Studies 39
SEIFTER, SAM. *See* Quill, L. L.
SENDROY, JULIUS, JR. Vessels for Storage of Gases and Liquids 190
SHAEFER, W. E. Determination of Glycol or Glycerol in Dilute Solutions Containing Oxidizable Impurities 449
SHAW, H. D. *See* Gant, V. A.
SHEAD, A. C. Angular Constants of Microcrystalline Profiles and Silhouettes in Conclusive Identification of Substances 496
SHEEHAN, W., AND CARMODY, W. Simple Laboratory Ozonizer 8
SHEELY, M. L. *See* Smither, F. W.
SHEEN, R. T., KAHLER, H. L., AND CLINE, D. C. Determination of Sulfur in Rubber. Tetrahydroxyquinone as Titration Indicator .. 69
SHUMAN, A. C., AND BERRY, N. E. Determination of Sulfate, Calcium, and Magnesium in Salt Samples of High Purity 77
SIDERIS, C. P. Colorimetric Microdetermination of Cobalt and Potassium 145
Colorimetric Microdetermination of Manganese 445
SMITH, D. C. *See* Penniman, W. B. D.
SMITH, F. H. Revised Method for Estimation of Gossypol in Cottonseed Meal 517
See also Halverson, J. O.
SMITH, G. F., AND CROAD, G. F. Anhydrous Sodium Carbonate as Standard of Reference in Acidimetry 141
AND GETZ, C. A. Determination of Chromium in Chromite. New Procedure Employing Mixture of Phosphoric, Sulfuric, and Perchloric Acids 518
Determination of Chromium in Ferrochrome. Phosphoric Acid as Solvent with Mixed Perchloric and Sulfuric Acids as Oxidant. 378
Rate of Dehydration of Ethyl Alcohol Using Metallic Calcium 100
AND WILCOX, C. S. Wood's Metal Reductor 419
SMITH, J. G. *See* Thornton, W. M., Jr.
SMITH, J. L. Feeding Device for Boiler Compound 330
SMITH, W. C. Influence of Solvent on Saponification Number of Rosin 469
SMITHER, F. W., DIVINE, R. E., LONG, C. P., SHEELY, M. L., TREVITHICK, H. P., AND WALKER, P. H. Standard Methods for Sampling and Analysis of Commercial Soaps and Soap Products, Revised ... 2
SNIDER, H. J. *See* Gieseking, J. E.
SPIES, J. R. Determination of Small Quantities of Nicotine by Silicotungstic Acid Micromethod 46
AND HARRIS, T. H. Nitrogen Determination in Refractory Substances by Modification of Dumas Micromethod 304

SPREMULLI, P. *See* Damerell, V. R.
STANLEY, JOSEPH. Refractometric Determination of Fat in Chocolate. 132
STANSBY, M. E., AND LEMON, J. M. Quantitative Determination of Oil in Fish Flesh..... 341
STEVENS, R. E. *See* Wells, R. C.
STEWART, O. J., AND CARRUTH, W. L. Glass-Enclosed Metallic Reference Electrode..... 581
STOBCH, H. H. *See* Griffin, H. K.
STORMONT, R. T. *See* Seevers, M. H.
STORY, R. V. *See* Cholak, Jacob.
STRATEN, F. W. VAN, AND EHRET, W. F. Removal of Static Charges from Glassware Using High-Frequency Discharge..... 443
STRUTHERS, J. D. *See* Clarke, B. L.
SWANK, H. W., WITH MELLON, M. G. Determination of Iron with 7-Iodo-8-hydroxyquinoline-5-sulfonic Acid..... 406

TANG, N. K. *See* Willard, H. H.
TARTAR, H. V., COLMAN, I. S., AND KRETCHMAR, L. L. Determination of Primary Calcium Phosphate in Mixtures of Calcium Orthophosphates..... 384
THEUERER, H. C. *See* Schuh, A. E.
THOMPSON, P. J. *See* Freeman, K. A.
THOMPSON, S. O., BEAMISH, F. E., AND SCOTT, M. Determination of Gold and Platinum and Detection of Platinum Metals..... 420
THOMPSON, W. C. *See* Brennan, J. J.
THORNTON, W. M., JR., AND CHRIST, C. L. Diphenylguanidine as Standard in Neutralization Processes..... 339
AND SMITH, J. G. Support for Perforated Platinum Crucibles..... 95
THURSTON, R. R., AND CUMMINGS, C. E. Improved Machine for Testing Ductility of Bituminous Substances..... 286
TIERNEY, F. P. *See* Brennan, J. J.
TOMLINSON, H. M. *See* La Mer, V. K.
TONGBERG, C. O. *See* Quiggle, D.
TREVITHICK, H. P. *See* Smither, F. W.
TRIPP, FRANCIS. *See* Holmes, A. D.
TROELLER, W. J. *See* Baldeschwieler, E. L.

UBBELOHDE, LEO. Principle of Suspended Level. Applications to Measurements of Viscosity and Other Properties of Liquids. (Correction, 418)..... 85
UHRIG, Karl. *See* Levin, Harry.
ULMER, RICHARD. Foaming and Priming of Boiler Water and Condenser Leakage. Electrometric Measurement..... 172

VALDEZ, R., AND CAMPS-CAMPINS, F. Determination of Ash Content of Sugar Products..... 35
VANCE, J. E. *See* Foote, H. W.
VOLMAN, D. H. *See* Blacet, F. E.

WALKER, P. H. *See* Smither, F. W.
WAUGH, J. G. Precise Determination of Carbon Dioxide in Air..... 96
WEAKLEY, C. E., JR., AND LEITH, T. B. Apparatus for Crude-Fiber Determination..... 194
WEISBERG, S. M., AND LEVIN, I. Estimation of Riboflavin. Simple Fluorescent Method..... 523
WELLS, R. C., AND STEVENS, R. E. Analysis of Pollucite..... 236
WELLWOOD, G. W. *See* Hershberg, E. B.
WEST, E. S. *See* Scott, J. E.
WEST, S. D. *See* Bruun, J. H.
WHITE, C. E., AND LOWE, C. S. New Fluorescent Test for Aluminum. 430
WILCOX, C. S. *See* Smith, G. F.
WILCOX, L. V. Determination of Potassium by Means of Aqueous Solution of Trisodium Cobaltinitrite in Presence of Nitric Acid... 136
WILHELM, H. A. Quantitative Spectrographic Analysis. Increased Accuracy in Logarithmic Sector Method..... 170
WILLARD, H. H., AND TANG, N. K. Quantitative Determination of Aluminum by Precipitation with Urea..... 357
WILSON, M. F. *See* Ewing, D. T.
WINCHESTER, R., AND YNTEMA, L. F. Quantitative Electrodeposition of Zinc from Acid Citrate Solutions..... 254
WINSOR, H. W. Intensity and Stability of Ferric Thiocyanate Color Developed in 2-Methoxyethanol..... 453
WINTERS, C. E., AND HENRICK, J. E. Laboratory Distillation and Vacuum Flash Unit..... 189
WITTENBURG, H. H. *See* Kimball, R. H.
WOHLER, L. A. Physical Testing Procedure for Latex Stocks..... 117
WOODWARD, R. B. *See* Emerson, R. L.
WOOLLEY, D. W. Improved Extractor for Monoamino Acids..... 433
WOOTEN, L. A. *See* Clarke, B. L.
WRIGHT, E. R., WITH MELLON, M. G. Peroxide Method for Vanadium. Spectrophotometric Study..... 375
Phosphotungstate Method for Vanadium. Spectrophotometric Study..... 251

YAGODA, HERMAN. Applications of Confined Spot Tests in Analytical Chemistry..... 79
YAKOWITZ, M. L., AND JORGENSEN, P. S. Refractive Index of Strontium Nitrate..... 204
YERZLEY, F. L. Evaluation of Rubber and Rubberlike Compositions as Vibration Absorbers..... 392
YNTEMA, L. F. *See* Winchester, R.
YUTZY, H. *See* Kolthoff, I. M.

ZAHN, VICTOR. Determination of Small Proportions of Sulfur by Modification of A. S. T. M. Lamp Method..... 543
ZERBAN, F. W., AND SATTLER, LOUIS. Absolute Turbidity of Raw Sugars..... 455
Turbidity in Sugar Products. V. Color and Turbidity of Hard Refined Sugars..... 229

SUBJECT INDEX

INDUSTRIAL AND ENGINEERING CHEMISTRY

ANALYTICAL EDITION

VOLUME 9—1937

ABSORPTION Apparatus for Gases in Laboratory. M. W. Brenner and G. L. Poland 480
Acetic Acid, Magnesium Separated as Oxalate in Concentrated Solution of. P. J. Elving and E. R. Caley 558
Acetone Estimation. C. O. Haughton 167
Acetyl Microdetermination, Especially in O-Acetyl Compounds. E. P. Clark 539
Acetylmethylcarbinol Determination. A. F. Langlykke and W. H. Peterson 163
ACIDS:
Acidimetry, Borax as Standard for. II. F. H. Hurley, Jr. 237
Acidimetry, Sodium Carbonate as Reference Standard in. G. F. Smith and G. F. Croad 141
Determination of, from Tar by Extraction. C. H. Fisher and Abner Eisner 213
in Oxidized Petroleum Oils, Electrometric Titration of. A. R. Rescorla, F. L. Carnahan, and M. R. Fenske 505
(*See also kind of acid.*)
Air, Carbon Dioxide Determination in. J. G. Waugh 96
Air, Carbon Monoxide Determination in. A. A. Christman, W. D. Block, and Julius Schultz 153
Air Conditioning of Structures, Determination of Odor Concentration in. V. A. Gant and H. D. Shaw 16
ALCOHOLS:
Butanol, Kauri Microtest for Solvent Power. II. E. L. Baldeschwieler, M. D. Morgan, and W. J. Troeller 540
Ethyl, Blend with Gasoline. *See* Fuel, Motor.
Ethyl, Dehydration Rate with Metallic Calcium. G. F. Smith and C. A. Getz 100
Fusel Oil Determination in Distilled Liquors. W. B. D. Penniman, D. C. Smith, and E. I. Lawshe 91
Alkali Determination in Pollucite:
J. C. Hillyer 236
R. C. Wells and R. E. Stevens 236
ALLOYS:
of Aluminum, Determination of Silicon in. H. V. Churchill, R. W. Bridges, and M. F. Lee. (Correspondence, L. H. Callendar; Churchill, Bridges, and Lee, 533) 201
Arsenic Determination in. C. W. Anderson 569
Wood's Metal Reductor. G. F. Smith and C. S. Wilcox 419
ALUMINUM:
Determination by Precipitation with Urea. H. H. Willard and N. K. Tang 357
Fluorescent Test for. C. E. White and C. S. Lowe 430
Silicon Determination in, and in Alloys of. H. V. Churchill, R. W. Bridges, and M. F. Lee. (Correspondence, L. H. Callendar; Churchill, Bridges, and Lee, 533) 201
Amalgam of Zinc-Sodium, Analysis of. H. A. Liebhafsky 176
Amines, Aromatic, Titration with Nitrous Acid. Joseph Phillips and Alexander Lowy 381
Amino Acids, Mono-, Extractor for. D. W. Woolley 433
Aniline Determination in Food Dyes. O. L. Evenson, J. A. Kime, and S. S. Forrest 74
Aniline Point Determination in Dark Petroleum Products. Leon Donn. 202
Archeology. Microchemical Analysis of Pigments in Fossae of Incisions of Chinese Oracle Bones. A. A. Benedetti-Pichler 149
Areametric Estimation of Sulfate as Barium Sulfate. V. R. Damerell and P. Spremulli 123
Arsanilic Acid, Cerium Detection by. J. F. Miller 181
Arsenate, Zirconium Determination by. W. C. Schumb and E. J. Nolan. (Addendum, 562) 371
ARSENIC:
Determination in Mineral Oil Solutions. J. B. Lewis and E. L. Baldeschwieler 405
Determination in White Metals. C. W. Anderson 569
Microdetermination in Biological Materials. H. J. Morris and H. O. Calvery. (Correction, 591) 447
Arsenious Oxide in Potassium Permanganate Standardization. H. A. Bright 577
ASPHALT:
Consistency, Effect of Temperature on. H. G. Nevitt and L. C. Krchma 119
Physical Properties. Viscosity-Temperature Susceptibility. Seward Mason, R. J. Loomis, S. D. Patterson, H. G. Nevitt, and L. C. Krchma 138
Saponification Value Determined in Asphalt Oils and. J. E. Fratis and D. H. Condit 576
Stain Number Determined. H. E. Schweyer and H. C. Howell 563
Authors, Note to 1, 306

BALANCE Room. *See* Microchemistry, Apparatus.
Balances, Micro-, Highly Sensitive to Temperature. Fritz Breuer ... 354
Barite Ores, Analysis of, Containing Calcium Fluoride. E. S. Hertzog. 336
Barium Determination. S. J. Kochor 331
Barium Sulfate, Areametric Estimation of Sulfate as. V. R. Damerell and P. Spremulli 123
Bases, Determination of, from Tar by Extraction. C. H. Fisher and Abner Eisner 213
Baumé Hydrometer. *See* Hydrometer.
Beet Leafhopper. *See* Insects.
Berl-Kullmann. *See* Melting Point Apparatus.
Beryllium Separation in Presence of Complex Tartrates. H. S. Miller 221
BEVERAGES, ALCOHOLIC:
Distilled Liquors, Determination of Higher Alcohols in. W. B. D. Penniman, D. C. Smith, and E. I. Lawshe 91
Whisky, Fusel Oil Determination in. W. B. D. Penniman, D. C. Smith, and E. I. Lawshe 91
Wine, Iron Content of. John Byrne, L. G. Saywell, and W. V. Cruess 83
BIOLOGICAL MATERIAL:
Arsenic Microdetermination in. H. J. Morris and H. O. Calvery. (Correction, 591) 447
Blood Serum, Calcium Determination in. H. K. Murer 27
Gas Analysis by Micromethod. M. H. Seevers and R. T. Stormont. 39
Lead Determination in. Comparison of Spectrographic, Dithizone, and Carbazide Methods. Jacob Cholak, D. M. Hubbard, R. R. McNary, and R. V. Story 488
Lead Determination in. Photometric Dithizone Method. D. M. Hubbard 493
Spectrographic Analysis of. II. Bismuth. Jacob Cholak 26
Vitamin E Assay. Application to Wheat Germ and Wheat Germ Oil. L. S. Palmer 427
Bismuth Determination in Biological Material by Spectrographic Method. Jacob Cholak 26
Bismuth Determination in Lead-Zinc Ores by Internal Electrolysis. J. J. Lurie and L. B. Ginsburg 424
Bituminous Substances, Ductility of, Improved Machine for Testing. R. R. Thurston and C. E. Cummings 286
Blood. *See* Biological Material.
Bomb, Micro-, of Elek and Hill, for Volumetric Determination of Iodine. Adalbert Elek and R. A. Harte 502
Borax as Acidimetric Standard. II. F. H. Hurley, Jr. 237
Boron Determination by Spectroscopic Method. R. K. Calfee and J. S. McHargue 288
Bromide Determination. L. A. Reber and W. M. McNabb 529
Bromide Determination, Volumetric. I. M. Kolthoff and H. Yutzy. 75
Buret-Filling Device for Portable Reagent Reservoirs. N. E. Rigler. 436
Butanes, Separating Butenes from. M. P. Matuszak and F. E. Frey. 111
Butanol. *See* Alcohols.
Butene Determination in Refinery Gases. W. A. McMillan 511
Butenes, Separation of, from Butanes. M. P. Matuszak and F. E. Frey 111
Butterfat. *See* Fats.

CABLE Insulation Oil, Chemical Changes in, Associated with Oxidation. R. N. Evans and J. E. Davenport 321
CALCIUM:
Determination:
in Blood Serum. H. K. Murer 27
in Salt of High Purity. A. C. Shuman and N. E. Berry 77
in Small Samples by Spectroscopic Method. D. T. Ewing, M. F. Wilson, and R. P. Hibbard 410
Metallic, Rate of Dehydration of Ethyl Alcohol with. G. F. Smith and C. A. Getz 100
Calcium Fluoride in Barite Ores, Analysis of. E. S. Hertzog 336
Calcium Oxide, Uncombined, Determination in Portland Cement. D. R. MacPherson and L. R. Forbrich 451
Calcium Phosphate Determination in Mixtures of Calcium Orthophosphates. H. V. Tartar, I. S. Colman, and L. L. Kretchmar 384
Carbazide for Lead Determination in Biological Materials. Jacob Cholak, D. M. Hubbard, R. R. McNary, and R. V. Story 488
CARBON:
Activated, Determination of Odor Concentration in Air-Conditioned Structures by Freezing-out and Osmoscope Method, and Reduction by. V. A. Gant and H. D. Shaw 16
Determination:
by Combustion. M. W. Renoll, Thomas Midgley, Jr., and A. L. Henne 566
in Constant-Temperature Device. Frank Schneider and H. L. van Mater 295
in Gasoline and Other Volatile Liquids. Harry Levin and Karl Uhrig 326
in Presence of Nitrogen. C. T. Gayley 422
Manometer for Pressure Regulation of Hydrogen and. W. H. Hamill 355
Carbon Black Determination in Rubber Goods. E. W. Oldham and J. G. Harrison, Jr. 278
CARBON DIOXIDE:
Determination in Air. J. G. Waugh 96
Solid, Storage of Carbon Dioxide from, for Dumas Determinations. W. H. Hamill and J. A. Alicino 290
Solid, Used in Generator for Micro-Dumas Determination of Nitrogen. E. B. Hershberg and G. W. Wellwood 303
Carbon Monoxide Determination in Air. A. A. Christman, W. D. Block, and Julius Schultz 153
Carbonate Content of Oil Lye. J. E. S. Han 140
Carbonate Microdetermination with Dilatometer. B. L. Clarke and H. W. Hermance 597
Carius Method. *See* Halogen.
Carotene Determination in Forage by Guilbert Method. W. J. Peterson, J. S. Hughes, and H. F. Freeman 71
Carotenoids in Yellow Corn, Estimation of. G. L. Clark and J. L. Gring 271
Caustic Soda. *See* Sodium Hydroxide.

Cell, Living, Physical Properties and Microchemical Reactions of. Robert Chambers, M. J. Kopac, and C. G. Grand 143
Cellulose Analysis in Farm Wastes. J. D. Reid and D. F. J. Lynch .. 570
Cement, Portland, Calcium Oxide Determination in. D. R. MacPherson and L. R. Forbrich 451
Centrifuge, Micro-. W. MacNevin 356
Cerium Detection by Arsanilic Acid. J. F. Miller 181
Cesium Determination in Pollucite:
J. C. Hillyer 236
R. C. Wells and R. E. Stevens 236
Chimney of Metal for Fusions. L. J. Curtman and Leo Lehrman 225
Chloride Determination. L. A. Reber and W. M. McNabb 529
Chloroform Extract of Beet Leafhopper, Microdetermination of. R. A. Fulton 437
Chocolate, Fat in, Refractometric Determination of. Joseph Stanley. 132
Chromite Ores. *See following item.*
Chromium Determination in Chromite Ores. G. F. Smith and C. A. Getz 518
Chromium Determination in Ferrochrome. G. F. Smith and C. A. Getz 378
Circulator. *See* Stirrer.
Citrate Solutions, Acid, Electrodeposition of Zinc from. R. Winchester and L. F. Yntema 254
Clover, Coumarin Determination in. I. J. Duncan and R. B. Dustman 471
Clover, Coumarin and Melilotic Acid Microdetermination in. W. L. Roberts and K. P. Link 438
COAL:
Ash Determination in High-Carbonate Coal. O. W. Rees 307
Ash, Fusibility of. J. J. Brennan, D. F. Mitchell, F. P. Tierney, and W. C. Thompson 106
Plasticity, Apparatus for Precise Measurements at High Temperatures. H. K. Griffin and H. H. Storch 280
Cobalt Microdetermination, Colorimetric. C. P. Sideris 145
Cod Liver Oil. *See* Oils, Fish.
COLORIMETRY:
Arsenic in Biological Materials, Microdetermination of. H. J. Morris and H. O. Calvery. (Correction, 591) 447
Cobalt Microdetermination. C. P. Sideris 145
Ferric Thiocyanate Color Developed in 2-Methoxyethanol, Intensity and Stability of. H. W. Winsor 453
Hop Analysis, Soft Resins in. D. E. Bullis 267
Iron by *o*-Phenanthroline Method. L. G. Saywell and B. B. Cunningham 67
Manganese Microdetermination in Plants or Soil. C. P. Sideris ... 445
Potassium Microdetermination. C. P. Sideris 145
Silicate Rocks, Determination of Copper, Zinc, and Lead in. E. B. Sandell 464
Spectrophotometry in. M. G. Mellon 51
COMBUSTION ANALYSES:
Carbon and Hydrogen. M. W. Renoll, Thomas Midgley, Jr., and A. L. Henne 566
Carbon and Hydrogen in Gasoline and Other Volatile Liquids. Harry Levin and Karl Uhrig 326
Gas, by Capillary Combustion Unit. B. E. Christensen and Robert Carlton 400
Constant-Pair Method. *See* Platinum.
COPPER DETERMINATION:
in Lead-Zinc Ores by Internal Electrolysis. J. J. Lurie and L. B. Ginsburg 424
Quantitative Methods Compared. H. W. Foote and J. E. Vance ... 205
in Silicate Rocks. E. B. Sandell 464
by Spot Test. Herman Yagoda 79
Corn, Yellow, Estimation of Carotenoids in. G. L. Clark and J. L. Gring 271
Correspondence 250, 533
Cottonseed Meal, Gossypol Estimation in. F. H. Smith 517
Cottonseed Meal, Gossypol Extraction from, with Different Ethers. J. O. Halverson and F. H. Smith 516
COUMARIN:
Determination in Sweet Clover. I. J. Duncan and R. B. Dustman. 471
Determination in Vanilla Extract. I. J. Duncan and R. B. Dustman 416
Microdetermination in Clover. W. L. Roberts and K. P. Link 438
Crucibles of Perforated Platinum, Support for. W. M. Thornton, Jr. 95
Crystallization Apparatus, Enclosed, for Laboratory. J. D. Piper and N. A. Kerstein 403
Crystals. Microcrystalline Profiles and Silhouettes, Angular Constants of. A. C. Shead 496
Cube. *See* Insecticides.

DENSITY Microdetermination by Falling-Drop Method. Seymore Hochberg and V. K. La Mer 291
Dental Alloys, Platinum in, Spectrographic Determination. J. J. Manning and James Coull 28
Derris. *See* Insecticides.
Dialysis, Protein. F. W. Bernhart, L. E. Arnow, and A. C. Bratton .. 387
Dialyzer, Electro-, for Serum Protein. D. B. Roxburgh and M. H. Power 578
Diethylene Glycol, Ester Saponification by Potassium Hydroxide in. C. E. Redemann and H. J. Lucas 521
2,4-Dihydroxyacetophenone, Ferric Iron Determined by. S. R. Cooper 334
Dilatometer for Microgasometric Analysis. B. L. Clarke and H. W. Hermance 597
Diphenylguanidine as Standard in Neutralization Processes. W. M. Thornton, Jr., and C. L. Christ 339
DISTILLATION:
Apparatus:
Buhhle-Cap Still of Glass, Hundred-Plate Semiautomatic, for Laboratory. J. H. Bruun and W. B. M. Faulconer 192
Buhhle-Cap Still for Low-Boiling Materials, Twenty-Plate, for Laboratory. J. H. Bruun and S. D. West 247
Micro-, for Fractionation. L. C. Craig 441
Molecular Stills, Constant-Temperature Bath for. O. A. Nelson and H. L. Haller 402
Pressure Regulator for Vacuum Distillation. R. L. Emerson and R. B. Woodward 347
Vacuum Flash Unit and, for Laboratory. C. E. Winters and J. E. Hedrick 189
Moisture Determination by. H. N. Calderwood and R. J. Piechowski 520

DITHIZONE:
for Copper, Zinc, and Lead Determination in Silicate Rocks. E. B. Sandell 464
for Lead Determination in Biological Material. Comparison of Spectrographic, Dithizone, and Carbazide Methods. Jacob Cholak, D. M. Hubbard, R. R. McNary, and R. V. Story 488
for Lead Determination in Biological Material by Photometric Method. D. M. Hubbard 493
for Zinc Estimation. P. L. Hibbard 127
Doctor Test. *See* Mercaptans.
Dry Ice. *See* Carbon Dioxide, Solid.
Ductility of Bituminous Substances, Machine for Testing. R. R. Thurston and C. E. Cummings 286
Dumas Method. *See* Nitrogen.
Dyes for Food, Determination of 2-Naphthylamine, Aniline, and *o*-Toluidine in. O. L. Evenson, J. A. Kime, and S. S. Forrest 74

ELECTRODES:
Glass:
Errors of. W. C. Gardiner and H. L. Sanders 274
Low-Resistance. H. Mouquin and R. L. Garman 287
for Rare Earth Salt Studies. J. A. C. Bowles and H. M. Partridge 124
Sensitive and Durable. A. E. Cameron 436
Metallic, Enclosed in Glass. O. J. Stewart and W. L. Carruth 581
Quinhydrone. Verner Schomaker and D. J. Brown 34
Electrodialysis. *See* Dialysis.
ELECTROMETRY:
Acid Titration in Oxidized Petroleum Oils. A. R. Rescorla, F. L. Carnahan, and M. R. Fenske 505
Apparatus. Salt Bridge. W. M. Bright and E. L. Miller 346
Boiler Water and Condenser Leakage, Measurement of Foaming and Priming of. Richard Ulmer 172
Copper and Bismuth Determination in Lead-Zinc Ores by Internal Electrolysis without Diaphragms. J. J. Lurie and L. B. Ginsburg. 424
Glycerol Titration with Dichromate. Procter & Gamble Company, Chemical Division 514
Silver Determination. H. Robinson and H. Hugg 565
Elek-Hill Microbomb. *See* Bomb.
Eleostearic Acid Determination in Tung Oil. P. S. Ku. (Correction, 588) 103
Enzymes, Oil Differentiation and Butterfat Adulteration Determined by. K. V. Giri and P. N. Bhargava 395
Ester Analysis by Saponification with Potassium Hydroxide in Diethylene Glycol. C. E. Redemann and H. J. Lucas 521
Ethyl Alcohol. *See* Alcohols.
Ethyl Ethers, Gossypol Extraction with Various Lots of. J. O. Halverson and F. H. Smith 516
Ethylene Glycol, Calcium Oxide Determination in Portland Cement by. D. R. MacPherson and L. R. Forbrich 451
Ethylene Glycol Determination in Dilute Aqueous Solution. A. G. Hovey and T. S. Hodgins 509
Extraction Apparatus for Liquids with Immiscible Solvents of Greater Density. L. H. Briggs 250
Extraction Apparatus for Monoamino Acids. D. W. Woolley 433

FARM Waste, Cellulose Analysis in. J. D. Reid and D. F. J. Lynch. 570
Fats, Butter, Adulteration Detected by Enzymic Hydrolysis. K. V. Giri and P. N. Bhargava 395
Ferric Iron. *See* Iron.
Ferric Thiocyanate Color Developed in 2-Methoxyethanol, Intensity and Stability of. H. W. Winsor 453
Ferrochrome, Chromium Determination in. G. F. Smith and C. A. Getz 378
Ferron, Iron Determination with. H. W. Swank with M. G. Mellon. 406
Fiber, Crude, Apparatus for Determining. C. E. Weakley, Jr., and T. B. Leith 194
Films, Thin, Preparation of. T. P. Sager 156
Filter Crucible, Microchemical. A. J. Bailey 490
Filter, Macro- or Micro-Gooch. R. E. Dunbar 355
Fish Oil. *See* Oil.
Flexometer. *See* Rubber.
Fluorescent Method for Aluminum. C. E. White and C. S. Lowe 430
Fluorescent Method for Vitamin B_2 (Riboflavin or Lactoflavin). S. M. Weisberg and I. Levin 523
FLUORINE:
Determination in Barite Ores as Calcium Fluoride. E. S. Hertzog. 336
Determination, Interference of Phosphorus in. H. V. Churchill, R. W. Bridges, and R. J. Rowley 222
Titration in Aqueous Solutions by Thorium Nitrate. R. J. Rowley and H. V. Churchill 551
Foaming. *See* Water, Boiler.
Food Dyes, Determination of 2-Naphthylamine, Aniline, and *o*-Toluidine in. O. L. Evenson, J. A. Kime, and S. S. Forrest 74
Forage, Carotene Determination in. W. J. Peterson, J. S. Hughes, and H. F. Freeman 71
Freezing-out Method. *See* Odor.
Freezing Point Determination, Apparatus for. D. Quiggle, C. O. Tongberg, and E. M. Fry 579
Fuel, Motor, Reaction of Alcohol-Gasoline Blends to Doctor Test. W. K. McPherson and L. M. Christensen 433
Furfural Analysis in Mixtures with Methylfurfural. E. E. Hughes and S. F. Acree 318
Fusel Oil. *See* Alcohols.
Fusions, Chimney of Metal for. L. J. Curtman and Leo Lehrman 225

GASES:
Analysis, Capillary Combustion Unit for. B. E. Christensen and Robert Carlton 400
Apparatus. Thermoregulator. R. M. Kingsbury 333
Apparatus. Washing or Absorption Unit for Laboratory. M. W. Brenner and G. L. Poland 480
Butene Determination in, from Refinery. W. A. McMillan 511
Hydrogen Determination in Mixtures of, by New Solution. D. T. Bonney with W. J. Huff 157
Microanalysis. IV. Nitrous Oxide and Methane. F. E. Blacet and D. H. Volman 44
Microanalysis for Biological Studies. M. H. Seevers and R. T. Stormont 39
Microgasometric Analysis with Dilatometer. Carbonate Radical. B. L. Clarke and H. W. Hermance 597

Oxygen Determination in, in Small Quantities. I. J. W. MacHattie and J. E. Maconachie 364
Storage, Vessels for. Julius Sendroy, Jr. 190
Gasoline Blends with Alcohol. *See* Fuel, Motor.
Gasoline, Carbon and Hydrogen Determination in. Harry Levin and Karl Uhrig 326
Glass Electrode. *See* Electrodes.
Glassware, Static Charges Removed from. F. W. van Straten and W. F. Ehret 443
GLYCEROL:
Determination in Dilute Aqueous Solution. A. G. Hovey and T. S. Hodgins 509
Determination in Dilute Solutions Containing Oxidizable Impurities. W. E. Shaefer 449
Titration with Dichromate by Electrometric Method. Procter & Gamble Company, Chemical Division 514
Glycol Determination in Dilute Solutions Containing Oxidizable Impurities. W. E. Shaefer 449
GOLD:
Determination:
by Dimethylglyoxime. S. O. Thompson, F. E. Beamish, and M. Scott 420
in Presence of Platinum Metals. F. E. Beamish, J. J. Russell, and J. Seath 174
by Recovery of Minute Amounts from Solution. W. E. Caldwell and K. N. McLeod 530
Separation from Platinum Metals by Silver Assay Bead. F. E. Beamish and M. Scott 460
Separation from Tellurium and Selenium by Hydroquinone. J. Seath and F. E. Beamish 373
Gooch Filter. *See* Filter.
Gossypol Estimation in Cottonseed Meal. F. H. Smith 517
Gossypol Extraction from Cottonseed Meal with Different Ethers. J. O. Halverson and F. H. Smith 516
Grapes, Iron Content of. John Byrne, L. G. Saywell, and W. V. Cruess 83
Guilbert Method. *See* Carotene.

HALOGEN:
Alkyl and Aryl, Determination in Presence of Each Other. W. H. Rauscher 503
in Organic Compounds, Micro-, Semimicro-, and Macrodetermination. W. H. Rauscher 296
in Organic Compounds, Semimicro- and Micro-Carius Determination. R. H. Kimhall, H. H. Wittenburg, and D. E. MacFadyen. 48
HEAT APPARATUS:
Electric. Fritz Breuer 363
Thermoregulator for Direct Control of Electric Circuit in Heating Bath. F. E. Holmes 481
Thermoregulator for Gas. R. M. Kingshury 333
Hops, Colorimetric Determination of Soft Resins in. D. E. Bullis.. 267
HYDROCARBONS:
Butene Determination in Hydrocarbon Gases. W. A. McMillan. 511
Butenes Separated from Butanes. M. P. Matuszak and F. E. Frey. 111
Freezing Point, Apparatus for Determining. D. Quiggle, C. O. Tongherg, and E. M. Fry 579
Kauri Butanol Microtest for Solvent Power of. II. E. L. Baldeschwieler, M. D. Morgan, and W. J. Troeller 540
Liquefied, Drying by Physical Method. E. E. Roper 414
Oils, Graphic Analysis of, by Extraction with Sulfuric Acid. C. H. Fisher and Ahner Eisner 366
Sulfur Microdetermination in, by Modified Lamp Method. Victor Zahn 543
Sulfur Microdetermination in Refined Kerosenes by Modified Lamp Method. Edward Field and F. H. Dempster 547
(*See also* Organic Compounds, Petroleum, *and kind of hydrocarbon.*)
HYNROGEN:
Determination:
by Combustion. M. W. Renoll, Thomas Midgley, Jr., and A. L. Henne 566
in Constant-Temperature Device. Frank Schneider and H. L. van Mater 295
in Gas Mixtures by New Solution. D. T. Bonney with W. J. Huff 157
in Gasoline and Other Volatile Liquids. Harry Levin and Karl Uhrig 326
Pressure Regulation, Manometer for. W. H. Hamill 355
Hydrogen-Ion Concentration of Rare Earth Salts Determined hy Glass Electrode. J. A. C. Bowles and H. M. Partridge 124
Hydrometer, Baumé, Correction Table for Sodium Hydroxide Solutions. John Griswold 388
Hydroquinone, Gold Precipitation by. F. E. Beamish, J. J. Russell, and J. Seath 174
Hydroquinone, Gold Separation from Tellurium and Selenium by. J. Seath and F. E. Beamish 373

IMPACT Machine. *See* Rubber Testing.
Insecticides. Rotenone Determination in Derris and Cube. H. A. Jones 206
Insects. Beet Leafhopper, Microdetermination of Chloroform Extract of. R. A. Fulton 437
Insulation for Cable, Oil as. Chemical Changes Associated with Oxidation. R. N. Evans and J. E. Davenport 321
Iodate Microdetermination. V. J. Anhorn and H. Hunt 591
Iodine. Determination hy Elek-Hill Microbomh. Adalbert Elek and R. A. Harte 502
7-Iodo-8-hydroxyquinoline-5-sulfonic Acid. *See* Ferron.
Iodometric Method of Sugar Analysis, Effect of Time on. H. S. Miller 37
Iridium. *See* Platinum Metals.
IRON DETERMINATION:
hy Colorimetric *o*-Phenanthroline Method. L. G. Saywell and B. B. Cunningham 67
Ferric, by 2,4-Dihydroxyacetophenone. S. R. Cooper 334
with 7-Iodo-8-hydroxyquinoline-5-sulfonic Acid (Ferron). H. W. Swank with M. G. Mellon 406
in Ores by Spectrophotometric Method. J. P. Mehlig 162
in Small Samples by Spectroscopic Method. D. T. Ewing, M. F. Wilson, and R. P. Hihhard 410
by Wood's Metal Reductor. G. F. Smith and C. S. Wilcox 419

KAURI Butanol Microtest for Solvent Power. II. E. L. Baldeschwieler, M. D. Morgan, and W. J. Troeller 540
Kerosene, Refined, Sulfur Microdetermination in, by Modified Lamp Method. Edward Field and F. H. Dempster 547
KJELDAHL METHOD:
Apparatus:
for Digestion. W. M. Clark 338
Fume Absorher for Digestions. H. G. Cassidy 478
Micro-. J. E. Scott and E. S. West 50
Nitrogen and Carhon Determination in Same Sample. C. T. Gayley 422

LACQUER. *See* Paint.
Lactoflavin. *See* Vitamin B_2.
Lane and Eynon Titration. *See* Sugar.
Latex. *See* Rubber.
LEAD:
Assay Button for Osmium Determination. J. J. Russell, F. E. Beamish, and J. Seath 475
Determination:
in Biological Material. Comparison of Spectrographic, Dithizone, and Carhazide Methods. Jacob Cholak, D. M. Hubhard, R. R. McNary, and R. V. Story 488
in Biological Material hy Photometric Dithizone Method. D. M. Hubhard 493
in Silicate Rocks. E. B. Sandell 464
Impurities in, Microdetermination and Separation of. I. Tin. B. L. Clarke, L. A. Wooten, and J. D. Struthers 349
Ores of Zinc and, Determination of Copper and Bismuth in. L. L. Lurie and L. B. Ginshurg 424
Lead Peroxide Determination. J. N. Mrgudich and G. L. Clark 256
Level, Suspended, Measurement of Viscosity and Other Properties of Liquids hy. Leo Uhbelohde. (Correction, 418) 85
Lignin. *See* Wood.
Lime. *See* Calcium Oxide.
LIQUIDS:
Extraction Apparatus for, with Immiscible Solvents of Greater Density. L. H. Briggs 250
Measurement of Viscosity and Other Properties of, by Suspended Level. Leo Ubbelohde. (Correction, 418) 85
Oxygen Determination in, in Small Quantities. I. J. W. MacHattie and J. E. Maconachie 364
Storage Vessels for. Julius Sendroy, Jr. 190
LUBRICATING OIL:
Acid Content as Measure of Deterioration. A. R. Rescorla, F. L. Carnahan, and M. R. Fenske 574
Micromethod for Determining Viscosity of. Harry Levin 147
Oxidized, from Petroleum, Electrometric Titration of Acids in. A. R. Rescorla, F. L. Carnahan, and M. R. Fenske 505

MAGNESIUM:
Determination in Salt of High Purity. A. C. Shuman and N. E. Berry 77
Determination in Small Samples by Spectroscopic Method. D. T. Ewing, M. F. Wilson, and R. P. Hibhard 410
Separation as Oxalate in Concentrated Acetic Acid. P. J. Elving and E. R. Caley 558
Manganese Determination in Small Samples hy Spectroscopic Method. D. T. Ewing, M. F. Wilson, and R. P. Hihhard 410
Manganese Microdetermination in Plants or Soil by Colorimetric Method. C. P. Sideris 445
Manometer. *See* Pressure Apparatus.
Manuscripts, Note on Preparation of 1, 306
Melilotic Acid, Microdetermination in Clover. W. L. Roberts and K. P. Link 438
Melting Point Block of Berl and Kullmann Modified. F. W. Bergstrom 340
Mercaptans, Doctor Test for, in Alcohol-Gasoline Blends. W. K. McPherson and L. M. Christensen 433
Mercurous Chloride Determination in Mercury Ores. J. J. Fahey... 477
MERCURY:
Cleaning, Rapid Method for. H. F. Easly 82
Determination in Mercury Ores. J. J. Fahey 477
Seal for Stirrers. L. H. Briggs 168
Metals of Platinum Group. *See* Platinum.
Metals, White, Arsenic Determination in. C. W. Anderson 569
Methane in Gases, Microanalysis of. F. E. Blacet and D. H. Volman. 44
2-Methoxyethanol, Intensity and Stability of Ferric Thiocyanate Color Developed in. H. W. Winsor 453
Methylfurfural Mixtures with Furfural, Analysis of. E. E. Hughes and S. F. Acree 318
MICROCHEMISTRY:
Acetyl Determination. E. P. Clark 539
Apparatus:
Balance Room of Microanalytical Laboratory. W. R. Kirner... 300
Balances Highly Sensitive to Temperature. Fritz Breuer 354
Carbon Dioxide Generator for Dumas Determination of Nitrogen. E. B. Hershberg and G. W. Wellwood 303
Centrifuge. W. MacNevin 356
Constant-Temperature Device for Pregl Carbon-Hydrogen Determination. Frank Schneider and H. L. van Mater 295
Filter Crucible. A. J. Bailey 490
Filter, Macro- or Micro-Gooch. R. E. Dunbar 355
for Fractional Distillation. L. C. Craig 441
Kjeldahl. J. E. Scott and E. S. West 50
Manometer for Carhon and Hydrogen Pressure Regulation. W. H. Hamill 355
Reaction Vessel. D. S. Binnington 353
Arsenic Determination in Biological Material. H. J. Morris and H. O. Calvery. (Correction, 591) 447
Beet Leafhopper, Determination of Chloroform Extract of. R. A. Fulton 437
Cell, Living, Reactions of. Robert Chambers, M. J. Kopac, and C. G. Grand 143
Cohalt Determination hy Colorimetric Method. C. P. Sideris.... 145
Coumarin Determination in Clover. W. L. Roherts and K. P. Link 438
Crystalline Profiles and Silhouettes, Angular Constants of. A. C. Shead 496
Density Determination by Falling-Drop Method. Seymore Hochherg and V. K. La Mer 291

Gas Analysis. IV. Nitrous Oxide and Methane. F. E. Blacet and D. H. Volman 44
Gas Analysis Method for Biological Studies. M. H. Seevers and R. T. Stormont 39
Gasometric Analysis with Dilatometer. Carbonate Radical. B. L. Clarke and H. W. Hermance 597
Glassware, Removal of Static Charges from. F. W. van Straten and W. F. Ehret 443
Halogen Determination:
Alkyl and Aryl. W. H. Rauscher 503
in Organic Compounds by Micro-, Semimicro-, and Macromethods. W. H. Rauscher 296
in Organic Compounds by Semimicro- and Micro-Carius Methods. R. H. Kimball, H. H. Wittenburg, and D. E. MacFadyen 48
Iodate Determination. V. J. Anhorn and H. Hunt 591
Iodine Determination by Elek-Hill Microbomb. Adalbert Elek and R. A. Harte 502
Kauri Butanol Test for Solvent Power. II. E. L. Baldeschwieler, M. D. Morgan, and W. J. Troeller 540
Lead:
Determination in Biological Material by Photometric Dithizone Method. D. M. Hubbard 493
Determination in Biological Materials. Comparison of Spectrographic, Dithizone, and Carbazide Methods. Jacob Cholak, D. M. Hubbard, R. R. McNary, and R. V. Story 488
Separation and Determination of Impurities in. I. Tin. B. L. Clarke, L. A. Wooten, and J. D. Struthers 349
Lubricating Oils, Viscosity Determination of. Harry Levin 147
Manganese Determination in Plants and Soil by Colorimetric Method. C. P. Sideris 445
Melilotic Acid Determination in Clover. W. L. Roberts and K. P. Link 438
Microgram Samples, Qualitative Analysis of. General Technic. A. A. Benedetti-Pichler 483
Nicotine Determination by Silicotungstic Acid Method. J. R. Spies 46
Nitro Group in Organic Compounds, Semimicro Test. W. M. Hearon and R. G. Gustavson 352
Nitrogen:
Analysis in Pyrimidines. D. F. Hayman and Sol Adler 197
Determination with Air-Free Carbon Dioxide. Fritz Breuer 354
Determination in Refractory Substances. J. R. Spies and T. H. Harris 304
Oxygen Determination in Organic Substances by Hydrogenation. W. R. Kirner 535
Paper as Medium for Analytical Reactions. I. Improvements in Spot Test Technic. B. L. Clarke and H. W. Hermance 292
Pigment Analysis in Fossae of Incisions of Chinese Oracle Bones. A. A. Benedetti-Pichler 149
Potassium Determination by Colorimetric Method. C. P. Sideris 145
Pycnometric Analysis, New Method in. W. W. Russell 592
Section on, Started in 1937 1
Selenium Group of Noyes and Bray Analyzed. A. A. Benedetti-Pichler and J. R. Rachele 589
Sulfate Determination by Volumetric Chromate Method. G. G. Manov and P. L. Kirk 198
Sulfur Determination:
in Hydrocarbons by Modified Lamp Method. Victor Zahn 543
in Organic Compounds. William Saschek 491
in Refined Kerosenes by Modified Lamp Method. Edward Field and F. H. Dempster 547
Zinc Determination by Spectrographic and Chemical Methods. L. H. Rogers and O. E. Gall 42
Mineral Oil. *See* Petroleum.
Moisture. *See* Water.
Molecular Distillation. *See* Distillation.
Morphine, Extraction of Minute Amounts with Pyrogallol. C. E. Morgan 383

2-NAPHTHYLAMINE Determination in Food Dyes. O. L. Evenson, J. A. Kime, and S. S. Forrest 74
Neoprene. *See* Rubber, Synthetic.
Neutralization, Diphenylguanidine as Standard in. W. M. Thornton, Jr., and C. L. Christ 339
Nickel Determination by Spot Test. Herman Yagoda 79
Nicotine Determination by Silicotungstic Acid Micromethod. J. R. Spies 46
Nitro Group in Organic Compounds, Semimicro Qualitative Test. W. M. Hearon and R. G. Gustavson 352
NITROGEN:
Determination in Presence of Carbon. C. T. Gayley 422
Determination in Water. N. W. Rakestraw and V. M. Emmel 344
Dumas Microdetermination:
with Air-Free Carbon Dioxide. Fritz Breuer 354
Carbon Dioxide Generator for. E. B. Hershberg and G. W. Wellwood 303
in Pyrimidines. D. F. Hayman and Sol Adler 197
in Refractory Substances. J. R. Spies and T. H. Harris 304
Storage of Carbon Dioxide from Dry Ice for. W. H. Hamill and J. A. Alicino 290
(*See also* Kjeldahl Method.)
Nitrous Acid, Aromatic Amines Titrated with. Joseph Phillips and Alexander Lowy 381
Nitrous Oxide in Gases, Microanalysis of. F. E. Blacet and D. H. Volman 44
Norris and Fay Method. *See* Selenium.
Noyes and Bray Selenium Group. *See* Selenium.

ODOR Concentration in Air-Conditioned Structures. Determination by Freezing-out and Osmoscope Method and Reduction by Activated Carbon. V. A. Gant and H. D. Shaw 16
Odor Determination in Water, Apparatus for. W. B. Hart 243
OILS:
Differentiation by Enzymic Hydrolysis. K. V. Giri and P. N. Bhargava 395
Fish:
Cod-Liver, Vitamin A Content of. Comparison of Spectrophotometric and Chemical Methods. A. D. Holmes, Francis Tripp, and G. H. Satterfield 456
Determination in Fish Flesh. M. E. Stansby and J. M. Lemon 341
Liver, Vitamin A Measurement by Photoelectric Method. R. L. McFarlan, J. W. Reddie, and E. C. Merrill 324
Lubricating. *See* Lubricating Oils.
Mineral. *See* Petroleum.
Sulfonated, Fractionation and Composition of. Ralph Hart 177
Tung, Determination of Eleostearic Acid in. P. S. Ku. (Correction, 588) 103
Wheat Germ, Biological Assay of Vitamin E in. L. S. Palmer 427
ORES:
Barite, Analysis of, Containing Calcium Fluoride. E. S. Hertzog 336
Chromite, Chromium Determination in. G. F. Smith and C. A. Getz 518
Iron Determination in, by Spectrophotometric Method. J. P. Mehlig 162
Lead-Zinc, Determination of Copper and Bismuth in. J. J. Lurie and L. B. Ginsburg 424
Mercury, Determination of Mercurous Chloride and Total Mercury in. J. J. Fahey 477
ORGANIC COMPOUNDS:
Elements in, Detection of. R. H. Baker and Charles Barkenbus 135
Halogen Determination in, by Micro-, Semimicro-, and Macromethods. W. H. Rauscher 296
Halogen Determination in, by Semimicro- and Micro-Carius Method. R. H. Kimball, H. H. Wittenburg, and D. E. MacFadyen 48
Nitro Group in, Semimicro Test for. W. M. Hearon and R. G. Gustavson 352
Oxygen Determination in, by Hydrogenation. Paul Goodloe and J. C. W. Frazer 223
Oxygen Microdetermination in, by Hydrogenation. W. R. Kirner 535
Sulfur Determination in. William Saschek 491
Organic Finishes. *See* Paint.
Osmium. *See* Platinum Metals.
Osmoscope Method. *See* Odor.
Oxidizing Agent. Sodium Chlorite in Volumetric Analysis. D. T. Jackson and J. L. Parsons. (Correspondence, G. R. Levi; Parsons, 250) 14
OXYGEN:
Determination in Organic Compounds by Hydrogenation. Paul Goodloe and J. C. W. Frazer 223
Determination of Small Quantities of, in Gases and Liquids. I. J. W. MacHattie and J. E. Maconachie 364
Microdetermination in Organic Substances by Hydrogenation. W. R. Kirner 535
Oxyquinone Derivative Solutions, Barium, Sulfur, and Sulfate Determinations by. S. J. Kochor 331
Ozonizer for Laboratory. W. Sheehan and W. Carmody 8

PAINT:
Organic Finishes, Distensibility Measurement of. A. E. Schuh and H. C. Theuerer 9
Test Films of Shellac and Other Finishes Produced Uniformly. P. F. Bruins 376
Thinners, Kauri Butanol Test for Solvent Power of. II. E. L. Baldeschwieler, M. D. Morgan, and W. J. Troeller 540
Vehicle Films, Preparation of, Free of Supporting Foundation. E. H. Bayor and L. Kampf 49
Palladium, Colloidal, in Reagent with Sodium Protalbinate for Hydrogen Determination in Gas Mixtures. D. T. Bonney with W. J. Huff 157
(*See also* Platinum Metals.)
Paper as Medium for Analytical Reactions. I. Improvements in Spot Test Technic. B. L. Clarke and H. W. Hermance 292
PARTICLE SIZE:
Average Diameter of Particles Just Passing 325-Mesh Sieve. S. S. Fritts 180
Distribution Measured by Optical Methods. H. E. Schweyer 211
of Rubber Pigments Measured. D. L. Gamble and C. E. Barnett 310
Perchloric Acid, Chromium Determination in Ferrochrome by Phosphoric Acid and Mixed Sulfuric and. G. F. Smith and C. A. Getz 378
Peroxide, Vanadium Determination by. E. R. Wright with M. G. Mellon 375
PETROLEUM:
Fractions, Light, Analysis of. S. S. Kurtz, Jr., and C. E. Headington 21
Fractions, Physical and Chemical Properties of. H. T. Rall. (Correction) 222
Insulating Oil, Chemical Changes Associated with Oxidation. R. N. Evans and J. E. Davenport 321
Mineral Oil Solutions, Arsenic Determination in. J. B. Lewis and E. L. Baldeschwieler 405
Oils, Phosphorus Determination in. Paul Goodloe 527
Products, Dark, Determining Aniline Point of. Leon Donn 202
(*See also* Asphalt, Distillation, Gasoline, Hydrocarbons, *and* Lubricating Oil.)
o-Phenanthroline Method for Iron Determination. L. G. Saywell and B. B. Cunningham 67
Phosphates, Determination of Primary, in Presence of Ortho. H. V. Tartar, I. S. Colman, and L. L. Kretchmar 384
Phosphoric Acid, Chromium Determined in Ferrochrome by, with Mixed Perchloric and Sulfuric Acids. G. F. Smith and C. A. Getz. 378
PHOSPHORUS:
Analysis of Crude Phosphorus and Sludges Containing Phosphorus. E. H. Brown, H. H. Morgan, and E. R. Rushton 524
Determination:
in Oils. Paul Goodloe 527
by Photoelectric Method. C. W. Eddy and Floyd DeEds 12
in Small Samples by Spectroscopic Method. D. T. Ewing, M. F. Wilson, and R. P. Hibbard 410
Interference in Fluorine Determination. H. V. Churchill, R. W. Bridges, and R. J. Rowley 222
Phosphotungstate Method for Vanadium. E. R. Wright with M. G. Mellon 251
PHOTOELECTRIC DETERMINATIONS:
Lead in Biological Material by Dithizone Method. D. M. Hubbard. 493
Phosphorus. C. W. Eddy and Floyd DeEds 12
Phosphorus in Oils. Paul Goodloe 527
Starch Gelatinization Temperature. D. H. Cook and J. H. Axtmayer 226
Sugars and Their Solutions Graded by Reflectance and Transmittancy. J. C. Keane and B. A. Brice 258

Vitamin A in Oils. R. L. McFarlan, J. W. Reddie, and E. C. Merrill ... 324
Piezometer Ring. C. P. Baker and A. J. Komich ... 533
Pigments, Microanalysis of, in Fossae of Incisions of Chinese Oracle Bones. A. A. Benedetti-Pichler ... 149
Pipet, Autobubbler. Milton Burton and T. W. Davis ... 139
PLANT MATERIAL:
Fiber, Crude, Apparatus for Determining. C. E. Weakley, Jr., and T. B. Leith ... 194
Manganese in, Colorimetric Microdetermination. C. P. Sideris ... 445
Respiratory Activity of. Determination of Carbon Dioxide in Air. J. G. Waugh ... 96
Sugar Determination in. W. Z. Hassid ... 228
Zinc Microdetermination in. L. H. Rogers and O. E. Gall ... 42
Plasticity Measurements at High Temperatures, Apparatus for. H. K. Griffin and H. H. Storch ... 280
PLATINUM:
Crucibles, Support for. W. M. Thornton, Jr. ... 95
Determination. S. O. Thompson, F. E. Beamish, and M. Scott ... 420
Determination, Spectrographic, by Constant-Pair Method. J. J. Manning and James Coull ... 28
Metals:
Analysis by Silver Assay Bead. F. E. Beamish and M. Scott ... 460
Detection of. S. O. Thompson, F. E. Beamish, and M. Scott ... 420
Gold Separation from. F. E. Beamish, J. J. Russell, and J. Seath ... 174
Osmium Determination in Presence of, by Lead Assay Button. J. J. Russell, F. E. Beamish, and J. Seath ... 475
Surface Effects on Silver Assay Beads. E. C. Forbes and F. E. Beamish ... 397
Pollucite. *See* Cesium Determination.
POTASSIUM:
Determination by Trisodium Cobaltinitrite. L. V. Wilcox ... 136
Determination in Small Samples by Spectroscopic Method. D. T. Ewing, M. F. Wilson, and R. P. Hibbard ... 410
Estimation in Silicates and Soils. J. E. Gieseking and H. J. Snider ... 232
Microdetermination by Colorimetric Method. C. P. Sideris ... 145
Potassium Dichromate, Glycerol Titration with, by Electrometric Method. Procter & Gamble Company, Chemical Division ... 514
Potassium Hydroxide, Ester Saponification by, in Diethylene Glycol. C. E. Redemann and H. J. Lucas ... 521
Potassium Permanganate, Arsenious Oxide in Standardization of. H. A. Bright ... 577
PRESSURE APPARATUS:
Manometer for Carbon and Hydrogen. W. H. Hamill ... 355
Manometer, Sloping. Milton Burton ... 335
Piezometer Ring. C. P. Baker and A. J. Komich ... 533
Regulator for Vacuum Distillation. R. L. Emerson and R. B. Woodward ... 347
n-Propylarsonic Acid, Zirconium Determination in Steels by. H. H. Geist and G. C. Chandlee ... 169
Protein Dialysis. F. W. Bernhart, L. E. Arnow, and A. C. Bratton ... 387
Protein Serum, Electrodialyzer for. D. B. Roxburgh and M. H. Power ... 578
Pulp, Moisture Determination in. A. J. Bailey ... 568
Pycnometer, Self-Filling. G. F. Hennion ... 479
Pycnometric Microanalysis, New Method in. W. W. Russell ... 592
Pyrimidines, Nitrogen in, Microanalysis of. D. F. Hayman and Sol Adler ... 197
Pyrogallol, Morphine Extraction with. C. E. Morgan ... 383

QUARTZ Determination in Presence of Silicates. W. R. Line and P. W. Aradine ... 60
Quinhydrone Electrode. *See* Electrodes.

RARE Earth Metals and Compounds. Thermal Analysis of Nitrate Mixtures. L. L. Quill, R. F. Robey, and Sam Seifter ... 389
Rare Earth Salts, Precipitation and pH Studies with Glass Electrode. J. A. C. Bowles and H. M. Partridge ... 124
Reductor, Wood's Metal as. G. F. Smith and C. S. Wilcox ... 419
Refractive Index of Strontium Nitrate. M. L. Yakowitz and P. S. Jorgensen ... 204
Refractometric Determination of Fat in Chocolate. Joseph Stanley ... 132
Refractory Materials, Nitrogen Determination in. J. R. Spies and T. H. Harris ... 304
Resins, Alkyd. Glycerol and Ethylene Glycol Determination in Dilute Aqueous Solution. A. G. Hovey and T. S. Hodgins ... 509
Respiration Activity of Leaves. Carbon Dioxide Determination in Air. J. G. Waugh ... 96
Respiration. Carbon Monoxide Determination in Air. A. A. Christman, W. D. Block, and Julius Schultz ... 153
Rhodium. *See* Platinum Metals.
Riboflavin. *See* Vitamin B_2.
Rosin Saponification Number, Influence of Solvent on. W. C. Smith ... 469
Rosin, Unsaponifiable Matter in, Determination of. I. E. Knapp ... 315
Rotenone. *See* Insecticides.
RUBBER:
Carbon Black Determination in. E. W. Oldham and J. G. Harrison, Jr. ... 278
Diarylamine Determination in. David Craig ... 56
Films, Thin, Preparation of. T. P. Sager ... 156
Flexometer, Goodrich. E. T. Lessig ... 582
Latex:
Examination. II. Chemical Testing Methods. D. E. Fowler ... 63
Examination of, and of Compounds of. I. Physical Testing Methods. H. F. Jordan, P. D. Brass, and C. P. Roe ... 182
Testing Procedure, Physical. L. A. Wohler ... 117
Pigments. Particle Size and Size Distribution Measurements by Scattering in the Near Infrared. D. L. Gamble and C. E. Barnett ... 310
Sulfur Determination in, by Tetrahydroxyquinone as Titration Indicator. R. T. Sheen, H. L. Kahler, and D. C. Cline ... 69
Synthetic. Neoprene as Vibration Absorber. F. L. Yerzley ... 392
Testing by Impact Machine. G. J. Albertoni ... 30
Tires. Testing Tread Compounds by Air-Bomb Aging. E. W. Booth and D. J. Beaver ... 18
as Vibration Absorber. F. L. Yerzley ... 392
Vulcanization, Zinc Oxide Curing Rate in, T-50 Test for. G. S. Haslam and C. A. Klaman ... 552

SALT. *See* Sodium Chloride.
Salt Bridge for Electrometric Measurements. W. M. Bright and E. L. Miller ... 346
Sawdust. *See* Wood.

SELENIUM:
Determination, Qualitative. H. A. Ljung ... 328
Determination Volumetrically by Norris and Fay Method. W. C. Coleman and C. R. McCrosky ... 431
Group of Noyes and Bray, Microanalysis of. A. A. Benedetti-Pichler and J. R. Rachele ... 589
Separation from Gold and Tellurium. J. Seath and F. E. Beamish ... 373
Serum Protein. *See* Protein.
Shellac Test Films, Uniform, Production of. P. F. Bruins ... 376
Silicate, Determination of Quartz in Presence of. W. R. Line and P. W. Aradine ... 60
Silicate, Estimation of Potassium in. J. E. Gieseking and H. J. Snider ... 232
Silicate Rocks, Copper, Zinc, and Lead Determination in. E. B. Sandell ... 464
Silicon Determination in Aluminum and Aluminum Alloys. H. V. Churchill, R. W. Bridges, and M. F. Lee. (Correspondence, L. H. Callendar; Churchill, Bridges, and Lee, 533) ... 201
Silicotungstic Acid Micromethod for Determining Nicotine. J. R. Spies ... 46
SILVER:
Assay Bead for Analysis of Platinum Metals. F. E. Beamish and M. Scott ... 460
Assay Beads, Surface Effects of Platinum Metals on. E. C. Forbes and F. E. Beamish ... 397
Determination by Electrometric Method. H. Robinson and H. Hugg ... 565
Determination by Recovery of Minute Amounts from Solution. W. E. Caldwell and K. N. McLeod ... 530
Siphon Starting Device. T. W. Chandler ... 249
Soap Analysis and Sampling, Revised Standard Methods. F. W. Smither, R. E. Divine, C. P. Long, M. L. Sheely, H. P. Trevithick, and P. H. Walker ... 2
Soap. Glycerol Titration with Dichromate by Electrometric Method. Procter & Gamble Company, Chemical Division ... 514
Sodium Amalgam with Zinc, Analysis of. H. A. Liebhafsky ... 176
Sodium Determination by Uranyl Zinc Acetate Method. Removal of Phosphorus. O. R. Overman and O. F. Garrett ... 72
Sodium Acetate Analysis. C. B. Hurd and William Fiedler, Jr. ... 116
Sodium Carbonate, Anhydrous, as Reference Standard in Acidimetry. G. F. Smith and G. F. Croad ... 141
Sodium Chloride of High Purity, Determination of Sulfate, Calcium, and Magnesium in. A. C. Shuman and N. E. Berry ... 77
Sodium Chlorite as Volumetric Oxidizing Agent. D. T. Jackson and J. L. Parsons. (Correspondence, G. R. Levi; Parsons, 250) ... 14
SODIUM HYDROXIDE:
Carbonate Content of Oil Lye. J. E. S. Han ... 140
Concentration Determined by Baumé Hydrometer Correction Table. John Griswold ... 388
Ester Saponification by, in Diethylene Glycol. C. E. Redemann and H. J. Lucas ... 521
Sulfur Content Estimated. Gustave Heinemann and H. W. Rahn ... 458
Sodium Protalbinate–Palladium Reagent for Hydrogen Determination in Gas Mixtures. D. T. Bonney with W. J. Huff ... 157
Sodium Thiosulfate, Stability of. V. K. La Mer and H. M. Tomlinson ... 588
Soil, Manganese in, Colorimetric Microdetermination. C. P. Sideris ... 445
Soil, Potassium in, Estimation of. J. E. Gieseking and H. J. Snider ... 232
Solvent Power, Kauri Butanol Microtest for. II. E. L. Baldeschwieler, M. D. Morgan, and W. J. Troeller ... 540
SPECTRUM ANALYSES:
Bismuth in Biological Material. Jacob Cholak ... 26
Boron Determination. R. K. Calfee and J. S. McHargue ... 288
Carotenoids in Yellow Corn. G. L. Clark and J. L. Gring ... 271
in Colorimetry. M. G. Mellon ... 51
Iron in Ores. J. P. Mehlig ... 162
Lead in Biological Materials. Jacob Cholak, D. M. Hubbard, R. R. McNary, and R. V. Story ... 488
Metal in Small Samples. Calcium, Magnesium, Potassium, Manganese, Iron, and Phosphorus. D. T. Ewing, M. F. Wilson, and R. P. Hibbard ... 410
Particle Size and Size Distribution Measured by Scattering in the Near Infrared. D. L. Gamble and C. E. Barnett ... 310
Platinum Determination by Constant-Pair Method. J. J. Manning and James Coull ... 28
Quantitative, Logarithmic Sector Method in. H. A. Wilhelm ... 170
Vanadium by Peroxide Method. E. R. Wright with M. G. Mellon ... 375
Vanadium by Phosphotungstate Method. E. R. Wright with M. G. Mellon ... 251
Vitamin A Content of Cod Liver Oil. A. D. Holmes, Francis Tripp, and G. H. Satterfield ... 456
Zinc in Plants by Micromethod. L. H. Rogers and O. E. Gall ... 42
Spot Test, Confined, Applications in Analytical Chemistry. Herman Yagoda ... 79
Spot Test Technic Improved. Paper as Medium for Analytical Reactions. I. B. L. Clarke and H. W. Hermance ... 292
Starch Gelatinizing Temperature, Photoelectric Method for Determining. D. H. Cook and J. H. Axtmayer ... 226
Steel, Zirconium Determination in, with *n*-Propylarsonic Acid. H. H. Geist and G. C. Chandlee ... 169
STIRRERS:
Circulator, Noncorrodible, for Liquids. K. A. Freeman and P. J. Thompson ... 532
Gas-Tight, for Pasty Materials in Laboratory. A. H. Maude ... 196
Mercury Seal for. L. H. Briggs ... 168
Sealed. Lionel Joseph ... 212
Strontium Nitrate, Refractive Index Determination. M. L. Yakowitz and P. S. Jorgensen ... 204
SUGAR:
Analysis, Iodometric, Effect of Time on. H. S. Miller ... 37
Determination in Plants. W. Z. Hassid ... 228
Products, Determination of Ash Content by Sulfated Ash Method. R. Valdez and F. Camps-Campins ... 35
Products, Turbidity in. V. Color and Turbidity of Hard Refined Sugars. F. W. Zerban and Louis Sattler ... 229
Raw, Absolute Turbidity of. F. W. Zerban and Louis Sattler ... 455
Reducing, Electric Heater for Lane and Eynon Titration of. D. T. Englis and E. G. Lynn ... 314
White, and Sugar Solutions, Photoelectric Grading by Reflectance and Transmittancy. J. C. Keane and B. A. Brice ... 258
SULFATE DETERMINATION:
Areametric, as Barium Sulfate. V. R. Damerell and P. Spremulli ... 123
by Microvolumetric Chromate Method. G. G. Manov and P. L. Kirk ... 198
in Salt of High Purity. A. C. Shuman and N. E. Berry ... 77
Volumetric. S. J. Kochor ... 331

Sulfonated Oils. *See* Oils.
SULFUR:
Determination, Volumetric. S. J. Kocbor 331
Microdetermination:
in Hydrocarbons by Modified Lamp Metbod. Victor Zabn 543
in Organic Compounds. William Saschek 491
in Refined Kerosenes by Modified Lamp Method. Edward Field and F. H. Dempster 547
Reducible, Estimation of, in Sodium Hydroxide. Gustave Heinemann and H. W. Rahn 458
Sulfuric Acid, Chromium Determination in Ferrocbrome by Pbosphoric Acid with Mixed Perchloric and. G. F. Smitb and C. A. Getz 378
Sulfuric Acid, Hydrocarbon Oil, Graphic Analysis by Extraction witb. C. H. Fisher and Abner Eisner 366

TAR Acids and Bases, Determination by Extraction Metbods. C. H. Fisber and Abner Eisner 213
Tartrates, Beryllium Separation in Presence of. H. S. Miller 221
Tellurium Separation from Gold and Selenium. J. Seath and F. E. Beamisb 373
Tbermoregulator. *See* Heat Apparatus.
Tborium Nitrate, Fluorine Titration in Aqueous Solutions by. R. J. Rowley and H. V. Churchill 551
Tin as Impurity in Lead, Separation and Determination of. B. L. Clarke, L. A. Wooten, and J. D. Struthers 349
Tires. *See* Rubber Tires.
TITRATION:
of Acids in Oxidized Petroleum Oils by Electrometric Metbod. A. R. Rescorla, F. L. Carnahan, and M. R. Fenske 505
of Amines, Aromatic, with Nitrous Acid. Josepb Phillips and Alexander Lowy 381
Flask for Determining Saponification Value of Aspbalts and Aspbaltic Oils. J. E. Fratis and D. H. Condit 576
of Fluorine, in Aqueous Solutions by Thorium Nitrate. R. J. Rowley and H. V. Churchill 551
of Glycerol witb Dichromate by Electrometric Metbod. Procter & Gamble Company, Chemical Division 514
Tobacco Moisture Content, Determination of. R. M. Cone and L. H. Davis 219
o-Toluidine Determination in Food Dyes. O. L. Evenson, J. A. Kime, and S. S. Forrest 74
Transformer, Auto-, witb Variable Voltage. D. H. Cook 248
Trisodium Cobaltinitrite, Potassium Determination by. L. V. Wilcox. 136
Tung Oil. *See* Oils.
Turbidimetry. Particle-Size Distribution Measured by Optical Methods. H. E. Scbweyer 211

URANYL Zinc Acetate Method for Sodium Determination. O. R. Overman and O. F. Garrett 72
Urea, Aluminum Determination by Precipitation with. H. H. Willard and N. K. Tang 357

VANADIUM Determination by Peroxide Metbod. E. R. Wrigbt witb M. G. Mellon 375
Vanadium Determination by Phospbotungstate Metbod. E. R. Wrigbt with M. G. Mellon 251
Vanilla Extract, Coumarin Determination in. I. J. Duncan and R. B. Dustman 416
Vapor Pressure, Low, Apparatus for Direct Determination of. K. C. D. Hickman, J. C. Hecker, and N. D. Embree 264
Varnisb. *See* Paint.
Viscosity Measurement by Suspended Level. Leo Ubbelobde. (Correction, 418) 85
VITAMINS:
A in Cod Liver Oil. Comparison of Spectropbotometric and Chemical Metbods. A. D. Holmes, Francis Tripp, and G. H. Satterfield 456
A in Oils Measured by Photoelectric Metbod. R. L. McFarlan, J. W. Reddie, and E. C. Merrill 324
B_2 (Riboflavin or Lactoflavin), Estimation by Fluorescent Method. S. M. Weisberg and I. Levin 523
E, Biological Assay of. Application to Wheat Germ and Wheat Germ Oil. L. S. Palmer 427

WASTE. *See* Farm Waste.
WATER:
Boiler Compound, Feeding Device for. J. L. Smith 330
Boiler Foaming and Priming, Electrometric Measurement of. Richard Ulmer 172
Moisture Determination by Distillation. H. N. Calderwood and R. J. Piecbowski 520
Moisture Tester, Rapid. Egbert Freyer 434
Odor Determination in, Apparatus for. W. B. Hart 243
Sea, Nitrogen Determination in. N. W. Rakestraw and V. M. Emmel 344
Weigbts, Calibration of. F. H. Hurley, Jr. 239
Wheat Germ, Biological Assay of Vitamin E from. L. S. Palmer 427
Whisky. *See* Beverages, Alcobolic.
Wbite Metals. *See* Metals.
Wine. *See* Beverages, Alcoholic.
Wood Chips, Sawdust, and Pulp, Moisture Determination in. A. J. Bailey 568
Wood Pretreatment witb Hot Dilute Acid. Effect on Lignin Values. W. E. Cohen and E. E. Harris 234
Wood's Metal. *See* Alloys.

ZINC:
Amalgam witb Sodium, Analysis of. H. A. Liebbafsky 176
Determination in Silicate Rocks. E. B. Sandell 464
Electrodeposition from Acid Citrate Solutions. R. Winchester and L. F. Yntema 254
Estimation in Small Amounts by Ditbizone Metbod. P. L. Hibbard 127
Microdetermination in Plants by Spectrographic and Chemical Methods. L. H. Rogers and O. E. Gall 42
Ores of Lead and, Determination of Copper and Bismutb in. J. J. Lurie and L. B. Ginsburg 424
Zinc Oxides in Rubber Compounds, T-50 Test for. G. S. Haslam and C. A. Klaman 552
Zirconium Determination by Arsenate Metbod. W. C. Schumb and E. J. Nolan. (Addendum, 562) 371
Zirconium Determination in Steels witb *n*-Propylarsonic Acid. H. H. Geist and G. C. Chandlee 169

540.5 J 82511

Industrial & engineering

PISL-14

COMMONWEALTH OF PENNSYLVANIA
DEPARTMENT OF PUBLIC INSTRUCTION
STATE LIBRARY
HARRISBURG

540.5 J 82511

In case of failure to return the books the borrower agrees to pay the original price of the same, or to replace them with other copies. The last borrower is held responsible for any mutilation.

Return this book on or before the last date stamped below. 303498

Oct22'41			
Oct20'44			
[illegible]			
Oct30'53			